This is a digital copy of a book that was preserved for generations on library shelves before it was carefully scanned by Google as part of a project to make the world's books discoverable online.

It has survived long enough for the copyright to expire and the book to enter the public domain. A public domain book is one that was never subject to copyright or whose legal copyright term has expired. Whether a book is in the public domain may vary country to country. Public domain books are our gateways to the past, representing a wealth of history, culture and knowledge that's often difficult to discover.

Marks, notations and other marginalia present in the original volume will appear in this file - a reminder of this book's long journey from the publisher to a library and finally to you.

Usage guidelines

Google is proud to partner with libraries to digitize public domain materials and make them widely accessible. Public domain books belong to the public and we are merely their custodians. Nevertheless, this work is expensive, so in order to keep providing this resource, we have taken steps to prevent abuse by commercial parties, including placing technical restrictions on automated querying.

We also ask that you:

+ *Make non-commercial use of the files* We designed Google Book Search for use by individuals, and we request that you use these files for personal, non-commercial purposes.
+ *Refrain from automated querying* Do not send automated queries of any sort to Google's system: If you are conducting research on machine translation, optical character recognition or other areas where access to a large amount of text is helpful, please contact us. We encourage the use of public domain materials for these purposes and may be able to help.
+ *Maintain attribution* The Google "watermark" you see on each file is essential for informing people about this project and helping them find additional materials through Google Book Search. Please do not remove it.
+ *Keep it legal* Whatever your use, remember that you are responsible for ensuring that what you are doing is legal. Do not assume that just because we believe a book is in the public domain for users in the United States, that the work is also in the public domain for users in other countries. Whether a book is still in copyright varies from country to country, and we can't offer guidance on whether any specific use of any specific book is allowed. Please do not assume that a book's appearance in Google Book Search means it can be used in any manner anywhere in the world. Copyright infringement liability can be quite severe.

About Google Book Search

Google's mission is to organize the world's information and to make it universally accessible and useful. Google Book Search helps readers discover the world's books while helping authors and publishers reach new audiences. You can search through the full text of this book on the web at `http://books.google.com/`

Law Library
Univ. of Calif.
Berkeley

ALL MATERIAL NONCIRCULATING

CALL NUMBER	VOLUME	COPY
	96	COPY 3

AUTHOR

TITLE

NORTHWESTERN REPORTER

NAME AND ADDRESS

COPY 3.

Digitized by Google

READING
PA

Digitized by Google

Digitized by Google

Digitized by Google

Digitized by Google

National Reporter System.—State Series.

THE

NORTHWESTERN REPORTER

VOLUME 96,

CONTAINING

ALL THE DECISIONS OF THE SUPREME COURTS

OF

MINNESOTA, WISCONSIN, IOWA, MICHIGAN, NEBRASKA, NORTH DAKOTA, SOUTH DAKOTA.

PERMANENT EDITION.

AUGUST 11—NOVEMBER 24, 1903.

WITH TABLE OF NORTHWESTERN CASES IN WHICH REHEARINGS HAVE BEEN DENIED.

WITH TABLES OF NORTHWESTERN CASES PUBLISHED IN VOLS. 117, IOWA REPORTS; 129, MICHIGAN REPORTS; 87, MINNESOTA REPORTS; 11, NORTH DAKOTA REPORTS; 115, WISCONSIN REPORTS.

ALSO, ADDITIONAL TABLES FOR VOLS. 117, IOWA REPORTS; 129, MICHIGAN REPORTS; 87, MINNESOTA REPORTS; 11, NORTH DAKOTA REPORTS; 115, WISCONSIN REPORTS.

A TABLE OF STATUTES CONSTRUED IS GIVEN IN THE INDEX.

ST. PAUL:
WEST PUBLISHING CO.
1903.

Digitized by Google

Law Library

COPYRIGHT, 1903,
BY
WEST PUBLISHING COMPANY.

Digitized by Google

C. 3

JUDGES

OF THE

COURTS REPORTED DURING THE PERIOD COVERED BY THIS VOLUME.

IOWA—Supreme Court.

CHARLES A. BISHOP, CHIEF JUSTICE.

JUDGES.

H. E. DEEMER. EMLIN McCLAIN.
J. C. SHERWIN. S. M. WEAVER.
SCOTT M. LADD.

MICHIGAN—Supreme Court.

FRANK A. HOOKER, CHIEF JUSTICE.

ASSOCIATE JUSTICES.

JOSEPH B. MOORE. CLAUDIUS B. GRANT.
WILLIAM L. CARPENTER. ROBERT M. MONTGOMERY.

MINNESOTA—Supreme Court.

CHARLES M. START, CHIEF JUSTICE.

ASSOCIATE JUSTICES.

LOREN W. COLLINS. JOHN A. LOVELY.
CALVIN L. BROWN. CHARLES L. LEWIS.

NEBRASKA—Supreme Court.

J. J. SULLIVAN, CHIEF JUSTICE.

JUDGES.

SILAS A. HOLCOMB. SAMUEL H. SEDGWICK.

SUPREME COURT COMMISSIONERS.

Department No. 1.

WILLIAM G. HASTINGS. JOHN H. AMES.
WILLIS D. OLDHAM.

Department No. 2.

JOHN B. BARNES. I. L. ALBERT.
R. C. GLANVILLE.

Department No. 3.

EDWARD R. DUFFIE. JOHN S. KIRKPATRICK.
ROSCOE POUND.

Digitized by Google

NORTH DAKOTA—Supreme Court.

N. C. YOUNG, Chief Justice.

ASSOCIATE JUSTICES.

D. E. MORGAN. JOHN M. COCHRANE.

SOUTH DAKOTA—Supreme Court.

DICK HANEY, Presiding Judge.

JUDGES.

HOWARD G. FULLER. DIGHTON CORSON.

WISCONSIN—Supreme Court.

JOHN B. CASSODAY, Ex Officio Chief Justice.

JUSTICES.

JOHN B. WINSLOW. JOSHUA ERIC DODGE.
ROUJET D. MARSHALL. ROBERT G. SIEBECKER.

Digitized by Google

COURT RULES.

SUPREME COURT OF NEBRASKA.*

September Term, 1903.

1. [Sittings of the court.]—The regular public sessions of this court will be held on the first and third Tuesdays of each month at 9 o'clock a. m., standard time, during each term.

2. Section 1. [Submission of causes.]—Causes will be taken up and heard in their order on the docket. Any cause may, however, be submitted upon the written stipulation of the parties thereto providing for such submission on printed briefs accompanied by or containing an agreed printed abstract of the record and evidence upon which the case is to be determined. Whenever a cause is reached and the brief of the party having the affirmative is not on file the judgment will be affirmed or the proceeding dismissed. When default has been made by the other party and there is due proof of service of summons in error and the briefs of the party holding the affirmative are on file with proof of service thereof within the time provided by rule 9, he may proceed ex parte. But if the briefs shall be served or filed out of time, although without leave of court, the irregularity shall be deemed waived if no objection be made on that ground at the time of service, if the delay be in that respect, or, if the delay be merely in filing, within thirty days thereafter, or if the adverse party serve and file briefs in answer. The hearing of no cause shall, however, be delayed by default of either party in serving or filing briefs. To avoid such result the case will be disposed of as if the delinquent party's brief had not been served; provided, that the court may under special circumstances and on suitable terms otherwise order.

2. Sec. 2. [Same.]—Criminal cases will stand advanced for hearing without motion. The court will, on motion, which motion shall be submitted without argument, advance for hearing cases which have once or more already been regularly upon the docket of the court and which were not on such former occasion dismissed on motion of the party seeking the advancement. A confession of error shall be deemed equivalent to a dismissal on motion of the party confessing error. The court will likewise advance cases within the original concurrent jurisdiction of this court, which have been prosecuted in the district court and brought to this court by appellate proceedings. The court may also in its discretion advance other cases if they involve questions of public interest; but this power will not be exercised except in cases of grave import and serious urgency.

3. [Order of hearing.]—The court, in advance, shall, by order, designate what cases shall be submitted and when, having reference to the order of time in which such cases were originally docketed. Advanced cases and cases in which rehearings shall have been granted will be placed on the call for the sitting of court next following the expiration of the time for serving briefs as provided by the rules.

4. [Criminal cases—Second transcript unnecessary.]—Whenever, in a criminal case, a writ of error shall be issued upon a certified transcript of a record, no further transcript shall be required or allowed to be taxed in the bill of costs, but the same transcript shall be returned with the writ, and shall be deemed sufficient, unless diminution or other objection thereto be suggested.

5. [Time for oral argument.]—In the oral argument of a cause, the time allowed the parties on each side shall not exceed thirty minutes, unless for special reasons the court shall extend the time. Oral arguments on a motion will be limited to five minutes on a side.

6. [Notice of motions.]—Every application for an order in any case shall be in writing, and except as to motions for rehearing, shall be granted only upon the filing thereof at least two days before the hearing, and due proof of service of notice on the adverse party or his attorneys, at least three days before the hearing, which, in all cases, must be fixed for one of the session days provided for by rule 1, to-wit: the first or third Tuesday of any month during term time. The notice herein provided for shall conform to the provisions of section 574 of the Code of Civil Procedure, and may be served by a bailiff of this court, or by any sheriff or constable in this state, or by any disinterested person; in the latter case, however, the return must

*For rules 1-32, as originally adopted, and amendments thereto, see 65 N. W. v, and 83 N. W. v.

Digitized by Google

be under oath. Fees for service of said notice shall be allowed and taxed as for the service of summons in proper cases.

7. [Motions for rehearing.]—A motion for rehearing may be filed as of course at any time within forty days from the filing of the opinion or rendition of the judgment of the court in the case. Such motion must specify distinctly the grounds upon which it is based, and must be accompanied by a separate printed brief.

8. [Mandates.]—No mandate shall issue in any civil case during the time allowed for the filing of a motion for rehearing, or pending the consideration thereof, unless specially ordered by the court.

9. [Briefs.]—Within thirty days after the docketing of a cause in this court, and within the same time after a rehearing shall have been allowed, the party holding the affirmative shall furnish a printed brief of his points and citations in support thereof, to the opposite party or his attorneys of record, by whom in turn a like brief in reply shall be served within thirty days after service of the first required brief, or, if none such shall have been served, then within thirty days after the expiration of the time allowed the party holding the affirmative the other party may serve such brief. Forthwith after service thereof on the adverse party, each party shall file with the clerk of this court ten printed copies of the brief which he has furnished the opposite party or his attorney of record, with proof of service thereof. Each brief shall by number designate the several pages of the record containing matter bearing upon the questions discussed in such brief. Every reference to an adjudicated case shall be by the title thereof, as well as by the volume and page where it may be found, and the particular edition of any textbook referred to must be given in connection with the cited page or section thereof.

10. [Briefs—How printed.]—All briefs shall be printed on good book paper, small pica type, leaded lines; the printed page to be four inches wide and seven inches long, with a margin of two inches; but the type in which extracts are printed may be small pica solid or brevier leaded. The heading of each brief shall show the title of the cause, the court from which the cause was brought, and the names of counsel for both parties.

11. [Costs.]—When the parties or their attorneys shall furnish their printed briefs in conformity to the rules of this court, or briefs and printed abstracts under stipulation for submission as provided for in rule 2, it shall be the duty of the clerk to tax a printer's fee at the rate of one dollar for every five hundred words embraced in a single copy of the same, against the unsuccessful party not furnishing the same, to be collected and paid to the successful party as other costs. When unnecessary costs have been made by either party the court will, upon application, order the same taxed to the party making them, without reference to the disposition of the case.

12. [Security for costs.]—In each case brought to this court the plaintiff in error, appellant, or relator shall, before the entry of the same upon the docket, give security for costs by filing a bond in the sum of $50, with one or more sureties, conditioned for the payment of the costs of this court, which bond, in cases brought on error or appeal, must be approved by the clerk of this court. The obligation of the surety shall be complete, simply by endorsing the summons in error or notice of appeal or by the execution of a formal bond for costs, and such surety shall be bound for the payment of all costs which may be adjudged against the plaintiff in error, appellant, or relator, whether either of them obtain judgment or not, and after final judgment this court on motion of the defendant in error, appellee, or respondent, or any other person having a right to such costs, or any part thereof, after ten days' notice of such motion may enter up judgment in the name of the defendant in error, appellee, or the respondent or the legal representative of either, against the surety for costs, his executors, or administrators for the amount of the costs adjudged against the plaintiff in error, the appellant, or the relator or so much thereof as may remain unpaid, and for accruing costs. Execution may be issued on such judgment, as in other cases, for the use and benefit of the persons entitled to such costs. But these provisions shall not apply in causes where a bond or undertaking has been filed in the court below, in accordance with the provisions of sections 588 and 677 of the Code of Civil Procedure, where such bond is conditioned to pay costs, but in such causes the transcript filed must show the giving of such bond or undertaking, with the names of the sureties thereon; nor shall it apply in criminal cases where an affidavit of poverty is filed, as allowed by section 508, Criminal Code. Besides the security for costs above required to be given when a cause is docketed, the party docketing such cause shall deposit with the clerk $10 to cover clerk's costs that may be made by such party in the cause; and if the deposit shall at any time be exhausted by the party making the same, the clerk may from time to time require such party to deposit a further sum of $5. Upon the termination of a cause any sum remaining from such deposit not applicable to clerk's costs incurred by the party making the deposits shall be returned to him.

13. [Capital cases—Suspension of sentence.]—In all criminal cases brought on error to this court, where it appears that the court below has passed sentence of death upon the plaintiff in error, it is ordered that the sentence and judgment be suspended until the

Digitized by Google

further order of this court, and it shall be the duty of the clerk to endorse such suspension upon the transcript filed in said cause and immediately transmit a certified copy thereof to the officer charged with the execution of said sentence.

14. [Trials in original cases.]—Whenever an issue of fact is presented for trial in an original action or proceeding, a commission will be named composed of two resident electors of the state, of different political affiliations, who shall, under the direction of the court, select such number of persons having the qualifications of jurors in the district court as may be designated in the order of their appointment. A venire for the jurors so selected will be issued by the clerk, directed to the bailiffs of this court or any sheriff or sheriffs of the state, and shall be served in the manner prescribed for the service of summons. Said commissioners before entering upon the duties of their office shall take and subscribe to the oath prescribed by section 1 of chapter 10 of the Compiled Statutes.

15. [Same.]—Each party shall be entitled to three peremptory challenges, and challenges for cause may be made by either party, the validity of which shall be determined by the court. If, from challenges or other cause, the panel shall not be full, the court may order the bailiff to fill the same from bystanders or neighboring citizens having the qualifications of electors.

16. [Same.]—The jurors summoned or called as above provided, or such of them as are not set aside or challenged as will make up the number of twelve, shall constitute the jury for the trial of said issue of fact.

17. [Same.]—Each juror shall be entitled to the same compensation and mileage as are provided by law for jurors in civil cases in the district court.

18. [Syllabus of the points decided.]—A syllabus of the points decided in each case shall be stated in writing by the judge or commissioner preparing the opinion, and such syllabus and opinion shall be examined and approved by the court before the same shall be reported.

19. [Records not to be removed.]—The clerk of the court is answerable for all records and papers belonging to his office, and they shall not be taken from his custody unless by special order of the court, or a judge or commissioner thereof, but the parties may have copies when desired by paying the clerk therefor.

20. [Mandamus—Notice.]—In all cases of application to this court for a writ of mandamus, a reasonable notice must be given to the respondent of the time when it will be made, accompanied by a copy of the affidavit on which it is based, unless for special reasons it is otherwise ordered.

21. [Admission of attorneys—Time of examination.]—Examinations of applicants for admission to the bar will be held on the second Tuesday of June and on the third Tuesday of November each year.

22. [Same—Application and showing—Certificate of sponsors.]—Each applicant for admission shall, at least four weeks before the day set for examinations, file with the clerk of this court a written request, in his own handwriting and subscribed by himself, for admission, together with his personal affidavit as to his age, residence and time and place of study, or admission and period of practice in courts of record in another state or a territory, and the certificate or affidavit of at least two citizens of good standing in the community where the applicant resides, or formerly resided, that they are well acquainted with him and that he is of good reputation in that community and that they believe him to be of good moral character.

23. [Same—Admission on examination—Showing by applicant and preceptor—Educational qualifications—Reputable law school.]—Each applicant for admission upon examination shall also show by his own affidavit and by the affidavit or certificate of his preceptor that the applicant has regularly and attentively studied law under such preceptor's personal supervision and direction and in his office for at least two years; provided, that after the 1st day of July, 1904, every such applicant shall in addition to making the showing set out in rule 22, make proof by his own affidavit, and by the affidavit or certificate of his preceptor or preceptors that he has regularly and attentively studied law under his or their personal direction or supervision in a reputable law school or in the office of a practicing attorney, or partly in such school and partly in such office, for a period of at least three years, at least one year of which office study shall have been passed in a law office in this state; provided, also that each applicant shall prove either by school, college or teacher's certificate or diploma, or in examination before the bar commission, that he has had preliminary education, other than legal, equivalent to that involved in the completion of the first three years of a high school course accredited by the state Department of Public Instruction. A reputable law school within the meaning of the act for admission to the bar is one having a three years course of study of not less than thirty-four weeks a year and actually requiring for admission to regular class standing a preliminary education equivalent to a Nebraska High School course of three years, and requiring of each regular class day recitation averaging at least ten hours a week. If it be shown by the affidavit of the applicant that his preceptor is dead, or that for other satisfactory reasons his certificate cannot be obtained, there may be substituted therefor the certificate of any mem-

Digitized by Google

ber in good standing of the bar of the county in which the applicant pursued his studies, and who may be personally cognizant of the facts.

24. [Same—Other proof of character and qualifications of applicant.]—None of the facts required for qualifying an applicant for admission shall be conclusively established by the foregoing proof, but the applicant shall in his application give the names and addresses of at least three (3) persons other than those whose certificates he presents, of whom inquiry can be made in regard to the applicant's character and other qualifications.

25. [Same—Payment and disbursement of fees.]—The applicant shall also, with his application, deposit with the clerk the sum of five ($5.00) dollars. The clerk shall enter all sums so received in a book or account kept for that purpose, showing date and name of applicant, and shall pay the same out on order of the Chief Justice, in payment of the expenses of such examination, and for no other purpose; that is to say, the cost of necessary printing and stationery; to the clerk for each oath and certificate of admission issued to an applicant, one dollar and fifty cents; to each member of the commission conducting the examination, his necessary traveling expenses, and for personal expenses while actually engaged in the performance of his duties, not exceeding five dollars per day.

26. [Same—Admission from another state or a territory.]—Any practicing attorney in the courts of record of another state or a territory, having professional business in either the supreme or district courts of this state, may, on motion to such court, be admitted for the purpose of transacting such business, upon taking the required oath. Any such attorney desiring to be admitted to practice generally in the courts of this state must make his application as required by these rules and present proof by satisfactory certificate that he is a licensed practitioner in a court of record of another state or a territory where the requirements for admission when he was admitted were equal to those prescribed in this state, or, that he has practiced law five full years under license in any state or territory.

27. [Same—Registration at commencement of study—Form—Failure to register—Change of preceptor—Fee.]—The clerk of this court shall keep a register in which subsequent to July 1, 1904, every person applying for admission upon examination as having studied in the office of a practicing attorney in this state, must have registered at the beginning of his term of study, unless good cause, other than ignorance of this rule, satisfactory to the commission, be shown to the contrary. Such register shall disclose the name of the student, his residence and the name and address of the attorney in whose office he is studying. The application for registration shall be in writing and may be formal or informal. In case of change of preceptor or removal from one office to another, such change must be notified to the clerk, who will note it on the register. The clerk may require a fee of fifty cents from every applicant registered.

28. [Same — Commission — Appointment—Duties.]—The court will, on or before the opening of the September term in each year, appoint a commission composed of five (5) persons, learned in law, to conduct examinations for the ensuing year. The commission so appointed shall, prior to the examinations, examine the proofs of qualifications filed in accordance with the foregoing rules, and may make such further investigation as to the qualifications of any applicant as it shall deem expedient. On the day appointed it shall commence the examination of applicants. The method of conducting the examinations shall be left to the discretion of the commission, it being expected that the commission will, in the conduct of such examinations, and in the investigation of the qualifications of applicants, take care that no person shall be recommended for admission who has not in all particulars shown himself to be well qualified. Oral examinations shall be reported by the stenographer of this court.

29. [Same—Report.]—As soon as practicable after the conclusion of the examination, the commission shall make a written report to the court of its conclusions, and all persons who shall be recommended for admission by a majority of the commissioners shall thereupon be admitted to practice, on taking the oath prescribed by law.

30. [Same—Rejection of applicant: Further certificate.]—If an applicant shall be rejected, he shall not again be admitted to an examination for one year from the time of such rejection, and until he shall file a certificate that he has studied law for one year since his rejection.

31. [Same—Graduates of the College of Law.]—Graduates of the College of Law of the University of Nebraska shall make application and present proofs of qualifications in the same manner as other applicants. If found otherwise qualified by the commissioner, they shall be admitted without examination.

32. [Questions not involved in litigation.]—Only questions involved in matters of actual litigation before the court will be entertained or judicially determined, and no opinion will be filed in answer to any merely hypothetical question.

Digitized by Google

CASES REPORTED.

Page

Abraham, Barclay v. (Iowa).....1080
Abresch, Ringenoldus v. (Wis.)..... 817
Adkins v. Andrews (Neb.)..... 228
Agnew v. Omaha Nat. Bank (Neb.)..... 189
Albrecht v. Albrecht (Iowa).....1087
Aldinger, Channell v. (Iowa)..... 781
Allen v. Elmore (Iowa)..... 769
Allen, Eggett v. (Wis.)..... 803
Allen, John Stewart & Co. v. (Neb.)..... 528
Allen, Sykes v. (N. D.).....1134
Alling v. Woodard (Neb.)..... 127
American Cereal Co., Russ v. (Iowa).....1092
American Exch. Nat. Bank, Hoffman v. (Neb.) 112
American Exp. Co., Edwards v. (Iowa).... 740
American Grass Twine Co., Peterson v. (Minn.) 913
American Harrow Co. v. Deyo (Mich.)....1055
American Health Food Co., Ward v. (Wis.) 388
Ames, State v. (Minn.)..... 330
Andersen v. Andersen (Neb.)..... 276
Anderson v. Schurke (Iowa)..... 862
Anderson v. State (Neb.)..... 149
Anderson v. Van Buren Circuit Judge (Mich.) 927
Anderson v. Wirth (Mich.)..... 926
Anderson, Cleland v. (Neb.)..... 212
Anderson, Hyatt v. (Neb.)..... 620
Anderson, Sanford v. (Neb.)..... 486
Anderson, Weise v. (Mich.)..... 575
Anderson Carriage Co. v. Pungs (Mich.).. 563
Andrews, Adkins v. (Neb.)..... 228
Andrews, Balding v. (N. D.)..... 305
Ann Arbor, Corey v. (Mich.)..... 477
Arabian Horse Co. v. Bivens (Neb.)..... 621
Archer, In re (Mich.)..... 442
Armstrong v. Mutual Life Ins. Co. of New York (Iowa) 954
Arndt v. Thomas (Minn.).....1125
Arts, Salinger & Korte v. (Iowa)..... 780
Ashton, Hunn v. (Iowa)..... 745
Atherton, Reliance Trust Co. v. (Neb.)... 218
Atkinson v. Chicago & N. W. R. Co. (Wis.) 529
Atkinson, Leaman v. (Neb.)..... 149
Attorney General v. Bridgman (Mich.)... 438
Auditor General, Kennedy v. (Mich.)..... 928
Austin v. Detroit, Y. & A. A. Ry. (Mich.) 35

Babcock, Richardson v. (Wis.)..... 554
Bacon v. Iowa Savings & Loan Ass'n (Iowa) 977
Badger Lumber Co., Pearson v. (Neb.).... 493
Baird v. Connell (Iowa)..... 863
Baker, Linton v. (Neb.)..... 251
Baker, Union Cent. Life Ins. Co. v. (Neb.) 116
Balding v. Andrews (N. D.)..... 305
Baldwin v. Burt (Neb.) 401
Balluff, State v. (Iowa).....1130
Banhagel v. School Board of School Dist. No. 1 (Mich.)..... 506
Bankers' Building & Loan Ass'n v. Williams (Neb.) 655
Bank of Salem v. Shrimpton (Neb.).....1002
Barclay v. Abraham (Iowa).....1080
Barge, Haslam v. (Neb.)..... 245
Barlow, People v. (Mich.)..... 482
Barry v. Order of Catholic Knights of Wisconsin (Wis.) 797
Bartes, Grand Lodge A. O. U. W. v. (Neb.) 186
Barton v. Bruley (Wis.)..... 815
Bauer v. Taylor (Neb.)..... 268
Baum, Edney v. (Neb.)..... 167
Baxter, Opera House Co. of Faribault v. (Minn.) 1133

Page

Baxter, State v. (Neb.)..... 647
Bay v. Monroe County (Iowa)..... 854
Beardsley, Stevens v. (Mich.)..... 571
Beatrice, Nelson v. (Neb.)..... 288
Bebb, State v. (Iowa)..... 714
Beck, Sykes v. (N. D.)..... 844
Beer v. Plant (Neb.)..... 348
Beickler v. Guenther (Iowa)..... 895
Bell, Mathes v. (Iowa).....1093
Bemis v. McCloud (Neb.)..... 214
Bennett v. Bennett (Neb.)..... 994
Bennett v. Carr (Mich.)..... 26
Bennett's Estate v. Taylor (Neb.)..... 669
Benton, White & Hoskins v. (Iowa)..... 876
Benton Harbor, Nowlen v. (Mich.)..... 450
Berger, State v. (Iowa).....1094
Berkshire Life Ins. Co., Blumenthal v. (Mich.) 17
Bertness, Brookings Land & Trust Co. v. (S. D.) 97
Best v. Grolapp (Neb.)..... 641
Betts, Fisher v. (N. D.)..... 132
Bevering v. Smith (Iowa).....1110
Bigelow, In re (S. D.)..... 698
Bird, Martin County Bank v. (Minn.).... 915
Bitzer v. Washburn (Iowa)..... 978
Bivens, Arabian Horse Co. v. (Neb.)..... 621
Black v. Linn (S. D.)..... 697
Black v. Minneapolis & St. L. R. Co. (Iowa) 984
Black v. Webber (Neb.)..... 606
Blake, Eager v. (Neb.)..... 74
Blakemore v. Roberts (N. D.).....1029
Blohowak v. Grochoski (Wis.)..... 551
Bloodgood v. Terry (Mich.)..... 446
Bloom v. Winthrop State Bank (Iowa)... 733
Bloor v. Smith (Wis.)..... 544
Blumenthal v. Berkshire Life Ins. Co. (Mich.) 17
Boales v. Ferguson (Neb.)..... 337
Boardman v. Howard (Minn.)..... 84
Board of Equalization of City of Davenport, Heinz v. (Iowa)..... 967
Board of Equalization of City of Davenport Tp., German Trust Co. v. (Iowa)..... 878
Board of Sup'rs of Ionia County v. Ionia Circuit Judge (Mich.)..... 497
Board of Trustees of Policemen's Pension Fund, State v. (Wis.)..... 825
Bockoven, Metcalf v. (Neb.)..... 406
Boehl, Phœnix Ins. Co. v. (Neb.)..... 633
Boggs v. McEwen (Neb.)..... 666
Bohn v. Racine (Wis.) 813
Bolton v. Nebraska Chicory Co. (Neb.).... 148
Bonneville, National Cash Register Co. v. (Wis.) 558
Boone, Suddith v. (Iowa..... 853
Box v. Mason City & Ft. D. R. Co. (Iowa).1129
Boyle, Swift v. (Neb.).....1134
Braaflat v. Minneapolis & N. Elevator Co. (Minn.) 920
Bradburn v. Wabash R. Co. (Mich.)..... 929
Bradt v. Hartson (Neb.).....1008
Brafford, State v. (Iowa)..... 710
Brass v. Vandecar (Neb.).....1035
Brennan v. Goodfellow (Iowa)..... 962
Breschemier v. Houston (Iowa)..... 756
Brewster, Carnahan v. (Neb.)..... 590
Bridgman, Attorney General v. (Mich.).... 438
Briegel, Scheifert v. (Minn.)..... 44
Brier v. Davis (Iowa)..... 983
Brooke v. Eastman (S. D.)..... 699
Brookings Land & Trust Co. v. Bertness (S. D.) 97
Brown v. Collins (Neb.)..... 173

Digitized by Google

Page
Brown v. Forbes (Neb.) 52
Brown v. Helsley (Neb.) 187
Brown v. Keith (Neb.) 59
Brown v. Rapid R. Co. (Mich.) 925
Brown v. Roberts (Minn.) 793
Brown v. Silver (Neb.) 281
Brown v. Swarthout (Mich.) 951
Brown, Gundry v. (Neb.) 610
Bruley, Barton v. (Wis.) 815
Bruning's Estate, In re (Iowa) 780
Bryant, Penney v. (Neb.) 1033
Brynjolfson v. Osthus (N. D.) 261
Buchanan, Fisher v. (Neb.) 339
Buchanan, Smith v. (Iowa) 1086
Buck v. Oldeman (Neb.) 117
Buffum v. Descher (Neb.) 352
Bullard v. Bullard (Iowa) 1129
Bullard v. Laughlin (Neb.) 159
Bullard, Wisconsin Farm Land Co. v. (Wis.) 833
Burbach v. Milwaukee Electric Ry. & Light Co. (Wis.) 829
Burbanks v. Lepovsky (Mich.) 456
Burg, Reed v. (Neb.) 414
Burgess v. Stowe (Mich.) 29
Burlington, C. R. & N. R. Co., Marr v. (Iowa) 716
Burns, State v. (Iowa) 1130
Burns, State Security Bank v. (Iowa) 909
Burroughs v. Butler-Ryan Co. (Iowa) 750
Burt, Baldwin v. (Neb.) 401
Butler v. Davis (Wis.) 561
Butler-Ryan Co., Burroughs v. (Iowa) 750
Butterfield, Suckstorf v. (Neb.) 654
Byers Bros. & Co., Goff v. (Neb.) 1037

Caldwell v. Drummond (Iowa) 1122
Call, Sharp v. (Neb.) 1004
Cameron v. Mutual Life & Trust Co. (Iowa) 961
Campbell, Kaiser v. (Minn.) 916
Campbell, Union Stockyards Nat. Bank v. (Neb.) 608
Cannon, Trombley v. (Mich.) 516
Carnahan v. Brewster (Neb.) 590
Carr, Bennett v. (Mich.) 26
Carroll Normal School Co., Lee v. (Neb.) 65
Carson v. Murphy (Neb.) 110
Carter, State v. (Iowa) 710
Case Threshing Mach. Co., Heagney v. (Neb.) 175
Casgrain v. Hammond (Mich.) 510
Casley v. Mitchell (Iowa) 725
Cass County, Hertzler v. (N. D.) 294
Cass County, May v. (N. D.) 292
Casserly, Maney v. (Mich.) 478
Cather, State v. (Iowa) 722
Cemansky v. Fitch (Iowa) 754
Cemer, Sanitas Nut Food Co. v. (Mich.) 454
Chadima Bros., Young v. (Iowa) 1105
Chadron Loan & Building Ass'n v. Scott (Neb.) 220
Chaffee v. Park Falls Lumber Co. (Neb.) 495
Chaffee v. Sehestedt (Neb.) 161
Chaloupka, Kohout v. (Neb.) 173
Chalstrom, Mock v. (Iowa) 909
Chamber of Commerce of City of Milwaukee, Wood v. (Wis.) 835
Channell v. Aldinger (Iowa) 781
Chapman v. Wagner (Neb.) 412
Chapman, Male v. (Mich.) 582
Chase v. Nebraska Chicory Co. (Neb.) 1134
Chase v. Stearns (Iowa) 1123
Cheever v. Ellis (Mich.) 1067
Cheever v. Flint Land Co. (Mich.) 933
Chesley v. Rocheford & Gould (Neb.) 241
Chicago, B. & Q. R. Co. v. Giffen (Neb.) 1014
Chicago, B. & Q. R. Co., Fay v. (Neb.) 638
Chicago, M. & St. P. R. Co., Dailey v. (Iowa) 778
Chicago, M. & St. P. R. Co., State v. (Iowa) 904
Chicago, R. I. & P. R. Co. v. Colby (Neb.) 145
Chicago, R. I. & P. R. Co., Schlichting v. (Iowa) 959
Chicago & N. W. R. Co. v. Fox River Electric R. & Power Co. (Wis.) 541

Page
Chicago & N. W. R. Co., Atkinson v. (Wis.) 529
Chicago & N. W. R. Co., Miniter v. (Iowa) 1108
Chicago & N. W. R. Co., Peterson v. (Wis.) 532
Christian v. Michigan Debenture Co. (Mich.) 22
Churchill, Fokenga v. (Neb.) 143
Citizens' Bank, Webster v. (Neb.) 118
Citizens' Bank of Humphrey v. Stockslager (Neb.) 591
Citizens' National Bank v. Wilson (Iowa) 727
City of Ashland v. Northern Pac. R. Co. (Wis.) 688
City of Lincoln v. Miller (Neb.) 484
City of Muskegon v. Zeeryp (Mich.) 502
City of South Omaha v. Taylor (Neb.) 209
City of Wausau v. Heideman (Wis.) 549
Cizek v. Cizek (Neb.) 657
Clark v. Clark (Mich.) 924
Clark v. Colfax County (Neb.) 607
Clark v. Lancaster County (Neb.) 593
Clark v. Wolf (Neb.) 495
Clarke, Goddard v. (Neb.) 350
Clarkson Sawmill Co. v. Patrick (Neb.) 211
Clay v. Layton (Mich.) 458
Clay County, Mitchell v. (Neb.) 673
Clay County, Smith v. (Neb.) 1002
Cleland v. Anderson (Neb.) 212
Clemmons v. Clemmons (Neb.) 404
Cochran v. Philadelphia Mortgage & Trust Co. (Neb.) 1051
Coffield v. Parmenter (Neb.) 283
Colby, Chicago, R. I. & P. R. Co. v. (Neb.) 145
Cole v. Laird (Iowa) 744
Cole v. Shaw (Mich.) 573
Cole v. Watertown (Wis.) 538
Coleman, Modern Woodmen of America v. (Neb.) 154
Coleman, State v. (Iowa) 1130
Colfax County, Clark v. (Neb.) 607
Collins, Brown v. (Neb.) 173
Commercial State Bank v. Ketchum (Neb.) 614
Comstock & McQuiston, Stearns Paint Mfg. Co. v. (Iowa) 869
Concordia Loan & Trust Co. v. Douglas County (Neb.) 55
Conkling, Frieden v. (Neb.) 615
Connecticut Trust & Safe Deposit Co. v. Fletcher (Neb.) 988
Connell, Baird v. (Iowa) 863
Connor v. Connor (Mich.) 441
Connor v. Schreiner-Flack Grain Co. (Neb.) 221
Consterdine v. Moore (Neb.) 1021
Continental Ins. Co., Hooker v. (Neb.) 663
Corey v. Ann Arbor (Mich.) 477
Coughran v. Huron (S. D.) 92
Coulson v. Galtsman (Neb.) 349
Counsman v. Modern Woodmen of America (Neb.) 672
Cowgill, Swofford Bros. Dry Goods Co. v. (Neb.) 215
Craig v. Wabash R. Co. (Iowa) 965
Craig, Fourth Nat. Bank v. (Neb.) 185
Craig, German-American Sav. Bank v. (Neb.) 1023
Crancer & Curtice Co. v. McKinley Music Co. (Neb.) 617
Crandall, National Life Ins. Co. v. (Neb.) 624
Crane v. Odegard (N. D.) 326
Crane & Ordway v. Sauntry (Minn.) 794
Crary, Packer v. Iowa) 870
Creighton, Shelby v. (Neb.) 382
Cresian, Hedlund v. (Minn.) 1131
Crews, McCook Irr. & Water Power Co. v. (Neb.) 996
Crockett v. Miller (Neb.) 491
Crofford, State v. (Iowa) 889
Crossley, Hopkins v. (Mich.) 499
Crouch v. Pyle (Neb.) 1049
Cudney, Sherrard v. (Mich.) 15
Cummings v. Lynn (Iowa) 857
Cummings, Gallentine v. (Neb.) 178
Cunningham, Reed v. (Iowa) 1119
Currier v. Jones (Iowa) 766
Curtis v. Curtis (Mich.) 32
Curtis, Kurtz v. (Iowa) 1130
Cushing v. Schoeneman (Neb.) 346

Page
Cushing, Reardon v. (Minn.) 1126
Cutter, Woodard v. (Neb.) 54
Cyr, Gatiss v. (Mich.) 26

Dahl v. Stakke (N. D.) 353
Dailey v. Chicago, M. & St. P. R. Co. (Iowa) 778
Dallavo v. Richardson (Mich.) 20
Daly v. Milwaukee Electric Ry. & Light Co. (Wis.) 832
Darrah v. Juel (Neb.) 166
Davenport, German Trust Co. v. (Iowa) .. 878
Davenport Gas & Electric Co. v. Reimers (Iowa) 1084
Davidson v. Davidson (Neb.) 409
Davis v. Greenwood (Neb.) 526
Davis, Brier v. (Iowa) 983
Davis, Butler v. (Wis.) 561
Dawson County, Lexington Mill & Elevator Co. v. (Neb.) 62
Deering & Co. v. Walter (Neb.) 517
De Garmo, O'Banion v. (Iowa) 739
Deitrich, Hart v. (Neb.) 144
De Land v. Hall (Mich.) 449
Descher, Buffum v. (Neb.) 352
Detrick, Porter v. (Neb.) 271
Detroit Firemen's Fund Ass'n, Pokrefky v. (Mich.) 1057
Detroit Light Guard Band v. First Michigan Independent Infantry (Mich.) 934
Detroit Salt Co. v. National Salt Co. (Mich.) 1
Detroit Screw Works, Randa v. (Mich.) ... 454
Detroit United Ry., Ensley v. (Mich.) 34
Detroit, Y. & A. A. Ry., Austin v. (Mich.) 35
Detroit & N. W. R., Randall v. (Mich.) 567
Dewey v. Kimball (Minn.) 704
Dewey v. National Bond & Security Co. (Minn.) 704
Dewey, Rudd v. (Iowa) 973
Deyo, American Harrow Co. v. (Mich.) ... 1055
Dillenbeck v. Pinnell (Iowa) 860
Dineen, Grove v. (Neb.) 253
District Court of Ramsey County, State v. (Minn.) 737
Doerwald, Green v. (Neb.) 634
Donahue v. State (Neb.) 1038
Donahue, Jessen v. (Neb.) 639
Donaldson v. Donaldson (Mich.) 448
Donley, Ryan v. (Neb.) 49
Donley, Ryan v. (Neb.) 234
Dorwart v. Troyer (Neb.) 116
Doughty v. Hubbell (Neb.) 632
Douglas, Topping v. (Iowa) 1085
Douglas County, Concordia Loan & Trust Co. v. (Neb.) 55
Doyle v. Pelton (Mich.) 483
Drummond, Caldwell v. (Iowa) 1122
Dubuque Turbine & Roller Mill Co., Medart Patent Pulley Co. v. (Iowa) 770
Duffield, Lothrop v. (Mich.) 577
Dullenty, Kearney County Bank v. (Neb.) 169
Dunbar v. Lindsay (Wis.) 557
Dunn v. Thomas (Neb.) 142
Dunn, Robeson v. (S. D.) 104
Duxberry, Ramsdell v. (S. D.) 132

Eager v. Blake (Neb.) 74
Eastman, Brooke v. (S. D.) 699
Edger, Northern Counties Inv. Trust v. (Neb.) 1022
Edney v. Baum (Neb.) 167
Edwards v. American Exp. Co. (Iowa) 740
Edwards & Anderson v. Olin (Iowa) 742
Eggett v. Allen (Wis.) 803
Elfring v. New Birdsall Co. (S. D.) 703
Ellis, Cheever v. (Mich.) 1067
Elmore, Allen v. (Iowa) 769
Emerick v. Sweeney Cattle Co. (S. D.) 93
Englehardt - Winning - Davison Mercantile Co., Lynch v. (Neb.) 524
English v. Smith (Neb.) 60
Ensley v. Detroit United Ry. (Mich.) 34
Erickson v. Sorby (Minn.) 791
Erickson, Kirkeby v. (Minn.) 705
Erret v. Pritchard (Iowa) 963

Page
Eureka, Strait v. (S. D.) 695
Eurich, Gray v. (Neb.) 343
Evans City Steam Laundry, Fronk v. (Neb.) 1053

Fargo, Gagnier v. (N. D.) 841
Fargo, Pine Tree Lumber Co. v. (N. D.) ... 357
Farmers' Loan & Trust Co. v. Hastings (Neb.) 104
Farmers' & Merchants' Bank v. Hoffman (Neb.) 1044
Farmers' & Merchants' Bank v. Stockdale (Iowa) 732
Farmers' & Merchants' Ins. Co. v. Graff (Neb.) 605
Farmers' & Merchants' Ins. Co. v. Hahn (Neb.) 255
Fassler, Roher v. (Neb.) 523
Faville v. State Trust Co. (Iowa) 1109
Fawcett, State v. (Neb.) 219
Fay v. Chicago, B. & Q. R. Co. (Neb.) ... 638
Ferguson v. Frink (Mich.) 1131
Ferguson, Boales v. (Neb.) 337
Ferris v. Marshall (Neb.) 602
Figg v. Hanger (Neb.) 658
Finn, Grosse Pointe Tp. v. (Mich.) 1078
First Michigan Independent Infantry, Detroit Light Guard Band v. (Mich.) 934
First Nat. Bank v. Snyder (Neb.) 285
Fischbeck v. Mielenz (Wis.) 426
Fisher v. Betts (N. D.) 132
Fisher v. Buchanan (Neb.) 339
Fisher v. Western Union Telegraph Co. (Wis.) 545
Fishwild & Williams, Pratt v. (Iowa) 1089
Fisk v. Osgood (Neb.) 237
Fitch, Cemansky v. (Iowa) 754
Fleming v. Hager (Iowa) 752
Fletcher, Connecticut Trust & Safe Deposit Co. v. (Neb.) 988
Flint Land Co., Cheever v. (Mich.) 933
Fokenga v. Churchill (Neb.) 143
Forbes, Brown v. (Neb.) 52
Forester v. Van Auken (N. D.) 301
Fourth Nat. Bank v. Craig (Neb.) 185
Fowler v. Jenks (Minn.) 914
Fox, German Mut. Fire Ins. Co. v. (Neb.) 652
Fox River Electric R. & Power Co., Chicago & N. W. R. Co. v. (Wis.) 541
Frank, Scott v. (Iowa) 764
Frankfort, Schmid v. (Mich.) 1056
Fremont, Kreader v. (Neb.) 616
Fremont Package Mfg. Co. v. Storey (Neb.) 416
French, Rogers v. (Iowa) 767
Fribourg, Sioux City Stock Yards Co. v. (Iowa) 747
Frieden v. Conkling (Neb.) 615
Fries, Southern Pine Lumber Co. v. (Neb.) 71
Friesenhan v. Michigan Tel. Co. (Mich.) ... 501
Frink, Ferguson v. (Mich.) 1131
Fronk v. J. H. Evans City Steam Laundry (Neb.) 1053
Fruit Dispatch Co. v. Murray (Minn.) 88

Gagnier v. Fargo (N. D.) 841
Galbraith v. Paine (N. D.) 258
Gallentine v. Cummings (Neb.) 178
Galtsman, Coulson v. (Neb.) 349
Gangelhoff, Meagher v. (Minn.) 1132
Gans, Solack v. (Neb.) 633
Garrigan v. Huntimer (S. D.) 1135
Garrigan v. Kennedy (S. D.) 89
Garver, Merrill v. (Neb.) 619
Gatiss v. Cyr (Mich.) 26
Gavitt v. Moulton (Wis.) 395
German-American Sav. Bank v. Craig (Neb.) 1023
German Evangelical Lutheran Trinity Church, Reinke v. (S. D.) 90
German Ins. Co. v. Stiner (Neb.) 122
German Ins. Co. of Freeport, Ill., v. Shader (Neb.) 604
German Mut. Fire Ins. Co. v. Fox (Neb.) .. 652
German Trust Co. v. Board of Equalization of City of Davenport Tp. (Iowa) .....

Page
German Trust Co. v. Davenport (Iowa)... 878
Geyer, Wells v. (N. D.)... 289
Giffen, Chicago, B. & Q. R. Co. v. (Neb.)..1014
Gifford, National Life & Trust Co. v. (Minn.)... 919
Gillispie v. Stafford (Neb.)...1039
Gingrich v. Rogers (Neb.)... 156
Goddard v. Clarke (Neb.)... 350
Goddard v. Lincoln (Neb.)... 273
Goff v. Byers Bros. & Co. (Neb.)...1037
Goldstein v. Morgan (Iowa)... 897
Goodfellow, Brennan v. (Iowa)... 962
Gordon v. Stewart (Neb.)... 624
Gotchall, Huber Mfg. Co. v. (Neb.)... 611
Gould v. W. J. Gould & Co. (Mich.)... 576
Gould & Co., Gould v. (Mich.)... 576
Graebner v. Post (Wis.)... 783
Graff, Farmers' & Merchants' Ins. Co. v. (Neb.)... 605
Grand Lodge A. O. U. W. v. Bartes (Neb.) 186
Grand Trunk Elevator Co., Storrie v. (Mich.)... 569
Grant v. Keystone Lumber Co. (Wis.).... 535
Grant, Green v. (Mich.)... 583
Grant, Hine v. (Wis.)... 796
Gray v. Eurich (Neb.)... 343
Gray v. Naiman (Neb.)... 343
Great Northern R. Co., Schmidt v. (Minn.)..1133
Great Northern R. Co., Vant Hul v. (Minn.)... 789
Green v. Doerwald (Neb.)... 634
Green v. Grant (Mich.)... 583
Greenwood, Davis v. (Neb.)... 526
Grether v. Smith (S. D.)... 93
Griffith v. Lehman (Neb.)... 991
Grochoski, Blohowak v. (Wis.)... 551
Grolapp, Best v. (Neb.)... 641
Grondahl, Nelson v. (N. D.)... 299
Grosse Pointe Tp. v. Finn (Mich.)...1078
Grosse Pointe Tp., Paye v. (Mich.)...1077
Grove v. Dineen (Neb.)... 253
Guenther, Beickler v. (Iowa)... 895
Guest, Muchmore v. (Neb.)... 194
Gundry v. Brown (Neb.)... 610
Gunn, Russell v. (Neb.)... 341
Guthrie v. State (Neb.)... 243

Hagadorn v. Wagoner (Neb.)... 184
Hager, Fleming v. (Iowa)... 752
Hagerman v. Thomas (Neb.)... 631
Hahn, Farmers' & Merchants' Ins. Co. v. (Neb.)... 255
Haight, Sullivan v. (Neb.)... 487
Hale v. Knapp (Mich.)...1060
Hall v. Western Travelers' Acc. Ass'n (Neb.)... 170
Hall, De Land v. (Mich.)... 449
Hall, Wenke v. (S. D.)... 103
Hamilton, Woodmen Acc. Ass'n v. (Neb.).. 989
Hamilton County, Hyatt v. (Iowa)... 855
Hammer, Staten v. (Iowa)... 964
Hammond, Casgrain v. (Mich.)... 510
Hanger, Figg v. (Neb.)... 658
Hanley v. Kraftczyk (Wis.)... 820
Hansen v. Mortensen (Neb.)... 216
Hare v. Winterer (Neb.)... 179
Hargadine, McKittrick Dry Goods Co. v. Krug (Neb.)... 286
Harle-Haas Drug Co., Taylor v. (Neb.)... 182
Harmon v. Metcalfe (Mich.)...1060
Harney, In re (Mich.)... 795
Hart v. Deitrich (Neb.)... 144
Hartman Mfg. Co. v. Luse (Iowa)... 972
Hartson, Bradt v. (Neb.)...1008
Hartwig v. Manistee (Mich.)...1067
Haskell v. Read (Neb.)...1007
Haslam v. Barge (Neb.)... 245
Hastings, Farmers' Loan & Trust Co. v. (Neb.)... 104
Hasty, State v. (Iowa)...1115
Hauser Malting Co., Hunt v. (Minn.)... 85
Hawkeye Ins. Co. v. Huston (Iowa)... 895
Heagney v. J. I. Case Threshing Mach. Co. (Neb.)... 175
Hedlund v. Cresian (Minn.)...1131
Heffernan v. O'Neill (Neb.)... 244

Page
Hegg v. Zuckmayer (Iowa)...1130
Heideman, Wausau v. (Wis.)... 549
Heinemann, Muench v. (Wis.)... 800
Heinz v. Board of Equalization of City of Davenport (Iowa)... 967
Helsley, Brown v. (Neb.)... 187
Henninger, Wolcott v. (Neb.)... 612
Hertzler v. Cass County (N. D.)... 294
Hill v. Pitt (Neb.)... 339
Hill, Schmuck v. (Neb.)... 158
Hillers v. Yeiser (Neb.)... 683
Hine v. Grant (Wis.)... 796
Hittle, United States Fidelity & Guaranty Co. v. (Iowa)... 782
Hodge v. Muscatine County (Iowa)... 968
Hoerr v. Loehr (Minn.)...1131
Hoerr v. Nelson (Minn.)...1132
Hoerr v. Swedberg (Minn.)...1132
Hoerr v. Thompson (Minn.)...1132
Hoffman v. American Exch. Nat. Bank (Neb.)... 112
Hoffman, Farmers' & Merchants' Bank v. (Neb.)...1044
Hoga's Estate v. Look (Mich.)... 439
Holdrege v. Watson (Neb.)... 67
Holliday v. Wright (Mich.)... 949
Holloway, State v. (Minn.)... 40
Holmes, Storm v. (Neb.)... 73
Holt v. Rust-Owen Lumber Co. (Neb.).... 613
Homstad, Waldum v. (Wis.)... 806
Hooker v. Continental Ins. Co. (Neb.)... 663
Hopkins v. Crossley (Mich.)... 499
Horn v. Williamson (Neb.)... 178
Hoskins v. Iowa Land Co. (Iowa)... 977
Houghton, Klingenfeld v. (Neb.)... 76
Houghton County St. R. Co., Kotila v. (Mich.)... 437
Houghton County St. R. Co., Olivier v. (Mich.)... 434
Houston, Breschemier v. (Iowa)... 756
Howard, Boardman v. (Minn.)... 84
Howe, Phœnix Ins. Co. v. (Neb.)... 73
Hoy v. State (Neb.)... 228
Hruby, Sovereign Camp Woodmen of the World v. (Neb.)... 998
Hubbell, Doughty v. (Neb.)... 632
Huber Mfg. Co. v. Gotchall (Neb.)... 611
Hulett's Estate, In re (Iowa)... 952
Hunn v. Ashton (Iowa)... 745
Hunt v. Hauser Malting Co. (Minn.)... 85
Hunter, Iowa Land Co. v. (Iowa)...1130
Hunter, State v. (Wis.)... 921
Hunter, State Sav. Bank v. (Iowa)...1123
Huntimer, Garrigan v. (S. D.)...1135
Hupfer v. National Distilling Co. (Wis.).. 809
Huron, Coughran v. (S. D.)... 92
Huston v. Sioux Falls Tp. (S. D.)... 88
Huston, Hawkeye Ins. Co. v. (Iowa)... 895
Hutchinson v. Smidt (Neb.)... 601
Hyatt v. Anderson (Neb.)... 620
Hyatt v. Hamilton County (Iowa)... 855

International Harvester Co. of America v. Lyman (Minn.)... 87
Ionia Circuit Judge, Board of Sup'rs of Ionia County v. (Mich.)... 497
Iowa Cent. R. Co., Williams v. (Iowa).... 774
Iowa Land Co. v. Hunter (Iowa)...1130
Iowa Land Co., Hoskins v. (Iowa)... 977
Iowa Savings & Loan Ass'n, Bacon v. (Iowa)... 977
Iron Cliffs Co., Negaunee Iron Co. v. (Mich.) 468
Irwin, State v. (Iowa)...1130
Ish v. Marsh (Neb.)... 58

Jackson & S. Traction Co., Leslie v. (Mich.) 580
Janu, J. B. Streeter, Jr., Co. v. (Minn.)....1128
J. B. Streeter, Jr., Co. v. Janu (Minn.)..1128
Jelsman, M. Rumley Co. v. (Neb.)... 147
Jenks, Fowler v. (Minn.)... 914
Jessen v. Donahue (Neb.)... 639
Jeutter, Staunchfield v. (Neb.)... 642
J. H. Evans City Steam Laundry, Fronk v. (Neb.)...1053
J. I. Case Threshing Mach. Co., Heagney v. (Neb.)... 175

Digitized by Google

Page
Johns v. Kamarad (Neb.) 118
Johnson v. Kindred State Bank (N. D.) 588
Johnson, Lane & Co. v. Nash-Wright Co. (Iowa) 760
Johnson, Waters v. (Mich.) 504
Johnson, Whitwell v. (Neb.) 272
John Stewart & Co. v. Allen (Neb.) 528
Jones v. Jones (S. D.) 88
Jones v. Pendleton (Mich.) 574
Jones, Currier v. (Iowa) 766
Jones & Adams Coal Co., Upthegrove v. (Wis.) 385
Judge of Superior Court of Grand Rapids, Tweddle v. (Mich.) 22
Juel, Darrah v. (Neb.) 166

Kahler v. Kertson (Mich.) 1131
Kaiser v. Campbell (Minn.) 916
Kamarad, Johns v. (Neb.) 118
Kautenberger, Plano Mfg. Co. v. (Iowa) 743
Kearney County Bank v. Dullenty (Neb.) 169
Keeley Institute of Kansas v. Riggs (Neb.) 1010
Keever, Leidigh v. (Neb.) 106
Keith, Brown v. (Neb.) 59
Keller Mfg. Co., McDonnell v. (Minn.) 785
Kelley, Wells v. (Iowa) 1104
Kellum, Kennedy v. (Minn.) 792
Kennedy v. Auditor General (Mich.) 928
Kennedy v. Kellum (Minn.) 792
Kennedy v. Niles (Iowa) 772
Kennedy, Garrigan v. (S. D.) 89
Kertson, Kahler v. (Mich.) 1131
Ketchum, Commercial State Bank v. (Neb.) 614
Keystone Lumber Co., Grant v. (Wis.) 535
Kiler, State v. (Iowa) 952
Kimball, Dewey v. (Minn.) 704
Kindred State Bank, Johnson v. (N. D.) 588
King, State v. (Iowa) 712
Kingman & Co., Pope v. (Neb.) 519
Kingsley v. Svoboda (Neb.) 518
Kinzer v. Stephens (Iowa) 858
Kirby v. Waterman (S. D.) 129
Kirkeby v. Erickson (Minn.) 705
Kitchen Bros. Hotel Co. v. Philbin (Neb.) 487
Klingenfeld v. Houghton (Neb.) 76
Knapp, Hale v. (Mich.) 1060
Knickerbocker Ice Co., Schneider v. (Wis.) 542
Knight, Wolkins v. (Mich.) 445
Knudson v. Parker (Neb.) 1010
Koehler v. Reed (Neb.) 380
Kohout v. Chaloupka (Neb.) 173
Korbel v. Skocpol (Neb.) 1022
Kotila v. Houghton County St. R. Co. (Mich.) 437
Kraftczyk, Hanley v. (Wis.) 820
Kratky, Waneck v. (Neb.) 651
Kreader v. Fremont (Neb.) 616
Krug, Hargadine, McKittrick Dry Goods Co. v. (Neb.) 286
Kurtz v. Curtis (Iowa) 1130

Laird, Cole v. (Iowa) 744
Lake County, Williamson v. (S. D.) 702
Lancaster County, Clark v. (Neb.) 593
Lane v. Wright (Iowa) 902
Lang v. Menasha Paper Co. (Wis.) 393
Langan v. Parkhurst (Neb.) 63
Lapsley, Thompson v. (Minn.) 788
Larson, Leland Norwegian Lutheran Congregation, Winnebago County v. (Iowa) 706
Lashmett v. Prall (Neb.) 152
Laughlin, Bullard v. (Neb.) 159
Layton, Clay v. (Mich.) 458
Leaman v. Atkinson (Neb.) 149
Lee v. Carroll Normal School Co. (Neb.) 65
Leech, White v. (Iowa) 709
Lehman, Griffith v. (Neb.) 991
Leidigh v. Keever (Neb.) 106
Leiser, Pereles v. (Wis.) 799
Leland Norwegian Lutheran Congregation, Winnebago County v. Larson (Iowa) 706
Lemon v. McBride (Mich.) 453
Lepovsky, Burbanks v. (Mich.) 456
Leslie v. Jackson & S. Traction Co. (Mich.) 580

Page
Lexington Mill & Elevator Co. v. Dawson County (Neb.) 62
Lincoln, Goddard v. (Neb.) 273
Lincoln, Northdruft v. (Neb.) 163
Lincoln Medical College of Cotner University, McLeod v. (Neb.) 265
Lincoln Sav. Bank & Safe Deposit Co., Morrison v. (Neb.) 230
Linden v. McCormick (Minn.) 785
Lindsay, Dunbar v. (Wis.) 557
Lingle v. Lingle (Iowa) 708
Linn, Black v. (S. D.) 697
Linton v. Baker (Neb.) 251
Loehr, Hoerr v. (Minn.) 1131
Look, Hoga's Estate v. (Mich.) 439
Looney, MacCall v. (Neb.) 238
Lord v. National Protective Soc. (Mich.) 443
Lothrop v. Duffield (Mich.) 577
Lotway, Union Pac. R. Co. v. (Neb.) 527
Lound, Winside State Bank v. (Neb.) 496
Lowe v. State (Wis.) 417
Lucas v. Whitacre (Iowa) 776
Luense, State v. (Iowa) 1131
Luse, Hartman Mfg. Co. v. (Iowa) 972
Lyman, International Harvester Co. of America v. (Minn.) 87
Lynch v. Englehardt-Winning-Davison Mercantile Co. (Neb.) 524
Lynn, Cummings v. (Iowa) 857
Lyon County, Reynolds v. (Iowa) 1096

McBride, Lemon v. (Mich.) 453
MacCall v. Looney (Neb.) 238
McCarthy v. Morgan (Neb.) 489
McCarthy v. Murphy (Wis.) 531
McCloskey v. School Dist. No. 5 of Wheatland Tp. (Mich.) 18
McCloud, Bemis v. (Neb.) 214
McConaughey, Ulrich v. (Neb.) 645
McCook Irr. & Water Power Co. v. Crews (Neb.) 996
McCord, Brady Co. v. Tessier (Neb.) 342
McCormick, Linden v. (Minn.) 785
McCormick Harvesting Mach. Co. v. Morlan (Iowa) 976
McCormick Harvesting Mach. Co., Wolcott's Estate v. (Neb.) 216
McCullough, Union Ins. Co. of Lincoln v. (Neb.) 79
McDermott, Sporer v. (Neb.) 232, 659
McDonnell v. Keller Mfg. Co. (Minn.) 785
McElhone v. Wilkinson (Iowa) 868
McEwen, Boggs v. (Neb.) 666
McFarland, Tower v. (Neb.) 172
McGolrick v. Maxwell (Minn.) 1132
McHale v. Metz (Neb.) 1004
McKee v. McKee (Neb.) 489
McKenney, Pollard v. (Neb.) 679
McKinley Music Co., Crancer & Curtice Co. v. (Neb.) 617
McLagan & Pierce v. Witte (Neb.) 490
McLeod v. Lincoln Medical College of Cotner University (Neb.) 265
McLucas v. St. Joseph & G. I. R. Co. (Neb.) 115
McMillan, State v. (N. D.) 310
McNeeley, Neff v. (Neb.) 150
McVey v. Peddie (Neb.) 166
Male v. Chapman (Mich.) 582
Malley v. Malley (Iowa) 751
Mally v. Mally (Iowa) 735
Maney v. Casserly (Mich.) 478
Manistee, Hartwig v. (Mich.) 1067
Manker v. Phœnix Loan Ass'n of St. Joseph (Iowa) 982
Manning v. Spry (Iowa) 873
Marion, Marion Water Co. v. (Iowa) 883
Marion Water Co. v. Marion (Iowa) 883
Mark, Peterson v. (Mich.) 926
Markham, Meyers v. (Minn.) 335
Markham, Meyers v. (Minn.) 787
Marr v. Burlington, C. R. & N. R. Co. (Iowa) 716
Marsh v. State (Neb.) 520
Marsh, Ish v. (Neb.) 58

Digitized by Google

Page
Marshall, Ferris v. (Neb.) 602
Martin County Bank v. Bird (Minn.) 915
Mason City & Ft. D. R. Co., Box v. (Iowa) 1129
Mathes v. Bell (Iowa) 1093
Maxwell, McGolrick v. (Minn.) 1132
May v. Cass County (N. D.) 292
Meagher v. Gangelhoff (Minn.) 1132
Meagher v. Rixe (Minn.) 1132
Meagher v. Watkins (Minn.) 1132
Meagher v. Watkins (Minn.) 1133
Medart Patent Pulley Co. v. Dubuque Turbine & Roller Mill Co. (Iowa) 770
Menasha Paper Co., Lang v. (Wis.) 393
Merrill v. Garver (Neb.) 619
Merrill v. Van Camp (Neb.) 344
Merrill v. Van Camp (Neb.) 617
Merrill, Merrill Ry. & Lighting Co. v. (Wis.) 686
Merrill Ry. & Lighting Co. v. Merrill (Wis.) 686
Metcalf v. Bockoven (Neb.) 406
Metcalfe, Harmon v. (Mich.) 1060
Metz, McHale v. (Neb.) 1004
Meyer, Wentz v. (Neb.) 272
Meyers v. Markham (Minn.) 335
Meyers v. Markham (Minn.) 787
Michigan Debenture Co., Christian v. (Mich.) 22
Michigan Soapworks, Stevens v. (Mich.) 435
Michigan Tel. Co., Friesenhan v. (Mich.) 501
Michigan Trust Co. v. Red Cloud (Neb.) 140
Mielenz, Fischbeck v. (Wis.) 426
Miles, Williams v. (Neb.) 151
Miller, City of Lincoln v. (Neb.) 484
Miller, Crockett v. (Neb.) 491
Miller, Strack v. (Mich.) 452
Miller & Leith, Tiernan v. (Neb.) 661
Milwaukee Electric Ry. & Light Co., Burbach v. (Wis.) 829
Milwaukee Electric Ry. & Light Co., Daly v. (Wis.) 832
Milwaukee Electric Ry. & Light Co., Smith v. (Wis.) 823
Milwaukee Harvester Co., Rosso v. (Neb.) 213
Miniter v. Chicago & N. W. R. Co. (Iowa) 1108
Minneapolis, St. P. & S. S. M. R. Co., Wright v. (N. D.) 324
Minneapolis & N. Elevator Co., Braaflat v. (Minn.) 920
Minneapolis & St. L. R. Co., Black v. (Iowa) 984
Minnehaha County, Moody County v. (S. D.) 698
Missouri Pac. R. Co., Parkins v. (Neb.) 683
Missouri Valley, Wilkins v. (Iowa) 868
Mitchell v. Clay County (Neb.) 673
Mitchell, Casley v. (Iowa) 725
Mizner v. School Dist. No. 11 of Sherman County (Neb.) 128
Mizner v. School Dist. No. 11 of Sherman County (Neb.) 1006
Mock v. Chalstrom (Iowa) 909
Modern Woodmen of America v. Coleman (Neb.) 154
Modern Woodmen of America, Counsman v. (Neb.) 672
Modisett, Schulz v. (Neb.) 338
Momrich v. Schwartz (Neb.) 636
Monroe County, Bay v. (Iowa) 854
Montgomery v. Tucker (N. D.) 1134
Montgomery v. Whitbeck (N. D.) 327
Moody County v. Minnehaha County (S. D.) 698
Moody County, Pettigrew v. (S. D.) 94
Moore v. State (Neb.) 196
Moore v. Waddington (Neb.) 279
Moore, Consterdine v. (Neb.) 1021
Moores v. State (Neb.) 225
Moores, State v. (Neb.) 1011
Moran's Will, In re (Wis.) 367
Morgan, Goldstein v. (Iowa) 897
Morgan, McCarthy v. (Neb.) 489
Morlan, McCormick Harvesting Mach. Co. v. (Iowa) 976
Morrison v. Lincoln Sav. Bank & Safe Deposit Co. (Neb.) 230
Morse, Neal v. (Mich.) 14
Mortensen, Hansen v. (Neb.) 216
Morton v. Smiley (Wis.) 534
Morton v. Western Seed & Irrigation Co. (Neb.) 183
Moulton, Gavitt v. (Wis.) 395
M. Rumley Co. v. Jelsman (Neb.) 147
Muchmore v. Guest (Neb.) 194
Muench v. Heinemann (Wis.) 800
Mulch, State v. (S. D.) 101
Murphy v. Sampson (Neb.) 494
Murphy, Carson v. (Neb.) 110
Murphy, McCarthy v. (Wis.) 531
Murray, Fruit Dispatch Co. v. (Minn.) 83
Muscatine County, Hodge v. (Iowa) 968
Mutual Ben. Life Ins. Co. v. Siefken (Neb.) 603
Mutual Life Ins. Co. of New York, Armstrong v. (Iowa) 954
Mutual Life & Trust Co., Cameron v. (Iowa) 961
Myers, Warder, Bushnell & Glessner Co. v. (Neb.) 992

Naiman, Gray v. (Neb.) 343
Nash v. Wilkinson (Neb.) 623
Nash-Wright Co., Johnson, Lane & Co. v. (Iowa) 760
National Bank of Minneapolis, Town of Birch Cooley v. (Minn.) 1133
National Bond & Security Co., Dewey v. (Minn.) 704
National Cash Register Co. v. Bonneville (Wis.) 558
National Distilling Co., Hupfer v. (Wis.) 809
National Life Ins. Co. v. Crandall (Neb.) 624
National Life & Trust Co. v. Gifford (Minn.) 919
National Mut. Bldg. & Loan Ass'n v. Retzman (Neb.) 204
National Protective Soc., Lord v. (Mich.) 443
National Salt Co., Detroit Salt Co. v. (Mich.) 1
Neal v. Morse (Mich.) 14
Nebraska Chicory Co., Bolton v. (Neb.) 148
Nebraska Chicory Co., Chase v. (Neb.) 1134
Neff v. McNeeley (Neb.) 150
Negaunee Iron Co. v. Iron Cliffs Co. (Mich.) 468
Nehls, Sauer v. (Iowa) 759
Nelson v. Beatrice (Neb.) 288
Nelson v. Grondahl (N. D.) 299
Nelson, Hoerr v. (Minn.) 1132
Nelson, Pardee v. (Neb.) 630
Nelson, Thompson v. (Neb.) 194
New Birdsall Co., Elfring v. (S. D.) 703
Newbro v. Undeland (Neb.) 635
Newis v. Topfer (Iowa) 905
News Pub. Co. v. Tyndale (Neb.) 125
Nichols v. Roberts (N. D.) 298
Niles, Kennedy v. (Iowa) 772
Northdruft v. Lincoln (Neb.) 163
Northern Counties Inv. Trust v. Edger (Neb.) 1022
Northern Pac. R. Co., City of Ashland v. (Wis.) 688
Northern Pac. R. Co., State v. (Minn.) 81
Nowlen v. Benton Harbor (Mich.) 450

O'Banion v. De Garmo (Iowa) 739
O'Brien v. State (Neb.) 649
O'Brien v. Wisconsin Cent. R. Co. (Wis.) 424
O'Brien County Democrat, Sheldon Mail v. (Iowa) 773
Odegard, Crane v. (N. D.) 326
Ohrns v. Woodward (Mich.) 950
Oldeman, Buck v. (Neb.) 117
Olds v. State Land Office Com'r (Mich.) 508
Olin, Edwards & Anderson v. (Iowa) 742
Olivier v. Houghton County St. R. Co. (Mich.) 434
Olson v. Shirley (N. D.) 297
Omaha Brewing Ass'n v. Tillenburg (Neb.) 107
Omaha Bridge & Terminal R. Co. v. Reed (Neb.) 276
Omaha Gas Mfg. Co., Schlemme v. (Neb.) 644
Omaha Nat. Bank, Agnew v. (Neb.) 189

Page
Omaha Sav. Bank v. Rosewater (Neb.).... 68
O'Neill, Heffernan v. (Neb.)..... 244
Onstott, Wilson v. (Iowa)..... 779
Opera House Co. of Fairbault v. Baxter (Minn.) 1133
Order of Catholic Knights of Wisconsin, Barry v. (Wis.)..... 797
Ornstein v. Yahr & Lange Drug Co. (Wis.) 826
Osgood, Fisk v. (Neb.)..... 237
Osthus, Brynjolfson v. (N. D.)..... 261

Packer v. Crary (Iowa)..... 870
Paine, Galbraith v. (N. D.)..... 258
Pardee v. Nelson (Neb.)..... 630
Parish, People's Building, Loan & Savings Ass'n v. (Neb.)..... 243
Parker v. Parker (Neb.)..... 208
Parker, Knudson v. (Neb.).....1010
Park Falls Lumber Co., Chaffee v. (Neb.).. 495
Parkhurst, Langan v. (Neb.)..... 63
Parkins v. Missouri Pac. R. Co. (Neb.)... 683
Parkinson v. Parkinson (Mich.)..... 497
Parmenter, Coffield v. (Neb.)..... 283
Parrotte, Stein v. (Neb.)..... 155
Paska, Sullivan Transfer Co. v. (Neb.)... 163
Patrick, Clarkson Sawmill Co. v. (Neb.).. 211
Patterson, State v. (Wis.).....1135
Paulus v. Reed (Iowa)..... 757
Paxton & Gallagher v. Vadbouker (Neb.)... 378
Paye v. Grosse Pointe Tp. (Mich.).....1077
Payne v. Pettibone & Nixon (Neb.)..... 117
Pearl Tp. v. Thorp (S. D.)..... 99
Pearson v. Badger Lumber Co. (Neb.).... 493
Peddie, McVey v. (Neb.)..... 166
Pella, Roelefsen v. (Iowa)..... 738
Pelton, Doyle v. (Mich.)..... 483
Pendleton, Jones v. (Mich.)..... 574
Penney v. Bryant (Neb.).....1033
People v. Barlow (Mich.)..... 482
People v. Portenga (Mich.)..... 17
People v. Quimby (Mich.).....1061
People v. Salsbury (Mich.)..... 936
People's Building, Loan & Savings Ass'n v. Parish (Neb.) 243
People's Building, Loan & Savings Ass'n v. Pickard (Neb.)..... 337
Pepperl, Tannyhill v. (Neb.).....1005
Pereles v. Leiser (Wis.)..... 799
Peterson v. American Grass Twine Co. (Minn.) 913
Peterson v. Chicago & N. W. R. Co. (Wis.) 532
Peterson v. Mark (Mich.)..... 926
Pettibone v. Yeiser (Neb.)..... 193
Pettibone & Nixon, Payne v. (Neb.)..... 117
Pettigrew v. Moody County (S. D.)..... 94
Philadelphia Mortgage & Trust Co., Cochran v. (Neb.).....1051
Philbin, Kitchen Bros. Hotel Co. v. (Neb.).. 487
Phœnix Ins. Co. v. Boehl (Neb.)..... 633
Phœnix Ins. Co. v. Howe (Neb.)..... 73
Phoenix Loan Ass'n of St. Joseph, Manker v. (Iowa)..... 982
Phœnix Mut. Life Ins. Co. v. Sparks (Neb.) 214
Pickard, People's Building, Loan & Savings Ass'n v. (Neb.)..... 337
Pine Tree Lumber Co. v. Fargo (N. D.)... 357
Pinnell, Dillenbeck v. (Iowa)..... 860
Pitt, Hill v. (Neb.)..... 339
Plano Mfg. Co. v. Kautenberger (Iowa)... 743
Plant, Beer v. (Neb.)..... 348
Pokrefky v. Detroit Firemen's Fund Ass'n (Mich.) 1057
Pollard v. McKenney (Neb.)..... 679
Pope v. Kingman & Co. (Neb.)..... 519
Portenga, People v. (Mich.)..... 17
Porter v. Detrick (Neb.)..... 271
Porter v. Trompen (Neb.)..... 226
Post, Graebner v. (Wis.)..... 783
Prall, Lashmett v. (Neb.)..... 152
Pratt v. Fishwild & Williams (Iowa).....1089
Prentice, Thornily v. (Iowa)..... 728
Price, Robson v. (Mich.)..... 433
Prigge, Union Cent. Life Ins. Co. v. (Minn.) 917
Pritchard, Erret v. (Iowa)..... 963
Puckett, Stocker v. (S. D.)..... 91

Page
Pungs, Anderson Carriage Co. v. (Mich.)... 563
Pyle, Crouch v. (Neb.).....1049
Pym v. Pym (Wis.)..... 429

Quimby, People v. (Mich.).....1061

Racine, Bohn v. (Wis.)..... 813
Raker, Waters v. (Neb.)..... 78
Ramsdell v. Duxberry (S. D.)..... 132
Randa v. Detroit Screw Works (Mich.).. 454
Randall v. Detroit & N. W. R. (Mich.).. 567
Rapid City, Tenney v. (S. D.)..... 96
Rapid R. Co., Brown v. (Mich.)..... 925
Read, Haskell v. (Neb.).....1007
Reardon v. Cushing (Minn.).....1126
Red Cloud, Michigan Trust Co. v. (Neb.).. 140
Reed v. Burg (Neb.)..... 414
Reed v. Cunningham (Iowa).....1119
Reed, Koehler v. (Neb.)..... 880
Reed, Omaha Bridge & Terminal R. Co. v. (Neb.) 276
Reed, Paulus v. (Iowa)..... 757
Reed, Ward v. (Mich.)..... 488
Reimers, Davenport Gas & Electric Co. v. (Iowa) 1084
Reinke v. German Evangelical Lutheran Trinity Church (S. D.)..... 90
Reliance Trust Co. v. Atherton (Neb.).... 218
Retzman, National Mut. Bldg. & Loan Ass'n v. (Neb.)..... 204
Reynolds v. Lyon County (Iowa).....1096
Richardson v. Babcock (Wis.) 554
Richardson, Dallavo v. (Mich.)..... 20
Riggs, Keeley Institute of Kansas v. (Neb.) 1010
Ringenoldus v. Abresch (Wis.)..... 817
Rixe, Meagher v. (Minn.).....1132
Roberts, Blakemore v. (N. D.).....1029
Roberts, Brown v. (Minn.)..... 793
Roberts, Nichols v. (N. D.)..... 298
Robertson, Willis v. (Iowa)..... 900
Robeson v. Dunn (S. D.)..... 104
Robson v. Price (Mich.)..... 433
Rocheford & Gould, Chesley v. (Neb.).... 241
Roelefsen v. Pella (Iowa)..... 738
Rogers v. French (Iowa)..... 767
Rogers, Gingrich v. (Neb.)..... 156
Roher v. Fassler (Neb.)..... 523
Rooney, Woodring v. (Iowa).....1100
Rosewater, Omaha Sav. Bank v. (Neb.).... 68
Rosso v. Milwaukee Harvester Co. (Neb.).. 213
Rothrock, Young v. (Iowa).....1105
Rudd v. Dewey (Iowa)..... 973
Rumley Co. v. Jelsman (Neb.)..... 147
Russ v. American Cereal Co. (Iowa).....1092
Russell v. Gunn (Neb.)..... 341
Rust-Owen Lumber Co., Holt v. (Neb.).... 613
Ryan v. Donley (Neb.)..... '49
Ryan v. Donley (Neb.)..... 234

St. Joseph & B. H. St. R. Co., Westphal v. (Mich.)..... 19
St. Joseph & G. I. R. Co., McLucas v. (Neb.) 115
Salinger & Korte v. Arts (Iowa)..... 780
Salsbury, People v. (Mich.)..... 936
Sampson, Murphy v. (Neb.)..... 494
Sanborn v. Van Duyne (Minn.)..... 41
Sanford v. Anderson (Neb.)..... 486
Sanitas Nut Food Co. v. Cemer (Mich.)... 454
Sauer v. Nehls Iowa)..... 759
Sauntry, Crane & Ordway v. (Minn.)..... 794
Scheifert v. Briegel (Minn.)..... 44
Schlemme v. Omaha Gas Mfg. Co. (Neb.).. 644
Schlichting v. Chicago, R. I. & P. R. Co. (Iowa) 959
Schmid v. Frankfort (Mich.).....1056
Schmidt v. Great Northern R. Co. (Minn.).1133
Schmidt v. Zeugner (Minn.).....1134
Schmuck v. Hill (Neb.)..... 158
Schneider v. Knickerbocker Ice Co. (Wis.) 542
Schoeneman, Cushing v. (Neb.)..... 346
School Board of School Dist. No. 1, Banhagel v. (Mich.) 506
School Dist. No. 5 of Wheatland Tp., McCloskey v. (Mich.)..... 18

Digitized by Google

Page
School Dist. No. 11 of Sherman County, Mizner v. (Neb.) 128
School Dist. No. 11 of Sherman County, Mizner v. (Neb.) 1006
Schreiner-Flack Grain Co., Connor v. (Neb.) 221
Schulz v. Modisett (Neb.) 338
Schurke, Anderson v. (Iowa) 862
Schuyler Nat. Bank, Smith v. (Neb.) 1031
Schwartz, Momrich v. (Neb.) 636
Scott v. Frank (Iowa) 764
Scott, Chadron Loan & Building Ass'n v. (Neb.) 220
Scovil, Spencer v. (Neb.) 1016
Scroggs, State v. (Iowa) 723
Sehestedt, Chaffee v. (Neb.) 161
Shader, German Ins. Co. of Freeport, Ill., v. (Neb.) 604
Sharp v. Call (Neb.) 1004
Sharp, Sullivan Sav. Inst. v. (Neb.) 522
Shaw, Cole v. (Mich.) 573
Shelby v. Creighton (Neb.) 382
Sheldon Mail v. O'Brien County Democrat (Iowa) 773
Sheridan, State v. (Iowa) 730
Sherrard v. Cudney (Mich.) 15
Shirley, Olson v. (N. D.) 297
Shrimpton, Bank of Salem v. (Neb.) 1002
Siefken, Mutual Ben. Life Ins. Co. v. (Neb.) 603
Silver, Brown v. (Neb.) 281
Sioux City Stock Yards Co. v. Fribourg (Iowa) 747
Sioux Falls Tp., Huston v. (S. D.) 88
Skocpol, Korbel v. (Neb.) 1022
Sleight v. Supreme Council of Mystic Toilers (Iowa) 1100
Smidt, Hutchinson v. (Neb.) 601
Smiley, Morton v. (Wis.) 534
Smith v. Buchanan (Iowa) 1086
Smith v. Clay County (Neb.) 1002
Smith v. Milwaukee Electric Ry. & Light Co. (Wis.) 823
Smith v. Schuyler Nat. Bank (Neb.) 1031
Smith, Bevering v. (Iowa) 1110
Smith, Bloor v. (Wis.) 544
Smith, English v. (Neb.) 60
Smith, Grether v. (S. D.) 93
Smith, State v. (Iowa) 899
Smoky Hollow Coal Co., Thayer v. (Iowa) 718
Snyder, First Nat. Bank v. (Neb.) 285
Solack v. Gans (Neb.) 633
Sorby, Erickson v. (Minn.) 791
Southern Pine Lumber Co. v. Fries (Neb.) 71
South Omaha, Trephagen v. (Neb.) 248
Sovereign Camp Woodmen of the World v. Hruby (Neb.) 998
Sparks, Phœnix Mut. Life Ins. Co. v. (Neb.) 214
Spelts & Klosterman v. Ward (Neb.) 56
Spencer v. Scovil (Neb.) 1016
Sporer v. McDermott (Neb.) 232, 659
Spry, Manning v. (Iowa) 873
Stafford, Gillispie v. (Neb.) 1039
Stakke, Dahl v. (N. D.) 353
State v. Ames (Minn.) 330
State v. Balluff (Iowa) 1130
State v. Baxter (Neb.) 647
State v. Bebb (Iowa) 714
State v. Berger (Iowa) 1094
State v. Board of Trustees of Policemen's Pension Fund (Wis.) 825
State v. Brafford (Iowa) 710
State v. Burns (Iowa) 1130
State v. Carter (Iowa) 710
State v. Cather (Iowa) 722
State v. Chicago, M. & St. P. R. Co. (Iowa) 904
State v. Coleman (Iowa) 1130
State v. Crofford (Iowa) 889
State v. District Court of Ramsey County (Minn.) 737
State v. Fawcett (Neb.) 219
State v. Hasty (Iowa) 1115
State v. Holloway (Minn.) 40
State v. Hunter (Wis.) 921
State v. Irwin (Iowa) 1130

Page
State v. Kiler (Iowa) 952
State v. King (Iowa) 712
State v. Luense (Iowa) 1131
State v. McMillan (N. D.) 310
State v. Moores (Neb.) 1011
State v. Mulch (S. D.) 101
State v. Northern Pac. R. Co. (Minn.) 81
State v. Patterson (Wis.) 1135
State v. Scroggs (Iowa) 723
State v. Sheridan (Iowa) 730
State v. Smith (Iowa) 899
State v. Stolley (Iowa) 707
State v. Stull (Neb.) 121
State v. Tough (N. D.) 1025
State v. Weston (Neb.) 668
State, Anderson v. (Neb.) 149
State, Donahue v. (Neb.) 1038
State, Guthrie v. (Neb.) 243
State, Hoy v. (Neb.) 228
State, Lowe v. (Wis.) 417
State, Marsh v. (Neb.) 520
State, Moore v. (Neb.) 196
State, Moores v. (Neb.) 225
State, O'Brien v. (Neb.) 649
State, Van Syoc v. (Neb.) 266
State, Von Forel v. (Neb.) 648
State Land Office Com'r, Olds v. (Mich.) 508
Staten v. Hammer (Iowa) 964
State Sav. Bank v. Hunter (Iowa) 1123
State Security Bank v. Burns (Iowa) 909
State Trust Co., Faville v. (Iowa) 1109
Staunchfield v. Jeutter (Neb.) 642
Stearns, Chase v. (Iowa) 1123
Stearns Paint Mfg. Co. v. Comstock & McQuiston (Iowa) 869
Stein v. Parrotte (Neb.) 155
Stephens, Kinzer v. (Iowa) 858
Stevens v. Beardsley (Mich.) 571
Stevens v. Michigan Soapworks (Mich.) 435
Stewart, Gordon v. (Neb.) 624
Stewart & Co. v. Allen (Neb.) 528
Stiner, German Ins. Co. v. (Neb.) 122
Stockdale, Farmers' & Merchants' Bank v. (Iowa) 732
Stocker v. Puckett (S. D.) 91
Stockslager, Citizens' Bank of Humphrey v. (Neb.) 591
Stolley, State v. (Iowa) 707
Storey, Fremont Package Mfg. Co. v. (Neb.) 416
Storm v. Holmes (Neb.) 73
Storrie v. Grand Trunk Elevator Co. (Mich.) 569
Stowe, Burgess v. (Mich.) 29
Strack v. Miller (Mich.) 452
Strait v. Eureka (S. D.) 695
Streeter, Jr., Co. v. Janu (Minn.) 1128
Stull v. Stull (Neb.) 196
Stull, State v. (Neb.) 121
Suckstorf v. Butterfield (Neb.) 654
Suddith v. Boone (Iowa) 853
Sullivan v. Haight (Neb.) 487
Sullivan Sav. Inst. v. Sharp (Neb.) 522
Sullivan Transfer Co. v. Paska (Neb.) 163
Supreme Council of Mystic Toilers, Sleight v. (Iowa) 1100
Supreme Court of Honor, Tracy v. (Neb.) 1007
Svoboda, Kingsley v. (Neb.) 518
Swarthout, Brown v. (Mich.) 951
Swedberg, Hoerr v. (Minn.) 1132
Sweeney Cattle Co., Emerick v. (S. D.) 93
Swift v. Boyle (Neb.) 1134
Swofford Bros. Dry Goods Co. v. Cowgill (Neb.) 215
Sykes v. Allen (N. D.) 1134
Sykes v. Beck (N. D.) 844

Tannyhill v. Pepperl (Neb.) 1005
Taylor v. Harle-Haas Drug Co. (Neb.) 182
Taylor v. Weckerly (Neb.) 618
Taylor, Bauer v. (Neb.) 268
Taylor, Bennett's Estate v. (Neb.) 669
Taylor, City of South Omaha v. (Neb.) 209
Tenney v. Rapid City (S. D.) 96
Terry, Bloodgood v. (Mich.) 446
Tessier, McCord, Brady Co. v. (Neb.) 342
Thayer v. Smoky Hollow Coal Co. (Iowa) 718

Page
Thomas, Arndt v. (Minn.).....1125
Thomas, Dunn v. (Neb.)..... 142
Thomas, Hagerman v. (Neb.)..... 631
Thompson v. Lapsley (Minn.)..... 788
Thompson v. Nelson (Neb.)..... 194
Thompson, Hoerr v. (Minn.).....1132
Thornily v. Prentice (Iowa)..... 728
Thorp, Pearl Tp. v. (S. D.)..... 99
Tiernan v. Miller & Leith (Neb.)..... 661
Tilden, Westinghouse Co. v. (Neb.)..... 74
Tillenburg, Omaha Brewing Ass'n v. (Neb.) 107
Tootle, Lemon & Co. v. Willy (Neb.)..... 342
Topfer, Newis v. (Iowa)..... 905
Topping v. Douglas (Iowa).....1085
Tough, State v. (N. D.).....1025
Tower v. McFarland (Neb.)..... 172
Town of Birch Cooley v. National Bank of Minneapolis (Minn.).....1133
Town of Schoepke v. Wolfgram (Wis.)... 556
Tracy v. Supreme Court of Honor (Neb.)..1007
Travis v. Watson (Mich.)..... 28
Trephagen v. South Omaha (Neb.)..... 248
Trombley v. Cannon (Mich.)..... 516
Trompen, Porter v. (Neb.)..... 226
Troyer, Dorwart v. (Neb.)..... 116
Tucker, Montgomery v. (N. D.).....1134
Tweddle v. Judge of Superior Court of Grand Rapids (Mich.)..... 22
Tyler, Zell v. (Minn.).....1133
Tyndale, News Pub. Co. v. (Neb.)..... 125

Ulrich v. McConaughey (Neb.)..... 645
Undeland, Newbro v. (Neb.)..... 635
Union Cent. Life Ins. Co. v. Baker (Neb.).. 116
Union Cent. Life Ins. Co. v. Prigge (Minn.) 917
Union Ins. Co. of Lincoln v. McCullough (Neb.)..... 79
Union Pac. R. Co. v. Lotway (Neb.)..... 527
Union Stockyards Nat. Bank v. Campbell (Neb.)..... 608
United States Fidelity & Guaranty Co. v. Hittle (Iowa)..... 782
United States Fidelity & Guaranty Co., Wilkinson v. (Wis.)..... 560
Upthegrove v. Jones & Adams Coal Co. (Wis.)..... 385

Vadbouker, Paxton & Gallagher v. (Neb.) 378
Van Auken, Forester v. (N. D.)..... 301
Van Buren Circuit Judge, Anderson v. (Mich.)..... 927
Van Camp, Merrill v. (Neb.)..... 344
Van Camp, Merrill v. (Neb.)..... 617
Vandecar, Brass v. (Neb.).....1035
Van Duyne, Sanborn v. (Minn.)..... 41
Van Syoc v. State (Neb.)..... 266
Vant Hul v. Great Northern R. Co. (Minn.) 789
Von Forel v. State (Neb.)..... 648

Wabash R. Co., Bradburn v. (Mich.)..... 929
Wabash R. Co., Craig v. (Iowa)..... 965
Waddington, Moore v. (Neb.)..... 279
Wagner, Chapman v. (Neb.)..... 412
Wagoner, Hagadorn v. (Neb.)..... 184
Waldum v. Homstad (Wis.)..... 806
Walter, William Deering & Co. v. (Neb.).. 517
Waneck v. Kratky (Neb.)..... 651
Ward v. American Health Food Co. (Wis.) 388
Ward v. Reed (Mich.)..... 438
Ward, Spelts & Klosterman v. (Neb.).... 56
Warder, Bushnell & Glessner Co. v. Myers (Neb.)..... 992
Washburn, Bitzer v. (Iowa)..... 978
Waterman, Kirby v. (S. D.)..... 129
Waters v. Johnson (Mich.)..... 504
Waters v. Raker (Neb.)..... 78
Watertown, Cole v. (Wis.)..... 538
Watkins v. Youll (Neb.).....1042
Watkins, Meagher v. (Minn.).....1132
Watkins, Meagher v. (Minn.).....1133
Watson, Holdrege v. (Neb.)..... 67

Page
Watson, Travis v. (Mich.)..... 28
Webber, Black v. (Neb.)..... 606
Webster v. Citizens' Bank (Neb.)..... 118
Weckerly, Taylor v. (Neb.)..... 618
Weise v. Anderson (Mich.)..... 575
Wells v. Geyer (N. D.)..... 289
Wells v. Kelley (Iowa).....1104
Wenke v. Hall (S. D.)..... 103
Wentz v. Meyer (Neb.)..... 272
Western Seed & Irrigation Co., Morton v. (Neb.)..... 183
Western Travelers' Acc. Ass'n, Hall v. (Neb.)..... 170
Western Union Telegraph Co., Fisher v. (Wis.)..... 545
Westinghouse Co. v. Tilden (Neb.)..... 74
Weston, State v. (Neb.)..... 668
Westphal v. St. Joseph & B. H. St. R. Co. (Mich.)..... 19
Whitacre, Lucas v. (Iowa)..... 776
Whitbeck, Montgomery v. (N. D.)..... 327
White v. Leech (Iowa)..... 709
White & Hoskins v. Benton (Iowa)..... 876
Whitwell v. Johnson (Neb.)..... 272
Wilkins v. Missouri Valley (Iowa)..... 868
Wilkinson v. United States Fidelity & Guaranty Co. (Wis.)..... 560
Wilkinson, McElhone v. (Iowa)..... 868
Wilkinson, Nash v. (Neb.)..... 623
William Deering & Co. v. Walter (Neb.).. 517
Williams v. Iowa Cent. R. Co. (Iowa)..... 774
Williams v. Miles (Neb.)..... 151
Williams, Bankers' Building & Loan Ass'n v. (Neb.)..... 655
Williamson v. Lake County (S. D.)..... 702
Williamson, Horn v. (Neb.)..... 178
Willis v. Robertson (Iowa)..... 900
Willy, Tootle, Lemon & Co. v. (Neb.)..... 342
Wilson v. Onstott (Iowa)..... 779
Wilson, Citizens' National Bank v. (Iowa).. 727
Winside State Bank v. Lound (Neb.)..... 496
Winterer, Hare v. (Neb.)..... 179
Winthrop State Bank, Bloom v. (Iowa)... 733
Wirth, Anderson v. (Mich.)..... 926
Wisconsin Cent. R. Co., O'Brien v. (Wis.).. 424
Wisconsin Farm Land Co. v. Bullard (Wis.) 833
Wise, In re (Iowa)..... 872
Withnell v. Withnell (Neb.)..... 221
Witte, McLagan & Pierce v. (Neb.)..... 490
Witzel v. Zuel (Minn.).....1124
W. J. Gould & Co., Gould v. (Mich.)..... 576
Wolcott v. Henninger (Neb.)..... 612
Wolcott's Estate v. McCormick Harvesting Mach. Co. (Neb.)..... 216
Wolf, Clark v. (Neb.)..... 495
Wolfgram, Schoepke v. (Wis.)..... 556
Wolkins v. Knight (Mich.)..... 445
Wood v. Chamber of Commerce of City of Milwaukee (Wis.)..... 835
Woodard v. Cutter (Neb.)..... 54
Woodard, Alling v. (Neb.)..... 127
Woodmen Acc. Ass'n v. Hamilton (Neb.)... 989
Woodring v. Rooney (Iowa).....1100
Woodward, Ohrns v. (Mich.)..... 950
Wright v. Minneapolis, St. P. & S. S. M. R. Co. (N. D.)..... 324
Wright, Holliday v. (Mich.)..... 949
Wright, Lane v. (Iowa)..... 902

Yahr & Lange Drug Co., Ornstein v. (Wis.) 826
Yeiser, Hillers v. (Neb.)..... 683
Yeiser, Pettibone v. (Neb.)..... 193
Youll, Watkins v. (Neb.).....1042
Young v. Chadima Bros. (Iowa).....1105
Young v. Rothrock (Iowa).....1105

Zeeryp, City of Muskegon v. (Mich.)..... 502
Zell v. Tyler (Minn.).....1133
Zeugner, In re (Minn.).....1134
Zeugner, Schmidt v. (Minn.).....1134
Zuckmayer, Hegg v. (Iowa).....1130
Zuel, Witzel v. (Minn.).....1124

Digitized by Google

Digitized by Google

REHEARINGS DENIED.

[Cases in which rehearings have been denied, without the rendition of a written opinion, since the publication of the original opinions in previous volumes of this reporter.]

Ætna Life Ins. Co. v. Rehlaender (Neb.) 94 N. W. 129.
Armstrong v. Mayer (Neb.) 95 N. W. 483.

Baker v. Gillan (Neb.) 94 N. W. 615.
Bixby v. Bruce (Neb.) 95 N. W. 34.
Boevink v. Christiaanse (Neb.) 95 N. W. 652.
Braasch v. Cemetery Ass'n of the Evangelical Lutheran Christ Soc. (Neb.) 95 N. W. 646.
Burkholder v. Hollicheck (Neb.) 95 N. W. 860.

Chadron Loan & Building Ass'n v. Hayes (Neb.) 95 N. W. 812, 868.
Clark v. Commercial Nat. Bank (Neb.) 94 N. W. 958.
Crewison v. Oelschlegal (Neb.) 94 N. W. 814.

Downing v. Hartshorn (Neb.) 95 N. W. 801.
Draper v. Tucker (Neb.) 95 N. W. 1026.

Equitable Trust Co. v. Omaha (Neb.) 95 N. W. 650.

First Nat. Bank v. Avery Planter Co. (Neb.) 95 N. W. 622.
First Nat. Bank v. Gibson (Neb.) 94 N. W. 965.
First Nat. Bank v. Johnson (Neb.) 94 N. W. 837.
First Nat. Bank v. Wishard (Neb.) 95 N. W. 1133.
Folsom v. Peru Plow & Implement Co. (Neb.) 95 N. W. 635.
Fremont Brewing Co. v. Pekarek (Neb.) 95 N. W. 12.

Ganow v. Denney (Neb.) 94 N. W. 959.
German Nat. Bank v. Beatrice Rapid Transit & Power Co. (Neb.) 95 N. W. 49.
Gibbs v. Seibt (Wis.) 93 N. W. 1097.
Gilbert v. Garber (Neb.) 95 N. W. 1030.

Hitchcock v. Gothenburg Water Power & Irrigation Co. (Neb.) 95 N. W. 638.

Lamb v. State (Neb.) 95 N. W. 1050.
Lemmert v. Guthrie Bros. (Neb.) 95 N. W. 1046.
Lincoln Mill Co. v. Wissler (Neb.) 95 N. W. 857.
Linton v. Cathers (Neb.) 95 N. W. 1044.

McCormick Harvesting Mach. Co. v. Hiatt (Neb.) 95 N. W. 627.
Maxwell v. Odell (Neb.) 95 N. W. 840.

Omaha Bridge & Terminal R. Co. v. Whitney (Neb.) 94 N. W. 513.
Omaha Sav. Bank v. Omaha (Neb.) 95 N. W. 593.
Omaha St. R. Co., Boeson (Neb.) 94 N. W. 619.

Paxton v. Scott (Neb.) 92 N. W. 611.
Porter v. Parker (Neb.) 94 N. W. 123.

Rice v. Allen (Neb.) 95 N. W. 704.
Riley v. Missouri Pac. R. Co. (Neb.) 95 N. W. 20.
Russell v. State (Neb.) 92 N. W. 751.

Schick v. Whitcomb (Neb.) 94 N. W. 1023.
Shull v. Barton (Neb.) 93 N. W. 132.
Snyder v. Johnson (Neb.) 95 N. W. 692.

Waller v. Deranleau (Neb.) 94 N. W. 1038.
Western Union Tel. Co. v. Wakefield (Neb.) 95 N. W. 659.
White v. Whitney (Neb.) 94 N. W. 1012.
Williams v. State (Neb.) 95 N. W. 1014.

See End of Index for Tables of Northwestern Cases in State Reports.

Digitized by Google

Digitized by Google

THE

NORTHWESTERN REPORTER.

VOLUME 96.

DETROIT SALT CO. v. NATIONAL SALT CO.

(Supreme Court of Michigan. July 14, 1903.)

CONTRACTS—CONSTRUCTION — RESTRAINT OF TRADE—MONOPOLIES—SURROUNDING CIRCUMSTANCES—EVIDENCE.

1. On a question as to whether a contract providing for the sale to defendant of the entire output of salt manufactured by plaintiff was illegal as in restraint of trade and in violation of anti-trust laws, it was competent to show the circumstances attending the making of the contract, the object in view, and the construction placed on it by the parties, as evidenced by their dealings under it.

2. Where there is dispute and uncertainty as to the intention and knowledge of parties to a contract, not illegal on its face, the question should be submitted to the jury, but, where the evidence is consistent only with an unlawful object on the part of all the parties, it should not be submitted.

3. In an action on a contract by which plaintiff corporation agreed to sell to defendant the entire output of salt manufactured by plaintiff, and which contained provisions under which defendant might stop the manufacture on payment of certain amounts, the defense was illegality of the contract. It appeared that plaintiff's president, who made the contract, knew that defendant controlled the market in the eastern states, and that it controlled some plants in the section of country in which plaintiff's plant was located, and was trying to obtain control of others; and letters between the defendant and the president showed that he was getting options for defendant on other plants, and showed a willingness by the president to aid defendant in closing, and preventing the construction of, opposing plants. Several contracts similar to the one in controversy had been drawn and considered prior to its execution, but had been rejected because containing provisions illegal on their face. Plaintiff's president testified that he was unaware of an unlawful object on defendant's part to gain a monopoly. *Held* that, if the contract was not illegal on its face, it was so in view of the circumstances, and plaintiff could not recover thereon.

4. It was proper on cross-examination of plaintiff's president, in order to refute his testimony, to ask him if he did not know that defendant corporation was a monopoly, and that it sought to control the market, and that it made other contracts with salt manufacturers.

Grant, J., dissenting.

Error to Circuit Court, Wayne County; Robert E. Frazer, Judge.

Action by the Detroit Salt Company against the National Salt Company. Judgment for plaintiff, and defendant brings error. Reversed.

Thomas A. E. Weadock (John A. McKay, of counsel), for appellant. Clark, Durfee & Allor (Gray & Gray, of counsel), for appellee.

HOOKER, C. J. The plaintiff is a Michigan corporation; the defendant, a corporation organized under the law of New Jersey. Both are engaged in the manufacture and sale of salt. The plaintiff has a plant at Detroit.

This action is brought to recover the purchase price of a quantity of salt sold by the plaintiff to the defendant. The latter has appealed from a verdict and judgment of about $10,000.

The recovery is based upon a written contract, which, though dated July 28, 1899, was executed in October of the same year. The principal defense is that the contract is in restraint of trade, and in violation of the anti-trust laws of the state and nation, and therefore illegal and void. We insert it in full:

"This agreement made this twenty-eighth day of July, 1899, between the Detroit Salt Company, a corporation of Michigan, its successors or assigns, party of the first part, and the National Salt Company, a corporation of New Jersey, its successors or assigns, party of the second part.

"Witnesseth: That for and in consideration of the sum of one dollar ($1.00) and other valuable consideration, paid by the party of the second part to the party of the first part, receipt of which is hereby acknowledged, the party of the first part hereby sells to the party of the second part, their production of salt made at their works, situated on the line of the Wabash Railroad, in Wayne county, state of Michigan, for the term of five (5) years, commencing on the first day of October, 1899, upon the following terms and conditions:

"I. For the first 300,000 barrels of salt of 280 lbs. each delivered per annum, 33c for each and every 280 lbs. of No. 1 Medium salt, and 28c for each and every 280 lbs. of No. 2 Medium salt, delivered on warehouse floor of plant of party of first part. For any

Digitized by Google

salt manufactured in excess of 300,000 barrels, price shall be fifteen cents (15c) per 280 lbs. of salt, delivered as aforesaid. Any dairy or table salt which may be required by the second party will be furnished by first party within their capacity to produce same at 45c per 280 lbs.

"II. Invoices for shipment shall be rendered promptly, and statements shall be rendered upon the last working day of each month for shipments made during that month. Payments therefor shall be made not later than the 15th day of the next month succeeding shipment for all invoices, except such invoices concerning which there may be a dispute as to quantity or quality, such invoices to be settled when adjustment has been agreed upon.

"III. Should party of the second part fail to remove salt hereby sold, in sufficient quantities so as to enable the party of the first part to run said plant to its full capacity, thereby necessitating the suspension of manufacture in all or any part of said plant; because of lack of storage room due to failure of party of second part to remove said salt, then five days after due notice in writing to second party of such failure, the party of the second part shall pay to the party of the first part, as liquidated damages, the sum of 16c per 280 lbs. of salt not manufactured in consequence thereof, for a period of time not exceeding six months in the aggregate in any one year; and for any time exceeding six months in any one year (dating from the date of this agreement), the sum of 32c per barrel upon estimated capacity of said plant or any portion thereof that may be closed down in consequence of the failure of said party of the second part to remove salt as heretofore agreed. The capacity of said plant to be determined by taking 150 barrels of salt of 280 lbs. each as an average daily production of each pan and multiplying the same by the number of pans idle, not exceeding six, however, that being the number in said plant.

"IV. It is distinctly understood that the party of the first part makes no obligation to deliver a specific quantity of salt, but they do agree to deliver to the party of the second part their entire production, and their failure to do so shall be settled by liquidated damages to be paid the party of the second part by the party of the first part, of thirty-five thousand ($35,000) dollars per year.

"V. And the party of the first part does hereby license the party of the second part to the exclusive name as trade mark, and to the organization of the Detroit Salt Company during the period of this contract.

"VI. Party of the second part hereby agrees to ship via Wabash Railroad the entire production of salt hereby purchased, providing the facilities furnished and the rate of freight made by the Wabash Railroad Company are as advantageous as those given by competitive lines, and the prevailing freight differential between Saginaw Valley points, Cleveland and Detroit, maintained. It is understood in this connection that any favorable privileges granted by the Wabash R. R. Co., and now enjoyed by the party of the first part, shall accrue to the advantage of the party of the second part.

"VII. The party of the first part agrees to assign all contracts for cooperage, specifically described in Exhibit A hereto attached, to the party of the second part, and to sell to the party of the second part all cooper stock, bags and pockets that said party of the first part has on hand October 1st at cost. Also to sell all salt on hand on October 1st at the same price as stated in paragraph one.

"VIII. In the event of the destruction of the plant belonging to the party of the first part, as a whole, or in part, by fire or other cause, they shall have the privilege of rebuilding the same to its present capacity.

"It is understood that the price named herein is based upon the present price of fuel which is $1.25 per ton for Pittsburg No. 8 coarse slack, and $1.10 per ton for Hocking coarse slack f. o. b. Detroit. Any advance in same is to be borne by the party of the second part, and any decline to accrue to their benefit.

"In Witness Whereof, the parties hereto have caused these presents to be duly executed on their behalf, by their respective officers, and their respective incorporated seals hereunto affixed.

"[Signed] Detroit Salt Co.
"[Seal.] By J. M. Mulkey, Pt.
"National Salt Co.
"[Seal.] By A. S. White, Prest.
"Attest: Jno. Alvin Young."

The defendant claims that the trial judge should have directed a verdict in its favor, instead of leaving to the jury the question whether the contract was illegal and void. The important questions presented by the record are: (1) Can we say that the contract is illegal upon its face? (2) Can we say that it should be so construed, in the light of the undisputed circumstances attending its making, and the dealings under it? (3) Was there error in the exclusion of answers to questions asked upon the cross-examination of the plaintiff? (4) Should we say that the verdict was so clearly at variance with the weight of evidence as to require a reversal?

1. Was the contract illegal upon its face? Counsel for the defendant insist that upon its face this writing provides for a lawful sale of plaintiff's salt, and contains no agreement that is in restraint of production or trade, or that in any way violates the provisions of the anti-trust laws. The contract provides for the sale of plaintiff's entire output of salt. The price to be paid was 31 cents a barrel up to 300,000 barrels per annum, and 16 cents per barrel for all in excess thereof, the salt to be delivered on the floor

Digitized by Google

of plaintiff's warehouse. It was provided that, if plaintiff should sell any of its product to others, it should forfeit and pay to the defendant the sum of $35,000, and, if the defendant should interrupt the manufacture of salt by the plaintiff, it should pay to plaintiff, for its damages, 16 cents per barrel upon the average daily output for the preceding three months, for a period of not exceeding six months, and 32 cents a barrel after six months. The contract contained "a license of the exclusive name of the plaintiff, as a trade mark, and the organization," and it provided that, in case of destruction of the plant by fire, the plaintiff might rebuild to its former capacity. We can conceive of a bona fide desire on the part of the defendant to purchase plaintiff's salt to the extent of 300,000 barrels at 31 cents per barrel, and a willingness to take salt in excess of that amount, if it could buy such excess, at a sufficiently reduced price. And we can understand how the plaintiff might be willing to make a radical reduction in price, for such excess, for the sake of a satisfactory price for the first 300,000 barrels, and the assurance of a market for all that it might produce. On the other hand, we can understand that, if defendant's object was to reduce production, a contract by which it secured the right to purchase such excess at less than cost of production, especially when fortified by the right to exact a $35,000 penalty for selling to others, would pretty effectively prevent the manufacture of any excess. It would be as efficacious as an express agreement that plaintiff should reduce his output to 300,000 barrels, or that he should not increase his capacity beyond that amount. With nothing upon the face of the agreement to show the capacity of the plant, or the value of salt, or the cost of its production, we cannot say that the bare contract of purchase at the prices named was an illegal contract; and, if that were all that this contract attempted to provide for, it would be clear that we could not declare this contract illegal upon its face, whatever we might be justified in saying when it should be viewed in the light of attending circumstances. We might think a difference of 50 per cent. on the price of such a staple commodity a radical cut to make if the parties expected free competition in the market, and be suspicious of the purpose of the parties, but this would not justify us in holding the contract illegal upon its face. This suspicion may justly be increased when we find that the parties have anticipated a breach of the contract by defendant whereby production should be reduced, and made provisions under which the defendant might stop the manufacture by allowing the floor to remain filled with its salt for a given price per barrel on the capacity of the mill, which stoppage could practically be continued indefinitely at that price by clearing the floor once in six months. There can be no question that the defendant could practically close up this plant under this contract. Whether it could afford to do it on the basis of 16 cents a barrel we do not know, but we can conceive of a price that would be quite convincing that such action would be profitable. When we take these provisions into consideration, with the somewhat peculiar agreement about the use of plaintiff's name and organization, the $35,000 penalty for selling to others, and the limitation on the capacity in case plaintiff should have occasion to rebuild, we think there is much upon the face of the contract to indicate that the parties had in contemplation the control of plaintiff's production. But conceding, though not deciding, that we should not hold this contract to be illegal upon its face, we will next consider the circumstances under which it was made, and see whether they throw such light upon the intention of the parties as to conclusively establish the illegality of this sale of salt.

2. Were the surrounding circumstances such as to conclusively establish the illegality of the contract? The testimony of Mr. Mulkey shows that, about the time of their negotiations, the National Salt Company controlled some plants in the Saginaw Valley and Manistee, and he knew that they were trying to get others, though he says that White "was pretty careful not to tell him what other contracts he had made." He admitted that the purpose of making this contract was, in its inception, to lower the price of salt, because the Michigan Salt Association had sent salt into the territory of the National Salt Company and depressed its trade, and that company wanted to lease plaintiff's works, with a view to throwing salt on the market to injure the Michigan Salt Association, and threatened to build large works and injure the plaintiff's business, unless it acceded to its proposal. He stated that before the contract sued upon was made he was willing to contract, for his company, that it should not sell any salt east of the Mississippi river, though he knew that the freight rates beyond that boundary were prohibitive, and he also knew that the National Salt Company controlled the market in New York and the Eastern states. He testified that he did not recollect any conversation to the effect that other plants were to be closed, to limit the production of salt, but that, this talk having covered a period of three months, there might have been, and probably was, conversation of that kind. Shall we believe this? Mulkey also testified that, for a period previous to the making of this contract, men engaged in the salt trade were in and out of his office, discussing the matter, and he knew that they were negotiating with the National Salt Company, and that Mr. White was the man who got the salt manufacturers together. He also knew by report what the National Salt Company was doing in the way of making other contracts; that it controlled the markets in New

Digitized by Google

York and the Eastern states. On September 20, 1899, he wrote White that some Bay City men—McEwan and Rouse—wanted some information regarding arrangements he (White) had made with salt companies outside of the association, and would like to arrange matters with him, giving the amount of their production, and stating that he would probably hear from them. Letters between the parties show that Mulkey was getting options for the National Salt Company. This related to some plants west of the Mississippi river. As bearing upon the relations of the parties we insert some of the correspondence:

Letter of January 6, 1900, Mulkey to White: "I saw Mr. Mulvane in Chicago last week, who says they are going to build in Michigan. Better settle with them if you can, on reasonable terms."

Letter of January 7, Mulkey to White: "While we very much prefer running, we believe under the circumstances, it would be well to close, but this of course is a matter for you to determine."

Letter of January 18, 1900, Mulkey to White: "We were in hopes when we became identified with your company in the purchase of stock, that we should be considered one of your company and not some one who was trying to take advantage of you, but every point seems to be fought out as though we were simply pirates in the field. We have had repeated propositions made to us to start people in the salt business, and propositions which would undoubtedly have made us good money, but we have discouraged everything all we could, as letters in our possession will show; in other words we are doing our very best to live up to the spirit of our agreement, and we regret very much that these misunderstandings are coming up all of the time, and we feel that the matter must be settled now once for all, and we want them settled before this contract is ratified."

Letter of February 9, 1900, Mulkey to White: "It seems to the writer that an effort should be made to stop the building of the plant at Port Huron. I understand that it is backed by Griggs and Cooper of Duluth, and this might be on account of their not being able to get association salt to sell. This is a very strong concern and has always been a menace to the business and once they are in they will be in to stay. I am very much afraid that the policy being followed out here is going to build up several different manufacturers, which in the end will be worse for us than we will gain by our deal, as the fight will be all the longer when it does commence. We feel that every effort ought to be made to prevent the building of every plant possible. I should like to talk this matter over fully with you when you come out."

Letter of October 11, 1900. Mulkey to White: "I had a long talk with Irvine & Wise today, and they were very much surprised to learn that our plant was shut down. I gave them a few facts, and I am satisfied it has put them to thinking; but unless they are getting somebody to put up all the money, it may deter them from building. On this account we think the closing might be of benefit in two ways."

Letter of November 12, 1900, White to Mulkey: "I have no doubt these repairs were necessary, but I see no reason why you should consume the time in making repairs, which we pay you for to curtail the production of salt."

Letter of December 22, 1900: "We have been repeatedly solicited to enter combinations which were very alluring, but have stood aloof as we felt that we wanted to do everything that we could to treat you fairly."

Letter of February 6, 1900: "If this is closed up we will then take up the mine matter, and if Fuller and his crowd do not care to purchase it, we will be glad to join with you in an effort to purchase the other Kansas rock salt mines and amalgamate the three. It is simply a matter of a little work, and I believe something very nice could be brought out of it for a side issue in salt. I believe this is a wise thing for all of us, in view of the fact that our evaporated interests and rock salt interests are likely to clash and bring about an ill feeling which we hope to avoid."

Letter of March 8, 1901, White to Mulkey: "So far as your plant is concerned, I understand that it is your desire that we pay the dead rental, as provided in the contract, while it is closed, which, of course, we will do."

Letter of March 11, 1901, Mulkey to White: "You have a contract by which you can close us down for a certain sum of money."

Letter of March 13, 1901, White to Mulkey: "If we cannot continue to do so, then there is but one course to pursue, and that is to ask you to shut down and we will pay the dead rental provided for in the contract."

Letter of May 10, 1901, Mulkey to White: "Your letter of the 8th inst. received. I have arranged to have the matter of selling salt taken up with Swift, and will advise you later of the results of my efforts. I should be glad if could give me some information as to what you think is the prospect for the National. I understand that the United Railway are now running under a receiver; of course I do not know to what extent they are going to be in competition with you. I shall be glad if you can give me the situation in general, and if you can I will treat it confidentially. I presume I see more of the prospective competition here in Detroit than anywhere else, but with the little plants that have been built, together with the Underwood and Swift, it would seem to me that competition is coming to life rather lively. As far as our company is concerned, we wish you to understand that we desire to stand

Digitized by Google

squarely with the National Salt Company and at any time we can be of service to you, we stand ready to do what we can."

Letter of June 15, 1901, Mulkey to White: "I met Swift's confidential man, Mr. Gardner, today. I learned that they have material on the ground for building derricks for their wells at Detroit. I suggested to him the advisability of making some kind of a deal for their salt for five years. He said they had not gone so far but that they could stop, and wanted me to name him an f. o. b. price, Detroit. I am inclined to think a deal could be made with them, but it would necessarily be at a low price, they having gone so far as they have, but the question is, would it not be better to sell salt at cost rather than have them enter the field as a competitor? They would undoubtedly manufacture more than their requirements and would market the surplus. Think this over, and if I can do you any good in any way I shall be glad to do so."

There was convincing evidence that Mulkey knew that the National Salt Company controlled the products of several, if not many, other salt producers, at Saginaw, Manistee, Ludington, and other places. This testimony seems to show that the National Salt Company was engaged in an attempt to get control of the salt market through contracts with producers, that it contemplated a limitation of production, and that the plaintiff not only knew it, but was willing to enter into contract relations to that end, at least so far as other plants were concerned. It knew of defendant's illegal methods, and it contracted to sell its salt to it, and consented to provisions which plainly made it possible for defendant to curtail plaintiff's production upon terms provided by the contract, which were, presumably, mutually satisfactory. But there is still further evidence.

Plaintiff's brief admits (page 4) that about this time the National Salt Company began negotiating for purchase of the Detroit Salt Company's plant, because the Michigan Salt Association had been invading its territory; so it proposed to injure the Michigan Association by selling salt in competition. We do not find anything in the nature of a contract to sell the plant, but a contract was drawn and dated July 28, 1899, and executed by both companies. It provided: First. That the National Salt Company should buy the salt produced by the Detroit Salt Company for five years, and pay, for first 300,000 barrels, 33 cents for No. 1 and 28 cents for No. 2; any excess over 300,000 barrels should be 15 cents; all to be delivered on floor of Detroit Salt Company's warehouse. Second. Upon 60 days' notice in writing, the Detroit Salt Company should suspend manufacture for the period stated in the notice, not exceeding six months in any one year, and during such suspension it should receive, as rental, a sum equal to 16 cents a barrel on its previous average daily production for three months. Third. If the National Salt Company failed to remove the salt, it was to pay 16 cents per barrel on the preceding average daily production as compensation for salt not manufactured. Fourth. Detroit Salt Company agreed not to increase the capacity of its plant. Fifth. It contained a provision for a penalty for failure to deliver to defendant all salt manufactured. Sixth. It licensed "exclusive name as trade mark and organization," etc. Seventh. It was further agreed that no stockholder should operate a factory, or sell salt. It was executed by both companies, and ratified and assented to by the stockholders. Plaintiff admits that this contract was illegal, but only in two particulars: (1) The agreement to shut down; (2) the agreement of stockholders. Being advised by counsel that this was illegal, the parties made further efforts to agree upon a contract.

Mr. Gray, plaintiff's counsel, prepared the contract upon which this action is based, but at what juncture does not clearly appear, as it was not executed until October, although dated July 28, 1899 Meantime, other contracts were made and executed. Exhibit 18. dated July 29th, was a lease of the plant for $35,000 rent. This also contained a promise binding the stockholders as before. It was signed by the parties. A supplemental contract, dated August 15th, was made and signed by the parties, referring to that of July 29th, which provided for many important modifications of said lease, which we need not discuss. But, as stated, in October the contract dated July 28th, drawn by counsel, was executed, upon the advice of counsel that it was a valid instrument. It is now treated by plaintiff as the contract, though there is reason to believe that the parties began business at once after the first contract was signed, under the oral, or preceding written, agreements, or both, viz., on or soon after July 28th. No reference is made to these other contracts in the new one, but it is inferable that they were superseded by the contract in suit; but they clearly show what the parties had in mind, and it is proper to inquire whether this last contract was not an attempt to put in legal form the provisions they had agreed upon, so far as possible, without showing their illegal design, leaving the illegal agreements to an oral understanding; or whether, on the other hand, these parties, on being informed that their proposed contract was illegal, abandoned an illegal and criminal enterprise altogether, and embarked upon a new, and different, and legal one, which contemplated no restraint of trade, or control of manufacture, or price of product. These circumstances and contracts justify the inference that the National Salt Company undertook to get control of the sale of the plaintiff's output of salt, with such restriction upon such output as would prevent an excess of over 300,000 barrels. All of the contracts are consistent with this theory, and it requires a degree of credulity that

we do not possess to believe that the National Salt Company abandoned its cherished purpose, for which, we doubt not, it was organized, or that the plaintiff believed it did.

It is contended that the evidence shows that the plaintiff's president was innocent of any knowledge of an intent to control production or prices of salt. He testified repeatedly that all he wanted to do was to sell plaintiff's salt, and some hearsay evidence was given that he so protested at the time of the transaction, and the jury has been induced to so find, notwithstanding the overwhelming evidence that, to accomplish the sale of his salt, he was willing to make these contracts, to write the letters, to counsel the shutting down of existing plants, and to aid in preventing the starting of new ones. No one would doubt for a moment that the pursuit of gain through the manufacture and sale of salt is the ulterior object of all these parties, and has been in all that they have done, but that fact is entirely consistent with their intentional combination to accomplish it by unlawful means and through illegal contracts. All of these things are consistent with defendant's claim. They are not consistent with a simple contract for the legitimate purchase and sale of salt. They indicate a strenuous effort to accomplish something out of the ordinary, and a business man who should act in relation to this matter upon any other assumption than that these parties had combined to control the price and production of salt would in our opinion be wanting in business prudence and sagacity. It is clear that this was accomplished so far as it could be, and at the same time protect the respective parties from one another, which both parties seem to have deemed necessary. A motion for new trial was made upon the ground of newly discovered evidence, and in support of it several important letters were produced. The failure to produce them on the trial was explained in a way, and, while we cannot criticise the learned circuit judge who refused to recognize this as a very strong reason for granting a new trial to defendant, whose officers must have had plenty of evidence in support of their claim at command, the letters are important, and if, as said in Richardson v. Buhl, 77 Mich. 632, 43 N. W. 1102, 6 L. R. A. 457, the courts should of their own volition take notice of illegal contracts, it was quite sufficient, in connection with the manifest disregard of the law by the jury, to warrant a new trial. These letters cannot be considered as a part of the evidence, but they still further corroborate the evidence already mentioned. On June 8, 1898, Mr. Mulkey, plaintiff's president, wrote a letter to White, defendant's president, in which he refers to negotiations with the association having ceased. We understand this to allude to the Michigan Salt Association, but we have no means of knowing what the nature of the negotiations were. This letter of June 8th suggested to White a proposition for a strong company to buy the coal-producing plants on the Detroit and St. Clair rivers (of which we understand plaintiff's plant to have been one) and at Ludington, and that this company buy the product from the sawmill manufacturers, and that the coal manufacturers could be the safety valve, and be "shut down" whenever necessary, and make their profits out of the sawmill people. His company was willing to join a company on that basis, but did not want to sell its plant and retire from business. He expressed a willingness to do some work in the way of securing options, and wanted the communication treated as confidential. He admitted that the supply of salt exceeded the demand, and that he knew that at that time the National Company controlled only New York and the Eastern states. The letter is as follows:

"Detroit, Mich., 6/8/99.

"Mr. A. S. White, Presdt National Salt Co., New York.

"Dear sir: All negotiations with the Association having ceased, what would you think of a proposition for a strong company to buy the coal producing plants on the Detroit and St. Clair rivers, and probably Skinner plant at Ludington, and this company buy the product of the saw mill manufacturers either direct from the manufacturers or from the Association itself. The coal manufacturers could be the safety valve and be shut down whenever it was necessary and make their profits out of the saw mill people. This might be done by organizing a new company, or the National might extend its wings this much farther. We would be willing to join a new company on this basis, or join with the National, if properly represented. We do not throw out the proposition with a view to sell our plant, and retire from the business, as we would not want to do that.

"If you think anything of the proposition, I shall be glad to meet you some place, and talk the matter over with you, and I would be willing to do some work in the way of securing options on the property. The salt trade is very active here; we believe all is being sold that is being manufactured, although at ruinously low prices.

"Kindly treat my suggestions confidentially, as I do not care to have them go any further, if you do not approve of the plan.

"Very truly yours, J. M. Mulkey."

On September 13, 1899, Mulkey wrote White:

"Chicago, Ill., Sept. 13, '99.

"My dear White: I had a conference with the A. T. & S. F. R. R. today. They are in hearty sympathy with our movement, and if we can control the salt outside of the Gould crowd, we will have this road at our backs. You must control the Morton plant and the balance will be easy.

"I had conversation today with Mr. Robins

Digitized by Google

of the Hutchinson packing company and they are extremely anxious to do anything, but they have given Mr. Morton (I think) an option for the purchase of their product. Is this for you? If so, advise me by wire at Hutchinson, as I do not wish to run counter to any of your agts. Mr. Robins said he would know in a week or ten days, and if this party did not take the salt, he would figure with me. I will learn more of this in Hutchinson probably.

"The Santa Fé people are extremely anxious for us to buy Barton out as he has been in the way for years, and I'm satisfied we can have all the protection we need.

"Very truly yours, J. M. Mulkey."

Again, on September 20, 1899, he wrote:

"Sterling Kansas, Sept., 20, 1899.

"My dear White: As I wired you, I am up against another Carter. When it came to the scratch, Barton brought up the fact that his brother was claiming an interest in his plant though 'twas not of record, and in reality he was not entitled to anything. Upon investigation I find the brothers have been threatening each others' lives and are at swords' points. My atty. said 'twould not do to accept title from the one, without a release from the other, as the fact that both were in possession, might make the title to the one hold good, notwithstanding it was not of record. So I have my atty. trying to get them together with some show of success.

"Had a talk with Vincent, but did not dare to talk to him of going east with me till I know what we do here. I learn that he is suspicious that I am out here to represent the Natl. Salt Co. He went to Topeka to consult Mulvane yesterday about it. Mulvane is just back from a month's outing in Mich., and knows of your negotiations. If Barton learns of my aims, the gig will be up.

"Truly yours, J. M. M."

It is said that the defendant chose to keep silent, and that its officers, who must have known the truth, sat in the courtroom and did not testify. We have no occasion to palliate their conduct. A man who will enter upon a business of this sort in violation of law, thereby becoming a criminal under the law, would not be likely to take the witness stand, and would be likely to claim the benefit of his privilege if called. The defendant is entitled to no especial consideration. It has had plaintiff's salt, and has not paid for it. Doubtless this fact made the jury unwilling to permit it to escape payment, and led them to ignore the legal rule that the law should not aid one by enforcing an illegal contract. Doubtless they look upon the promoter of such schemes as the more culpable, and sympathize with the manufacturers who, perhaps under coercion, or threats, or the sense of danger of ruin, yield and become parties to the scheme, either for profit or to avoid loss. We share this feeling, but the law recognizes no distinction, and will not aid one against the other in enforcing or carrying out their illegal contract. The decisions of the courts are uniform, and. in view of the increased prevalence of such contracts and combination, both Congress and the Legislatures of most of the states have made them criminal. The federal statute (26 Stat. 209, c. 647 [U. S. Comp. St., 1901, p. 3200]), punishes by fine and imprisonment those who engage in the making or carrying out of any contract in restraint of trade or commerce between the states or with foreign nations. Our own statute, Comp. Laws, § 11,377, declares illegal all contracts, agreements, understandings, and combinations entered into, or knowingly assented to. the purpose, object, or intent of which shall be to limit, control, or in any manner to restrict or regulate the amount of production, or the quantity of any article to be raised, or to enhance, control, or regulate the market price thereof, or in any manner to prevent or restrict free competition in the production or sale of any such article, and it punishes by fine and imprisonment every person who is a party to such transaction. We are not called upon to close our eyes to the prevailing business methods in these affairs, or to the business conditions which have shown the inadequacy of civil remedies and led to the enactment of penal statutes to prevent illegal business transactions. It is obvious that, so long as combinations in restraint of trade are profitable, there will be found those whose desire for gain will overcome their reverence for law, and even lead them to dare the dangers of criminal prosecution, and it is not unreasonable to suppose that in their contracts they will endeavor to give the appearance of lawful transactions. In making this contract before us, the parties had difficulty in avoiding illegal provisions, and if defendant is right about the case the safeguards of the contract are to be found in the provisions contemplating its breach. In a question of this kind it is proper to show the circumstances attending the making of the contract, the object and purpose in view, and the construction placed upon it by the parties, as evidenced by their dealings under it. Gregory v. Wendell, 39 Mich. 337, 33 Am. Rep. 390, citing Rumsey v. Berry, 65 Me. 574; Richardson v. Buhl, 77 Mich. 661, 43 N. W. 1102, 6 L. R. A. 457; Gregory v. Wendell, 40 Mich. 432.

It is contended that, when there is dispute and uncertainty as to the object, purpose, intent, and knowledge of the parties to a contract not illegal upon its face, the questions must go to the jury, and this is the rule. See Demary v. Burtenshaw's Estate (Mich.) 91 N. W. 647. But, where all of the evidence is consistent only with an unlawful object and purpose on the part of all parties to the transaction, it is otherwise. Such is this case, notwithstanding plaintiff's attempt to claim innocence by saying it was only attempting to sell its product, and its denial

Digitized by Google

of knowledge of defendant's purpose. Unfortunately its denial is proved false by the statements of its officers concerning what they did and knew, and, as already stated, while its ulterior object was to sell its salt, it is clearly proved that it was willing to do it through unlawful means and relations.

We have, then, a contract containing provisions uncalled for if this is a legitimate deal, but entirely consistent with the exigencies of an unlawful one. We have overwhelming and uncontradicted evidence of the character of the defendant, and its unlawful purpose and business, to which this and similar contracts were necessary, and to the furthering of which they were adapted. We think there is abundant evidence that the plaintiff's officers understood this, and were willing to lend themselves to the furtherance of the scheme, and this is not contradicted, unless Mulkey's denials are a contradiction, and these are so qualified and explained by the facts which he admits as to refute them.

Upon the cross-examination of plaintiff's president, he was asked if he did not know that the National Salt Company was a monopoly, and that it sought to control the market, and that it made other contracts with salt manufacturers, and his purpose in making this contract. It was competent to inquire fully into interviews and knowledge of the parties, to show the nature and purpose of the arrangement, to refute plaintiff's claim that it was unaware of defendant's character and purpose, and to show, by their dealings, the construction that the parties themselves placed on the contract.

We think that the circuit judge should have admitted the proof tending to show plaintiff's knowledge and participation, and that he should have directed a verdict for the defendant, upon the ground of plaintiff's complicity in an illegal and penal transaction. The judgment is therefore reversed, and a new trial ordered.

CARPENTER, J., did not sit. MOORE and MONTGOMERY, JJ., concurred.

GRANT, J. (dissenting). Plaintiff is a Michigan corporation, engaged in the manufacture and sale of salt. Its plant is located in Wayne county. Its capacity was about 900 barrels per day. It had been engaged in the business for eight years. Its corporators were W. F. Mulkey and his two sons, John and Owen, and one Button. John was president, W. F. the vice president, Owen secretary and treasurer, and Button the general superintendent.

The defendant is a corporation, organized in March, 1899, under the laws of the state of New Jersey; is engaged in the manufacture, purchase, and sale of salt, cooperage, etc., in the state of New York and other places. Its organizer was one Archibald S. White. Walter S. Eddy, of Saginaw, was its manager for Michigan, and Clarence M. Ireton was assistant manager. How many plants it owned does not appear, but it owned one in New York state, and subsequently acquired the ownership of at least one or more in Michigan. In June, 1899, it began negotiations with the plaintiff for the purchase of its entire product, at a certain price and for a certain period. White carried on the negotiations. Negotiations continued for some time; several contracts were drawn, and finally one was drawn, and submitted to the attorney for the plaintiff, by Mr. Mulkey. The attorney informed him that it was void under the anti-trust law of Michigan, because it provided for closing down their plant upon receiving 30 days' notice from the National Salt Company to do so, that the stockholders of the Detroit Salt Company agreed not to engage in the manufacture of salt east of the Mississippi river during the life of the contract, and that it agreed not to increase the capacity of its plant. These provisions were eliminated, and the contract which forms the basis of the present litigation was executed. It seems important to give this contract in full. It reads as follows:

"This agreement, made this twenty-eighth day of July, 1899, between the Detroit Salt Company, a corporation of Michigan, its successors or assigns, party of the first part, and the National Salt Company, a corporation of New Jersey, its successors or assigns, party of the second part, witnesseth:

"That for and in consideration of the sum of one dollar ($1) and other valuable considerations paid by the party of the second part to the party of the first part, receipt of which is hereby acknowledged, the party of the first part hereby sells to the party of the second part, their production of salt made at their works, situated on the line of the Wabash Railroad in Wayne County, State of Michigan, for the term of five (5) years, commencing on the first day of October, 1899, upon the following terms and conditions:

"I. For the first 300,000 barrels of salt of 280 lbs. each delivered per annum, 33c for each and every 280 lbs. of No. 1 Medium salt, and 28c for each and every 280 lbs. of No. 2 Medium salt, delivered on warehouse floor of plant of party of first part. For any salt manufactured in excess of 300,000 barrels, price shall be fifteen cents (15c.) per 280 lbs. of salt, delivered as aforesaid. Any dairy or table salt which may be required by second party will be furnished by first party within their capacity to produce same, at 45c per 280 lbs.

"II. Invoices for shipment shall be rendered promptly, and statements shall be rendered upon the last working day of each month for shipments made during that month. Payments therefor shall be made not later than the 15th day of the next month succeeding shipment for all invoices, except such invoices concerning which there may be a dispute as to quantity or quality, such in-

Digitized by Google

voices to be settled when adjustment has been agreed upon.

"III. Should party of the second part fail to remove salt hereby sold, in sufficient quantities so as to enable the party of the first part to run said plant to its full capacity, thereby necessitating the suspension of manufacture in all or any part of said plant; because of lack of storage room due to failure of party of second part to remove said salt, then five days after due notice in writing to second party of such failure, the party of the second part shall pay to the party of the first part, as liquidated damages, the sum of 16c per 280 lbs. of salt not manufactured in consequence thereof, for a period of time not exceeding six months in the aggregate in any one year; and for any time exceeding six months in any one year (dating from the date of this agreement) the sum of 32c per barrel upon estimated capacity of said plant or any portion thereof that may be closed down, in consequence of the failure of said party of the second part to remove salt as heretofore agreed. The capacity of said plant to be determined, by taking 150 barrels of salt of 280 lbs. each as an average daily production of each pan and multiplying the same by the number of pans idle, not exceeding six, however, that being the number in said plant.

"IV. It is distinctly understood that the party of the first part makes no obligation to deliver a specific quantity of salt, but they do agree to deliver to the party of the second part their entire production, and their failure to do so shall be settled by liquidated damages to be paid the party of the second part by the party of the first part of thirty-five thousand ($35,000) dollars per year.

"V. And the party of the first part does hereby license the party of the second part to the exclusive name as trade-mark, and to the organization of the Detroit Salt Company during the period of this contract.

"VI. Party of the second part agrees hereby to ship via Wabash Railroad the entire production of salt hereby purchased, providing the facilities furnished and the rate of freight made by the Wabash Railroad Company are as advantageous as those given by competitive lines, and the prevailing freight differential between Saginaw Valley points, Cleveland and Detroit, maintained. It is understood in this connection that any favorable privileges granted by the Wabash R. R. Co. and now enjoyed by the party of the first part, shall accrue to the advantage of the party of the second part.

"VII. The party of the first part agrees to assign all contracts for cooperage, specifically described in 'Exhibit A' hereto attached, to the party of the second part, and to sell to the party of the second part all cooper stock, bags and pockets that said party of the first part has on hand October 1st, at cost. Also to sell all salt on hand on October 1st, at the same price as stated in paragraph one.

"VIII. In the event of the destruction of the plant belonging to the party of the first part, as a whole, or in part, by fire or other cause, they shall have the privilege of rebuilding the same to its present capacity.

"It is understood that the price named herein is based upon the present price of fuel, which is $1.25 per ton for Pittsburg No. 8 coarse slack, and $1.10 per ton for Hocking coarse slack f. o. b., Detroit. Any advance in same is to be borne by the party of the second part, and any decline to accrue to their benefit."

The parties carried out the provisions of this contract until the 14th of March, 1901, when the warehouses of plaintiff were filled so that it was impossible for it to operate its plant. It therefore served notice upon defendant that its warehouses were filled, and that unless the salt was removed it would be obliged to shut down. The salt was not removed, the plant was shut down, and so remained until the commencement of this suit. The defendant paid the stipulated damages up to July 15th. During that time it had removed some salt for which it paid. On August 15, 1901, it failed to pay for the July shipment, or the stipulated damages, and on July 17th plaintiff commenced this suit by attachment, and levied on defendant's property, consisting of bags, cooperage, etc., at the plaintiff's works. The defendant gave a bond, and the property was released. With its plea of the general issue, defendant gave notice of certain alleged breaches of the contract.

The court instructed the jury as follows:

"The defendant does not deny that it entered into the contract, but sets up here, as a ground of defense, that this contract is entirely illegal; that the object of entering into this contract was to increase the price of salt; that in fact it was an agreement or understanding between the plaintiff and defendant, and that the result of this agreement or understanding was well known to the plaintiff and defendant both; that the result of this contract would be to increase the price of salt to the consumer; and that it was in violation of the laws of this state.

"Now, before proceeding further to discuss this case, or to charge you on this matter, I propose to call your attention to the provisions of the statute in this regard. The statute is as follows: 'That a trust is a combination of capital, skill or art, by two or more persons, firms, partnerships, corporations or associations of persons, or any two of them, for either, any or all of the following purposes: To create or carry out restrictions in trade or commerce, to limit, to reduce the production or increase or reduce the price of merchandise, or any commodity, to prevent competition in manufacturing, making, transportation, sale or purchase of merchandise, produce or any commodity, to fix at any standard or figure whereby its price to the public or consumer shall be in any manner

controlled or established, any article or commodity of merchandise, produce or commerce intended for sale, barter, use or consumption in this state.'

"Now, if, gentlemen of the jury, the intent and purpose of the parties entering into this contract was to produce any of the results mentioned in the statute, and which I have enumerated to you by reading from it—if this contract was for any of these purposes entered into between these parties, and both these parties knew it and understood it—that contract would be absolutely void, and the plaintiff could not, in this case, recover for any breach of that contract; this contract could neither be enforced in a court of law, nobody could be compelled to perform it, neither could either party recover from the other any damages on account of a breach of that contract. It is claimed, I say, by the defendant in this case, that this was the object and aim of that contract, that the National Salt Company was a large organization, doing business in various parts of the United States, and that, as such organization, it was its object and purpose to procure the outputs of other manufacturing establishments in the same line of business, so that it could manipulate or control the price at which the commodity produced by these companies should reach the consumer; and if you shall find that it was the object and purpose of the National Salt Company to bring about these results, and this contract was entered into, that was entered into, with that knowledge, and for the purpose of aiding them in the perpetuation of this result, then that knowledge or intent or purpose on the part of the plaintiff in this suit would be a participation in the results which the National Salt Company sought to accomplish; and, if they did this, it would be in violation of law, and, being in violation of law, would be absolutely void, as far as being a contract is concerned, and it could not be enforced, nor could anything be recovered for damages for the breach of such a contract.

"It is claimed on the part of the plaintiff that they entered into this contract with no such purpose, but that they entered into this contract for the purpose of selling their entire output of salt. They have a right to enter into a contract of that character; anybody has a right to sell the entire product of any manufacturing establishment that it may own, to anybody, at the best possible price they can get for it, and, if that is entered into simply for the purpose of disposing of their own goods at the most advantageous price they can obtain for them, it is not in any sense a violation of law. It is only a violation of law when the contract is entered into for the purpose of accomplishing certain results that will affect the rights of the general public, as far as the price is concerned, in obtaining that article in the open market. If, I say, they entered into this contract just simply for the purpose of selling their own goods, it would be a legal contract, and any breach of it by either party to it would be a subject that might be brought into court in the proper form of action, and for the breach of such a contract the parties might recover. But if this contract was entered into for the purpose of, and did have a tendency, or it was the object, to decrease the amount of this article produced, or to shut down the works, so that the article could not be produced, or by the shutting down of these works for any time, no matter how long, it would in any way affect, and it was for the purpose of affecting, the general price of this commodity, it would be a violation of law, and would be void; and if it in any sense had this effect, or was entered into for this effect, and was fraudulent in any respect, it would so taint the whole contract as to make the whole contract void."

Plaintiff recovered verdict and judgment.

1. The instructions of the learned judge, above quoted, are based upon the decisions of this court. Richardson v. Buhl, 77 Mich. 632, 43 N. W. 1102, 6 L. R. A. 457; Western Woodenware Co. v. Starkey, 84 Mich. 76, 47 N. W. 604, 11 L. R. A. 503, 22 Am. St. Rep. 686; and Clark v. Needham, 125 Mich. 84, 83 N. W. 1027, 51 L. R. A. 785, 84 Am. St. Rep. 559. In those decisions many authorities are cited sustaining the views therein expressed. There is no occasion here for a discussion of the principle or of the decisions governing contracts in restraint of trade, or to limit production, or to enhance prices. The sole contention of the learned counsel for the defendant is that the contract which forms the basis of this suit is conclusively shown by the evidence to be void under the statute of this state known as the anti-trust law, and void as well at the common law as a combination in restraint of trade. They insist, therefore, that the court should have directed a verdict for the defendant.

The controversy is between two corporations. The commodity which was the subject of the contract is one of the necessaries of life, and is used in every household. The feeling among the people is very general and very strong against combinations of the character here alleged. Jurors would naturally find against a contract clearly designed to enhance prices and limit the output of one of the necessaries of life. The defendant was represented upon the trial by able attorneys. The instructions of the court were clear and explicit that contracts of the character which defendant alleged this to be are absolutely void, and that if the jury found this one to be of that character they must find for the defendant. There is certainly no ground for saying that there would be a natural prejudice against the defendant, except that it may be said that persons do not look with favor upon a party who pleads his own turpitude, and his own intentional violation of law, as a defense to the violation of a contract he has solemnly made. The defense

Digitized by Google

interposed a reason which, if true, would tend to remove all prejudice upon that ground, viz.: It is claimed that plaintiff first violated the contract. The circuit judge was of the opinion that there was a conflict of evidence for the jury to pass upon. The jury did pass upon it, and found that the contract was legal. This court is now asked to set aside this verdict and judgment because there is no evidence to sustain them. A verdict based upon no evidence would, under such circumstances, be, at least, very unusual. The position taken has forced upon us a careful examination of the evidence. This is not a proceeding on the part of the government by quo warranto to annul defendant's charter, nor a proceeding in equity, where it is the duty of the court to examine the evidence and render a decree or judgment in accordance with the preponderance of evidence. If there is any evidence which fairly tends to support the validity of this contract, the question belonged to the jury, and not to the judges.

In the main brief for the appellant no claim or intimation is made that any provision is void upon its face. In their supplemental brief they say: "In paragraph 1 of the contract declared upon, plaintiff is to receive 33 cents per barrel for its salt in bulk up to 300,000 annually, and for any over that amount it is to receive 15 cents per barrel. Was not this provision a limitation upon production? Fifteen cents per barrel, from the evidence, appears a ruinously low price." Three hundred thousand barrels was the full output of plaintiff's plant at the time. Whether the price was ruinously low would depend upon the cost of production. Counsel do not cite us to any testimony in the record to show what it cost per barrel to produce the salt upon the warehouse floors of the plant. There is evidence that salt, about that time, was selling at $2 per ton in bulk. This court cannot take judicial notice that the price of salt was ruinously low. If the learned counsel intended to raise this point, it was incumbent upon them to give the court below, as well as this court, reliable proof of the cost of production. The mere fact that a price was fixed for the full output of the plant, and a lesser price for the amount produced in excess thereof, provided the company should see fit to enlarge its plant, is not evidence of an unlawful intent to limit the output. So far as the record shows, the profits, at the contract price, may have been very large. There is nothing unlawful in parties agreeing to pay so much per barrel, pound, or bushel for a certain amount of a product, and a less or greater price for that which is produced over that amount.

Counsel also state that the following provision renders the contract void: "And the party of the first part does hereby license the party of the second part to the exclusive name as trade mark, and to the organization of the Detroit Salt Company during the period of this contract." Counsel say: "A sale could be accomplished in a few lines. A sale could also be accomplished without the clause just quoted. We claim that the contract, construed by itself, provides for a combination of the capital, skill, and arts of the two corporations." If this be true, is it unlawful for two corporations to combine their capital, skill, and arts? Is it unlawful for one producer to sell his product to another? Counsel do not argue what the above language, "the license to the organization of the Detroit Salt Company during the period of this contract," means. We think it a fair construction to say that it means that the defendant was entitled to the use of the organization of the company in making sales of the salt purchased and to be delivered under the contract. It might be advantageous to the defendant to make such sales under the name and trade-mark of the organization of the plaintiff. We do not think it means that the defendant was entitled to take possession of the property and run the plant, or that the result was to place this foreign corporation in the place of the plaintiff in its relation to the laws of this state. The evidence discloses no attempt whatever upon the part of defendant to act upon this clause, whatever it may mean, except to use the trade-mark. Counsel insist that a provision like this was condemned in State ex rel. v. Standard Oil Co., 49 Ohio St. 137, 30 N. E. 279, 15 L. R. A. 145, 34 Am. St. Rep. 541. I have read the contracts in that case, and I find no provision whatever in them like this, and no similarity in the contracts involved in that case and this. The above statements, taken from the plaintiff's reply brief, are contained under the title "Analysis of the Evidence." Under the title "Argument," in the same brief, the questions are not discussed at all. The contract provides for the sale to the defendant of all plaintiff's product for five years, at a price based upon the average price for the three years preceding its date, to be delivered in plaintiff's warehouse, payments for the products shipped to be made each month. It stipulates liquidated damages for the violation of the contract by either of the parties. The law not only sanctions, but approves, such provisions, and it is not the province of courts to say whether the damages so stipulated are reasonable or unreasonable. If plaintiff violates the contract, it is to pay $35,000 per year. If defendant violates it, it shall pay 16 cents per barrel upon the capacity of the plant, estimated in the way therein provided, for the period of six months in any one year. There is nothing in these provisions indicating the purpose to enhance the prices or limit production. These provisions were legitimate, and are no evidence of intent to evade the law. Suth. on Dam. § 279. The severe penalty attached to a violation of the contract by either is very potent evidence of an intent to keep the plant running. It seems to me entirely

Digitized by Google

clear, therefore, that this contract upon its face is legal, and can only be held void by evidence aliunde the contract. Before discussing this evidence, it may be well to state some of the principles governing cases of this character.

A manufacturer may sell his entire product to another manufacturer, or to any one willing to buy. Two or more individuals may consolidate their business, and two or more corporations may do likewise. It is only when done with intent to enhance prices or to limit the output, or some similar wrongful purpose, that it comes within the inhibition of the law. It is not enough to render the contract illegal that the defendant intended to accomplish such illegal purpose. Plaintiff may even have known that the defendant intended to get control of all the salt manufactories in the country, and thus enable it to fix prices and limit the output, but this would not be sufficient to prevent plaintiff from selling its product or its plant to it. Both must participate in the intent. In Gregory v. Wendell, 40 Mich. 437, Justice Cooley stated the legal proposition thus: "Neither can any question exist that if one party to a transaction contemplates an actual purchase, or the other an actual sale, the transaction may be perfectly valid, irrespective of any illegal views or purposes that may have been indulged by the other." The same rule governs here as that which governs transfers of property with intent to defraud creditors.

Plaintiff made its case by proving the contract, its violation by the defendant, and plaintiff's damage. This damage consisted of two elements, first, the salt which defendant had received and not paid for, and, second, the stipulated damages resulting from defendant's failure to remove the salt, in consequence of which plaintiff was compelled to shut down its plant. The onus probandi was upon the defendant to prove the illegality of the contract. When one sets up his own turpitude and fraud as a defense to a contract he has deliberately made, it is certainly incumbent upon him to establish its illegality by clear proof. Defendant's manager sat in the courtroom during the progress of the trial. He had knowledge of all the facts which, if the defense be true, would clearly establish the illegality of the contract. Its president, White, who negotiated the contract, could have been produced. Neither chose to testify. Under such circumstances, the evidence is rightfully construed most strongly against the defendant. A party litigant cannot claim the consideration of a court or jury when he sits by, with the knowledge of the facts locked up in his breast, and chooses not to disclose them for the guidance of the court and jury.

Defendant sought to establish the illegality of the contract by the cross-examination of plaintiff's witnesses, by their contracts previously prepared, by certain letters which passed between Mr. White, the defendant's president, and Mr. Mulkey, the plaintiff's president, and by the fact that the price of salt advanced afterwards. No notice of this defense was given in the pleadings. No such defense was intimated until the cross-examination of plaintiff's president. The court at first ruled the defense to be inadmissible under the pleadings, but, when his attention was called to the ruling in Richardson v. Buhl, the defense was admitted.

One or more prior contracts had been prepared and signed by the officers of plaintiff and defendant. They contained terms which rendered them void under the law, for the reasons above stated. When the previous contract was submitted to plaintiff's attorney, he advised it that it was illegal, specifying the reasons. The defendant's attorney, on cross-examination of plaintiff's officers, questioned them very searchingly as to the purpose, motives, and intent in executing this contract, and as well the previous contracts. They testified that the sole purpose was to effect a sale of the product of their plant, that they had no other object in view, and that they did not intend any violation of the law. Mr. Mulkey, plaintiff's president, testified that it was the distinct understanding, when the contract was made, that their works should run continuously; that, when the contract was made, it was not entered into with the expectation of limiting the production of plaintiff's plant; that they never saw any contract made between the defendant and any other company, and did not know the contents of any, though he knew that they were seeking contracts. That it was understood that plaintiff's plant should be run to its full capacity appears from a letter of defendant's Michigan manager, dated November 8, 1899, in which he said: "Our agreement with you is to keep you free of salt, so that your works can run to the full capacity, and to do this, you must arrange to load more than one car of bulk salt per day."

None of plaintiff's stockholders owned any stock in the defendant company at the time. Some of them bought afterwards in the open market, and subsequently sold it. There is nothing in this record to show that plaintiff or its stockholders expected to profit in any other way than by a sale of the product of plaintiff's plant. Their attorney, W. J. Gray, of Detroit, advised the plaintiff that its prior contract was void, and he drew the one now in suit, and advised it that it was lawful. Mr. Gray's testimony as to what Mr. Mulkey then said is as follows: "When I told Mr. Mulkey that this contract [the previous one] was illegal, he said that what he wanted to do was to sell his salt, and, if there was not anything objectionable in our laws to the making and selling of salt, he wanted me to draw him a contract which would permit him to do it in a lawful way. I accordingly drafted those clauses so as to eliminate the features which in my opinion were objection-

able to our laws, and the contract offered in evidence here, and the one which is sued upon, practically contained the changes which I suggested. Mr. Mulkey said he wanted to comply with the law, and he didn't want to make a contract which was against the law, and he came to me, so that I would let him make a contract which was all right under the law." Mr. Mulkey testified as follows: "I had no other purpose in making this contract with the National Salt Company than to sell my salt for the best price I could obtain. Q. Did you have anything to do with the management of or business of the National Salt Company in any way? A. No, sir; I had no connection with them; I had nothing to do, either at the time of making this contract or afterwards, with fixing the price that the National Salt Company should sell their salt for. We had no other purpose in putting the clause into the contract, referring to stipulated damages, other than to compensate us, by way of damage, if they did not remove their salt. It was no purpose of the Detroit Salt Company to raise, lower, or control the price of salt, in the future. It was no purpose of mine or of the Detroit Salt Company. Mr. White did not inform me what he was doing in connection with other plants. I knew he was negotiating, but I had no knowledge how far along he was, or that he would succeed in making any. It was no concern of ours, one way or the other, so long as we got what they agreed to pay us." At the date of the contract the price of salt was 45 cents per barrel. This price included the barrel, which cost about 18 cents. In a few months thereafter it reached 85 cents. It afterwards dropped to 70 cents, and then to 50 cents. Such fluctuations often occur in other commodities. Of itself, it is not conclusive that the purpose of the contract was to enhance the price. Plaintiff was not benefited by the advance; it received the same price for its product whether the market price went down or up.

There was no evidence to show how many salt companies there were in the United States. During the progress of the trial, counsel for defendant stated to the court that he could show that this contract (meaning, unquestionably, a similar one) was entered into by hundreds of other companies, not only in this state, but in almost all the states of the Union. The statement was not made good. Plaintiff's witnesses had no knowledge of the subject except by hearsay, and did not know to what extent any similar contracts were made by the defendant and others. The defendant introduced no proof on the subject, although its manager, Mr. Eddy, as above stated, was in the courtroom during the trial, and Mr. White at its command.

That these parties signed an illegal contract is not conclusive evidence that they could not make a legal one, or that the subsequent contract entered into by them, valid upon its face, is illegal. The contention on the part of the plaintiff is that the prior contracts were made in the belief that the propositions therein contained were legal, but that, as soon as it was advised they were illegal, they were abandoned.

The purchase of some of the stock of the defendant company in open market by some of the stockholders of the plaintiff company, after this contract was executed, is not conclusive, if it is any, evidence of a purpose to make an illegal contract.

I do not think it can be said under this record that there was no evidence to support the validity of this contract, and that its invalidity was established beyond question. I deem it unnecessary to set forth in full the letters upon which the defendant very largely relies. Of those introduced, five were written before the contract was executed, not one of which in terms refers to a contract between the parties. Others were written after the contract was executed. The letters to which some of them are replies are not produced. Of those produced, some relate exclusively to the purchase of a salt property in Kansas, which Mr. Mulkey was evidently attempting to negotiate for Mr. White or his company. Others show that Mr. Mulkey suggested to Mr. White the propriety of attempting to prevent the erection of certain proposed plants, and of buying producing plants on the Detroit and St. Clair rivers. Mr. Mulkey was rigidly examined and re-examined on these letters, and his explanation thereof given to the jury. They are not, in my judgment, conclusive. Parties engaged in manufacture or business of any kind commit no legal wrong in attempting to prevent the erection of competing plants. Mr. Mulkey's efforts to assist Mr. White in securing the purchase or output of other plants does not per se stamp the contract between these two corporations as illegal and void. All the letters, contracts, prior and subsequent acts, and the entire conduct and relations of the parties, were competent evidence to throw light upon the character of the contract. The court gave full opportunity to the defendant to make good its defense, but it chose to throw no light upon the controversy by disclosing facts within its own knowledge. I think the questions belonged to the jury, and not to the court, to determine.

2. On the cross-examination of Owen W. Mulkey, the secretary and treasurer of the plaintiff, he was asked, "Do you know what was the purpose for which you made this contract?" The court sustained the objection to the question, and error is assigned. At that time there had been nothing to indicate that the defendant proposed to set up the defense now made. Neither in the pleadings nor the proofs had anything appeared to indicate the defense. After the defense was admitted the witness was recalled, and other witnesses for the plaintiff were fully questioned as to the purpose of the contract.

There are other assignments of error in

Digitized by Google

the rulings upon the testimony, but we find no error in them, and do not consider them of sufficient importance to discuss.

3. Defendant propounded the following special question for the jury: "Did the plaintiff, the Detroit Salt Company, refuse to deliver the salt, cooperage, sacks, and other personal property to the National Salt Company, situated in or on the plant of the Detroit Salt Company, prior to 12 o'clock noon on the 17th day of August, 1901?" The court refused to submit it, for the reason that under the evidence it could not be answered by "yes" or "no." It was conceded that plaintiff refused to deliver certain sacks and some other personal property until it was paid for the salt which had been already shipped. But the salt had already been delivered upon the warehouse floor. The salt referred to in the question was that loaded in the cars and ready for shipment. Defendant claimed plaintiff refused to allow it to be shipped. Plaintiff denied it. But if the jury should have found that the plaintiff had so refused, this would not be a violation of the contract sued on in this case. The shipments had been provided for by another contract subsequently entered into, which provided that it had nothing to do with the contract of July 28th. Shipments were not, therefore, made under the contract in suit, but on the one not at all involved here. The refusal to surrender the sacks and other personal property was no violation of the contract here in suit. The contract did not cover this property. Demand was not made under it. The property belonged to defendant, and was lawfully in plaintiff's possession until demand was made and possession refused. This rendered plaintiff subject to an action of replevin or trover.

4. Defendant made two motions for a new trial, the last based upon newly discovered evidence, consisting of three letters written by Mr. Mulkey, the president of the plaintiff, to Mr. White, which it had found among its papers after the trial. These motions were overruled, and we think correctly. No sufficient search for these letters was made, before the trial, to form the basis for granting a new trial on the ground of newly discovered evidence. Besides, as already stated, the defendant was not entitled to any favors by the court, inasmuch as it saw fit upon the trial to withhold evidence of the purposes of this contract, if it were such as it claimed to be. Had it done so, there might have been no occasion for its motion for a new trial.

Judgment should be affirmed.

NEAL v. MORSE et al.

(Supreme Court of Michigan. July 14, 1903.)

JUSTICE OF THE PEACE—ILLEGAL FISHING—SEIZURE OF NETS—JUDGMENT.

1. Comp. Laws 1897, §§ 5754, 5755, authorize the seizure of fishing nets in unlawful use, and contemplate a trial of the action as to whether they have been taken in such use and whether they should be condemned. The docket entry of a justice stated that a defendant pleaded guilty to the charge in the complaint for illegal fishing, and was fined a certain sum, with costs, and the nets seized were ordered to be confiscated, without any indication of any trial of the question involved. *Held*, that the judgment was coram non judice, and was no defense to the game warden executing the same.

Error to Circuit Court, Bay County; Theodore F. Shepard, Judge.

Action by John Neal against Grant M. Morse and Theodore Trudell. There was judgment for plaintiff, and defendants bring error. Affirmed.

Horace M. Oren, Atty. Gen. (George S. Law, of counsel), for appellants. Porter & Haffey (John E. Simonson, of counsel), for appellee.

MONTGOMERY, J. The defendants are respectively state game and fish warden and deputy. The deputy seized certain pound nets in possession of the plaintiff, and, by direction of the warden, destroyed the same. This action is brought to recover the value of these nets. The plaintiff recovered, and the defendants bring error.

The question presented is whether a judgment had passed authorizing the defendants to destroy these nets. If any such judgment was passed by a court having jurisdiction of the matter, appellants' counsel are entirely right in their contention that such judgment cannot be attacked collaterally. The statute in question is Act No. 28 of the Public Acts of 1887, as amended by Act No. 110 of the Public Acts of 1893, being sections 5754 and 5755 of the Compiled Laws of 1897. These sections were before the court for construction in Osborn v. Charlevoix Circuit Judge, 114 Mich. 655, 72 N. W. 982. We held in that case that the act in question authorizes the seizure of the nets in unlawful use, and contemplates a trial of the question as to whether they have been taken in unlawful use, and as to whether they should be condemned in the same proceeding in which the offender is tried for an infraction of the law. We held also that the law does not declare that property found in illegal use shall be forfeited, but that it does authorize destruction of such property within the discretion of the justice who tries the offender, and that this manifestly requires a judicial determination by the justice of the illegal use, and a discretion as to the disposition of the property.

In the present case the docket entry of the justice reads as follows: "The People of the State of Michigan vs. John Neal. Offense, violation of fish and game laws. Complaint in writing made October 17th, A. D. 1901, by Theodore Trudell, on oath, and warrant issued returnable forthwith. Warrant returned October 18th, A. D. 1901. Duly served by Joseph W. Hutchinson, constable, and de-

Digitized by Google

fendant in court. Defendant John Neal arraigned in open court, plead guilty to the charge set forth in said complaint as recited in said warrant of arrest, which was read to him by me, the said justice, Charles F. Craw. On which day after hearing the evidence the court finds that the said John Neal was guilty as charged in said complaint, and I did therefore adjudge and determine that the said John Neal should pay a fine of $8.00 and costs, and pound nets seized from said John Neal by said Theodore Trudell be condemned and confiscated and ordered disposed of by the game and fish warden of this state. Fined $8.00. Constable's cost, $9.00. Court costs, $3.00. Total, $20.00."

It appears in evidence that there was a written complaint made against Neal charging him with a violation of the statute in fishing in the Quanicassee river, and a warrant issued upon that complaint; that there was also on the day previous a so-called complaint for seizure, in which the complainant prayed that the pound nets be condemned and confiscated, but, so far as appears, no warrant was issued upon this complaint for seizure. There was an independent order of condemnation, not entered upon the docket, which, aside from certain technical defects, appears to have been based upon an ex parte examination under oath of the complainant, and does not indicate that any trial of the questions involved was had in any form; so that the only judgment upon which defendants can rely as a justification is that embodied in the docket entry.

It may be further stated that this docket entry is not aided by proof of independent facts. On the contrary, the evidence indicates that no information was afforded the defendant that the question whether these nets should be condemned was being tried; although, as before stated, if the docket entry shows a valid judgment, that judgment may afford protection to the defendants in this collateral proceeding. But we are constrained to hold that, so far as the docket entry shows a condemnation and confiscation of the nets in question, the judgment is coram non judice. The judgment recital is that the defendant Neal was arraigned in open court, and pleaded guilty to the charge set forth in the complaint and warrant of arrest; that on the same day, after hearing the evidence, the court finds that the said John Neal is guilty as charged in said complaint, and proceeds: "I did therefore adjudge and determine that the said John Neal should pay a fine of eight dollars and costs, and pound nets seized from said John Neal by said Theodore Trudell be condemned and confiscated and ordered disposed of by the game and fish warden of this state."

Without pausing to discuss the form of this judgment as to the order of disposal, the infirmity—which is manifest at a glance—is that there is nothing to indicate that the defendant in that proceeding had his day in court upon the question of whether these nets should be condemned. There is no pleading in the case, no complaint read to him involving the question, he is not called upon to give evidence upon it, nor, so far as the record shows, was any evidence adduced by the people upon that subject.

We think that upon the face of the judgment entry the justice was without jurisdiction to render such a judgment. It follows that the judgment below should be affirmed, with costs. The other Justices concurred.

SHERRARD v. CUDNEY.

(Supreme Court of Michigan. July 14, 1903.)

ADVERSE POSSESSION — INSTRUCTION — EVIDENCE—RECORDED SURVEY—ADMISSIONS OF DEFENDANT.

1. In trespass for cutting trees, admissions made when the survey of the property was made by defendant, who was one of the chainmen engaged in making the same, were competent evidence.

2. A survey recorded in the office of the county surveyor on two separate pages of the book of surveys, if shown to be connected together as the recorded survey made by the surveyor, is admissible in evidence under How. Ann. St. § 619, providing for the record of surveys by the county surveyor.

3. A charge that adverse possession must be based on something else than silent permission of improvements by a party who has not acted in bad faith or done any act which the other party had a right to regard as binding on his conduct, but that it must be clearly shown, and must be actual, continued, visible, notorious, distinct, and hostile, was erroneous, as leading the jury to believe that more was required of defendant than is necessary under the law.

Error to Circuit Court, Shiawassee County; Stearns F. Smith, Judge.

Action by William Sherrard against L. G. Cudney. From a judgment for plaintiff, defendant brings error. Reversed.

Watson & Chapman and W. J. Parker, for appellant. John T. McCurdy, for appellee.

MOORE, J. This is an action by plaintiff for trespass for the cutting of certain trees on the south half of the northwest quarter of section 2 in the township of Caledonia, owned by the plaintiff. Defendant purchased the land adjoining plaintiff on the south, receiving his deed March 14, 1880. He claimed that on February 23, 1880, he cut a line through, and built a brush fence as establishing the line between his farm and the one now owned by the plaintiff; that he has been in the open, visible, and adverse possession of the land on the south up to the fence for more than 20 years; that 13 years ago last February he built a rail fence in the place of the brush fence, and has cultivated fields right up to this fence, on the east part of the farm, and occupied the balance as a wood lot. It is also the claim of defendant that the fence is on the true line;

Digitized by Google

that, when the brush fence was built, the surveyor's stake was found at the east end, and the fence was built west from that stake to a surveyor's stake at the west end. It is the plaintiff's claim that the fence was not on the true line, but at its west end was about 28 feet too far north, as shown by a survey made in 1895, and that the trees cut were north of the true line and on plaintiff's land, though south of the fence; and that defendant had not acquired title by adverse possession.

Judging from the record the trial was not a very orderly one. There was more talk between counsel, and between the judge and counsel, than was seemly. Many assignments of error are made. We have considered them all, but shall not discuss them all.

Error is assigned as to the admissions made by defendant when the survey was made in 1895. Mr. Cudney was one of the chainmen who participated in making the survey. He is also a party to this litigation, and for that reason we think the testimony competent; but he was entitled to an instruction as to the effect of what he said, according to the rule laid down in Burns v. Martin, 45 Mich. 22, 7 N. W. 219.

Error is assigned as to the admission of a survey recorded in the office of the county surveyor, said to have been made by Lyman Mason in 1879. It is claimed on the part of the plaintiff that the diagram on page 236 and the notes on page 237 constitute Mr. Mason's survey. Upon page 236 there are entries relating to a survey made in 1895, which of course could not have been part of the survey made by Mr. Mason. Counsel say this portion of the exhibit was not offered in evidence. With these entries eliminated, if the two pages are shown to be connected together as the recorded survey made by Mr. Mason, I think it competent to admit them under section 619, How. Ann. St.

Error is assigned upon the refusal of the judge to give defendant's requests to charge, and upon the charge as made. We have already referred to one instruction which the defendant was entitled to have given to the jury in case he had acquired title by adverse possession. We have already said the defendant claims he occupied up to the fence, claiming to be owner of all the land south of the fence; that the east portion was cultivated to the fence, and that west of the cultivated portion the land was used as a timber lot in the way such a lot is ordinarily used by the farmer.

Among other things, the trial judge instructed the jury as follows: "Now, possession, as I have stated to you, must have been actual; that is, possession pedis positio—the placing of the foot. He must have had control, been on it, and had possession of it continuously; that is, he could not have possession for one year, quit a year, go on a year; and call that continuous possession. That would not be continuous. Visible acts of the possessors must be open, not clandestine, but a subject of observation to any one around in the vicinity. It must be notorious. It must be such that every person could understand it; nothing secret about it; open, notorious possession. It must be distinct; that is, it must mark out the boundaries of the land claimed to be possessed distinctly, so there can't be any dispute about what he possesses. To illustrate that: A highway is sometimes acquired by user, although not regularly laid out. If a highway is laid out in this state, it is laid out to a certain width, I think 66 feet wide—four rods; and, if the highway is a highway by being laid out, then it would be that width or the width at which it was laid out, whether it was used or not; but, if it becomes a highway by user, then only the part of the ground along there which has been used by the public as a highway becomes a highway by user, whether it is crooked or straight. If there is a fence along the edge of it, or if to where we claim the highway, still it would not affect it at all, because only that part which is used by the public is a highway. I speak of this as an illustration. The possession must be hostile; that is, adverse to everybody or anybody that could claim an interest in opposition to it. A man comes into possession of land under an agreement to enter in there; it can't be hostile possession; it must be a possession hostile, that says, 'I own this land; this is my land; I claim it against all the world.' * * * As I said, adverse possession is founded upon the doctrine of estoppel, and estoppel, when allowed, must be based on something else than the silent permission of improvements by a party who has not acted in bad faith or done any act which the other party had a right to regard as meant to bind his conduct. Adverse possession must be clearly shown, and not left to inference. Where title is claimed by an adverse possession for the statutory period of fifteen years, it should appear that the possession had been actual, continued, visible, notorious, distinct, and hostile. Adverse possession, to give title, must be an actual, continued, visible, notorious, distinct, and hostile possession, and a finding of adverse possession must be based upon facts which show in explicit terms a state of facts that will satisfy the legal definition. * * *"

This portion of the charge was not a correct statement of the law, and was well calculated to give the jury the impression that more was required of the defendant than the law requires. The rule as to adverse possession is correctly stated in Sauers v. Giddings, 90 Mich. 50, 51 N. W. 265; Henry v. Henry, 122 Mich. 6, 80 N. W. 800; Pugh v. Schindler, 127 Mich. 191, 86 N. W. 515.

Judgment is reversed, and new trial ordered. The other Justices concurred.

Digitized by Google

PEOPLE v. PORTENGA.

(Supreme Court of Michigan. July 14, 1903.)

CRIMINAL LAW—ALIBI—INSTRUCTIONS.

1. An instruction telling the jury to "scrutinize any evidence in relation to the alibi. An alibi is a defense that is easily proved, and hard to disprove; therefore you will be careful and cautious in examining the evidence bearing upon the question of alibi"—did not instruct the jury to discredit the defendant's testimony, nor did it indicate to them that they should be controlled by any supposed view entertained by the court.

Exceptions from Circuit Court, Muskegon County; Fred J. Russell, Judge.

John Portenga was convicted of an assault with intent to commit rape, and appeals. Affirmed.

F. W. Cook, for appellant. George S. Lovelace, Pros. Atty., and Chas. B. Cross, Asst. Pros. Atty., for the People.

CARPENTER, J. Defendant was convicted of committing an assault with intent to commit the crime of rape. His defense was an alibi. He asks to have the conviction set aside on the ground that the court erred in charging the jury as follows: "The defense in this case, gentlemen—one of the defenses introduced here, or a train of circumstances that has been presented here—tends to show an alibi of the defendant here, as claimed by the defendant. That is a defense which is legitimate. If it is true that this defendant was not in a condition so that he could have committed the crime, that should be a perfect defense, and would be a perfect defense; but in the consideration of that class of defenses, gentlemen, it is necessary for you to take into consideration the facts, and it is your duty as jurors to examine carefully the evidence given on that point—scrutinize any evidence in relation to the alibi. An alibi is a defense that is easily proven and hard to disprove; therefore you will be careful and cautious in examining the evidence bearing upon the question of alibi. I say, if it is established, and you believe the evidence—in other words, if you believe this party was in a position so that he couldn't have committed the crime—of course that would be an absolute defense."

It is insisted that the court erred in telling the jury to "scrutinize any evidence in relation to the alibi. An alibi is a defense that is easily proven, and hard to disprove; therefore you will be careful and cautious in examining the evidence bearing upon the question of alibi." This language did not instruct the jury to discredit the defendant's testimony, nor did it indicate to them that they should be controlled by any supposed view entertained by the court. It simply cautioned the jury to carefully examine that testimony. Cases might arise in which it would be unnecessary, and perhaps improper, to extend such a caution; but, as the record in this case does not contain the testimony referred to, we are bound to assume, under the authority of People v. Tice, 115 Mich. 219, 73 N. W. 108, 69 Am. St. Rep. 560, that this was a case in which it was proper to extend it.

The exceptions of defendant are therefore overruled, and the court directed to proceed to judgment. The other Justices concurred.

BLUMENTHAL v. BERKSHIRE LIFE INS. CO.

(Supreme Court of Michigan. July 14, 1903.)

INSURANCE — ACTIONS ON POLICY — INSTRUCTIONS — MISQUOTATION OF APPLICATION — REPRESENTATIONS IN APPLICATION.

1. It was not the duty of insured, when applying for insurance, to advise the company, in answer to a question concerning his consultation with physicians, of every time that he had consulted a physician for a temporary indisposition, but only of the times of consultations relative to a serious ailment.

2. In an action on an insurance policy, a charge quoting a question asked of insured in his application as to whether he had ever had chronic "or" persistent hoarseness, as chronic "and" persistent, did not change the sense of the question, and was not error.

Error to Circuit Court, Ogemaw County; Nelson Sharpe, Judge.

Action by Philip Blumenthal against the Berkshire Life Insurance Company. Judgment for plaintiff, and defendant brings error. Affirmed.

F. L. Snodgrass (T. A. E. & J. C. Weadock, of counsel), for appellant. Ross & Harris (Simonson, Gillett & Clark, of counsel), for appellee.

MONTGOMERY, J. This is an action on an insurance policy issued on the life of Nicholas I. Blumenthal. The defense interposed was false representations and warranties made by the insured in his application for the policy. The particular questions claimed to have been falsely answered, together with the answers given in the application, were the following: "No. 15. Have you ever had chronic or persistent cough or hoarseness? A. No. No. 16. State particulars of any illness, constitutional disease, or injury you have had, giving date, duration, and remaining effects, if any. A. No disease or illness of any kind. No. 17. When did you last consult a physician? A. About a year ago. Q. For what? A. Cold and cough. No. 21. Give names and addresses of physicians who have attended you? A. C. L. Nauman, M. D., West Branch, Michigan."

It is argued at length by counsel for the defendant that the evidence conclusively shows the assured was suffering from a chronic and persistent cough for a considerable period before the application; that he had, within the period of a year, consulted physicians other than Dr. Nauman; and that his answers to each of these questions were

¶ 1. See Insurance, vol. 28, Cent. Dig. § 691.

Digitized by Google

shown to be untrue. It would not be of profit to set out at length the testimony bearing upon the question as to whether the ailments which the assured is shown to have had were such ailments or diseases as to seriously affect the general soundness and healthiness of the system, or whether, on the other hand, it was a mere temporary indisposition, not tending to undermine the constitution of the insured. An examination of the record discloses that this question of fact was sharply controverted at the trial, and that there is abundant evidence that, on the occasions when the assured had consulted physicians, the trouble under which he was laboring was temporary, and yielded to treatment. The law is settled that in a representation, contained in an application for insurance, that the assured is in good health, or that he has not been subject to illness, or that he has not been attended by a physician or consulted one professionally, the answer is to be construed as meaning, in the one case, that he has not suffered an illness of a serious nature, tending to undermine the constitution, and that a state of health is freedom from disease or ailment that affects the general soundness or healthiness of the system seriously. And as to representations as to treatment by physicians, the omission to state a treatment by a physician for some temporary indisposition does not avoid the policy. See Brown v. Ins. Co., 65 Mich. 306, 32 N. W. 610; Pudritzky v. Supreme Lodge, 76 Mich. 428, 43 N. W. 373; Hann v. Ins. Co., 97 Mich. 513, 56 N. W. 834, 37 Am. St. Rep. 365; Plumb v. Ins. Co., 108 Mich. 94, 65 N. W. 611; Tobin v. Ins. Co., 126 Mich. 161, 85 N. W. 472; Conn. Ins. Co. v. Trust Co., 112 U. S. 250, 5 Sup. Ct. 119, 28 L. Ed. 708.

Following this line of cases, the circuit judge charged the jury as follows: "Now, as I have said to you, it is not the duty of an applicant for insurance to advise the insurance company of every time he consults a physician for some temporary indisposition; but it is his duty to advise them, in answer to that question, every time that he has consulted a physician relative to any serious ailment, such as I have spoken of; and, if you find that the disease with which Nicholas I. Blumenthal was then suffering was such a disease as would affect his general health, then it would be his duty to have advised the company that he had been attended by Dr. Witter." Error is assigned upon this instruction, but we think it was clearly within the rule as above laid down.

Error is assigned upon a portion of the charge in which the circuit judge referred to question No. 15, above quoted, and stated the question which was asked to have been, "Have you ever had chronic and persistent hoarseness?" It is argued that the substitution of the word "and" in place of the word "or" in the question as put to the applicant changed the sense of the question, and an effort is made to show some marked distinction between the words "chronic" and "persistent," as used in this sentence. We think the effort has not been marked with success. The word "or" is not always disjunctive. It is sometimes interpretative or expository of the preceding word. So, it is often used in the sense of "to wit," "that is to say." We think it was so used in this sentence, and that as used in this connection the two words are or were intended to be used in the same sense, the word "chronic" being defined, in effect, as meaning "persistent." See 21 Am. & Eng. Enc. Law (2d Ed.) p. 936, and cases cited in note 5; Powell v. Race Course Co., 2 Q. B. 242.

Other errors are assigned, all of which have been considered, but, except as they are covered by the foregoing discussion, we do not find that they call for further consideration. We are satisfied that no substantial error was committed to the prejudice of defendant, and the judgment will be affirmed, with costs. The other Justices concurred.

McCLOSKEY v. SCHOOL DIST. NO. 5 OF WHEATLAND TP.

(Supreme Court of Michigan. July 14, 1903.)

TEACHERS—CONTRACT—CERTIFICATE.

1. Under Comp. Laws 1897, § 4812, providing that school officers shall not contract with any one to teach who has not a certificate in force, a contract of employment made with one not having at the time a qualifying certificate is not binding, though the person employed obtains a certificate before the time stipulated for the teaching to commence.

Error to Circuit Court, Mecosta County; Lewis G. Palmer, Judge.

Action by Edna McCloskey against School District No. 5 of Wheatland township. Judgment for defendant. Plaintiff brings error. Affirmed.

M. Brown and A. B. Cogger (A. Broomfield, of counsel), for appellant. Joseph Barton (Crane, Norris & Drew, of counsel), for appellee.

CARPENTER, J. March 4, 1901, the parties to this suit entered into a written contract by which said defendant (a graded school district in Mecosta county) employed plaintiff to teach its school for nine months, commencing September 2, 1901, at a salary of $30 per month. At the time this contract was made, plaintiff had a third grade teacher's certificate authorizing her to teach school in the county of Mecosta for the year ending June 29, 1901. July 31, 1901, the trustees of the defendant school district canceled said contract with the plaintiff, and at once notified her of their action. August 24, 1901, plaintiff procured another certificate authorizing her to teach school in the county of Mecosta for the year ending August 24, 1902. September 2, 1901, plaintiff presented herself at the schoolhouse of the defendant district, and sought to perform her contract. Defend-

Digitized by Google

ant refused to permit her to do this, and plaintiff brought this suit to recover damages. The cause was tried without a jury. The court made a finding of facts, from which the above statement is taken, and rendered judgment for the defendant, on the ground that, at the time the contract was canceled, plaintiff "held no certificate authorizing her to teach in the schools of [Mecosta] county, and was therefore not a qualified teacher."

We think the case of O'Leary v. School District, 118 Mich. 469, 76 N. W. 1038, justified this decision. Plaintiff in that case was employed to teach school three months, commencing September 21, 1896, with an agreement for a further employment of five months if she gave satisfaction. After teaching the three months, the board hired another teacher, and advised plaintiff that her services were no longer required. Her certificate from the board of school examiners expired March 28, 1897, or about two months before the expiration of the five months. She brought suit for damages, and recovered judgment. This court reversed said judgment, saying: "She [plaintiff] had no contract for the five months, and was in no position to make one for that length of time. * * * The plaintiff could not make such a contract, as she did not possess the necessary qualification therefor. The board was therefore released from any obligations under this contract, even though it could have been enforced if the plaintiff had been qualified to make it—a point which it is not necessary to determine here." Plaintiff's counsel urge that that case is to be distinguished from this, because an examination of the record shows that Miss O'Leary could not have procured another certificate, while the plaintiff in this case could and did. That decision was not based upon the circumstance that Miss O'Leary could not qualify herself by procuring another certificate. It was based upon the principle that she could not, by reason of her not having such a certificate, make the contract which she sought to enforce. That case clearly decides that the statute (section 4812, Comp. Laws 1897) requires the teacher, at the time the contract of employment is made, to possess a certificate qualifying her to perform her contract; and this construction, in our judgment, is correct.

In this view of the case, the other assignments of error are immaterial.

The judgment of the court below will be affirmed. The other Justices concurred.

WESTPHAL v. St. JOSEPH & B. H. ST. RY. CO.

(Supreme Court of Michigan. July 14, 1903.)

STREET RAILROADS—COLLISION—NEGLIGENCE—QUESTIONS FOR JURY—IMPEACHING WITNESS.

1. Where plaintiff's own testimony shows he was using due diligence to get off the track of an approaching car, and a witness for him states he went right on the track, the question of his negligence is for the jury.

2. A party cannot impeach his own witness by showing contradictory statements made by him because his testimony on cross-examination was not such as he expected.

3. Where negligence charged against a street car company is the failure to reasonably check and control the speed of the car, and the evidence shows the car was heavily loaded and approaching plaintiff on a down grade, the question of negligence is for the jury.

Error to Circuit Court, Berrien County; Orville W. Coolidge, Judge.

Action by Frederick Westphal against the St. Joseph & Benton Harbor Street Railway Company. From a judgment for defendant, plaintiff brings error. Reversed.

Plaintiff was driving his horse, hitched to a road wagon, over the Wayne street viaduct, over a bayou of the St. Joseph river, between the cities of St. Joseph and Benton Harbor. The viaduct is 300 feet long and 19 feet wide, with guard rails on either side. The defendant has two tracks across this viaduct. The street slopes gradually from the bluff on the southwesterly bank of the bayou to the level of the river bottom on the opposite side. In crossing over this viaduct vehicles must of necessity travel upon the street railway tracks. Plaintiff came from a street running at right angles with Wayne street. As he approached the tracks he looked for a car, but saw none, and then turned to the left to cross the viaduct. When about the middle of the viaduct he heard a signal bell, looked around, and saw a car approaching. The car struck the hind end or hind wheel of his wagon, overturned the wagon box, and threw him to the ground. He was sitting on a spring seat near the front of the box. The box sat loose on the wagon. He testified that the box was thrown from the wagon, but the wagon did not tip over.

The negligence charged is the propulsion of the car at a high, dangerous, and negligent rate of speed, and failure to reasonably control and check the speed of the car. Plaintiff testified: "When I heard the bell I tried to get out of the track. To get off the track, I turned to my left, so I tried to get out. I do not know where the horse was when the wagon was upset. When the car struck me the horse was on the left-hand track. I had guided him off the right-hand track. At the time I was struck the front wheels of my wagon were pretty near over to the left rail. The hind wheels were over to the right track. At the time I was struck my horse was over the left-hand track. My wagon is about eight feet long. I couldn't tell how far apart the inside rails of the street car track are. At the time the car struck me my horse was headed to the left. His front feet was in the left-hand track. And he was headed toward the canal, and the front wheels were in the left-hand track, too, and the hind wheels —one was between them two tracks and one in the track. This at the time the car struck

Digitized by Google

me." One Samuel Hannon, a passenger on the street car, was called as a witness for the plaintiff. He stood on the platform beside the motorman. On direct examination, Mr. Hannon testified that when the car first struck the wagon "the horse was angling across the track; that when plaintiff was thrown from the seat he struck upon his feet; that the horse began to run; that plaintiff's feet became entangled in the lines, and he was dragged for a short distance." On cross-examination he testified that plaintiff was pulling his horse to the right onto the track rather than to the left and away from it. Defendant introduced no testimony, and the court directed a verdict for the defendant on the ground that "Mr. Hannon's evidence shows such negligence on the part of the plaintiff that he cannot recover legally."

Gore & Harvey, for appellant. Humphrey S. Gray and M. L. Howell, for appellee.

GRANT, J. (after stating the facts). 1. If recovery depended upon the testimony of Mr. Hannon, the court may have been right in directing a verdict. But plaintiff was not bound by his testimony. Plaintiff's counsel claim that they were taken by surprise by the testimony given upon cross-examination. According to plaintiff's testimony, he was using due diligence to get off the track of the approaching car, and to give the car the right of way. It is undoubtedly true that Mr. Hannon was in better position to observe the manner of the accident and the speed of the car than the plaintiff, who testified that as soon as he heard the bell he attempted to put himself in a place of safety, but this did not make his testimony conclusive. We think the question of plaintiff's negligence should have been submitted to the jury.

2. Plaintiff's counsel subjected Mr. Hannon to a rigid redirect examination, and asked him if he had not made certain contradictory statements to certain persons, which he denied. They then sought to show these contradictory statements, which were excluded by the court. If under any circumstances a party litigant may in a civil action impeach his own witness, whom he is not obliged to call, by proving contradictory statements, this case is not one to justify the practice. The witness was not asked upon direct examination in which direction plaintiff was guiding his horse. On cross-examinaton he testified that he was pulling the horse's head to the right instead of to the left, as he should have done. A party will not be permitted to impeach his own witness by showing contradictory statements made by him because his testimony on cross-examination is not such as he expected the witness to give. We settled this question in criminal cases, in People v. Elco (Mich.) 91 N. W. 755, where the people are obliged to call the witnesses. The rule has not been extended by this court in civil cases, when a party is under no obligation to call the witness. Counsel cite Darling v. Thompson, 108 Mich. 218, 65 N. W. 754, and Smith v. Smith, 125 Mich. 234, 84 N. W. 144, as supporting their contention. Counsel are in error. These cases and other similar ones hold only that the party calling the witness is not bound by his testimony if the testimony of other witnesses shows a different state of facts.

3. Defendant contends that there was no evidence of negligence on the part of the defendant, and that for this reason the verdict should be sustained. If the sole claim of negligence had been that the defendant propelled its car at a high, dangerous, and negligent rate of speed, the court might have been justified in holding that no negligence in this respect was shown. But the other negligence alleged was the failure to reasonably check and control the speed of the car. The care to be used in keeping a car under control depends upon the circumstances of each particular case. Greater care would be required in some cases than in others. The car, heavily loaded, was approaching the plaintiff upon down grade. Plaintiff was entitled to reasonable time, by the exercise of reasonable effort, to drive his wagon out of reach of the approaching car. If plaintiff was exercising due care, which must be the first question to be determined by the jury, we think that the question of defendant's negligence belonged to the jury. Rouse v. Detroit Ry. Co., 128 Mich. 153, 87 N. W. 68; Hicks v. Citizens' Street Ry. Co., 25 L. R. A. 508.

Judgment reversed, and new trial ordered. The other Justices concurred.

DALLAVO v. RICHARDSON et al.

(Supreme Court of Michigan. July 14, 1903.)

STATUTE OF FRAUDS—PART PAYMENT—EFFECT—WHEN MADE—QUESTION FOR JURY—ESTOPPEL TO ASSERT.

1. Under Comp. Laws 1897, § 9516, which provides that "no contract for the sale of any goods, wares or merchandise for the price of fifty dollars or more shall be valid unless the purchaser shall * * * give something in earnest, to bind the bargain or in part payment," etc., the payment, to take the case out of the statute, need not be made at the time the contract is entered into.

2. In replevin for railroad ties claimed to have been sold by defendant to plaintiff, it appeared that plaintiff afterwards sold defendant a shingle mill, and, after defendant had loaded the machinery onto his wagon, plaintiff testified that he gave defendant the shingle belt, and he said, " 'How are you going to get your pay for this bill?' and I said, 'You had bad luck with that mill down there; apply it on the ties;' and he said, 'All right.' " Afterwards a letter was sent to defendant in plaintiff's name, demanding payment for the shingle mill. This was sent by plaintiff's wife, who testified she had forgotten it was to be applied on the ties. *Held* to make a question for the jury whether the delivery of the shingle mill was in part payment for the ties, so as to take the sale of the latter to plaintiff out of the statute of frauds.

¶ 1. See Frauds, Statute of, vol. 22, Cent. Dig. § 181.

Digitized by Google

3. The fact that the bill was rendered defendant for the shingle mill did not estop plaintiff from asserting that it was to be applied on the ties.

Error to Circuit Court, Mecosta County; Lewis G. Palmer, Judge.

Action by John Dallavo against John Richardson and Archie Foster. Judgment for plaintiff, and defendants bring error. Affirmed.

M. Brown (George E. Nichols, of counsel), for appellants. A. B. Cogger (A. Broomfield, of counsel), for appellee.

MONTGOMERY, J. This is an action of replevin for a quantity of ties numbering some 3,400. The plaintiff recovered, and the defendants bring error.

The question presented to the court below was whether the plaintiff had purchased of the defendants the ties in question. It was the plaintiff's theory that the ties had been purchased, sufficiently identified, an inspector agreed upon, a portion of the purchase price paid, and the balance tendered. The plaintiff's testimony tended to show that the bargain for the ties was made on the 26th of August, 1900, and was oral; that in September or October, 1900, he sold the defendants a shingle mill, plaintiff's version of that transaction being as follows: "I let defendants have part of a shingle mill in September or October, 1900. My wife has got it down. That was at Wyman. Mr. Richardson came after it. He had Mr. Farrell and Mr. Washman with him. There were two or three men with him. My oldest son helped load up the machinery, and the last piece was a shingle belt I had in the store. We went in the store, me and Mr. Richardson, and Mr. Washman stood on the platform. Farrell was out in the road in front of the store with the team with a load, and I gave the shingle belt to Mr. Richardson, and he turned around and said, 'How are you going to get your pay for this bill?' And I said: 'I don't need the money just now. You had bad luck with that mill down there. Apply it on the ties.' And he said, 'All right.' The price agreed upon for the shingle mill machinery was one hundred and fifty dollars. I let Mr. Richardson have some Babbitt, and also did some team work for him. The Babbitt and team work amounted to five dollars. He took the machinery and went away." On the 26th of November a letter was sent to the defendants in the name of plaintiff, demanding payment for this shingle mill, and $5 for team work and Babbitt. This letter was sent by plaintiff's wife, who testified that at the time she sent it the fact that the price of the shingle mill was to be applied on the ties had escaped her recollection. The circuit judge submitted the question to the jury as to whether there had been a completed sale of this property. It is contended in this court that the evidence did not warrant the submission of this question to the jury, the principal contention being that the contract was void under the statute of frauds. Undoubtedly, it was so in its inception, but under our statute (section 9516, Comp. Laws 1897) if a part payment be made at any time when it is intended by the parties to be received as a payment upon the contract price it is sufficient to take the case out of the statute. In this respect our statute differs from the statute of New York in that the earnest or part payment is required by the New York statute to be made at the time the contract is entered into. Our statute contains no such provision. In such case, if a payment be made, and accepted as a payment upon the oral contract, it is sufficient to constitute a part payment under the statute if it be shown to be accepted with reference to such previous contract. Wood, Statute of Frauds, § 294; Gault v. Brown, 48 N. H. 183, 2 Am. Rep. 210; Whitwell v. Wyer, 11 Mass. 6; Thompson v. Alger, 12 Metc. (Mass.) 428. In the present case the circuit judge distinctly charged the jury that, unless the shingle mill and teaming were accepted by the defendants as part payment on the purchase price of the ties, there was no sale of the ties which the law would recognize. Counsel for the defendants refer to the case of Gorman v. Brossard, 120 Mich. 611, 79 N. W. 903, and claim that that case is decisive of the present. But that case presented a very different question. There there was no delivery, and no payment, except as it was claimed that an agreement to discharge a pre-existing debt would constitute such payment. The effort is made to liken that case to this in this: that, inasmuch as the shingle mill was loaded on the wagon of the defendants before the agreement to apply the purchase price on the ties was made, the effect of the agreement was simply to discharge a debt; but it cannot be held that the title to this machine had passed to the defendants until the arrangement for the payment of the purchase price had been made between the parties. It was still within the control of the plaintiff, and the first contract for payment was made at the time the agreement was made to apply it upon the purchase price of the ties.

It is further contended that the plaintiff was estopped from now asserting his purchase because of the fact that a bill was rendered to defendants for the shingle mill, etc. We do not, however, find that the defendants were misled by this fact, or that their position was materially changed by reason of this error on the part of the plaintiff's wife.

There was a fair case for the jury, well submitted, and the judgment should be affirmed. The other Justices concurred.

Digitized by Google

134 Mich 237.

TWEDDLE v. JUDGE OF SUPERIOR COURT OF GRAND RAPIDS.

(Supreme Court of Michigan. July 14, 1903.)

CONTEMPT OF COURT—COMMITMENT—SUFFICIENCY—CERTIORARI—PRACTICE.

1. Under the express provisions of Comp. Laws 1897, § 1101, the particular circumstances of the offense must be set forth in an order or warrant of commitment for contempt of court.

2. In certiorari the objection that the officer allowing the writ had no authority so to do can be raised only by motion to dismiss, and not by the return.

Certiorari to Superior Court of Grand Rapids; Richard L. Newnham, Judge.

Certiorari by John J. Tweddle against the judge of the superior court of Grand Rapids to review an order adjudging plaintiff guilty of contempt of court. Order vacated.

John J. Tweddle, in pro. per.

CARPENTER, J. This is a certiorari to review contempt proceedings. The following order constitutes the entire record in said proceedings: "In re Contempt Proceedings against John J. Tweddle. In this cause, it appearing to the court that J. J. Tweddle has committed the offense of contempt of court, therefore it is ordered and adjudged by the court now here that said respondent pay a fine in the penal sum of five dollars ($5.00), and do stand committed to the common jail for the county of Kent until such fine is fully paid, and for a period not exceeding two days. Whereupon, upon request of respondent, judgment was deferred until Monday morning at ten o'clock."

The statute—section 1101, Comp. Laws 1897—in express terms requires the "particular circumstances" of the offense to "be set forth in the order or warrant of commitment." The order of commitment under consideration does not set forth these circumstances, and is therefore defective.

The writ to review these proceedings was allowed by a circuit court commissioner of Kent county. The point is made in defendant's return that such an officer has no authority to allow said writ, to review the proceedings of a superior court. If it were contended that the writ was improvidently allowed, that objection would be considered on the hearing. Farrell v. Taylor, 12 Mich. 113. No such contention is made. Indeed, the writ was not improvidently allowed. The objection under consideration goes only to the regularity of the writ which was issued in this case. That objection should have been brought to the attention of the court, not by the return, which puts the merits of the controversy at issue, but by a motion to dismiss. We must decline, therefore, to consider it.

The order adjudging plaintiff in certiorari guilty of contempt must therefore be vacated. No costs will be allowed. The other Justices concurred.

CHRISTIAN et al. v. MICHIGAN DEBENTURE CO. et al.

(Supreme Court of Michigan. July 14, 1903.)

DEBENTURE COMPANIES—VALIDITY OF REDEMPTION SCHEME—FRAUDULENT REPRESENTATIONS TO PURCHASERS—INSOLVENCY—RIGHTS OF HOLDERS OF DEBENTURES—ESTOPPEL.

1. A debenture company organized under the laws of West Virginia transferred its office to Michigan. Its business was the sale of debentures. Its authorized capital was $250,000. Only a very small part of the capital stock was paid in. It deposited in a bank $50,000 as a guaranty fund under a secret agreement between the officer of the company furnishing the money and the company by which the former agreed to guaranty a credit of $50,000 to the company. The guaranty fund was held out to investors and others as part of the funds of the company. The officer furnishing the money knew of this. The company advertised that several prominent business men had invested when in fact the officer of the company had taken out the debentures, paying therefor, and receiving all redemptions thereon. The federal government determined that it was a lottery scheme. *Held* sufficient to show fraud on the part of the company and its officers in the sale of debentures.

2. A suit against an insolvent debenture company, which has ceased to do business, except to collect on existing debentures, praying for the appointment of a receiver, a settlement of the affairs of the company, together with a payment to the holders of the amounts paid by them, less the amounts received from matured coupons, and for a decree to prevent an officer of the company from obtaining possession of the guaranty fund of the company, may be instituted by one or more debenture holders in behalf of all holders, their interest being joint.

3. The suit may be maintained though the debentures are not matured.

4. Though the scheme under which the company sold debentures was illegal, and the representations were such as would naturally tend to deceive, the holders were entitled to equitable relief where they acted in good faith.

5. One who furnished money to a debenture company for its guaranty fund, and who knew that this fund was advertised as the property of the company for the purpose of inducing purchases of debentures, was estopped to claim the fund as against the purchasers, though he was innocent in making, at the time of furnishing the money, a secret contract with the company by which he agreed to guaranty a credit to the company to the amount of the sum furnished.

Appeal from Circuit Court, Wayne County, in Chancery; Joseph W. Donovan, Judge.

Suit by Charles Christian and others against the Michigan Debenture Company and others impleaded with the Preston National Bank. From a decree for plaintiffs, the defendants Michigan Debenture Company and others appeal. Affirmed.

September 8, 1899, the defendant the Michigan Debenture Company was organized at Columbus, Ohio, as a corporation under the laws of West Virginia, and filed its articles of association with the Secretary of State of West Virginia. The business of the corporation was the sale of what is termed debentures under a plan set forth in its prospectus and advertisements. October 14, 1899, its offices were transferred to Detroit, and it began business in the state of Michigan on or

Digitized by Google

about that date. Its authorized capital was $250,000. On its organization five shares of its capital stock, par value $100 per share, were subscribed for and $50 was paid in. $147,700 of the capital stock was issued by the company as fully paid. Only $3,724 of its capital stock was ever paid in. This sum was later transferred to the expense fund of said company. Afterwards $2,000 was transferred from the expense fund to the redemption fund, and $4,500 was transferred from the expense fund to the reserve fund. The entire cash capital of the company was thus wiped out, but was not dissipated, as these amounts were only transferred to other funds of the corporation. The remainder seems to have been issued and given to E. B. Harang in payment for the plan, etc., on which the company did business. On June 30, 1900, the Michigan Debenture Company, acting under the provisions of section 8587 of the Compiled Laws of Michigan, filed with the Secretary of State a certified copy of its articles of association, etc., paid the franchise fee, and were admitted to do business in this state. In order to give the Michigan Debenture Company a commercial standing so they could sell their debentures, Wm. A. Pungs, the president of the company, deposited $50,000 to its credit in the Preston National Bank. This fund was deposited in said bank under a secret written agreement between Wm. A. Pungs and the Debenture Company, by which said Pungs agreed to guaranty a credit of $50,000 to the company; and in pursuance of that agreement the deposit was made, and the Preston National Bank issued to the Michigan Debenture Company a receipt for same, as follows: "Guarantee Fund. The Preston National Bank of Detroit, Mich. Capital, $700,000. October 17, 1899. Received of the Michigan Debenture Company fifty thousand dollars, which amount is held by this bank subject only for the payment of that amount of matured debentures issued by said the Michigan Debenture Company. [Signed] Preston National Bank. F. W. Hayes, President." The $50,000 guaranty fund was held out to investors and others as part of the funds of the company. The Debenture Company from time to time advertised largely in the Detroit newspapers and sent out a great many circulars and other advertising matter. These advertisements represented the debentures of the company to be a guarantied investment of at least 8 per cent. protected by a $50,000 guaranty fund in the Preston National Bank. Defendant Pungs knew of these advertisements, and knew that these complainants and others were buying the company's debentures, believing the $50,000 guaranty fund belonged to the company. Several of the complainants testified to these representations, and that they in good faith purchased the debentures, relying upon them. From time to time lists of names of those investing with the company, including the names of many prominent citizens, with a statement of amounts paid in and received by them, were published by the company, for the purpose of getting business. Of these three of the most prominent never paid in anything on the debentures of the company, and none of them ever received anything from the company. Defendant Pungs took out and paid for their debentures and received all redemptions on such debentures. Defendant Pungs was the actual manager and head of the company from March, 1900, until this suit was brought. He was practically the only man who was financially interested in the company or who had anything to gain by its operations. In the fall of 1900 the company was denied the use of the United States mails because of lottery features in their debentures, and never sold any new contracts thereafter, but continued to collect dues and lapse contracts until this suit was brought. In December, 1900, the affairs of the company were examined by the State Banking Department, and the company found to be insolvent. When this suit was commenced the company was insolvent, and its condition was steadily growing worse. From the time the company was denied the use of the mails the income grew less and less each month, and a finishing point would finally have been reached. The receipts of the company were constantly decreasing, and the value of the remaining coupons, according to the schedule of redemption values issued by the company, was constantly increasing. If the business had been continued the time would have arrived when the so-called "guaranty fund" would have been insufficient to pay the matured debentures. Under the written contract between the Debenture Company and defendant Pungs, he was to receive $5,000 from the company for the said guaranty fund of $50,000 for the first year. In fact he received $1,500 more, being 3 per cent. on the deposit paid by the bank. At the end of the first year defendant Pungs attempted to withdraw $15,000 from the guaranty fund, but the Preston National Bank declined to allow him to do so. Thereupon the Debenture Company paid to defendant Pungs $15,000 from the reserve fund, and substituted $15,000 from the guaranty fund in its place. The company was insolvent at the time, yet the debenture holders were told that unless they kept up their payments their contracts would be lapsed. The company had no income except that received from lapses and interest on their funds in bank. Complainants are debenture holders, and filed this bill alleging fraudulent conduct on the part of Pungs and the officers and promoters of the defendant company, its insolvency, and its cessation of all business except to collect on existing debentures; that the business of the company is fraudulent, its debenture contracts impossible of performance, and that Pungs claims that the $35,000 on deposit with the defendant bank as the guaranty fund be-

longs to him. The bill prays for the appointment of a receiver; that complainants be relieved from any further payments on said debentures; that an accounting be had; that the complainants recover the amounts paid by them, less the amounts received by them from matured coupons; and that the transfer of the $15,000 to Pungs be declared void. The case was heard upon pleadings and proof taken in open court, and decree rendered for complainants.

Barbour & Rexford, for appellants. Edwin F. Conely, Orla B. Taylor (Haug & Yerkes, of counsel), for appellees.

GRANT, J. (after stating the facts). 1. Is fraud charged in the bill and proven by the evidence against the defendant Pungs and the other directors of said company? The bill sets forth fully the main facts above stated. It charges that the scheme was illegal, a mere lottery, and that the representations made by the defendant officers in their advertisements and literature were false and fraudulent. It sets forth all the circumstances under which Mr. Pungs furnished the $50,000, to be deposited and advertised as a guaranty fund belonging to the company, and that the arrangement between Pungs and the company was concealed. The bare statement of this arrangement stamps it as fraudulent. The United States government investigated the scheme, declared it fraudulent, and prohibited the company the use of the mails. The banking department of this state made a like investigation and reached the same conclusion. The character of the scheme will in the main appear from an examination of the contract, printed in the margin.*

The allegation of fraud is sufficient. The proofs fully sustain the charge. The defendant directors advertised this guaranty fund as the property of the company. It published the receipt of the bank that it was received and held by the bank "only for the payment of that amount of matured debentures issued by the Michigan Debenture Company." This was a grossly fraudulent representation under the present claim of the defendants.

2. It is urged that the complainants are severally, and not jointly, interested, and therefore cannot maintain the bill as joint complainants. The bill is filed in behalf not only of the complainants, but of all the debenture holders. Complainants are jointly interested to prevent the dissipation of the funds in the treasury of the company, and in preventing Mr. Pungs from obtaining possession of the guaranty fund. Their interests are more closely connected than are taxpayers owning several distinct parcels of land, and who jointly file a bill to restrain the illegal appropriation of public funds or illegally contracting a debt. That taxpayers may so join in a bill of complaint is well established. George v. Electric Light Co., 105 Mich. 1, 62 N. W. 985. The reason for these debenture holders joining is more cogent.

3. It is next urged that these complainants cannot maintain the bill because these debentures have not matured. Upon being denied the use of the mails, the company ceased to do any business in this state other than to attempt collections from its then holders of debentures. It is apparent that the more these holders paid the worse off they would be. The company was insolvent, its scheme found to be fraudulent and impossible of performance. Its principal manager and promoter was its treasurer and claimed its indemnity fund. Under these circumstances, the only security the debenture holders had was to stop further expense and to recover from the company the money in its treasury so far as it would go towards paying back the money they had invested.

4. It is next contended that, if the scheme under which the debentures were sold is illegal and a lottery, equity will not give complainants relief. If complainants purchased these debentures with knowledge of their illegal and fraudulent character, both law and equity would leave them without remedy. If, on the contrary, they acted in good faith, and were honestly deceived by the representations of the defendant through its officers, and the representations were such as would naturally tend to deceive, they are entitled to relief. The published literature of the company covers many pages of the record, and is so worded that it would naturally deceive the ignorant and the unwary, and as well intelligent persons unfamiliar with business methods. Mr. Pungs secured the names of three prominent citizens of Detroit as purchasers of these debentures, and so advertised them. In fact, they invested no money, but Mr. Pungs himself paid all their dues, and under a resolution of the directors authorizing a compromise he at once took advantage of the resolution, and received the money which under it would go to these three holders. This is one of the methods very commonly resorted to to induce others to make investments in such corporations. The scheme appeared plausible upon its face, and the representations made in the company's publications. No moral turpitude attaches to the complainants. The case falls within the following authorities: Calkins v. Bump, 120 Mich. 335, 79 N. W. 491; State v. Interstate Investment Co. (Ohio) 60 N. E. 220, 52 L. R. A. 530, 83 Am. St. Rep. 754.

5. Even if Mr. Pungs were entirely innocent in making his contract for the deposit of the $50,000, as between him and the debenture holders, he must suffer the loss. Holcomb v. Noble, 69 Mich. 396, 37 N. W. 497; Peters v. Canfield, 74 Mich. 498, 42 N. W. 125; Condon v. Hughes, 92 Mich. 367, 52 N. W. 638; Stevens v. Ludlum (Minn.) 48 N. W. 771, 13 L. R. A. 270, 24 Am. St. Rep. 210.

*See end of case.

Digitized by Google

Mr. Pungs knew that this fund was advertised as the property of the company. It was done for the purpose of inducing purchases. It had the desired effect. He is now estopped to claim title to any of this fund until the debenture holders have been made whole.

Decree affirmed. The other Justices concurred.

Contract.

Certificate No. ——.

Authorized Capital Stock, $250,000.00.

The Michigan Debenture Co., Incorporated, Does hereby agree to pay to —— or order, upon maturity or redemption of any of the hereto attached five coupons, a sum equal to all the payments made thereon, together with the respective share of the net surplus earnings as shown by Schedule of Redemption Values.

The terms and conditions printed on the back hereof and in application herefor are a part of this contract as fully as if recited herein.

Signed, sealed and delivered at Detroit, Mich., this —— day of ——, 19—.

——, President.

——, Secretary.

Terms and Conditions.

Payments on this Debenture shall be five dollars membership fee for the first month, and thereafter an installment of fifty cents per month on each unredeemed coupon until redemption or maturity. The membership fee must accompany the application, and the monthly installments are due without notice at the main office or some duly authorized repository, on the first day of each month, beginning with the first month after the date of this certificate. Failure to pay on or before the fifteenth day of the month any installment due hereon shall render this contract null and void and forfeit all payments made on same; but the same may be reinstated at any time within thirty days from lapse, by payment of overdue installment and a fine of ten cents on each unredeemed coupon; but in no case shall the fine be less than twenty-five cents.

No receipt for payment is valid unless it bears the signature of the secretary or some person acting upon his written authority, and all remittances are made at the sender's risk.

Apportionment of Receipts. All money paid to the company on account of Debentures (or coupons) shall be divided into three separate funds, which shall be designated and used as follows:

Reserve Fund.—This fund shall consist of twenty per cent. of all monthly installments paid to the Company by holders of its Debentures, which, together with its interest increment, shall be invested in such securities as the Board of Directors may deem advisable.

Expense Fund.—This fund shall consist of the purchase price of all Debentures (viz.: five dollars on each Debenture issued) together with fourteen per cent. of all subsequent installments received by the Company on account of same; also of all fines, transfers, fees, and other extraneous receipts.

Redemption Fund.

This fund shall consist of sixty-six per cent. of all money collected by the company on account of monthly installments on outstanding Debentures. It shall be subdivided into two separate funds, designated respectively as the "Special Redemption Fund," and the "General Redemption Fund," each of which shall be applied monthly as collected to the redemption of coupons as hereinafter specified.

Special Redemption. Each month sixteen per cent. of the total redemption fund for that month shall be used as a Separate Redemption Fund for that month, to be applied as follows: The lowest numbered coupon of the lowest numbered Debenture shall be redeemed; then the lowest numbered coupon of the next Debenture in order, and so on through the list until said fund is disbursed.

General Redemption. Each month eighty-four per cent. if the total redemption fund for that month shall be used as a General Redemption Fund, to be applied as follows: The coupons to be redeemed each month with this fund are scattered throughout the entire list of coupons eligible for the redemption, and cannot be designated in advance of the disbursement of the Special Redemption Fund, nor until the calculation (hereinafter described) has been made for the purpose of determining the number of coupons that must be alternately passed over in the course of redemption. After the number which must intervene between the coupons to be redeemed has been determined as aforesaid, and the Special Redemption for that month has been concluded, a starting point for the General Redemption is given by first redeeming the lowest numbered coupon attached to the Debenture next following the last one from which a coupon was redeemed by the Special Redemption. And then passing over as many consecutive coupons (of those eligible for redemption) as are equal to the "Redemption Numeral," redeem another, and so on in like order until the fund is disbursed.

Redemption shall occur regularly on the 25th day of each month; but whenever the 25th shall fall on Sunday or other legal holiday, the redemption shall occur on the next legal day following.

The numeral apart which shall elect the coupons to be redeemed, must be determined by dividing the total number of eligible coupons by the number the amount will pay on basis of the average value of such coupons.

The redemption numeral may be changed by order of the Board of Directors to any fractional part of the numeral obtained by the foregoing calculation.

Surrender Value. At any time after thirty-six months from date hereof, provided all payments of installments have been made as same became due and payable, the holder of this Debenture may, if he so desires, surrender same to the Company and receive therefor a paid-up Certificate for the total sum paid on account of this Debenture to that date (less the amount received by the Company on account of coupons previously redeemed), together with eight per cent. per annum for the average time. This accrued interest to be added to the principal of the paid-up Certificate. All such paid-up Certificates will be paid by the Company in the order in which the applications for same are filed, and shall bear interest at eight per cent. per annum until paid. For this purpose an amount not exceeding five per cent. of the General Redemption Fund for any one month may be used.

Agent's Authority. No person has power to alter, waive or modify in any way the terms and conditions of this contract, and no promises or conditions other than those contained herein shall be binding upon the Company.

Transfer. This Debenture is transferable only on the books of the Company, for which a fee of twenty cents for each unredeemed coupon is charged; but in no case will the fee be less than fifty cents.

Eligibility and Maturity. This certificate shall not be eligible for redemption until one monthly payment shall have been made hereon, and will be deemed fully matured at expiration of seventy-two months from date hereof. The money necessary to pay off said Debenture shall be drawn from the Redemption Fund most immediately available, and should that amount be insufficient for the purpose, then the balance shall be drawn from the Reserve Fund.

Digitized by Google

GATISS v. CYR.

(Supreme Court of Michigan. July 14, 1903.)

STATUTE OF FRAUDS—ACCEPTANCE—DELIVERY TO COMMON CARRIER.

1. Delivery of goods to a common carrier for shipment to the purchaser is not a delivery to and acceptance by the purchaser, so as to take the case out of the statute of frauds.

Error to Circuit Court, Alger County; Joseph H. Steere, Judge.

Action by John H. Gatiss, Jr., against Isadore Cyr. Judgment for defendant, and plaintiff brings error. Affirmed.

This suit was commenced in justice court. Defendant, being informed that plaintiff, a tradesman, had potatoes to sell, went to his store to buy them. Plaintiff was absent. His clerk showed defendant some potatoes. Defendant immediately after, and on October 16th, wrote plaintiff the following letter: "Mr. Gatiss, Chatham, Mich.: I have been to your store yesterday to see you in regard to potatoes. As you were not at home couldn't make any deal. The potatoes that your clerk showed me are satisfactory. I can take about five hundred bushels of those potatoes at 60 cents. If you should not have enough to make a car load you might get some from Mr. Vaughn to finish the car, as I have bought from him already 75 bushels, and I agreed to take balance of his stock. I wish you would see him so I may get all in same car. You must be sure to ship me the car before the last of this month, so that you get your check November 15th. P. S.—You can put six or seven hundred bushel in car." To this letter plaintiff did not reply in writing, but immediately took steps to comply with its terms by shipping the potatoes. The car was loaded on the 22d, and duly shipped. It contained 21,535 pounds of potatoes. After some delay in transportation, the car was delivered by the railroad company to the defendant, who promptly refused to receive and accept the potatoes, and so notified the plaintiff. It is claimed by the defendant that the potatoes were not such as he bought, while the plaintiff claims that they were, and in good condition when shipped. The potatoes were in bad condition when shipped, or became so on account of cold weather while in transportation. No acceptance was shown. The court directed a verdict for the defendant, for the reason that the contract, not being in writing, was void under the statute of frauds.

H. B. Freeman, for appellant. F. D. Mead, for appellee.

GRANT, J. (after stating the facts). If delivery by the plaintiff to the common carrier for shipment was both a delivery to and an acceptance by the defendant, the case is not within the statute; otherwise it is. While some authorities hold that a common carrier is the agent of the vendee for delivery and acceptance (Strong v. Dodds, 47 Vt. 348; Leggett, etc., v. Collier, 89 Iowa, 144, 56 N. W. 417), the contrary rule is established by the decisions of this court (Grimes v. Van Vechten, 20 Mich. 410; Webber v. Howe, 36 Mich. 150; Smith v. Brennan, 62 Mich. 349, 28 N. W. 892, 4 Am. St. Rep. 867; Kuppenheimer v. Wertheimer, 107 Mich. 78, 64 N. W. 952, 61 Am. St. Rep. 317). Under these decisions the court below correctly held the contract void, and directed a verdict for the defendant.

The judgment is affirmed. The other Justices concurred.

BENNETT v. CARR.

(Supreme Court of Michigan. July 14, 1903.)

FOOD—ADULTERATION—OLEOMARGARINE—SALE.

1. Pub. Acts 1901, p. 37, No. 22, § 1, making it an offense to manufacture or sell any product made wholly or in part of any fat not produced from unadulterated milk or cream, which shall be in imitation of yellow butter, provided the act shall not be construed to prohibit the manufacture or sale of oleomargarine free from coloration or ingredient that causes it to look like butter, does not prevent the manufacture and sale of an article the ingredients of which themselves naturally produce the yellow color.

Certiorari to Circuit Court, Muskegon County; Fred. J. Russell, Judge.

Certiorari by the people, on relation of John R. Bennett, to review a judgment of the circuit court sustaining the refusal of John M. Carr, a justice of the peace, to issue a warrant of arrest. Judgment affirmed.

Charles A. Blair, Atty. Gen., and Cross, Lovelace & Ross, for appellant. Smith, Nims, Hoyt & Erwin (Kingsley & Wicks, of counsel), for appellee.

GRANT, J. Relator is the inspector of the State Food and Dairy Department. On the 24th day of February, 1903, he made complaint before the respondent, a justice of the peace of the county of Muskegon, charging one Martin Aamondt with having sold one pound of oleomargarine, contrary to Act No. 22 of the Public Acts of 1901. The respondent refused to entertain the complaint and issue warrant, on the ground that the complaint stated no offense under the provisions of said act, and that said act is unconstitutional and void. Relator thereupon applied to the circuit court for the county of Muskegon for the writ of mandamus to compel the respondent to issue said warrant and proceed with the examination. The circuit court sustained the action of the respondent, and the case is now before us for review upon certiorari.

The statute in question reads as follows: "Section 1. No person, by himself or his agents, or servants, shall render or manufac-

---

1. See Frauds, Statute of, vol. 23, Cent. Dig. § 177.

Digitized by Google

ture, sell, offer for sale, expose for sale; or have in his possession with intent to sell, any article, product or compound made wholly or in part out of any fat, oil or oleaginous substance or compound thereof, not produced from unadulterated milk or cream from the same, which shall be in imitation of yellow butter produced from pure unadulterated milk or cream of the same: provided, that nothing in this act shall be construed to prohibit the manufacture or sale of oleomargarine in a separate and distinct form, and in such manner as will advise the consumer of its real character, free from coloration or ingredient that causes it to look like butter."

The complaint charges Mr. Aamondt with unlawfully selling one pound of oleomargarine "made wholly or in part of fat, oil, or oleaginous substance or compound thereof, as follows, to wit: Water, 11.75 per cent.; butter fat, 1.34 per cent.; beef fat, lard, and cotton-seed oil, 79.24 per cent.; salt and other mineral matter, 4.54 per cent.; curd, 3.13 per cent.—said article, product, or compound not being then and there butter produced from unadulterated milk or cream of the same, and being then and there in imitation of yellow butter produced from unadulterated milk or cream from the same, and not being then and there oleomargarine in a separate and distinct form in such manner as would advise the consumer of its real character, free from coloration or ingredient that would cause it to look like butter, but that the said oleomargarine was then and there of a yellow color in imitation of butter, said color not being then and there produced by the addition of any artificial coloring matter, but said color being produced solely by the said ingredients therein contained, the said ingredients hereinbefore set forth having been selected and used in the manufacture of said oleomargarine in such manner and in such quantities and proportion as to produce the oleomargarine that was then and there in imitation of yellow butter produced from unadulterated milk or cream from the same, contrary to the form of the statute," etc.

The oleomargarine so purchased was manufactured in the city of Chicago, state of Illinois, by one Moxley, a resident of said city, and was sold by said Moxley to said Aamondt in the usual course of trade, and by said Aamondt was sold in the usual course of retail trade, in the same form and condition, and in the original package, in which it was received by Aamondt from Moxley. It is conceded that this oleomargarine has a yellow color similar to butter, but the color is not produced by any artificial coloring substance or ingredient used for the purpose of coloration, but is produced solely by the selection and use, in proper proportions, of the substantial, recognized, legal, and necessary ingredients of commercial oleomargarine.

Does the complaint state an offense covered by the statute? The answer depends upon the construction to be given to the statute. The relator contends that the statute covers all products which look like yellow butter, and that it is immaterial whether such color is produced by some ingredient introduced for the purpose of causing the product to look like butter, or whether such color is produced by authorized and legal constituent food ingredients. The respondent contends that the statute is aimed only at the use of ingredients used solely for the purpose of producing yellow color, and does not prevent the manufacture of an article whose color is natural, genuine, and not an imitation. Penal statutes must be construed strictly, and cannot be extended by construction beyond the intent of the act as expressed on its face. The conditions existing at the time the statute was enacted, and the mischief to be remedied, are important factors in construing penal statutes. Two acts covering the same subject must be construed as in pari materia, and, if possible, effect given to both. These are elementary rules of construction. At the time the statute in question was enacted the only method in use in causing the oleomargarine to look like yellow butter was the introduction of some extraneous coloring matter. This was the mischief to be remedied. We clearly so understood in People v. Rotter (Mich.) 91 N. W. 167, where, speaking through Chief Justice Hooker, we said of this statute: "The statute under consideration * * * does not prohibit sales of oleomargarine which is not tainted with the prohibited ingredient." See, also, People v. Phillips (Mich.) 91 N. W. 616. The Legislature has defined oleomargarine which may be manufactured and sold in this state. Section 6, Act No. 147, p. 219, Pub. Acts 1899. It is conceded that the respondent has complied with this act. If we give the enlarged construction to the statute now in question, as urged by the relator, it follows that the Legislature has prohibited the manufacture and sale of a valuable article of food, the natural color of which resembles yellow butter (itself almost universally colored by extraneous matter). The manufacturer of such a product, if he sold it at all, would be compelled to introduce some coloring matter so as to make it look unlike the yellow butter of commerce. These two statutes must be construed together. The article sold by the respondent is clearly authorized by the first act. The latter act does not in terms prohibit its sale and manufacture. It does prohibit the use of any substance for the sole purpose of producing yellow color. The use of such coloring matter was the sole mischief then known to exist, and the only danger to be apprehended and guarded against.

A similar statute was passed in New Jersey, and the like contention was made to support a conviction, and the court said: "To construe the statute so broadly would render it practically prohibitive of the sale of all oleomargarine; for, of course, the compound must derive color from its ingredients, and

Digitized by Google

such a prohibition has manifestly not been declared." Ammon v. Newton, 14 Atl. 610, 50 N. J. Law, 548; McCan v. Commonwealth, 48 Atl. 470, 198 Pa. 509.

Our statute is copied verbatim from that of Massachusetts. A superior court of that state, in a case just decided, has held that the statute applied only to extraneous substances or ingredients which cause the product to look like butter, and not to cases where the ingredients themselves naturally produce the color. Commonwealth v. Himberg. The Supreme Court of the United States so held in regard to the same statute. Plumley v. Commonwealth, 155 U. S. 461, 15 Sup. Ct. 154, 39 L. Ed. 223.

The term "ingredient," used in the statute, does not refer to the ingredients essential to produce the article as defined by the Legislature, but to an ingredient used to produce color. The maxim "Noscitur a sociis" applies.

Under this disposition of the case it becomes unnecessary to discuss any constitutional question.

The order is affirmed. The other Justices concurred.

TRAVIS v. WATSON.

(Supreme Court of Michigan. July 14, 1903.)

BILLS AND NOTES—PAYMENT—EXTENSION OF TIME—CONTRACT—CONSTRUCTION.

1. Plaintiff wrote defendant: "I wish to know if you are going to pay note in full or only the interest this year, November 7th, 1900. * * * Should you care to keep the money another year, I can do without it, only I must know at once;" and defendant answered, "I will keep the matter you mention one more year, and later on will write you in regard to it." *Held*, that defendant's reply was not an acceptance of plaintiff's offer to extend the time another year, and defendant, having been garnished by a creditor of plaintiff, to whom he paid the note, was not liable to plaintiff thereon, on the ground that the note was paid to the creditor before it was due.

Error to Circuit Court, Clinton County; George P. Stone, Judge.

Action by Isabella M. Travis against John A. Watson. Judgment for defendant, and plaintiff brings error. Affirmed.

Frost & Jackson, for appellant. H. E. & E. L. Walbridge, for appellee.

CARPENTER, J. Plaintiff commenced this suit March 17, 1902, to recover on a promissory note payable to her order and made by defendant. The note was dated November 7, 1895, and was for $121, payable one year after date. On the 13th of November, 1900, one Harriett N. Ellis sued the plaintiff, before a justice, at St. Johns, Clinton county, and garnished the defendant. In defendant's disclosure, made in obedience to said garnishee summons, he admitted that he was indebted to the plaintiff in this case, upon the note in suit, to the amount of the principal thereof and the unpaid interest. Said justice court case resulted in a valid judgment in favor of Mrs. Ellis against the plaintiff. On a second summons being issued to the defendant to show cause, he paid into said justice court, on or about December 10, 1900, the full amount of principal and accrued interest on said note, and was thereupon by said justice discharged from further liability.

It is the claim of the plaintiff that, by an arrangement made by correspondence between plaintiff and defendant before said justice court suit was commenced, said note did not become due until November 7, 1901; that therefore defendant had no right to admit a present indebtedness in said garnishment suit; and that, in consequence, his liability to plaintiff was not affected by the proceedings in that case. The following is the correspondence which it is claimed created that arrangement: October 4, 1900, plaintiff wrote defendant: "Some time ago, I requested you not to pay the interest on the note I hold against you, of $121, to Mrs. Henry Ellis. Mrs. Ellis holds the original note, and I the copy. I find the note is given November 7th, 1895, and I wish to know if you are going to pay the note in full or only the interest this year, November 7th, 1900. Please let me know, as I am making arrangements to meet some obligations in December. Should you care to keep the money another year, I can do without it, only I must know at once." To this letter defendant replied, October 15, 1900: "Yours is just received. I will keep the matter you mention one more year, and later on will write you in regard to it." At the time defendant was served with the garnishee summons, he had not written again to plaintiff, as he agreed in the above letter, nor had he paid the interest due November 7, 1900. This case was tried without a jury. The court made a finding of facts, of which the foregoing is the substance, and rendered judgment for the defendant.

It is a complete defense to the claim asserted by plaintiff in this suit if the letters of October 4, 1900, and October 15, 1900, did not constitute a valid contract, extending the time of the payment of the note from November 7, 1900, to November 7, 1901. We agree with the trial judge that they did not. Such a contract was not made unless both parties were bound. It is clear to us that defendant's answer of October 15th to plaintiff's letter of October 4th was not such an acceptance as to bind the plaintiff. In plaintiff's letter of October 4th, she says: "I wish to know if you are going to pay note in full or only the interest this year, November 7th, 1900. Please let me know. * * * Should you care to keep the money another year, I can do without it, only I must know at once." This letter, properly construed, means that defendant may have the principal another year, but the interest due November 7th should be paid. Defendant's answer that "I will keep

the matter you mention one more year, and later on will write you in regard to it," clearly enough indicates that he will keep the principal another year; but he uses no words from which it can be inferred that he will pay the interest as plaintiff desired, and in fact he did not pay it. There was therefore no such acceptance of plaintiff's proposition as to create a contract binding upon her or upon defendant. See Johnson v. Stephenson, 26 Mich. 62; Eggleston v. Wagner, 46 Mich. 610, 10 N. W. 87. As this correspondence did not prevent plaintiff's enforcing payment of this note, it did not prevent Mrs. Ellis, her creditor, enforcing its payment in a proceeding in garnishment.

The view we take of this question makes the other assignments of error relied upon by the plaintiff immaterial. We refrain, therefore, from considering them.

The judgment of the court below is affirmed. The other Justices concurred.

BURGESS v. STOWE.

(Supreme Court of Michigan. July 14, 1903.)

CARRIERS OF PASSENGERS — ELEVATORS — STORES—INVITATION TO CUSTOMER—NEGLIGENCE — EVIDENCE — QUESTION FOR JURY—DEGREE OF CARE—INSTRUCTIONS.

1. Evidence in an action for personal injuries received by falling into an elevator shaft in defendant's store, on a supposed invitation to step into the elevator, examined, and *held* that the questions of negligence of the defendant and contributory negligence of the plaintiff were for the jury.

2. It was proper to refuse an instruction that if defendant, on raising the elevator gate, called "Elevator!" in a loud tone, with intention of warning others above who might be using the elevator, such act was not negligence; but it was for the jury to find whether an ordinarily prudent man would not have apprehended that such action might be construed by plaintiff as an invitation to step forward to enter the elevator.

3. It was not error to refuse to instruct that plaintiff could not recover because of the faulty condition of the shaft, or because defendant was without skill in the management of the elevator; the court having instructed clearly that plaintiff could not recover unless he received his injuries in acting on the invitation of defendant to enter the elevator.

4. Where defendant led the way to an elevator in his store, raised the gate, and called "Elevator," and plaintiff, believing this an invitation to enter the elevator, stepped forward and fell into the shaft, the fact that it was light enough for him to see that the elevator was not in the shaft, had he looked, did not preclude recovery, but it was for the jury to decide that under the circumstances plaintiff was not bound to exercise so high a degree of care.

5. A remark by plaintiff's counsel, at the beginning of his argument to the jury, "that they did not need to worry much about the verdict against defendant," was not to be construed as an invitation to the jury to consider evidence excluded by the court to the effect that defendant was insured against liability for plaintiff's damages, in the absence of evidence showing such meaning.

6. The owner of a building having an elevator for passengers, in operating such elevator, is not "bound to exercise the highest degree of care and diligence of a cautious person so far as human care and foresight can go," but is only bound to use the care required of an ordinarily prudent person under the circumstances.

Appeal from Circuit Court, Kent County, in Chancery; Willis B. Perkins, Judge.

Action by Harry W. Burgess against W. Arthur Stowe. From a judgment for plaintiff, defendant appeals. Reversed.

Butterfield & Keeney, for appellant. H. B. Fallass, for appellee.

CARPENTER, J. This is a suit brought to recover damages for personal injuries. Plaintiff recovered in the court below. Defendant asks this court to reverse that judgment on the ground that the testimony did not make a case for the consideration of the jury, and upon other grounds, which, as far as needful, will be discussed in this opinion.

1. Did the court err in submitting the case to the jury? Defendant contends that there was no evidence of his negligence, and that plaintiff was, as a matter of law, guilty of contributory negligence. The determination of this question requires an examination of the plaintiff's testimony.

Plaintiff was a newspaper publisher, and defendant was engaged in the business of selling paper at his store in Grand Rapids. On the afternoon of November 14, 1901, plaintiff visited defendant's store for the purpose of examining and purchasing a supply of paper. The paper which he wished to examine was on one of the upper floors in defendant's store. One of the means of reaching said floor was an elevator. This elevator ran in an open shaft, extending from the top of the building to the basement. The opening on the ground floor was six feet high and five feet and one inch wide. It was guarded by two doors, which were generally kept open, and a gate made of slats, which was about three feet high, and of the same width as the opening. One desiring to enter the elevator raised this gate to the top of the opening and passed under it into the elevator. The elevator was used for transporting both freight and passengers. No one was especially charged with the duty of guarding or operating it. Any one of many employés of defendant operated it, as occasion demanded. The operator controlled its movements by means of a perpendicular cable, passing through a corner of the elevator, and extending from the top to the bottom of the shaft. In the course of the conversation (which occurred on the ground floor of defendant's store) between the plaintiff and the defendant respecting the proposed sale of paper, defendant suggested that both he and the plaintiff go upstairs and examine said paper. Upon this being assented to, defendant led the way to the elevator. The doors were open and the gate down. Defendant raised the gate, stepped back, and in a louder tone than before said "Elevator!" Plaintiff,

¶ 6. See Carriers, vol. 9, Cent. Dig. §§ 1092, 1194.

Digitized by Google

supposing this to be an invitation to enter the elevator, stepped forward, and fell down the elevator shaft, and received the injuries complained of. The testimony makes it quite clear that defendant's purpose in raising the gate was to enable him to reach the cable which controlled the car, which, as a matter of fact, was on some floor above that upon which he and plaintiff stood; that he spoke the word "Elevator!" as he did, in accordance with the custom in his store, as a warning to all who might hear him that he proposed to use the elevator, and not as an invitation to plaintiff to enter the same.

There is some dispute as to whether or not the shaft was well lighted; plaintiff saying that the place was quite dark, while defendant's testimony indicates that it was quite light. We think it clear, however, that had plaintiff been called upon to give particular attention to where he was stepping he could not have failed to see that the elevator was not before him.

To us it seems clear that the jury was authorized by this testimony to find that the action of the defendant amounted to an invitation to the plaintiff to step forward into this shaft, and that in acting under this invitation plaintiff was not guilty of contributory negligence. Defendant has called our attention to a number of cases in which it has been held that a person injured by falling down an elevator shaft or into an open excavation cannot recover. We shall not attempt to discuss these cases. All of them are, in our opinion, inapplicable. In those cases the injured party was not, as in this case he was, acting under what he had a right to believe was the invitation of the defendant. This important circumstance not only created a duty on the part of the defendant, but had a very important bearing in limiting the obligation of the plaintiff to care for himself. Plaintiff certainly was not under the same obligation to guard against dangers that he would have been had no invitation been extended. We think, therefore, that the trial court did not err in refusing to direct a verdict for the defendant.

2. It is claimed that the court erred in refusing to instruct the jury:

(a) "If you find that Mr. Stowe, upon raising the gate, called 'Elevator!' in a loud tone of voice, and that this was with the intent or purpose on his part to sound a warning to any one above who might be using or about to use the elevator at that time, then such act on his part would not be negligence." This was not error. Plaintiff was with defendant, and it was competent for the jury to find that an ordinarily prudent man would have apprehended that raising the gate and shouting "Elevator!" might be accepted as an invitation to step forward. Defendant's liability in this case does not depend entirely upon his intent or purpose, as assumed in the above request.

(b) It was not error to refuse defendant's request that there could be no recovery against the defendant because of the supposed defective or faulty construction of the elevator car or shaft, or because Mr. Stowe was without skill in the management of the elevator. The charge of the court made it clear to the jury that the plaintiff could not recover unless he received his injury in acting upon the invitation of defendant. This clearly meant that there could be no recovery on account of defendant's want of skill, or because the elevator or some part of it was defective. Cases might arise in which it would be the duty of the court to give such requests in order to make clear the issue presented to the jury. This, however, is not such a case.

(c) Nor was it error to refuse to charge, as requested by defendant: "If on the morning of November 14th it was light enough in the elevator entrance so that Mr. Burgess could have seen that the elevator car was not in the shaft, and he did not see or notice that it was not there merely because he did not look, then I charge you that his failure to use his eyes was contributory negligence, and he is not entitled to recover." Under the circumstances of this case, it was competent for the jury to decide that the plaintiff, acting under the invitation of the defendant, was not bound to exercise the high degree of care required in the foregoing request.

3. At the beginning of his closing argument to the jury plaintiff's counsel said: "I just want to say to you, you don't have to worry much about the verdict against Mr. Stowe." It is contended by defendant's counsel that this was an invitation to the jury to take into consideration the suggestion implied in a question asked of defendant and excluded by the court as to whether he was protected by insurance against liability for plaintiff's damages. Plaintiff's counsel denies that he had any such purpose in making this statement. The words themselves do not naturally convey the thought that the jury are asked to be governed by the excluded testimony. The natural construction of the words is that the jury were advised not to concern themselves about the consequences of their verdict against defendant, and this is proper advice. There must have been some peculiarity in the way of speaking these words, if they conveyed the impression complained of. Defendant's counsel took no step to put evidence of that peculiarity, if there was such a peculiarity, on the record. He did not see fit to call the matter to the attention of the court until after the jury had retired to consider of their verdict. Under these circumstances, we do not think that he can ask us to find in these words the meaning complained of.

4. The court in charging the jury said:

"I instruct you that a person operating an elevator, in lifting a passenger from one floor to another in a building, is to be treated as a carrier of passengers, and the same duties

Digitized by Google

rest upon him as a carrier of passengers by railways. Though not insurers of the absolute safety of the passenger, the owner or operator of an elevator is bound to exercise the highest degree of care and diligence of a cautious person, so far as human care and foresight can go, and, in the absence of contributory negligence on the part of the person injured, is responsible for any injury occasioned because of any neglect against which a reasonable human prudence might have guarded. * * *

"To determine whether the defendant, on the day in question, was guilty of negligence, you will ask yourselves, and answer: Did he exercise the highest degree of care, under the circumstances of this case, consistent with the possibility of injury to the plaintiff, taking into consideration all the facts and circumstances you may find to be true, under the evidence in this case bearing upon this subject? * * *

"Did the conduct of the defendant amount to an invitation, as the plaintiff claims, or is the contrary true, as the defendant claims, taking into consideration the degree of care the defendant was bound to exercise toward the plaintiff, viz., the highest degree of care, as I have instructed you? * * *

"These parties owed reciprocal duties toward each other—the plaintiff to use ordinary care to avoid injury to himself, and the defendant to exercise the highest degree of care to prevent any injury to the plaintiff."

We are referred to several decisions which sustain the charge. See Treadwell v. Whittier, 80 Cal. 574, 22 Pac. 266, 5 L. R. A. 498, 13 Am. St. Rep. 175; Mitchell v. Marker, 62 Fed. 139, 10 C. C. A. 306, 25 L. R. A. 33; Goodsell v. Taylor, 41 Minn. 207, 42 N. W. 873, 4 L. R. A. 673, 16 Am. St. Rep. 700; Southern B. & L. Ass'n v. Lawson, 97 Tenn. 367, 37 S. W. 86, 56 Am. St. Rep. 804. In our judgment, however, the correct rule, and a rule more in harmony with the decisions in this state (see Michigan Central R. R. Co. v. Coleman, 28 Mich. 440; Grand Rapids & Indiana R. R. Co. v. Huntley, 38 Mich. 537, 31 Am. Rep. 321; Hall v. Murdock, 114 Mich. 233, 72 N. W. 150), is stated in the case of Griffen v. Manice, 166 N. Y. 188, 59 N. E. 925, 52 L. R. A. 922, 82 Am. St. Rep. 630. We quote from that opinion: "If the charge of the trial court is to be sustained, we must hold that the maintenance and operation of an elevator form an exception to the general standard of care imposed by the law upon the owners and occupants of real property. We see no reason for making this exception. The operation of an elevator, no doubt, involves danger, and if accident occurs it may result in most serious consequences. It is not, however, the only dangerous appliance used in modern buildings. The boiler which furnishes steam heat, the conductors through which electric light is furnished, may at times be the cause of serious accidents. An open hatchway is equally dangerous. Yet it has never been attempted to impose upon the owner of a building any greater responsibility as to these matters than that of exercising reasonable care. It is very probable that in the advance of the mechanical arts many new appliances will be introduced into buildings which will involve danger. It seems to me impracticable to distinguish, as to the measure of the owner's duty, between these appliances, and that such an attempt would involve great confusion in the law. I do not wish to be misunderstood. In the exercise of the same degree of care, different degrees of precaution may be necessary. The same man, with equal prudence, will leave an article of furniture unguarded in his house, and carefully secrete or lock up jewelry or money. So, the more dangerous an appliance may be the more attention may be requisite. If the fair purport of the charge of the court was only that the care should be commensurate with the danger, it might not be objectionable. The charge, however, goes for beyond this. The utmost human care and foresight would require the owner of a building to use the most modern and improved form of elevator, the latest successful mechanical device, and the most skillful operators. * * * But common knowledge informs us that such a rule would be unreasonable, applied to elevators in ordinary buildings. There are elevators not only in great office buildings and hotels, but also in small buildings, and even in many private houses. Where there is little traffic, the duty of operating the elevator is at times imposed on an employé or servant with other work to perform. To require in all these cases (and I do not see how it is possible to distinguish between them on the law) the same measure of duty that is imposed on a railroad company or common carrier would be going too far. I think sufficient security is afforded the public when owners or occupants of a building are required to use reasonable care in the character of the appliance they provide and in its maintenance and operation. The stairways are always open to those who deem this degree of diligence inadequate for their protection."

In our judgment, therefore, the court erred in charging the jury that defendant was "bound to exercise the highest degree of care and diligence of a cautious person, so far as human care and foresight can go." Defendant was bound to use the care required of an ordinarily prudent person under the circumstances. This, morally speaking, is a high degree of care, because an ordinarily prudent person, under those circumstances, would exercise such care; but there did not rest upon him the extraordinary obligation required by the charge.

We find no reversible error in the other assignments relied upon. For the error pointed out the judgment will be reversed, and a new trial granted. The other Justices concurred.

Digitized by Google

CURTIS v. CURTIS.

(Supreme Court of Michigan. July 14, 1903.)

CONVERSION—ASSIGNED CAUSE OF ACTION—WRONGFUL SETTLEMENT — EVIDENCE — ADMISSIBILITY — INSTRUCTIONS — PREJUDICIAL ERROR—VALUE OF ACTION—WHAT JURY MAY CONSIDER.

1. Where, in suit for the conversion of a cause of action assigned by plaintiff to defendant to secure a debt, instituted because defendant settled the cause and refused to pay over to plaintiff any of the proceeds arising therefrom, defendant claimed that plaintiff authorized the settlement, evidence that plaintiff was indebted to defendant on a note which, together with the sum admitted by plaintiff to be secured by the assignment, exceeded the sum received from the settlement, and which note defendant claimed was payable on plaintiff recovering judgment in the action assigned, was admissible to show that plaintiff obligated himself to pay the note out of the proceeds of the settlement, though under the law of the case, as acquiesced in by the parties, defendant was entitled to a verdict if plaintiff consented to the settlement.

2. Where a verdict might have been rendered on a ground supported by the law and the facts, or on a ground authorized by erroneous instructions, the giving of the erroneous instructions was prejudicial error.

3. Where, in a suit for the conversion of a cause of action assigned by plaintiff to defendant to secure the payment of a certain debt, plaintiff's testimony tended to prove that the assignment only secured advances made by defendant to plaintiff to enable the latter to carry on the suit assigned, the evidence of defendant that plaintiff was also indebted to him on a note payable when plaintiff should recover judgment in the cause assigned did not authorize defendant to use part of the proceeds arising from a wrongful settlement of the cause by him in payment of the note.

4. In an action for the conversion of a cause of action assigned by plaintiff to defendant to secure the payment of a debt, and wrongfully settled by defendant, the jury were properly authorized to consider the history of the litigation in the action assigned, before the assignment, as bearing on its value.

Error to Circuit Court, Kent County; Willis B. Perkins, Judge.

Action by James A. Curtis against George S. Curtis. Judgment for plaintiff, and defendant brings error. Reversed.

Grove & McDonald, for appellant. Dunham & Malcolm, for appellee.

CARPENTER, J. The parties to this suit are brothers. Plaintiff, as the surviving partner of himself and George H. Outhouse, deceased, had a cause of action against Luther T. Wilcox, at one time sheriff of St. Joseph county, arising from the seizure of stock by said sheriff upon which the partnership composed of plaintiff and said Outhouse had a chattel mortgage. Said cause of action against Wilcox was assigned to defendant to secure the payment of certain indebtedness. After said assignment, the defendant settled said cause of action with the parties responsible therefor for the sum of $1,500 cash. Under the claim that he had a right to the whole of said $1,500 to pay the indebtedness secured by said assignment, defendant refused to pay any of the same to plaintiff. Thereupon the plaintiff brought this suit for the conversion of said cause of action. Defendant pleaded the general issue.

The testimony on the trial conclusively proved that the assignment secured the defendant for moneys advanced by him to the plaintiff to enable him to carry on said suit. These advances, with interest thereon, amounted to about $1,000. The testimony of the plaintiff tended to prove that said assignment secured nothing else. The testimony of the defendant tended to prove that said assignment secured everything that plaintiff owed him, and it is claimed that there was testimony introduced tending to show that plaintiff owed defendant the amount evidenced by a note of $554, which will be hereafter referred to. Defendant testified that the plaintiff consented to and acquiesced in the settlement complained of. Plaintiff denied such consent or acquiescence. From the testimony introduced, the jury might have found that the value of the cause of action was much greater than the amount for which it was settled, or they might have found that it did not exceed that amount. In submitting the case to the jury the court charged that, if the plaintiff consented to or acquiesced in the settlement made by defendant, their verdict must be no cause of action; that, if plaintiff did not agree to or acquiesce in that settlement, defendant was liable in damages for the amount that the cause of action exceeded in value the amount secured by the assignment; that, to ascertain the amount secured by the assignment, they should determine whether the assignment secured the $554 note heretofore referred to or not. The jury, under this charge, rendered a general verdict for the defendant.

Plaintiff seeks a reversal of the judgment below on several grounds, the most important of which is that the court erred in admitting in evidence said $554 note, and that said testimony, when admitted, did not warrant the jury in finding that said note was so secured by the assignment as to give defendant the right to pay the same from the proceeds of the settlement. This $554 note was signed by the plaintiff, and was payable to the defendant. It was given in 1880 in satisfaction of a judgment obtained by defendant against plaintiff. It was not delivered to the defendant, but was delivered to a partnership composed of John L. Curtis, since deceased, brother to the parties, and L. G. Dunton, their brother-in-law. By the agreement of the parties as testified to by the defendant, the note was to be paid when plaintiff recovered against the sheriff of St. Joseph county on the cause of action involved in this suit; and according to the brother-in-law, Dunton, plaintiff was to pay it if he gained that suit. We do not think the court erred in admitting this testimony. On the theory that the settlement complained of was authorized or acquiesced in by plaintiff, defendant had a right, under his testimony that

Digitized by Google

the note was to be paid when the judgment was recovered, to have said note paid out of the proceeds of the settlement; for plaintiff's consent to put an end to the cause of action before the judgment was obtained obligated him to pay the note, or at least furnished evidence from which the jury might find that he so obligated himself. It is hardly conceivable that he could, by consenting to the destruction of a cause of action, entirely terminate his obligation on a claim payable when that cause of action ripened into a judgment.

In reaching the conclusion that this testimony was admissible, we do not overlook the fact that according to the law of this case, as laid down by the trial judge and acquiesced in by both counsel, defendant was entitled to a verdict if plaintiff consented to or acquiesced in the settlement in question. It was therefore not necessary to his defense that defendant should prove that he had a right to keep the entire proceeds of the settlement if that settlement were authorized. Nevertheless, we think he had a right to introduce this evidence. Any other rule would be very unjust. It would place defendant in the position, not of having committed the wrong complained against him, but of having committed another, when the fact was, according to his testimony, he had committed none.

Did the testimony warrant the charge of the court respecting this $554 note? Defendant's counsel contend that the verdict of the jury in favor of the defendant proves that they found that the plaintiff consented to the settlement, and therefore they were in no way affected by the charge of the court respecting said note. We cannot agree with this claim. The verdict might have been rendered upon the ground that plaintiff consented to the settlement, or it might have been rendered upon the ground that the value of the cause of action did not exceed the amount secured by the assignment. If the verdict was rendered upon the latter ground, and if there was, as plaintiff claims, error in the charge respecting the note, such error was prejudicial.

Did the testimony of the defendant warrant the inference that said note was so secured by the assignment as to give defendant the right to pay the same out of the proceeds of the settlement? As already indicated, according to that testimony, the note was to be paid when plaintiff recovered against the sheriff of St. Joseph county on the cause of action involved in this case. Surely, defendant's wrongful settlement of the cause of action did not entitle him to demand payment of an obligation which was payable out of the judgment to be recovered on said cause of action. To hold that it did, enables defendant to take advantage of his own wrong. We think, therefore, the court erred in giving the charge complained of respecting the note.

It is contended that the court erred in charging the jury as follows: "In determining this question [the value of the cause of action], you will take into consideration the nature of the cause of action in that case, the claims made, the amount of indebtedness secured by the mortgage given by Dickerson & Co. to Curtis & Co., the kind and character of the property covered by such mortgage, its value, the various results of the several trials, the general history of the case, as shown by the evidence, the length of time the case was pending before settlement; and from all these, and any other facts and circumstances you may find to be true in the case, determine the actual value of that claim or cause of action." The testimony showed that there had been several trials of the suit brought to enforce said cause of action. Two verdicts had been set aside by this court, and one by the lower court. It is insisted that it was erroneous for the trial judge to permit the jury to consider the various results of these trials, and the general history of the case, as bearing upon the value of the cause of action. We do not think that this was error. The circumstances alluded to had a material and obvious bearing upon the value of that cause of action.

It is also contended that the court erred in instructing the jury at the request of defendant: "Neither courts nor juries can deprive defendant of his property upon evidence which is speculative merely as to the amount of damages the plaintiff may have suffered. * * * The damages cannot rest in speculation merely." It is insisted by plaintiff's counsel in his brief that there was no competent evidence that the damages claimed were speculative. There was evidence, however, that one jury had rendered a verdict for $3,844.66, which the trial judge had reduced to $2,474.31, and that another jury had rendered a verdict for $2,500, and the trial judge had reduced it to $1,181.03. Possibly the language of the court referred to these verdicts. It is obvious that the effect of the charge complained of was to suggest to the jury that there was certain testimony—not definitely pointed out—which might have a tendency to mislead them in measuring damages in favor of the plaintiff, and that this testimony should be disregarded because it was speculative. It would certainly have been better practice for the court to point out clearly what the testimony was which the jury should disregard as speculative. If that practice had been adopted, plaintiff could have had no apprehension that the effect of the court's charge was to induce the jury to disregard all his testimony on the subject of damages. As this is a question not likely to arise on another trial, it is unnecessary to determine whether or not it constituted reversible error.

In our judgment, the case was a proper one for the consideration of the jury. The other assignments of error relied upon are not well

taken, and their discussion would be of no interest to the profession.

The judgment of the court below must be reversed, and a new trial ordered. The other Justices concurred.

ENSLEY et al. v. DETROIT UNITED RY.

(Supreme Court of Michigan. July 14, 1903.)

STREET RAILWAYS—INJURY TO ANIMALS—CONTRIBUTORY NEGLIGENCE—NEGLIGENCE—FAILURE TO CARRY HEADLIGHT—EVIDENCE—DECLARATIONS OF MOTORMAN—RES GESTÆ.

1. In an action against an electric railroad for death of a cow, evidence of plaintiff considered, and *held* not to show that he was guilty of contributory negligence in law.

2. In an action against an electric railroad for death of a cow, testimony of a passenger that, when the car struck the cow, the motorman, while alighting, said: "There, that is running without a headlight," was properly admitted as part of the res gestæ.

3. In an action against an electric railroad for death of a cow, an instruction that defendant's liability under its franchise requiring its cars to be properly lighted, and under the law of negligence, was not materially different; that defendant was obliged to have such a light as would give plaintiff fair notice of its approach; that it was for the jury to say whether the lights were reasonable on the night of the accident, and whether failure to carry a headlight was negligence under the circumstances—fairly presented the law.

Error to Circuit Court, Oakland County; George W. Smith, Judge.

Action by Philo Ensley and another against the Detroit United Railway. There was judgment for plaintiffs, and defendant brings error. Affirmed.

Brennan, Donelly & Van De Mark and Frank E. Jenkins, for appellant. Kinsman & Arnold, for appellees.

MONTGOMERY, J. The plaintiffs were joint owners of a cow which was of the value of $45, and which has furnished the subject-matter of this litigation. There is no question that the cow was killed by coming in collision with a motor car on the line of defendant's road. As the contention is made that there was no case for the jury, we quote at some length from the testimony of plaintiff Cole: "Last summer, August 22d, I resided on Philo Ensley's farm, about one-half mile south of the village of Oxford. I resided upon his farm as a tenant. I had one-half interest in the stock and crops on the farm. I kept twelve head of cows. I can recollect this 22d day of August last. I got the cattle up for the purpose of milking them at 3 o'clock in the afternoon, because I had to furnish milk for the milkmen. The weather was cloudy and threatened to rain, and, after milking the cows, I fed them their corn in the stable on account of rain. About 8 o'clock in the evening I turned the cows out. The barn is situated on the east side of the highway, and the electric railway is situated in the center of the highway, and the house is on the west side of the highway. The pasture in which I turned the cows is on the east side of the highway. That evening about 8 o'clock I had gone across to the house to feed the hogs, and, after I got the hogs fed, I thought I would turn the cows out, and I came across and looked up and down, and I saw no car coming from any direction, and I went and opened the gate that goes to the lane, so that, when I got there, they would go right in, providing I had to crowd them in. I let them out, and kept constantly looking up the track for a car, and I see no car coming then from either direction. Heretofore it has been the custom of the company to carry a headlight. I never noticed the car come down at night without a headlight neither way. I could see north towards the village clear about eight-tenths of a mile. I saw no signs of any car. I saw no signs of any light or any car at all. Q. After looking carefully, you looked down the road at the same time? A. Yes, sir. Q. Now, after looking both ways, what did you do? A. I turned the cows out. Q. What did you do with them? A. I turned them out, and drove them right into the pasture—that is, into the lane—and just before I got to the lane gate I looked around to see if any car was coming, and there was one right onto me within three or four rods, and I rushed right across the track (I was on the west side of the track when I saw the car coming, and I rushed right across the track), and there was one of the cows started on a run down the track, and I got in around those, rushed them through the gate, and shut the gate. As soon as I got them in, the car was by me. The car was within three or four rods of me when I saw it first. I drove the cows in and shut the gate. I could hardly keep the cows from the gate while I shut it. It would have been impossible for me to have got around that cow. This car that came down had no headlight that evening. It had no light in front of it at all. It was quite dark. rather dark and cloudy, and it was about 8 o'clock. It was about 325 feet south of there that the cow was hit. That is the distance where they rolled the cow off the track."

It is insisted that this testimony shows plaintiff to have been guilty of contributory negligence. In support of this contention it is said: "Neither on direct or cross examination did Mr. Cole testify that he at any time looked for the car after leaving the barnyard gate until the cows were within twenty feet of the lane gate, and part of them way over on the west side of the track." Counsel must have overlooked the following, appearing in the direct examination of the witness: "I let them out, and kept constantly looking up the track for a car, and I saw no car coming from either direction." As he was driving the cattle down the track, where he had a plain view, it would seem that, if he con-

¶ 2. See Evidence, vol. 20, Cent. Dig. §§ 332, 367, 933.

Digitized by Google

stantly kept looking up the track (from which direction the car in question came), he did about all that could be expected.

Objection is made to the admission of the testimony of a passenger as to a statement made by the motorman at the time of the collision. He testified under objection that, when the car struck the cow, witness, the conductor, and the motorman got out of the car, and that while the motorman was getting out of the car, before he got out, he said, "There, that is running without a headlight." This was admitted as a part of the res gestæ, and we think properly.

An effort is made to liken the case to Dompier v. Lewis (Mich.) 91 N. W. 152, but the case is clearly distinguishable. In this case the exclamation was made at the very time of the injury, and related to the very fact; in the former case it was in the nature of a narrative of a past event, and did not relate to the very fact of the injury. The question put to the witness in the present case was somewhat broader than the answer itself, and in this holding we confine our decision to the case as disclosed by the answer of the witness.

The principal complaint in the case relates to the charge of the court on the subject of lights. The defendant's franchise contract contained the following: "That the cars of said railway shall be of modern type, propelled by electricity or any other motive power, except steam, which is or may become suitable for railway purposes, and must be properly lighted in the nighttime, whether standing or running." The circuit judge charged the jury upon this subject as follows: "The franchise for the township of Oxford, where the accident occurred, contains the provision that cars must be properly lighted in the nighttime, whether standing or running. Now, what do the words 'properly lighted' mean? They do not mean necessarily that the car be equipped with a headlight, or, if with a headlight, that it should be an electric headlight rather than one provided or furnished by the use of oil. The question of whether it was light or dark must be carefully considered in determining whether the car was properly and sufficiently lighted or not. If, in fact, it was light enough so that the plaintiff Cole, in exercising due diligence to protect his own interests, could have seen the approach of the car a considerable distance, then the question of lighting the car would be of no importance. Any light or no light would be sufficient in that event. Now, regardless of the franchise, and under the general liability of the defendant's company for negligence, it would be liable for any failure to use reasonable care in the lighting of its car in front, so as to give a fair and reasonable notice to persons desiring to use the highway next to the track. That would not necessarily mean that it should use a headlight, any more than the language used in the franchise; but it would mean that, if the darkness was such that the plaintiff Cole could not otherwise see its approach, then the car should be so lighted as to give the plaintiff fair and reasonable notice of its approach if he looked. Now, gentlemen, I leave that whole question to you, and say to you that under the peculiar wording of that franchise the liability for violation of the franchise does not differ greatly from what the ordinary liability of the defendant would be under the law of negligence. My construction of that language would be that there should be such a light in front as would give the plaintiff reasonable and fair notice of its approach had he looked. Now, gentlemen, it is for you to say whether the lights that evening, as described, are reasonably or properly within that definition or not. It is the claim of the plaintiffs that in order to constitute a reasonable and fair notice, or to comply with the franchise, it is necessary to have a headlight. Now, gentlemen, if it be true that the light from the window that has been described—from the bull's-eye light and from the windows—would give the plaintiff Cole fair and reasonable notice of its approach, then I say to you that it would not be negligence not to have a headlight; but if, under all the circumstances, you determine that those lights were not and did not give the plaintiff Cole, or would not give him, fair and reasonable notice of its approach, then you might find that the headlight was necessary to comply with the ordinances to relieve them from liability for negligence. That would depend, gentlemen, on what you determine from the evidence. What I mean to say is, gentlemen, that the failure to carry a headlight is not of itself, standing alone, full proof of negligence. It might be negligence, and it might not, depending on what other lights were in front of the car."

We think this instruction fairly presented the question to the jury. See Rascher v. Street Railway Company, 90 Mich. 413, 51 N. W. 463, 30 Am. St. Rep. 447; McGee v. Street Railway Company, 102 Mich. 107, 60 N. W. 293, 26 L. R. A. 300, 47 Am. St. Rep. 507.

The record presents no other questions meriting discussion.

The judgment is affirmed. The other Justices concurred.

AUSTIN v. DETROIT, Y. & A. A. RY.

(Supreme Court of Michigan. July 14, 1903.)

STREET RAILWAYS—ADDITIONAL SERVITUDE —LOWERING GRADE — PRESUMPTION — CONSTRUCTION OF ROAD AT SIDE OF HIGHWAY.

1. The construction and operation of a street railroad on a highway is not an additional servitude.

2. An abutting owner has no right to compensation because the grade of a highway is lowered for a street railroad which is built to conform thereto, though the highway is owned

¶ 1. See Eminent Domain, vol. 18, Cent. Dig. §§ 305, 307.

Digitized by Google

by a plank road company, the change of grade being with the consent of it and of the township.

3. An abutting owner has no right to compensation because a street railroad is constructed, on a lowered grade, so close to the side of the highway as to subject his fence and land to the danger of sliding into the highway.

4. The lowering of the grade of a highway by a street railway company without objection by the township will be presumed to be with its consent.

Montgomery and Moore, JJ., dissenting.

Error to Circuit Court, Wayne County; George S. Hosmer, Judge.

Action by Hugh Austin against the Detroit, Ypsilanti & Ann Arbor Railway. Judgment for plaintiff. Defendant brings error. Reversed.

Cutcheon, Stellwagen & MacKay, for appellant. E. M. Vining and J. Emmet Sullivan, for appellee.

HOOKER, C. J. The defendant is the owner of an electric trolley line between Detroit and Ann Arbor, its railroad being laid in the public highway, in accordance with statutory authority, under licenses from the respective municipalities along its route. The township of Nankin granted the right to construct the road in the following language, viz., "Grants and conveys unto Thomas D. Kearney, attorney, his associates and assigns hereafter to be organized into a corporation under the laws of the State of Michigan, exclusive right and privilege of constructing and maintaining perpetually a street railway for the transportation of passengers and light freight, along, upon or adjacent to the highway, known as Chicago Road, etc., with all necessary and convenient turnouts, switches," etc., subject to the rights in said highway of the Detroit & Saline Plank Road. It also provides that "the track or tracks of said railway should be so laid as to obstruct as little as possible the free passage of carriages and vehicles along said highway and so as to best accommodate public travel." This highway was one maintained by the Detroit & Saline Plank Road Company, under the plank road act (Comp. Laws 1897, c. 173), and the railroad was built with the consent of said company. The plaintiff owned and occupied a farm upon said highway, along the east side of which ran the Flint & Pere Marquette Railroad, which crossed the highway in question a few rods east of the plaintiff's house. The railroad was about eight feet above the natural surface of the ground bordering the highway, which its trains crossed above grade by means of a bridge which was 15 feet long. To make room for the passage of teams under the bridge, the highway was graded down some feet at the intersection of the railroad, the cut extending westerly to a point about 15 feet west of plaintiff's dwelling. By consent of the plank road company, the traveled portion of the highway was widened and lowered, by grading, to accommodate the electric road, and a new bridge, both wider and longer than the old, was built by, and at the joint expense of, the two railroad companies. The electric line was laid along the north side of the highway, near to the line of the street, nearly the entire width of the roadway, including the bed of the railway track being cut down to a uniform grade, so that the cut reached the level of the highway, as it theretofore existed, some rods west of the plaintiff's house, which left plaintiff's premises some three or four feet higher than the roadway where the cut was deepest, the ground being cut back to within a foot or two of his fence at the surface, and sloping thence to the track. A flight of five or six steps was built by the railroad company from the track up to the level of the land in front of plaintiff's house. This action was brought to recover damages for an alleged injury to plaintiff's premises, and defendant has appealed from a judgment of $475 in plaintiff's favor.

It is the settled law that the public right to the highways goes to the extent of authorizing their use for the general purposes of public travel, and, as conditions change, the way may be adapted to new wants and methods of travel, including the equipment and use of electric railroads. The courts hold with great unanimity that the public right, when acquired, contemplates the use of the way for such purposes, and that the adjoining proprietor must suffer the contingent disadvantages of a change of grade, and that the use of the highway for an electric line is not an additional servitude. See Fuller v. Grand Rapids, 105 Mich. 529, 63 N. W. 530; Pontiac v. Carter, 32 Mich. 164; Dean v. Ry., 93 Mich. 330, 53 N. W. 396; 10 A. & E. Enc. of Law (2d Ed.) 1125. Green v. City Ry. (Md.) 28 Atl. 626, 44 Am. St. Rep. 288.

The plaintiff's contention in this case is that the railroad company had no right to cut off or impair his access to the highway from his premises by lowering the grade for its track below the highway as it then existed, and by laying it so close to the line of the highway as to subject his fence and land to the danger of sliding into the highway. The Supreme Court of the state of Ohio has enunciated the doctrine that an abutting proprietor might recover damages if his access to the highway was impaired—Street Ry. v. Cumminsville, 14 Ohio St. 523—which is consistent with the rule that damages arising from a change of grade are recoverable, which rule we understand to obtain in that state, in opposition to the view generally taken. Had this railway been laid in the center of the street without change of grade, and so constructed by filling between the rails as to make it feasible for the public to drive upon and over it at will, no one will claim that it would be an additional servitude; or, had the line as built been so filled as to make it practicable for vehicles to be driven upon it as upon other parts of the way, the same would be true, except for the change of grade.

Digitized by Google

We take judicial notice that in rural districts the traveled portion of the road is but a small part of the land within the limits of the highway. It is manifest that in such places the railway may be more safely operated if built at one side and used separately. It is evident from the franchise that the authorities thought so in this instance, and required it to be kept away from the traveled portion. There was therefore no necessity for making a smooth way between the rails and adjoining the track, and it might have been imprudent to do so, thereby inviting travelers to unnecessarily drive in a place of danger. So long as it does not offer a comparatively insuperable obstacle to the use of the portion of the highway occupied by it for purposes reasonably necessary, and reasonable provisions are made by crossings for ingress and egress over it to and from adjoining premises, the owner of such premises cannot complain, if he could in any case, which we do not decide.

It is said that the grade of the street was made necessary by reason of this railway. It is well settled that an adjoining proprietor cannot complain if the grade of a highway is changed. The authorities may lawfully facilitate travel by such changes. We have held that a street railway is not an additional servitude, and the reason is that it is a provision made by public authority to facilitate public travel. It is the use of the highway, for the original purpose, by modified and changed vehicles and methods. If the public weal requires it, it is as much within the power of the public to lessen the grades for street cars as for wagons or automobiles. To say that the township or company might have changed this grade to improve its wagon road for the latter without recompense to adjacent proprietors, but that it could not do so for a street railway, or that a street railway is an additional servitude when the authorities permit the highway to be graded down for the purpose, and not when it is made to conform to the pre-existing surface of the highway, is to make a distinction where none should in justice exist. We are of the opinion that the location of a railway in the center of the highway cannot be required by an abutting proprietor. There is a manifest propriety in separating, so far as possible, this from other uses of the highway. In the present case the franchise required it, and apparently the public authorities acquiesced in its location. The same may be said of the grade, so far as the public had control over it. The authorities authorized the change in the bridge, and the plank road company, which represented the public, in a sense, in the maintenance of the highway, and might lawfully grade the highway, for its full width, under the statute permitting the organization of plank roads, through its president (who was also president of the defendant) consented to the widening and lowering of its grade, with a view to the improvements authorized by law and the township. The statute authorizing street and suburban railways, like that providing for steam roads, is predicated upon public necessity. It is not to be assumed that such roads are burdens upon the inhabitants, but that they confer benefits to the general public. Such companies as are provided for are not created primarily for their own benefit, but for a desirable public purpose. It is not the province of courts to assume that these statutes are to be so strictly and technically construed as to prevent full measure of efficiency. One of these statutes requires the railway to be laid at the same grade as the highway. This is a proper provision, but we disbelieve that it was the intention that where this was not feasible, in view of existing grades, no railway could be constructed, or that the adjacent proprietors acquired rights to compensation in consequence. It is not unreasonable to suppose that the construction of a safe and satisfactory railroad may require some changes in the grade of the highway as theretofore existing, e. g., by filling or cutting and widening the graded portion, by lessening the grade of hills, adapting the road under bridges to the proper level, etc. The public authorities have the right to do these things when there is no railroad, and, to say that they must do it where it is only made imperative by the necessities of the use of the street for a railroad, is too narrow a construction. The law expressly recognizes the desirability of lessening grades for all uses of a highway, but highway improvements are necessarily gradual, owing to the expense. When a railroad is made, it is a substantial, expensive, and permanent improvement. It must not only be laid at grade, but, under any fair construction of the statute, it must be kept at grade. There is a manifest propriety, if not a necessity, that the township authorities provide for such general grades as may be advisable, and cause them to be made at that time, and there is, to our minds, no impropriety in imposing upon the railroad the burden of these changes for the general public good. It is said that the contract does not include any such provision. An attempt to include specifications of all such changes would be attended with much detail, and perhaps difficulty. We think it not unreasonable or improper to infer that the railroad company would not be allowed to make extensive changes in the grade of highways without the approval and acquiescence of the public authorities, who, as we have shown, have the authority to cut down the grade, without further compensation to abutting proprietors. So long as the authorities do not object and take steps to prevent such changes as will permit of a proper construction of the road that they have authorized, we must assume consent, and the abutting proprietors cannot complain. It is inferable from the proof in this case that the steam railroad would have

been an insuperable obstacle to laying this road at the pre-existing grade, as there was not room for the passage of the car beneath it without lowering the highway at the bridge, and it seems to have been necessary to widen the highway at that point. At all events it was done, and the trolley company paid one-half of the cost of an expensive bridge to accomplish crossing below the steam road grade. The township authorities had the power to consent to the construction of this road, and this necessarily implies consent to a readjustment of highway grades, within reasonable limits, with the sanction of those having authority under the law to make them. The consent to construct this road, and the acquiescence of all concerned in the change of grade, is a sufficient consent. The public cannot question it, and the plaintiff has no right of action in consequence. The case differs materially from that of Nicholas v. A. A. & Y. Ry., 87 Mich. 361, 49 N. W. 538, 16 L. R. A. 371, for there the road was not made to conform to the grade of the highway. Here it is required. Comp. Laws 1897, § 6450. The cases of Green v. Atlantic Ry. Co. (Md.) 28 Atl. 626, 44 Am. St. Rep. 288, Briggs v. Ry. Co., 79 Me. 363, 10 Atl. 47, 1 Am. St. Rep. 316, and Petticord v. B. C. & E. Co., 34 Md. 464, sustain the authority of a plank road company to change its grade without subjecting itself to liability, and, if it may do this, no good reason is suggested for holding defendant liable for doing the same, with the assent of the plank road company, in a project for the benefit of the highway authorized by law. The case of Uline v. N. Y. C. & H. R. R. R. Co., 101 N. Y. 98, 4 N. E. 536, 54 Am. Rep. 661, is analogous upon the question of the authority of the railroad company to act under a delegated power.

There are many assignments of error in this case, but we think the more important questions are the following: (1) Is the construction and operation of this railroad an additional servitude? (2) Has an abutting owner a right to compensation by reason of the lowering of the grade of the highway? (3) Was it unlawful to place the railroad to the side of the highway, in proximity to plaintiff's premises, and is he entitled to compensation therefor? (4) Does the fact that the highway in question was owned by a plank road company, or the changing of the grade of the highway to accommodate the railroad, affect the question? We think all of these questions are answered by our discussion of the subject.

The jury should not have been allowed to infer that the construction of the railroad constituted an additional servitude because of its location, or by reason of the excavation made for it, or for the impairment of access to plaintiff's premises by reason thereof.

The court did not err in instructing the jury that damages were not recoverable because of the prevention of the hitching of teams, in front of plaintiff's premises, under the declaration. Hobart v. R. R. Co., 27 Wis. 200, 9 Am. Rep. 461.

We think it unnecessary to discuss other questions.

The judgment is reversed, and a new trial ordered.

CARPENTER and GRANT, JJ., concurred with HOOKER, C. J.

MONTGOMERY, J. (dissenting). The defendant is the owner of an electric trolley line between Detroit and Ann Arbor, its railroad being laid in the public highway, in accordance with statutory authority, under licenses from the respective municipalities along its route. The township of Nankin granted the right to construct the road in the following language, viz., "Grants and conveys unto Thomas D. Kearney, attorney, his associates and assigns hereafter to be organized into a corporation under the laws of the State of Michigan, exclusive right and privilege of constructing and maintaining perpetually a street railway for the transportation of passengers and light freight, along, upon or adjacent to the highway, known as Chicago Road," etc., subject to the rights in said highway of the Detroit & Saline Plank Road. It also provides that "the track or tracks of said railway should be so laid as to obstruct as little as possible the free passage of carriages and vehicles along said highway and so as to best accommodate public travel." This highway was one maintained by the Detroit & Saline Plank Road Company, under the plank road act (Comp. Laws 1897, c. 173), and the railroad was built with the consent of said company. The plaintiff owned and occupied a farm upon said highway, along the east side of which ran the Flint & Pere Marquette Railroad, which crossed the highway in question a few rods east of the plaintiff's house. The railroad was about eight feet above the natural surface of the ground bordering the highway, which its trains crossed above grade by means of a bridge which was 15 feet long. To make room for the passage of teams under the bridge, the highway was graded down some feet at the intersection of the railroad, the cut extending westerly to a point about 15 feet west of plaintiff's dwelling. By consent of the plank road company, the highway was widened and lowered, by grading, to accommodate the electric road, and a new bridge, both wider and longer than the old, was built, by, and at the joint expense of, the two railroad companies. The electric line was laid along the north side of the highway, near to the line of the street, nearly the entire width of the roadway, including the bed of the railway track being cut down to a uniform grade, so that the cut reached the level of the highway, as it theretofore existed, some rods west of the plaintiff's house, which left plaintiff's premises some three or four feet higher than the

Digitized by Google

roadway where the cut was deepest, the ground being cut back to within a foot or two of his fence at the surface, and sloping thence to the track. A flight of five or six steps was built by the railroad company from the track up to the level of the land in front of plaintiff's house. This action was brought to recover damages for an alleged injury to plaintiff's premises, and the defendant has appealed from a judgment of $475 in plaintiff's favor.

The plaintiff's contention in this case is that the railroad company had no right to cut off or impair his access to the highway from his premises by lowering the grade for its track below the highway as it then existed, and by laying it so close to the line of the highway as to subject his fence and land to the danger of sliding into the highway. The defendant contends, on the contrary, that the plaintiff's property has been subjected to no additional servitude. In the case of Detroit City Railway v. Mills, 85 Mich. 634, 48 N. W. 1007, the court held that the construction of an ordinary electric railway in the streets of a city corresponding to the grade of the street was not an additional servitude. But in Nichols v. Street Railway Company, 87 Mich. 361, 49 N. W. 538, 16 L. R. A. 371, it was held that the street railway act confers no power upon a railway company to construct a road along the line of a highway within two or three feet of the side of the road, where the roadbed does not conform to the grade of the street, but is built upon a grade with cuts and fills—in that case the cuts and fills being two feet or thereabouts. It is sought to distinguish that case from the present in this: It is said that, while defendant's road does not conform to the grade as it existed when the contract with the township was made, the grade has since been changed by defendant with the consent of the plank road authorities, so that now the track is laid at grade. This is in effect saying that, while the defendant is not authorized to build a roadbed for its own use not conforming to the general grade, it may change the grade of the entire road, with the track, without regard to its effect upon adjacent owners, if it can get authority from the plank road company to do so. A reference to the statutes may throw light upon this question. Section 6446 provides that a company may construct, use, maintain, and own a street railway for the transportation of passengers, in and upon the streets and highways of any township, upon such terms and conditions as may be agreed upon by the company and the township board. Does this statute contemplate that the township authorities may turn over to the street railway company the authority to wholly change the grade of its streets? I apprehend that no one will assert this authority without at least some misgivings. But even if this power be deemed to be granted to the township board by the section in question, it is sufficient for the purpose of this case to say that the township authorities never exercised that power, and never assumed to confer upon the defendant railway the right to change the grade of this street. The grant is set out above. It is simply a grant of the privilege of constructing and maintaining a street railway along the line of, upon, or adjacent to the highway known as the "Chicago Road," subject to the rights in said highway of the Detroit & Salina Plank Road, and contains a provision that the track or tracks shall be so laid as to obstruct as little as possible the free passage of carriages and vehicles along said highway, and so as best to accommodate public travel. One might look long and earnestly, but in vain, to find within the four corners of this contract any suggestion of a right in the company to wholly change the grade of this highway.

But it is said that the plank road company might change the grade for its own purposes, and that it has granted the right to the defendant company to change the grade, and that therefore the injury to plaintiff's property is damnum absque injuria. Here, again, a reference to the statute is not unprofitable. The Legislature has provided, by section 6470, that a street or electric railway may agree with a toll-road company for a purchase of all or any portion of the rights and franchises of such company, and in case of failure to agree there may be a condemnation; but the statute contains the express provision that the provisions of this act shall not be so construed as to affect the rights of abutting property owners or the rights of the public in such highways. In view of this provision, can it be said that the plank road company may agree with the street railway company that for its own purposes it may regrade a portion of the highway in a manner which injuriously affects the adjacent owner, and this without authority from the township board? We think it clear that no such right exists. Independent of this statutory provision, the difficulty to my mind is as obvious. The right of the plank road company is a special privilege and right, it terminates with its charter, its use of the highway is limited to such use as is essential for the purposes indicated by its charter, and it is reasoning in a circle to say that it may, under cover or pretense of enlarging its own uses of the power, evade the requirement of the statute which limits the use of a street railway to such as is agreed upon with the township board, and confer authority upon the street railway which the township board withholds. For the reasons stated, I think it clear that the plaintiff was entitled to recover such damages as he sustained.

Other questions are raised by counsel which may be briefly considered. The declaration claimed damages to the plaintiff's land by reason of the excavation of that portion of the highway adjacent to his premises. Complaint

Digitized by Google

is made that the circuit judge in his charge stated that this railway track, constructed as it was, constituted an additional servitude, and that evidence was given that the fence and soil would probably fall because of the excavation, and also as to the inconvenience in going up the steps onto the plaintiff's land. We think it may be said of this testimony that it did no more than describe the situation, and was not intended to afford a basis for damages. In fact, an inspection of the photograph of the premises, which was introduced in evidence, would of necessity exhibit these conditions and authorize the inferences drawn by the witnesses.

The court charged the jury that the occupation and excavation of that portion of the road was unlawful, and that the plaintiff was entitled to recover such damages as would compensate him, limiting the damages to the amount which the land actually depreciated in value on account of the peculiar construction of the road, and distinctly stated to the jury: "It is the damages for the excavation, and not for the operation of the road." He also instructed the jury that the plaintiff was not entitled to recover any damages because of the fact that teams could not be hitched in front of his house, as that claim was not covered by the pleadings. We think this instruction fully protected the defendant's rights, and that it was not error to permit the jury, in determining the damages caused by the excavation, to take into account the fact that plaintiff's fence would be more likely to fall by reason of such excavation.

We think that no error was committed to the prejudice of the defendant, and the judgment should be affirmed, with costs.

MOORE, J., concurred with MONTGOMERY, J.

STATE ex rel. DOUGLAS, Atty. Gen., v. VILLAGE OF HOLLOWAY et al.

(Supreme Court of Minnesota. July 10, 1903.)

VILLAGES—INCORPORATION—FARMING LANDS.

1. Rules laid down in State v. Village of Minnetonka, 59 N. W. 972, 57 Minn. 526, 25 L. R. A. 755, and State v. Fridley Park, 63 N. W. 613, 61 Minn. 146, in respect to including unwarranted territory in the incorporation of villages, under chapter 145, p. 148, Gen. Laws 1885, followed and applied, and the incorporation of the village of Holloway, in Swift county, *held* illegal.

(Syllabus by the Court.)

Quo warranto by the state, on the relation of W. B. Douglas, Attorney General, against the village of Holloway and others. Writ of ouster issued.

W. B. Douglas, Atty. Gen., and E. T. Young, for relator. Brown & Kerr, for respondents.

BROWN, J. Information in the nature of quo warranto to determine the validity of the incorporation of the village of Holloway, in Swift county. The facts, as they appear from the pleadings, and about which there is no real controversy, are substantially as follows: The people residing at the railway station called "Holloway" sought to incorporate the same into a village under and pursuant to the provisions of chapter 145, p. 148, Gen. Laws 1885. There were only about 100 inhabitants in the village, residing upon the land embraced within the village plat—40 acres; and, to obtain the requisite population, it became necessary to include within the boundaries of the village adjacent territory. To this end, a petition was presented to the county commissioners to incorporate the territory shown by the following plat as such village (the dotted line is the boundary of the proposed village, and the small square at Holloway is the platted portion):

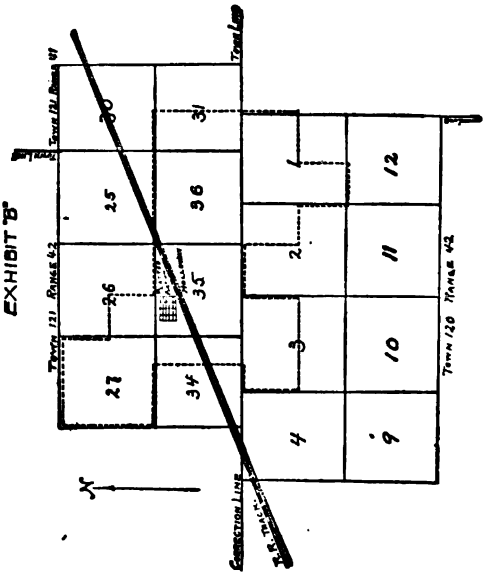

The land included within the limits of the corporation, except the platted portion of 40 acres, is wholly devoted to agricultural purposes, and occupied by resident farmers, with their families. It will be noticed that the proposed village embraces nearly six full sections of land, is about five miles long, and all the way from one to two miles in width, except in one portion, where its width is about one-half mile. The case comes clearly within the principles laid down in State v. Village of Minnetonka, 57 Minn. 526, 59 N. W. 972, 25 L. R. A. 755, and State v. Village of Fridley Park, 61 Minn. 146, 63 N. W. 613, and the decisions there made are controlling. The question needs no further discussion than is found in those cases, aided by the attached plat of the village, which speaks for itself.

It is urged, however, by respondent, that chapter 111, Gen. Laws 1903, remedied the objections here made, and confirmed and legalized the action of the board of county commissioners in creating the village. That

Digitized by Google

act was intended to cure irregularities and defects in the proceedings leading up to the incorporation, and not questions like that here presented—of an unwarranted inclusion of territory within the corporate limits. The same may be said of chapter 31, Gen. Laws 1903. Chapter 59, p. 131, Gen. Laws 1902, has reference solely to proceedings to detach territory from villages already incorporated, and has no bearing upon the question here presented.

Our conclusion is that a writ of ouster should issue, and it is so ordered

---

SANBORN et al. v. VAN DUYNE.

(Supreme Court of Minnesota. July 10, 1903.)

DEED — ESTATE CONVEYED — EASEMENT — LEASE—VALIDITY — CONSTITUTIONAL LAW—ESTOPPEL—ACTION TO RECOVER REALTY.

1. Plaintiffs were in 1883 the owners in fee of certain lots near the west bank of the Mississippi river in St. Paul, and conveyed to said city, by a properly executed deed, a "perpetual easement for the purpose of a public levee over and upon" the same. The city never constructed a levee thereon, and the lots have never been used for levee purposes. Prior to this conveyance the city attempted to acquire the lots for levee purposes by condemnation proceedings, but the same were, when completed, deemed invalid, and were, in effect, abandoned, though plaintiffs demanded the damages assessed to them therein; but the city refused to pay the same except upon the execution of the deed aforesaid. In 1891 the city, acting under and pursuant to chapter 34, p. 255, Sp. Laws of that year, leased the property to defendant for private purposes. Defendant took possession thereof, erected buildings thereon, and now occupies the same, carrying on a manufacturing business. Though plaintiffs knew of defendant's occupancy of the property, they made no claim thereto until shortly before the commencement of this action. *Held*:

2. That the city acquired an easement only by the deed from plaintiffs, the latter retaining the fee to the land, together with such right of possession and beneficial use as would not be inconsistent with an exercise of the rights granted the city. The legal rights of the parties are in no way affected by the condemnation proceedings, but are fixed by the deed of conveyance.

3. That the lease of the property by the city to defendant, under chapter 34, p. 255, Sp. Laws 1891, was void, and conferred no right of possession in defendant as against plaintiffs. The act of the Legislature under which the lease was made is unconstitutional, as attempting to divert property acquired by the city for a public use to an inconsistent and private use.

4. That plaintiffs are not estopped from asserting their rights against defendant.

5. That defendant's possession of the property is, as against plaintiffs, wrongful and unlawful. The latter may maintain this action, and are entitled to such relief as the evidence may show them entitled to.

(Syllabus by the Court.)

Appeal from District Court, Ramsey County; Bunn, Judge.

Action by John B. and Walter H. Sanborn against Frank Van Duyne, doing business as the St. Paul Show Case Manufacturing Company. Judgment for defendant, and plaintiffs appeal. Reversed.

John B. & E. P. Sanborn, for appellants. B. H. Schriber, for respondent.

BROWN, J. Action to recover the possession of certain real property and for equitable relief, in which defendant had judgment, and plaintiffs appealed.

The facts are as follows: Plaintiffs were, on June 25, 1883, the owners in fee of the land in controversy, viz., lots 1 and 2, block 183, Robertson's addition to West St. Paul, near the west bank of the Mississippi river; and on that day, for a valuable consideration to them paid, conveyed to the city of St. Paul a "perpetual easement for the purpose of a public levee over and upon" the same. The deed was duly recorded. The trial court found that plaintiffs were the owners in fee of the lots at the time of the conveyance, and that they had not since conveyed or parted with their title, except as evidenced by the deed just referred to; so that they were at the time of the commencement of this action the owners of the land, subject to the easement conveyed to the city. In 1890 the city graded as a part of a street a strip of land lying south of the lots, and the lots have since been graded and brought up to a level with such street; but the city has never constructed a levee upon or across them, nor have the lots ever been used by the city as a public levee. In 1891 the Legislature of the state, by chapter 34, p. 255, Special Laws of that year, attempted to confer upon the city power and authority to lease the lots to individuals for private use; and on May 17, 1892, the city council, acting upon that authority, passed and adopted an ordinance to that end, thereby leasing the lots to defendant and one Cook, who thereupon took possession, erected buildings thereon, and ever since have, and now do, occupy the same for manufacturing purposes. Plaintiffs do not own any property abutting upon the lots in question, and according to the findings of the trial court the city has not abandoned any rights acquired by it through the conveyance from plaintiffs. The trial court found as conclusions of law: (1) That the city of St. Paul, by virtue of the deed from the plaintiffs, acquired the exclusive right to the possession and use of said property for a public levee, but acquired no right to use it for any purpose foreign thereto; (2) that the lease of the property to defendant and Cook was unauthorized and void, and defendant's possession of the same is wrongful and unlawful; and (3) that plaintiffs, not being injured by the wrongful and unlawful acts of defendant, have no right to maintain this action.

1. The first question presented for our consideration is as to the nature and character of the title or right heretofore acquired to the property by the city. It is contended by respondent that by certain condemnation proceedings it acquired the absolute title; that for this reason, if for no other, plain-

Digitized by Google

tiffs have no standing in court. It appears that some time prior to the conveyance from plaintiffs the city attempted to acquire the property for levee purposes by condemnation proceedings. Such proceedings were properly instituted and conducted to completion, commissioners appointed, damages assessed and awarded to plaintiffs, but no notice of the confirmation of the report of the commissioners was ever given as required by law. This failure on the part of those conducting the proceedings rendered their validity doubtful in the opinion of the city attorney, and the municipal authorities, on his advice, refused to pay the damages assessed to plaintiffs, which they demanded, except upon the execution by them of a deed to the city; whereupon plaintiffs executed and delivered the deed already referred to, and the city paid to them the amount of damages awarded in the condemnation proceedings as consideration therefor. It is claimed by respondent that plaintiffs, by demanding the damages awarded them, acquiesced in and ratified the proceedings, and are estopped from questioning their validity; and that by force of certain provisions of the statutes the fee title to the premises passed to the city. We are unable to concur in this view of the case. We need not stop to determine whether the absolute title to real property may in any case be acquired by a municipality in proceedings to condemn it for a public use, for it is clear that in the case at bar both parties treated the condemnation proceedings as void, and contracted independently of them. The proceedings to condemn were deemed defective by the municipal authorities. For that reason they declined to pay plaintiffs the damages awarded therein, and consented to do so only on the execution of the deed. The parties are bound by the contract as evidenced by the deed. The city can no more repudiate the deed and assert rights under the condemnation proceedings than plaintiffs can repudiate the deed and be heard to assert the invalidity of the condemnation proceedings. The parties adjusted their matters on the basis that such proceedings were invalid. Plaintiffs executed the deed, and thereby conveyed to the city whatever right or title it now possesses in or to the premises, and by that the rights of the city must be measured. It follows, therefore, that the trial court was right in holding that the parties are bound and that their rights are fixed by the deed, and not by the condemnation proceedings.

2. Respondent also contends that, irrespective of the condemnation proceedings, the deed of conveyance from plaintiffs vested in the city the absolute title to the property, and that it could thereafter make such a disposition and use of it as it might deem for its best interests. The intention of the parties as expressed in the written contract, the deed, must control the determination of this question. The description of the property conveyed, as contained in the deed, is as follows: "All that tract or parcel of land lying and being in the county of Ramsey in the state of Minnesota described as follows, to-wit: A perpetual easement for the purpose of a public levee over and upon lots one (1) and two (2). * * * * *" Counsel cites some authorities in support of this contention, but they are not in point; at least we do not understand them to go to the extent claimed. In Vail v. Long Island Ry. Co., 106 N. Y. 283, 12 N. E. 607, 60 Am. Rep. 449, there was a clear intention on the part of the grantor, expressed in the deed of conveyance, to transfer the fee and absolute title to the grantee. In the case at bar the plain and unambiguous language of the deed leaves no substantial doubt but that plaintiffs intended to grant to the city an easement only. The consideration paid for the transfer of land might, in a case where the writing left the extent of the estate intended to be granted in doubt, be a very proper matter for consideration in construing the contract. Flaten v. Moorhead, 51 Minn. 518, 53 N. W. 807, 19 L. R. A. 195. But there is no doubt as to what the parties intended to do in this case.

3. It is further contended by respondent that, whatever may be the nature of the city's title, it was authorized by chapter 34, p. 255, Sp. Laws 1891, to lease the property for a private use, and that defendant's rights under the lease are superior to plaintiffs'. The act of the Legislature relied upon provides that "the common council of the city of St. Paul are hereby authorized, by ordinance, to lease to any person, persons, company or corporation any part or portions of the levee known as West St. Paul levee, * * * the said leases to be for such purposes and upon such terms * * * as the common council of said city shall prescribe." The levee there referred to forms a part of the land in question. It may be conceded that the Legislature has control over the streets and public highways within the state, and of all property acquired by it for a similar public use, and that it may abandon and vacate the same whenever, in its opinion, public interests may require such action, or authorize and empower municipal authorities so to act. Moffett v. Brainerd, 26 L. R. A. 821. But, as the state's right or title to such property is only an easement which it holds in trust for a public use, the Legislature cannot divert it, or subject it to an inconsistent use of a private nature; nor can it authorize municipal authorities so to divert it. Fairchild v. St. Paul, 46 Minn. 540, 49 N. W. 325. Private property cannot be taken, under the Constitution and laws of this state, nor authorized by the Legislature to be taken, either directly or indirectly, for a private use; and, if it be held that, after acquiring property for a public use, the Legislature may divert it to a private use, in the manner shown in this case, it may do indirectly what it cannot do directly, and accomplish what the Constitution forbids. Any

Digitized by Google

legislation authorizing such action would be clearly unconstitutional and void. Portland Ry. Co. v. Portland, 14 Or. 188, 12 Pac. 265, 58 Am. Rep. 299; Warren v. Lyon City, 22 Iowa, 351; Winchester v. Capron, 63 N. H. 605, 4 Atl. 796, 56 Am. Rep. 554; In re John and Cherry Sts., 19 Wend. 659. These are elementary principles, and there is no conflict in the decided cases upon the subject. The trial court very properly held that the lease relied upon by defendant is utterly void, and of no force or effect. The act of the Legislature under which it was made is unconstitutional.

4. We come, then, to the question whether plaintiffs are entitled to any relief in this action. The trial court held that defendant's possession of the property was wrongful and unlawful, but that no relief could be granted plaintiffs, because a possession of the property by them, such as defendant now has, would be as wrongful and unlawful as defendant's. We do not concur with the learned trial judge in this view of the case. By the conveyance to the city plaintiffs transferred merely the dominion of the property for a specific purpose, retaining in themselves the absolute ownership, and the right to such possession by them as would not be inconsistent with the rights of the city follows as a matter of law. They are entitled to every beneficial use and the value of every use to which the property may be put, and not interfere with the rights of the city under its easement. In Dillon on Municipal Corporations, § 633, it is said: "In such case the owner of the land, whether dedicated for use of a highway or street, or square, or common, retains, if there be no controlling statute, the exclusive right in the soil for every purpose of use or profit not inconsistent with the public easement, and may maintain appropriate actions for any encroachment upon it." And again (§ 633): "Where the public acquires only the use, and the fee remains in the original proprietor or abutter, the latter is considered to be the owner of the soil for all purposes not inconsistent with the public rights, and may maintain actions accordingly. Thus it has been held that he may maintain ejectment against an individual who without lawful authority erects a private building upon a public square under a lease from the local authorities, they having no power to authorize such a use. The recovery is, of course, subject to the public easement." The same rule is laid down in Washburn on Easements, p. 10, where it is said: "The owner of the soil and freehold of the land over which a road is laid, may have trespass against a stranger for acts of trespass done upon the land—as for cutting a tree or digging up the soil—and may have ejectment to recover the land if deprived of the possession of it by him. In other words, he has exclusive seisin and the right of possession of the soil, subject only to the easement of the public." See, also, Peck v. Smith, 1 Conn. 132, 6 Am. Dec. 216; Bailey v. Sweeney, 64 N. H. 296, 9 Atl. 543; Jordan v. Woodward, 40 Me. 317. The authorities very generally hold that the owner of the fee to real property, which is subject to an easement for the purposes of a street, public square, landing, or levee, is entitled to possession against one who enters upon the same and erects a building thereon to the exclusion of the owner of the fee, and who is using it for a purpose foreign to the public right. Washburn on Easements, 254; Gardiner v. Tisdale, 2 Wis. 198, 60 Am. Dec. 407; Weisbrod v. Ry. Co., 21 Wis. 602; Woodruff v. Neal, 28 Conn. 165; Strong v. Brooklyn, 68 N. Y. 13; Coburn v. Ames, 52 Cal. 245, 28 Am. Rep. 634; Lyon v. McDonald, 78 Tex. 711, 14 S. W. 261, 9 L. R. A. 295. And authorities are not wanting to the effect that the owner of the fee in such cases is entitled to an injunction against any person who is occupying or using the property for private purposes. Williams v. Ry. Co., 16 N. Y. 97, 69 Am. Dec. 651. In Warren v. Mayor, 22 Iowa, 357—an action by the owner of land which he had granted for a public park—the court held that an injunction would issue to restrain a diversion of the property from that use. The court said: "If a grant is made for a specific and limited purpose, the subject of the grant cannot be used for another and different one, and the grantor still retains such an interest therein as entitles him in a court of equity to enjoin such diversion." In Robert v. Sadler, 104 N. Y. 229, 10 N. E. 428, 58 Am. Rep. 498, it was held that a public easement in a street does not justify the digging of pits and removing gravel therefrom, and an injunction will lie by the owner of the fee to restrain such acts. In Bradley v. Pharr, 19 L. R. A. 647, it was held that the owner of the fee in a street is entitled to an injunction restraining one from operating a private railroad thereon, the municipal authorities having granted defendant therein the right to do so. In that case the injunction was granted upon the ground that plaintiff was the owner of the fee of the land in the street, and not on the ground of injury as owner of abutting property. In O'Neil v. Sherman, 77 Tex. 182, 14 S. W. 31, 19 Am. St. Rep. 743, it appeared that plaintiff had deeded to the city of Sherman a tract of land for street purposes, and the city subsequently gave permission to a contractor to sink artesian wells thereon, and plaintiff brought an action to restrain him. The relief was granted, the court holding that the city acquired nothing but an easement by the conveyance from plaintiff, and for street purposes only, and had no right to sink wells, or otherwise injure the property, or grant permission to any other person to do so.

It is not important that plaintiffs in the case at bar were not the owners of abutting property. They conveyed the entire lots in question to the city, and are in no way in-

Digitized by Google

jured or prejudiced as owners of abutting property; but they own this property, subject to the right of the city to devote it to the purposes of its grant, and whatever rights an abutting owner might have are possessed by them, and founded, not in abutting ownership, but in ownership of the property itself. The property, upon an abandonment of the same by the city for the purposes of a public levee, would revert to plaintiffs; and, though the trial court found as a fact that the city has not abandoned it, it also found that a public levee had never been constructed thereon, or used by the public for that purpose. It is not important whether a "levee" be defined to mean a landing place for vessels, or a dyke or breakwater, the finding of the trial court is general, and covers both. It is clear, therefore, that the occupancy of defendant in no way interferes with any rights exercised or intended to be exercised in behalf of the public, and, if his occupancy be not inconsistent with the rights of the city, plaintiffs may enjoy the same privilege. They clearly have the right to occupy and enjoy the property for whatever purpose it may be utilized in preference to a stranger to the title. The trial court was right in the conclusion that the city had no authority to lease the property to defendant, and that his possession of it is wrongful and unlawful; but wrong in holding that plaintiffs are without a remedy simply because their occupancy, if they should take possession of the premises, would be as wrongful and unlawful as that of defendant. The action is not against the city to determine any of its rights, but against a stranger, a trespasser and wrongdoer, under the findings. Plaintiffs could not recover against the city, for its rights have not been terminated by abandonment or otherwise; but under the authorities cited they are entitled to relief as against defendant. About all the authorities cited by defendant in support of this branch of the case involved the rights of the municipality, and are not in point. Such were Goode v. City of St. Louis, 113 Mo. 257, 20 S. W. 1048; Curran v. City of Louisville, 83 Ky. 628, and Reilley v. Racine, 51 Wis. 526, 8 N. W. 417.

5. Defendant contends that plaintiffs by their conduct are estopped from questioning either the validity of the lease to defendant or defendant's possession of the property thereunder. The trial court found as a fact, in connection with this feature of the case, that subsequent to the conveyance by plaintiffs the property was stricken from the tax rolls, and since then plaintiffs have paid no taxes thereon, nor have they asserted any right or title to the land until shortly before the commencement of this action, though they have had at all times full knowledge of the uses to which said property was being put. This finding does not bring the case within the equitable rule of estoppel. Plaintiffs' title, as well as the city's, was of record, of which defendant was charged by law with notice; and he was bound to know that the city had but an easement in the property. He was thus fully advised of all the facts concerning the rights of the city, and was not by any act on the part of plaintiffs misled to his prejudice. In view of this, plaintiffs were not bound to act promptly in making claim to the property, or to give prompt or other notice of their asserted rights. An estoppel in pais arises when by his acts or representations, or by his silence when he ought to speak out, intentionally or through culpable negligence one person induces another to believe certain facts to exist, and such other, having the legal right to do so, relies and acts thereon to such an extent as to be misled to his prejudice. But this rule has no application when all the facts are within the knowledge of both parties. Western Land Co. v. Banks, 80 Minn. 317, 83 N. W. 192; Pence v. Arbuckle, 22 Minn. 417. In addition to the record notice, with which defendant was charged as a matter of law, his lease was executed by the city under the provisions of chapter 34, p. 255, Sp. Laws 1891, which act became a part of his contract. That statute was the only authority under which the city attempted to act, and by its terms and provisions the lease was expressly made subject to all vested rights. Clearly, there is no room in this case for an application of the equitable doctrine of estoppel.

Judgment is reversed, and new trial granted.

LEWIS, J., took no part.

SCHEIFERT et al. v. BRIEGEL et al.

(Supreme Court of Minnesota. July 3, 1903.)

RIPARIAN OWNERS—NONNAVIGABLE LAKE—DISAPPEARANCE—DIVISION OF LAKE BED.

1. Riparian owners of a nonnavigable lake, the waters of which have disappeared, own that portion of the lake bed inclosed by extending lines from the points where the side division lines of each respective tract cross the meandered line to the center of the lake.

2. When such lake is of irregular shape, and originally contained no inlet or outlet, the inequalities caused by the broken shore line should be equitably adjusted between the contiguous owners by disregarding such irregularities, or by treating the lake as composed of separate bodies of water, according to the conditions.

3. Where such lake bed slopes to the center, and the shore line is broken and irregular, it is not a proper method of division to establish central points and central lines in different portions of the lake, and extend the side lines of the different riparian divisions to such central points and central lines approximately dividing the land according to the lake frontage of each tract. Such division is not equitable, and not according to law.

(Syllabus by the Court.)

Appeal from District Court, Sibley County; Francis Cadwell, Judge.

Action by George Scheifert and others against John Briegel and others. From an order denying a new trial, Swan Rydeen and others appeal. Reversed.

The following are the plats referred to in the opinion:

Digitized by Google

Plat of Sections 17, 18, 19, and 20 in Township 112, Range 31 West of the 5th Pr. Mer. Minn., Showing Subdivisions of Said Sections According to Government Field Notes, and Showing Subdivisions of Lake Therein between Riparian Owners, Known as Lake Swan in County of Sibley and State of Minn.

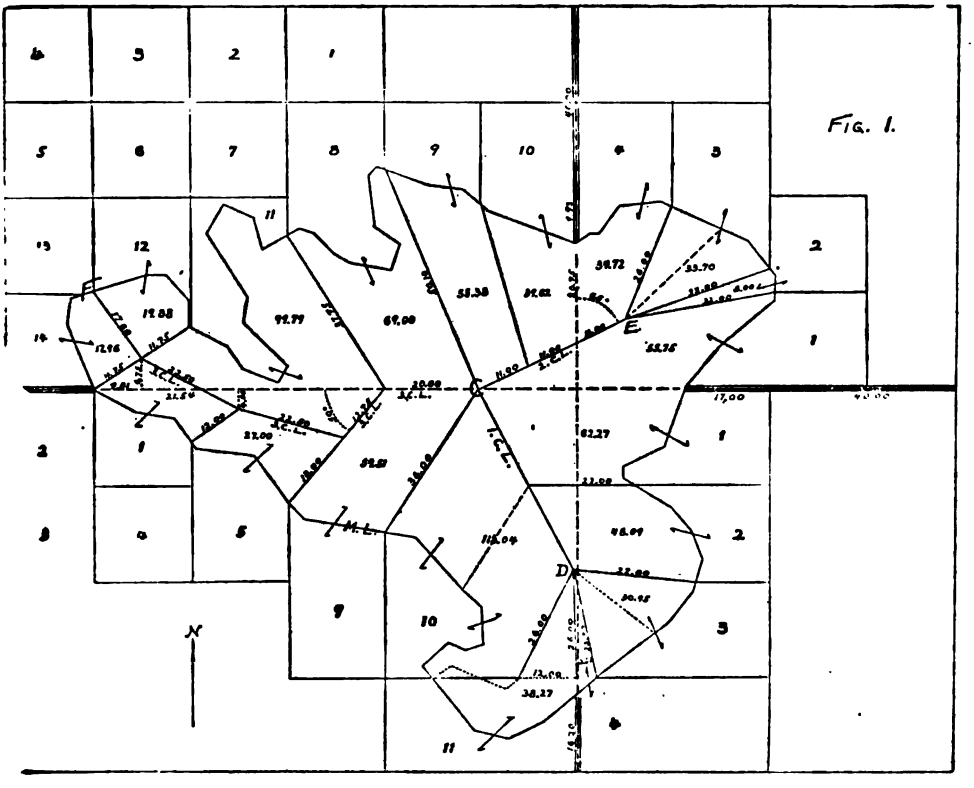

FIG. 2.

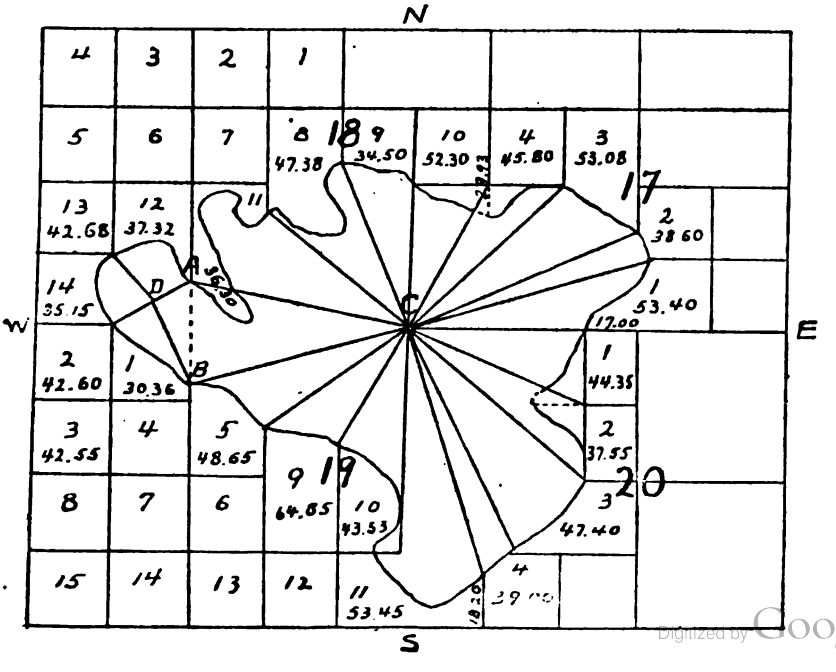

Digitized by Google

Albert L. Young, for appellant Briegel. John Lind and A. Ueland, for appellant Rydeen. Geo. A. McKenzie and W. H. Leeman, for plaintiff respondents. Jos. A. Eckstein and Daniel T. Halvorsen, for certain defendant respondents.

LEWIS, J. Swan Lake, in Sibley county, meandered and nonnavigable, originally contained several hundred acres, occupying portions of sections 17, 18, 19, and 20, township 112, range 31. For a great many years it has been gradually drying up, and at the time of the commencement of this action was practically dry land, and the various shore owners commenced this proceeding for the purpose of partitioning the bed of the lake. The trial court divided the land in accordance with the plat, Figure 1, and for the purpose of division established three central points, C, D, and E, connecting them by center lines, marked upon the plat, 1 C. L., 2 C. L., and 3 C. L. Having established these center points and center lines, the court divided the land among the several owners by extending the side lines of the several tracts from the point where they crossed the meander line to points C, D, and E, and to points on the center lines as indicated by the plat. Certain of the property owners complain of the result upon the ground that the division is unequal. Some of them contend for the rule that the dividing lines should radiate to the center of the lake; others insist that it is not practicable to establish a center for division in a lake of this character, but that it was proper to adopt center lines. The latter, however, are not satisfied with the center lines established by the trial court, but suggest certain modifications, and propose that, with proper center lines established, the side division lines of the several fractions be extended at right angles to the center lines.

The question presented, then, is, what is the proper method of dividing the bed of the lake under such circumstances? In Lamprey v. State, 52 Minn. 181, 53 N. W. 1139, 18 L. R. A. 670, 38 Am. St. Rep. 541, it was stated that shore owners take to the center of the lake, but in that case there was under consideration merely the question whether the shore owner was entitled to that portion of the land exposed between the meander line and the water, which had perceptibly receded, as against a patentee of the land from the United States government, and the question as to what should constitute the center of the lake, and when that method should be varied or strictly applied, was not before the court. In Shell v. Matteson, 81 Minn. 38, 83 N. W. 491, the only question involved was the constitutionality of chapter 257, Laws 1897, and that act was held unconstitutional upon the ground that the riparian owners held title to the center of the lake. In Hanson v. Rice (Minn.) 92 N. W. 982, the inquiry was whether or not one of the owners should be restricted to the full government subdivision in which the fraction of his land was located, and be cut off from the lake by extending the land of an adjoining shore owner. In the discussion of that question, in which the court declined to follow the Wisconsin rule, it was said that each owner was entitled to the land between the shore and the center of the lake. But in that case the meander line as drawn by the government survey was incorrect, and the dispute was in dividing up the land between the meander line and the lake proper.

The rule has long been established that riparian owners upon a stream take to the center of the current. Schurmeier v. St. Paul & Pacific Railroad Company, 10 Minn. 82 (Gil. 59), 88 Am. Dec. 59; Olson v. Thorndike, 76 Minn. 399, 79 N. W. 399. But we have no knowledge of any attempt to apply this rule to lakes, where there is no inlet or outlet. It would seem reasonable that where a lake is long, and comparatively narrow, it may be treated as a river, and a center line established from one end of the lake to the other, which should be considered the thread of the stream. Such rule could also, for the same reason, be adopted in case of irregularly shaped lakes, where there had been an inlet and outlet, and through which there might have been either a real or theoretical current, which would be deemed to be the center line. In such cases the various owners may be said to have purchased their property with a view to the original situation. In the case before us the evidence does not disclose whether originally, or in times of high water, there was an inlet and an outlet to the lake, nor does it appear whether there is a gradual slope towards the center on all sides of the lake. The theory upon which the court proceeded was that the method adopted accomplished a more equable division among the various owners than any other system, but the manner in which the waters receded from time to time were not taken into account. Because of the irregular shape of the lake, a division made by running the side lines of the various fractions to the center would be unequal, and unjust to the owners of those fractions peculiarly situated, and apparently for this reason the central point principle of division was rejected. It is apparent that in the method adopted there was an attempt to combine two systems—one running the side lines to the center points of the lake, and the other to run them to center lines, which, theoretically, were the thread or middle of the stream. The application of the center-line principle to this lake presents very serious difficulties. In the first place, we discover no rule according to which the center lines were established, except that they were run from the three principal points, F, D, and E, Fig. 1, to the center point C, as nearly as possible equidistant from the adjacent shore. The question arises at once, what better reason is there for running a center

line from F, in the manner indicated, than from the bay in lot 11, section 18, or from the bay in lots 8 and 9, section 18? And, if the center line may properly begin at the shore line F, why should not the center line, D, be extended to the shore at the west line of lot 4, section 20, and why should not the center line terminating at E be extended to the shore between lots 3 and 4, or between 2 and 3? It is evident that these lines were drawn and center points located without reference to any natural condition of the original lake, either in respect to depth or natural current, and, so far as we are able to see, resulted in arbitrary division without regard to the legal rights of the owners.

There is no doubt that the division must be made according to the principle applicable to accretions or relictions, as noticed in Hanson v. Rice, supra. As before stated, where the shores of a lake are comparatively even, and the lake is either round or long, few difficulties arise in applying one of the principles of division above mentioned; but where the shore line is uneven, and the body of water of an irregular shape, the difficulty comes in avoiding a conflict of different interests. In the New England states many questions have arisen in reference to the division of lands which have accumulated along the seashore between low and high water mark, and the courts have aimed to establish a principle which would result in giving the riparian owners an equal division in the accumulated soil. For instance, in Gray v. Deluce, 5 Cush. 9, in dividing the flats which had accumulated in a cove between high and low water, a base line was run across the mouth of the cove, and parallel lines were drawn at right angles with the base lines from the ends of the division lines of the channel to low-water mark. In that case the flat to be divided was of the same width as the channel, and the result was that each proprietor was given an equal division, and the division lines could, therefore, be extended without variation. But in the case of Rust v. Boston Mill Corporation, 6 Pick. (Mass.) 158, the cove was circular, and the distance across its mouth shorter than the shore line of the upland, and the division was made by causing the side lines to converge upon the base line at the mouth of the cove so as to divide the accumulation proportionately. Again, in the case of Emerson v. Taylor, 9 Greenl. 42, 23 Am. Dec. 531, there was a conflict of interests, and the base line was drawn between the two points where the side lines of division crossed the high-water mark, and from such base line, at right angles to it, lines were extended to low-water mark, and, the shore being on a curve, the various extensions thus made left a surplus or loss, which was divided evenly between the adjoining parcels. A review of many of the New England cases upon this subject will be found in a note to the Northern Pine-Land Company v. Bigelow Company, 21 L. R. A. 776. In all of them the courts were dealing with the space left bare by the receding waters, or with land which had accumulated, the main body of water being still in existence. The principle running through the decisions is that the riparian owner actually owns that part of the accretion which lies between the points where the division lines cross the margin in a straight direction to the center of the channel, and, if there is no channel, then converging to a common center. Cases have arisen where, from the very nature of the situation, these general rules could not be strictly applied. As stated in Walker v. Boston & Maine Railroad, 3 Cush. 1: "Many coves, inlets, and estuaries of rivers are so irregular and various in outline, and so traversed by crooked and meandering creeks and channels, from which the sea does not ebb, that it is utterly impossible to apply to them any of the rules which have been applied to other cases." The difficulty to be anticipated in dividing up the bed of a lake where there is no center line is stated by Mr. Justice Campbell in Lincoln v. Davis, 53 Mich. 389, 19 N. W. 103, 51 Am. Rep. 116: "In carrying out lines of ownership in narrow streams, it is easy to find the general course of the stream, and to draw lines perpendicular to that course from the terminal shore lines. But on lakes all lines from the shore tend to converge in some central part of the lake, and, while irregularity of shape prevents drawing them to a common center, they must all, if protracted, cross each other in a perplexing way. The rule adopted in such waters, where the whole surface could be appropriated, has always been to divide the water area in proportion to the shore frontage, and never to attempt any division by lines run from the shore, except over such parts of the lake as are substantially adjacent to the shore. In some cases, by a fair partition, a shore owner would, by his extent of shore line, obtain a share beyond the center. But it seems impossible, if the whole water is to be regarded as divided up, to reach a division without some proceeding in the nature of a partition, which will fix the various possessions." And again, in the case of Jones v. Lee, 77 Mich. 35, 43 N. W. 855, the same learned justice, in discussing the general question, states: "It appears clearly enough in the present case that, while there is a considerable frontage facing northwest or southeast, the lake being longest in that direction, there must also be large end frontages which look up or down the lake perpendicularly, or nearly so, to any line across from bank to bank, at most places along the shores. If this body of water were not navigable, and if all its waters could in any way be apportioned among the riparian proprietors for any lawful purpose, it is evident that it could not be done by reference to any filum aquæ, or middle

thread, but must be done by some rule of proportion, which probably could only be got at by some partition proceeding, inasmuch as such waters are common for all ordinary uses." And in Hardin v. Jordan, 140 U. S. 402, 11 Sup. Ct. 808, 35 L. Ed. 428, the court says: "If there should arise any question between the plaintiff and other riparian owners of lands situated on the margin of the lake as to the convergence of the side lines of the plaintiff's land in the lake, it can be disposed of by the parties themselves by a resort to equity, or to such other form of procedure as may be proper." And in referring to the difficulties of applying the general rules of division it was said: "Where a lake is very long in comparison with its width, the method applied to rivers and streams would probably be the most suitable for adjusting riparian rights in the lake bottom along its sides, and the use of converging lines would only be required at its two ends."

To return to a consideration of the lake bed in question, eliminating the center line theory for the reason already stated, we are unable to apply any principle of ownership to the disputed land except the one already recognized by this court in the decisions above noted; i. e., that the several riparian proprietors own that portion of the increase immediately adjacent to and included in the triangle made by projecting lines from the points where the side division lines respectively cross the marginal line to the center of the lake. Had the waters only receded a few rods from the marginal line, there would be little difficulty in dividing up the strip of land thus laid bare; but in proportion as the water receded toward the center the difficulties would increase, and, now that the water has entirely disappeared, we find the side lines converging upon one another to such an extent that the rule cannot be strictly applied. Whatever inequalities or injustice may arise from these conflicting interests caused by the irregularity of the shore must be solved upon some equitable basis which will, as nearly as possible, give to each proprietor that portion of the increase which belongs to him. In the first place, what is the center of the lake bed? Is it the center of the figure (lake bed), or is it the deepest portion to which point the waters gradually receded and at last disappeared? The latter might coincide with the former, but, where the two do not coincide, which should control? If the waters had receded, leaving some of these small bodies of water at different points in the original lake, division might be made upon the theory that they constitute independent lakes, to be treated as central points. But, as a general rule, such conditions do not exist, and the center of the figure must be accepted as the common center. An examination of the plat Fig. 2, where a central point, C, is assumed, discloses that, if a division be made according to this principle, lot 1, section 20, will have an advantage over lot 2, which lies immediately south, on account of the peculiar formation of the point or projection of land which extends into the lake. The same thing occurs in lot 4, section 17, and lot 10, section 18, the latter having the advantage, and a difficulty arises as between lots 10 and 11, section 19. The chief difficulty, however, is in reference to lots 1, 12, and 14, at the western end of the lake. Commencing with lots 1 and 2, in section 20, lot 1 should not be permitted to have the advantage given it by the projection into the lake at the intersecting line between 1 and 2. The inequality occasioned by this irregularity in the shore ought to be divided between the parties immediately affected. It is a fair adjustment as between the two lots that such projection be ignored, and the division line running to the center point start, not at the marginal line, but at the point where the division line of lots 1 and 2 crosses a line drawn from the point where the northerly side line of lot 1 crosses the marginal line to the point where the south line of lot 2 crosses the marginal line as indicated on Fig. 2. This would result in giving to lot 2 a slight portion of the increase directly in front of the southwest corner of lot 1. The same principle applied to lot 4, section 17, and lot 10, section 18, makes an equable division, as indicated on the plat. In respect to lots 10 and 11, section 19, the inequality may be adjusted as indicated on the plat. This arrangement gives lot 10 all it is entitled to, and gives lot 11 no credit for the small bay of the lake where the dividing line between the lots crosses the marginal line. Lot 12, section 18, bordering on the southwest corner of the lake, had a considerable water frontage, but, on account of the peculiar shape of the point of land at the southerly part of lot 11, the division line between lots 11 and 12 crosses the marginal line at a point too far south to leave any considerable portion of the lake bed adjacent to lot 12, and the interests of lots 1, 11, 12, and 14 conflict in any attempt to divide up the bed immediately in front of those lots. There are two ways of adjusting this inequality: First, by disregarding the point of land at the southerly end of lot 11, and dividing the space on the principle applied to lots 1 and 2, section 20; and, second, treat the bay bordering on lots 1, 14, and 12, west of the dotted line A, B, as an independent lake. The latter method might very properly be applied if, as the waters receded, some portion were cut off from the main part of the lake by a ridge across the neck of the bay, or if there were a deep central point where the water remained last. The evidence is silent on the subject, and we can only assume that such condition did not exist, and that the lake bed slopes gradually from west to east. However, even if such were the case, this bay may be treated by analogy as a separate lake, and by so doing the interests would ap-

Digitized by Google

pear as indicated in the plat Fig. 2, assuming D to be the center point. This arrangement leaves the irregular tract A, B, D, C, less the portion of lot 11 within its borders, the property of the owners of lots 1, 14, and 12, which should be apportioned between them by the court in accordance with the acreage acquired by each in the bay west of the dotted line A, B.

We are aware that in applying this method of dividing the lake bed it will be a matter of some difficulty to find the exact center points. They may be located by the interested parties by common consent, and, if they cannot agree, a competent surveyor can ascertain them by actual tests, or by the application of a mathematical rule which is used for the purpose. It is also apparent that some of the divisions of land thus allotted would be of no practical value on account of their peculiar shape. No doubt the small tracts would be purchased by the larger holders, or be otherwise adjusted to make the land practically useful.

The method of adjustment here suggested may not be suitable for the division of all irregular lake beds, but we have aimed to outline a plan which will give the riparian owners as near as possible what is theirs by law. Let it be understood that the effect of this decision is not to direct a division of the lake in question according to Fig. 2. We have attempted only to lay down certain principles which may be applied in case the facts shall prove to be as we have assumed them to be. Upon a new trial evidence should be taken as to the history of the lake, and the division worked out as near as may be in accordance with the principles herein defined.

Order reversed, and new trial granted.

RYAN v. DONLEY et al.

(Supreme Court of Nebraska. Nov. 20, 1901.)

APPEAL—REVIEW—WAIVER—RELEASE OF ERRORS — PROPERTY IN CUSTODIA LEGIS — LEASE—COVENANT FOR MORTGAGE—VALIDITY.

1. A stipulation, in an action pending in a district court, that the property which is the subject of the controversy shall be sold, and the proceeds deposited with the clerk, until it shall be determined which party to the action is entitled to them, and that, if the sale shall be made before the matter shall be fully litigated, the funds shall be paid out when the court shall have made an order that one or the other party is entitled to them, is not effectual as a release of errors and a waiver of the right of review in this court. An intent by the parties to bar themselves from the right of access to the courts must be manifested by express words or by the strongest implication.

2. The pendency of an action for the foreclosure of an alleged chattel mortgage, in which a temporary injunction has been granted restraining the defendant from selling, consuming, or disposing of the property in controversy during the pendency of the action, does not withdraw the property from pursuit by general creditors of the alleged mortgagor in another court by means of the ordinary procedure of a suit at law, judgment, and execution. In such case the property is not in the custody of the law, but the principles applicable are those pertaining to the doctrine of lis pendens.

3. A covenant in an unrecorded lease for the term of five years, at an annual rental payable annually, to the effect that the lessee shall, on the 15th day of June in each year, execute to the lessor a chattel mortgage on the growing crops to secure the payment of the rent for that year, is void as to the creditors of the lessee.

Commissioners' Opinion. Department No. 3. Appeal from District Court, Saunders County; Sedgwick, Judge.

"Not to be officially reported."

Action by Michael D. Ryan against Patrick Donley and others. Judgment for plaintiff, and defendants appeal. Reversed.

Burr & Burr and V. L. Hawthorne, for appellants. John H. Barry, for appellee.

AMES, C. In 1895 the plaintiff and appellee, Ryan, being the owner of a farm in Saunders county, executed a lease thereof to one Patrick Donley for the term of five years, beginning on the 1st day of March, 1896, reserving an annual rent of $440, payable on the 1st day of January. It was covenanted in the lease that, if the average yield of crops of all kinds in any one year should be less than 20 bushels to the acre, the lessor should accept one-half the same in lieu of the cash rent reserved for that year, but that the lessee should "execute a promissory note of $440 on June 15th of each year during the term of his lease, for the payment of the rent for such year, said note to be secured by chattel mortgage on all the crops to be raised on said premises for such years." Donley went into possession under the lease, which was not filed for record, but in 1897 refused to execute the note and mortgage provided for in the above-recited covenant, and on the 31st day of July in that year Ryan began this action, alleging the breach of the covenant and the insolvency of Donley, and that the latter was threatening and about to sell, dispose of, and consume the growing crops, and by so doing defeat the plaintiff of his rent for that year, and that the average yield of the crops for that year would exceed 20 bushels per acre. The petition prayed for an injunction restraining the defendant from selling, incumbering, or consuming the crops, or any of them, and that the plaintiff be decreed to have a mortgage on the same for the sum of $440, as of date June 15, 1897, and that the mortgage be foreclosed and the property sold thereunder, and the proceeds of such sale, or so much thereof as should be necessary, applied to the satisfaction of said alleged indebtedness and costs of suit. A temporary injunction was allowed as prayed, and the order therefor filed with the papers in the case; but no service thereof, or of the summons, is disclosed by the transcript, and it does not appear therefrom when actual knowledge there-

Digitized by Google

of came to the defendant or to the subsequent parties to the case. On the 13th day of December, Donley confessed a judgment in the county court in favor of the appellant Lehr for the sum of $381.30 and costs of suit, and on the same day an execution thereon was issued to the appellant Martin, as constable, and by him levied on a quantity of grain raised on the premises in that year, and claimed to be subject to the alleged lien of the plaintiff's lease.

On the 16th day of December the plaintiff filed a supplemental petition, joining Lehr and Martin with Donley as defendants thereto, and setting forth the judgment, execution, and levy, and alleging that all such proceedings were had with knowledge by all the parties thereto of the pendency of the plaintiff's action, and of the injunction therein, and in contempt thereof and of the court, and were void, and praying an additional injunction restraining Lehr and Martin from selling or removing the property or any of it under the levy. An additional temporary injunction was granted as prayed. A motion to dissolve this latter temporary injunction was made by Lehr and Martin, and overruled. Then they filed a general demurrer to the supplemental petition, which was also overruled, whereupon they filed an answer thereto, admitting the judgment, execution, and levy, and the existence of the lease, and denying every other allegation therein contained. The plaintiff filed a reply, but it contains no new matter calling for consideration by the court. Donley entered an appearance, but did not answer either of the plaintiff's pleadings or otherwise participate in the defense. On the 11th day of January, 1898, the plaintiff and Lehr made a stipulation to the effect that the latter should haul the grain to market and sell it, and receive a certain compensation from the proceeds for his service in so doing, and that the residue of such proceeds should be "deposited with the clerk of the district court until it is determined which party—the said Lehr and Martin, or Ryan—is entitled to hold the property so levied upon in favor of Lehr by the constable, Martin, and when the court shall have made an order that one or the other of the parties, viz., Lehr or Ryan, is entitled to the proceeds of the sale of said property, in the event of the sale of the same before the matter is fully litigated, then the clerk shall pay the same according to the order of said court." The property was accordingly sold, and the proceeds, amounting to $474.95, deposited with the clerk pursuant to the stipulation, and out of it Lehr was paid $27, his compensation for making the sale. At the May, 1898, term, Donley was adjudged in default for want of answer, and after a trial without a jury the court entered a judgment upholding the lease as a valid lien by way of mortgage upon the property in controversy for the sum of $440 and interest, adjudging the execution levy to be void, as in violation of the injunction, of which the judgment creditor and constable were found to have notice, and making the temporary injunctions perpetual, and directing that the money, the proceeds of the sale of the property, then in the hands of the clerk, be applied, first, to the payment of the costs of the suit; second, the payment of $27 compensation to Lehr for selling the property pursuant to the stipulation; and, third, to the satisfaction of the plaintiff's lien—the surplus, if any, to be retained by the clerk, subject to the further orders of the court.

The circumstances are such that it will be convenient to begin with the discussion of the contentions of the appellee, plaintiff below. He insists, first, that the above-recited stipulation, providing that the property should be sold and the proceeds disposed of as the court should order, amounted to a release of errors and waiver of the right of appeal, and submitted the matter finally to the judgment of the trial court. There is no such express agreement in the instrument, and, in its absence, an intent by a litigant to bar himself of the right of access to the courts should only be made out of the strongest implication. Such an inference cannot, in our opinion, be drawn from a stipulation requiring the money to remain in the hands of the clerk until it is determined which party is entitled to it, and expressly contemplating that the matters in controversy shall be "fully litigated." In our opinion, the stipulation contemplates a final determination of the suit after it has been fully litigated, which includes the right to litigate in this court, if either party desires to do so.

A more important matter of dispute in the case may be conveniently stated in the form of the following inquiry: May A., by beginning a suit against B. for the enforcement by foreclosure and sale of a real or pretended lien upon the property of the latter, and procuring a temporary injunction restraining the sale or disposition of it by him during the pendency of the action, withdraw it from the reach of the general creditors of B., having notice of suit and of the existence of the injunction, so that they may not resort to another court, and pursue it, and appropriate it to the satisfaction of their claims by means of the ordinary procedure of an action at law, judgment, and execution? There are three classes of cases in which decisions have been made upon somewhat similar questions. Most of these cases have arisen out of real or seeming conflictions between the federal and state courts; but the fact that in such cases the courts owe their origin and jurisdiction to the federal and state governments, respectively, does not affect in any way or degree the principles involved in the decisions. The first is when the defendant, after the beginning of the suit, resorts to another court for the purpose of restraining its prosecution, or compelling the cancellation of the instrument sued upon, or of obtaining a de-

Digitized by Google

cree adjudging it fraudulent and void, and the like. It is universally held that this course cannot be permitted, because the court first acquiring jurisdiction of the parties and of the controversy is entitled to retain the cause and pursue it to a final judgment and execution, or other disposition, without interference from any other court of co-ordinate or inferior jurisdiction, and that to permit the practice in question would be, in effect, to allow the defendant to make his defense in another tribunal than that in which the first suit is pending, and thus defeat the jurisdiction of the latter court. Belonging to this class are the cases of Insurance Co. v. University (C. C.) 6 Fed. 443, 10 Bliss. 191, Mason v. Piggott, 11 Ill. 88, Insurance Co. v. Howell, 24 N. J. Eq. 239, Bank v. Railroad Co., 28 Vt. 470, and many others that might be cited. In fact, the principle is so obvious that authorities in its support ought not to be required.

There is another class of cases in which a court of competent jurisdiction has actually taken possession of the property which is the subject of the action for the purpose of applying it, or disposing of it, or adjudging the possession of it, in such manner as the rights of the parties in litigation in an action before it may require, or when the property has been seized upon process issuing out of the court, or taken into custody by a receiver appointed in the action, and some person not a party to the suit, but asserting some claim or demand against the defendants therein, or some lien or charge upon the property, or both, resorts to another court of co-ordinate jurisdiction, and, by means of process issued out of the latter, seeks to dispossess the court, and its officers, in which the first action was begun and is pending. It is universally held that this practice cannot be tolerated, because it would lead to breaches of the peace and unseemly contests between the different courts and their officers, and result in endless complications and inextricable confusion. Belonging to this class are Buck v. Colbath, 3 Wall. 334, 18 L. Ed. 257; Gaylord v. Railroad Co., 6 Biss. 286, 291, Fed. Cas. No. 5,284, and Heidritter v. Oilcloth Co., 112 U. S. 294, 5 Sup. Ct. 135, 28 L. Ed. 729. But in cases of this class it is essential to the maintenance of a claim of priority in behalf of the court whose jurisdiction is alleged to have been invoked that there should have been an actual or constructive seizure of the property, or that a receiver, with authority to take possession of it, should have been actually appointed, or that an application for his appointment should be pending at the time of the commission of the alleged wrong complained of, although he may not have been actually appointed or qualified, by giving a required bond, until afterwards. Shields v. Coleman, 157 U. S. 168, 15 Sup. Ct. 570, 39 L. Ed. 660. "Of course," says Mr. Justice Brewer, in the case last cited, "the question can fairly arise only in a case in which process has been served, and in which the express object of the bill, or, at least, one express object, is the appointment of a receiver, and where possession by such officer is necessary for full accomplishment of the other purposes named therein." And in Buck v. Colbath, supra, a leading case upon the subject, Mr. Justice Miller takes occasion to say: "It is only when the property is in the possession of the court, either actively or constructively, that the court is bound or professes to protect that possession from the process of other courts. Whenever the litigation is ended, or the possession of the officer or court is discharged, other courts are at liberty to deal with it according to the rights of the parties before them, when those rights require them to take possession of the property or not." And again: "It is not true that a court having gained jurisdiction of a subject-matter of a suit, and of parties before it, thereby excludes all other courts from the right to adjudicate upon other matters having a very close connection with those before the first court, and in some instances requiring the decision of the same questions exactly. In examining into the exclusive character of the jurisdiction of such cases, we must have regard to the nature of the remedies, the character of relief sought, and the identity of the parties in the different suits." In all the above-cited cases, and in all others of the same character, the only question involved is that of jurisdiction. The court first acquiring possession of the controversy and of the property deprives every other court of whatever jurisdiction in the premises it might otherwise have had.

The third class of cases is that to which the case at bar belongs, in which an action is pending to enforce a lien or to adjudicate a title, but in which the court has acquired, and is seeking to acquire, no possession of the property, actual or constructive, and in which no such possession is requisite to the determination of the controversy before it, and no attempt is made to withdraw that controversy to another tribunal. To such cases the principles of the doctrine of lis pendens, and not those above discussed, are applicable, and persons not parties to the suit may or may not be bound by the result of the litigation as circumstances and subsequent events shall disclose. A person who claims under or in subordination to one of the parties, with notice of the suit, and one who purchases from one of them, after suit brought, whether with notice or not, is bound by the judgment. But a person who claims by title paramount to that in litigation, or in hostility or adversely to the title of the lienor or mortgagor, cannot properly be made a party, and his rights cannot, without his consent, be adjudicated in the action. If, in the case at bar, the lease was, as between the parties, effectual as a mortgage, but the mortgagor had had no title to the property in controversy, the pendency of

Digitized by Google

the foreclosure suit could not have prevented the true owner from asserting his ownership and right of possession, either peaceably or by means of the writ of replevin. If the mortgaged property had been lands, the pendency of the foreclosure suit would not have barred the true owner's right of entry, or have prevented him from obtaining an adjudication of his title and possession of the premises by ejectment. One having a prior and superior lien would not have been estopped from resorting to another court for its enforcement by foreclosure and a sale of the premises. In either case, the first action in foreclosure would have proceeded to judgment, order of sale, and sale without obstruction or delay. The rights of the parties before the court would have been ascertained and determined by its judgment, and the purchaser would have been left to try conclusions, if he chose so to do, with the person who, by any of the means aforesaid, had come into possession of the property, because neither of these persons would, as against the other, have been bound by either of the former adjudications, to neither of which were both of them parties.

Now, if, in the case at bar, the alleged mortgage was void as to the creditors of Donley, the plaintiff in error Lehr, being a judgment and execution creditor, stood in an attitude similar to that of one claiming by title paramount, or of the true owner of the property in controversy, or of one having a superior lien. Otherwise, a suit to foreclose a simulated lien and an injunction, such as that granted at the beginning of this action, would be instruments both convenient and potent for hindering, delaying, and defrauding creditors. The injunction was within the jurisdiction of the court to grant, and during its existence not only was Donley prohibited from selling the property, but a purchaser from him would, in any event, have taken the property subject to the final adjudication in the case, and, if he purchased with actual and constructive notice of the order, he would have been punishable for contempt. But a purchaser at execution sale could have availed himself of the rights of the judgment creditor, and, if the alleged mortgage was void as to one, it would have been void as to the other also, and an adjudication in an action to which neither was a party could not have validated it. Neither the pendency of the foreclosure suit, nor the injunction, nor both, deprived Lehr of the right of pursuing his claim against Donley to judgment and execution, nor the latter of his statutory right to confess the judgment. That the lease, which had never been made of record, was, as against the lessee's creditors, void as respects the covenant to execute mortgages upon property not then in being, has been too frequently and too recently held by this court to require repetition.

It follows, from the foregoing, that, but for the stipulation, the prayer in the answer of the appellants Lehr and Martin to be dismissed out of the case, with their costs, should have been granted, and that the judgment should have assumed to determine the rights of the appellee and Donley, as between themselves, only. The stipulation, however, submitted the rights of all the parties for final adjudication in this action, an act which it was competent for the parties to do.

We therefore recommend that the judgment of the district court be reversed and vacated, and that a judgment be entered in this court that the appellant Lehr has a first lien upon the funds paid into the hands of the clerk of the district court, less the sum of $27 paid him as his compensation for selling the property in controversy, as provided by the stipulation in the record, for the amount of judgment pleaded in his answer, with interest and costs, and that the appellee, Ryan, has a second lien on said funds for the sum of $440 and interest from the 1st day of January, 1898, and that the said clerk of the district court be ordered to apply said funds first to the payment of said lien of the appellant Lehr, and the residue, if any, toward the payment of the said lien of the appellee, Ryan.

ALBERT and DUFFIE, CC., concur.

Judgment as per recommendation.

BROWN v. FORBES et al.

(Supreme Court of Nebraska. Nov. 20, 1901.)

USURY—PLEADING—COMPETENCY OF WITNESS—TRANSACTIONS WITH DECEDENT.

1. Answer examined, and *held* insufficient to constitute a plea of usury.
2. One claiming as heir is the representative of a deceased person, within the meaning of section 329, Code Civ. Proc.

Commissioners' Opinion. Department No. 3. Appeal from District Court, Douglas County; Scott, Judge.

"Not to be officially reported."

Action by Clementine Brown against George W. Forbes and others. Judgment for defendants, and plaintiff appeals. Reversed.

Thomas Creigh, for appellant. O'Neill & Gilbert and L. B. Copeland, for appellees.

ALBERT, C. This is an appeal from a decree entered in an action brought by the appellant to foreclose a mortgage, and to have the description of the mortgaged premises reformed. The reformation of the description of the premises was granted, but the court found that the mortgage debt was tainted with usury, and that after the application of the payments in accordance with said finding the mortgage debt had been paid, and entered a decree accordingly canceling and annulling the mortgage.

The appellant insists that the answer up-

Digitized by Google

on which the finding of usury is based does not state facts sufficient to constitute a plea of usury. So far as material at present, it is as follows: "Come now the defendants George W. Forbes and Juliette Z. Forbes, and for their amended answer to the petition of the plaintiff filed herein say that on the 30th day of September, 1887, the defendant George W. Forbes borrowed of Samuel R. Brown the sum of six thousand seven hundred fifty dollars ($6,750), and that as evidence therefor he indorsed and delivered to said Samuel R. Brown a certain promissory note, dated September 30, 1887, by the terms whereof one Meyer Hellman undertook and promised to pay to the order of said George W. Forbes the sum of seventy-five hundred dollars ($7,500) within two years from the date, with interest at the rate of six (6) per cent. per annum; the real fact being, however, that said note was originally executed by the said Meyer Hellman solely for the purpose of enabling said George W. Forbes to obtain said loan, said Meyer Hellman receiving no consideration therefor, and intending to act not as maker or payor, but only as surety for the payment thereof, all of which was then well and fully known to said Samuel R. Brown. These defendants further say that after the maturity of said note the same was extended by the said Samuel R. Brown with the requirement that the rate of interest thereon should be at ten (10) per centum per annum; that on the 16th day of December, 1890, the defendants George W. Forbes and Juliette Z. Forbes executed and delivered to said Samuel R. Brown their promissory note in the sum of $3,628.54, as alleged in plaintiff's petition, but these defendants state the fact to be that said note was given solely as a renewal of a balance at that time claimed to be due on said prior note of $7,500; and these defendants admit the execution and delivery of a certain mortgage to secure the payment of said note for $3,628.54, as alleged in plaintiff's petition. Further answering, these defendants say that said note for $7,500 was usurious, and that the taint of usury extended and attached to said note for $3,628.54; that the defendant George W. Forbes has paid on said notes in the aggregate the sum of $8,516.25; that said note in plaintiff's petition described and said note for $7,500 are fully paid; and that these defendants, or either of them, are in no wise indebted to the plaintiff on or by reason of said note or mortgage or otherwise."

In view of the many and recent decisions of this court on the question of what constitutes a sufficient plea of usury, it would serve no useful purpose at this time to attempt to construe the statute on that subject, or to attempt to formulate a rule of pleading applicable thereto. Leonard v. Cox, 10 Neb. 541, 7 N. W. 289; New England Co. v. Sandford, 16 Neb. 690, 21 N. W. 394; Anglo-American Co. v. Brohman, 33 Neb. 409, 50 N. W. 271; Rose v. Munford, 36 Neb. 152, 54 N. W. 129; Rainbolt v. Strang, 39 Neb. 339, 58 N. W. 96; Bell v. Stowe, 44 Neb. 210, 62 N. W. 456; McKinley-Lanning Co. v. Aldrich, 50 Neb. 786, 70 N. W. 399. The answer in Bell v. Stowe, supra, contains the following allegations: "That when these defendants made the contract with the First National Bank of Red Cloud, Nebraska, as shown in and evidenced by said note set out in the petition, said bank contracted for an unlawful rate of interest thereon, and contracted for and took usury thereon, to wit: These defendants were on said May 16, 1891, indebted to said bank in the sum of $578.63, and no more, and on said day, and without any further and other consideration whatever, they made and delivered to said bank, and at its request, the aforesaid note of $1,231.66, and that said note is the sole and only evidence of the indebtedness of these defendants to said bank, and that by said note the said bank took and contracted for usury to the amount of $653.03. That these defendants are indebted to said bank in the sum of $578.63, and no more, which said sum the defendants are ready and willing to pay." These allegations, in our opinion, present a stronger showing of usury than those contained in the answer under consideration, yet this court in that case held them insufficient to constitute a plea of usury. In the light of the cases cited, we are clearly of the opinion that there is no sufficient allegation of usury in the answer before us.

We have not overlooked the allegation "that after the maturity of said note the same was extended by the said Samuel R. Brown, with the requirement that the rate of interest thereon should be at 10 per cent. per annum." But this allegation falls short of charging a contract between the borrowers and the lender, whereby the former agreed to pay and the latter to receive a usurious rate of interest, nor is it charged in the answer that the terms on which the note was extended were ever assented to or complied with by the borrowers. It is but fair to the trial court to add that the sufficiency of the answer was not challenged until after the case had reached this court.

The appellees named, however, contend that the evidence fails to show that the appellant is the owner of the note secured by the mortgage sought to be foreclosed, and that for that reason she must fail in any event. The answer to this is that she pleads ownership by proper averments in her petition. These averments are not met by a denial, either general or specific, in the answer. The allegation in the answer that "these defendants, or either of them, are in no wise indebted to the plaintiff on or by reason of said note or mortgage or otherwise," is merely a conclusion from the preceding allegations of payment, and does not amount

Digitized by Google

to a denial of plaintiff's averments of ownership.

As we intend to recommend a new trial of this case, it is proper to notice another question raised in the argument. It stands admitted of record that the appellant is the owner and holder of the note as one of the heirs of the said Samuel R. Brown, deceased. The evidence on the question of usury was solely that of appellee George W. Forbes, one of the makers of the note in suit, and consisted largely of transactions between himself and the deceased. Objections were made to a portion, at least, of this testimony on the ground that the witness had a direct legal interest in the result of the suit, and the appellant was the representative of the said Samuel R. Brown. The objections were overruled. The appellant insists that the evidence should have been excluded, and we concur in that view. Section 329, Code Civ. Proc., so far as is material at this time, is as follows: "No person having a direct legal interest in the result of any civil action or proceeding when the adverse party is a representative of a deceased person, shall be permitted to testify to any transaction or conversation had between the deceased person and the witness, unless the evidence of the deceased person shall have been taken. * * *" The trial court appears to have proceeded upon the theory that the appellant was not the representative of the deceased. In this, we think, the court was in error. "A representative is one who exercises power derived from another. The evident intent of the statute was to exclude any person having a direct legal interest in the result of the cause, when the adverse party is an executor, administrator, or legal representative of a deceased person, so as to prevent the living from testifying against the representative of the dead. Death having closed the lips of the one, the law seals the lips of the other. It seems to be the settled rule of law that the word 'representative,' as used in the statute, was intended by the lawgivers to designate the person or party who succeeds to the rights of the deceased either by purchase, descent, or operation of law. And this rule seems to be well founded in reason and sense. The adoption of any other construction would leave the person or party succeeding to such rights at the mercy of parties claiming adversely to such rights." Wamsley v. Crook, 3 Neb. 344, citing Kimball v. Kimball, 16 Mich. 211; Hollister v. Young, 41 Vt. 160; Malady v. McEnary, 30 Ind. 278. The foregoing rule meets our approval, and is sufficiently comprehensive to include the appellant among those described as representatives of a deceased person, and it applies to this case.

As the case must be reversed on other grounds, it would serve no useful purpose to discuss the sufficiency of the evidence, admitted without objection and elicited on cross-examination, to sustain the plea of usury. We recommend that that portion of the decree complained of be reversed, and the cause remanded for further proceedings.

AMES and DUFFIE, CC., concur.

Reversed and remanded.

WOODARD v. CUTTER.

(Supreme Court of Nebraska. Nov. 20, 1901.)

ERROR—REVIEW—NEW TRIAL—DEPOSITIONS—OBJECTIONS.

1. This court will not, in an error proceeding, reverse a case, where the error alleged was neither presented to the court below in the motion for a new trial nor assigned as error in the petition filed in this court.

2. Objections to depositions, other than for incompetency or irrelevancy, must be presented to the court before the commencement of the trial.

Commissioners' Opinion. Department No. 3. Error to District Court, Dawes County; Westover, Judge.

"Not to be officially reported."

Action by Bloodgood H. Cutter against Nellie Woodard and others. Judgment for plaintiff, and defendant Woodard brings error. Affirmed.

Allen G. Fisher, for plaintiff in error. A. W. Crites, for defendant in error.

DUFFIE, C. This action was brought to foreclose a mortgage on lot 6, block 18, in the city of Chadron, Neb. The petition is in the usual form, and a decree is prayed for the foreclosure of the mortgage, and against the defendants who were personally liable upon the note for any deficiency. Upon the trial it was stipulated that the question of liability for a deficiency should be postponed as against all parties except the plaintiff in error. No written motion for a new trial was filed by the plaintiff in error, but the bill of exceptions contains a motion for a new trial, which was evidently dictated to the reporter, and counsel for plaintiff in error makes the claim in his brief that this was done under an agreement of the parties and by leave of court. Without now determining whether the provision of our Code of Civil Procedure requiring pleadings to be in writing may be waived by the parties, we will proceed to determine the case as though a motion for a new trial had been regularly filed. The motion contained five assignments of error, as follows: First. Errors in law occurring at the trial duly excepted to. Second. Error in the amount of the assessment of the decree. Third. The court erred in the admission of evidence over the defendant's timely objection. Fourth. The petition of the plaintiff fails to state a cause of action against the defendants. Fifth. The petition of the plaintiff, with the defendant's reply, failed to show the plaintiff entitled to any relief against the defendants.

¶ 2. See Depositions, vol. 16, Cent. Dig. §§ 309, 312.

Digitized by Google

It is now insisted that the decree is not supported by the evidence, in that there was no evidence offered to support the allegation of the petition "that no action at law has ever been brought in any court for the recovery of said promissory note and mortgage deed." Neither the petition in error filed in this court nor the motion for a new trial assigned as error the insufficiency of the evidence to support the decree, and we can consider no error of the district court not assigned as such in the petition in error.

It is further urged that the district court erred in admitting in evidence the deposition of Bloodgood H. Cutter. There is no doubt that the deposition should have been suppressed, if timely objections had been made thereto by written objections filed in the district court. The record before us fails to show that any written objections were made to the deposition, and our statute is plain that "no exception, other than for incompetency or irrelevancy, shall be regarded, unless made and filed before the commencement of the trial." Code Civ. Proc. § 390.

We discover no reversible error in the record, and therefore recommend that the decree of the district court be affirmed.

ALBERT and AMES, CC., concur.

Affirmed.

CONCORDIA LOAN & TRUST CO. v. DOUGLAS COUNTY.

(Supreme Court of Nebraska. Dec. 4, 1901.)

TAX SALE—CAVEAT EMPTOR—COUNTIES—LIABILITIES—MISTAKE OF CITY OFFICIALS.

1. The rule of caveat emptor applies to the purchase of real estate at a tax sale.

2. A county is not liable, under section 131, art. 1, c. 77, Comp. St. 1901, for a mistake of a city officer in certifying city assessments to the county treasurer.

3. Where an entire tract of land is sold at private tax sale for special city assessments, levied against only a portion thereof, and a tax receipt is issued in pursuance of such sale, in which the entire tract is described, such sale cannot be said to have been made "in consequence of error in describing such land in such receipt," within the meaning of said section.

Commissioners' Opinion. Department No. 3. Error to District Court, Douglas County; Dickinson, Judge.

"Not to be officially reported."

Action by the Concordia Loan & Trust Company against Douglas county. Judgment for defendant, and plaintiff brings error. Affirmed.

Henry W. Pennock, for plaintiff in error. George W. Shields, for defendant in error.

ALBERT, C. On the 7th day of January, 1892, E. B. Baer, at private tax sale, bought certain real estate in Douglas county. The tax for which the sale was made was a grading assessment of the city of Omaha, levied on only a portion of the land so bought. The sale of the whole tract for the tax levied on only a portion of it was not due to any mistake of the county treasurer, but the city officer who certified the city taxes to him. Afterward the purchaser paid subsequent taxes on the property, including city and county taxes, and, on December 14th following assigned his tax certificate, and his rights thereunder, to the Concordia Loan & Trust Company, the plaintiff in this case. The plaintiff thereafter paid subsequent taxes on the land, including both regular and special assessments. Afterward, in an action brought in the district court of Douglas county, it was duly adjudged that such tax certificate was a lien pro rata on that portion of the land against which the assessment was levied, and not a lien on the remainder. The plaintiff then filed its claim before the county board of Douglas county for all that part of the taxes paid by reason of the mistake in selling the entire tract when only a portion thereof was subject to sale. The board rejected the claim. On appeal the district court found against the plaintiff as to all city taxes, but in their favor for other taxes paid subsequent to the sale, and rendered judgment accordingly. The plaintiff brings the case here on appeal.

The plaintiff contends that it was entitled to a judgment for the taxes levied by the city, in addition to what was awarded them by the court. Aside from one question, which we shall notice presently, we think this contention is fully disposed of in Martin v. Kearney Co. (Neb.) 87 N. W. 351, decided by this court September 18, 1901, in which it is held that the rule of caveat emptor applies to the purchaser of real estate at tax sale. In the body of the opinion, Holcomb, J., says: "The levy was certified to the proper county officers, and in the performance of a ministerial duty imposed on them the taxes levied were entered on the tax record against all the property lying in the corporate limits of the city making the levy. The taxes were collected and turned over to the city authorities entitled thereto. There was no mistake or wrongful act on the part of the county treasurer or other county officers. * * * The county acted only for the purpose of collecting the levy made by the city, and turning over the funds to the municipality. Further than this it and its officers had no interest in the matter, and no greater responsibility should or was by the Legislature intended to attach to them than necessary to a proper discharge of their duty incident to such collection. The taxes held illegal were not levied by or for the benefit of the county, and we observe no sound reason for holding the county to any further or greater responsibility." As we have seen, the mistake in this case was not that of any county officer, but of one of the officers of the city; hence the foregoing is clearly applicable, and fully accords with our views.

But the plaintiff insists that the entire

tract was sold in consequence of an error in describing the land in the tax receipt issued to the purchaser in pursuance of his purchase at the tax sale, and for that reason his case falls within the provisions of section 131 of the revenue act (Comp. St. 1901, c. 77, art. 1), which provides, among other things, as follows: "Whenever land is sold in consequence of error in describing such land in the tax receipt, the county is to hold the purchaser harmless. * * *" We are not required to construe that portion of the section quoted, because, in our opinion, it has no application to this case. Section 113 of the same act provides: "After a tax sale shall have closed, * * * if any real estate remain unsold for want of bidders therefor, the county treasurer is authorized and required to sell the same at private sale at his office, to any one who will pay the amount of taxes, penalty and costs thereon for the same, and make out duplicate receipts for the taxes on such real estate, and deliver one to the purchaser and the other to the county clerk. * * *" The sale and the payment of the purchase price preceded the receipt. Whatever else may be in doubt, this much is clear: consequences can never precede in point of time the course from which they flow. It follows that it cannot be successfully urged that the sale to the plaintiff was "in consequence of error in describing the land in the tax receipt" made in pursuance to such sale.

In our opinion, the judgment of the district court is right, and we recommend that it be affirmed.

AMES and DUFFIE, CC., concur.

Affirmed.

SPELTS & KLOSTERMAN v. WARD.

(Supreme Court of Nebraska. Dec. 18, 1901.)

BREACH OF CONTRACT—EXECUTION OF CONTRACT — BURDEN OF PROOF — FRAUD — INSTRUCTIONS—EVIDENCE.

1. Where one is dealing with an unlettered man, who can neither read nor write, and makes his mark to the instrument he executes, and there is testimony tending to show that he did not understand the contents of such paper, or that his signature was obtained by fraud, it is incumbent on the former to show by a preponderance of the evidence that the latter fully understood the object and import of the writing which he executed.

2. In an action upon a contract, where the defense is that fraud was employed in securing the signature of one of the parties, the doctrine that the carelessness or negligence of the party in the signing of the contract estops him from disputing its contents is not applicable.

3. Instructions set out in the opinion examined, and *held* properly given.

4. Evidence examined, and found to sustain verdict and judgment.

Commissioners' Opinion. Department No. 1. Error to District Court, Seward County; Sedgwick, Judge.

"Not to be officially reported."

Action by Spelts & Klosterman against Mike Ward. Judgment for defendant, and plaintiffs bring error. Affirmed.

S. H. Steele and Hastings & Hall, for plaintiffs in error. R. S. Norval and George W. Lowley, for defendant in error.

KIRKPATRICK, C. Plaintiffs in error brought this action against defendant in error in the district court of Seward county to recover $500 damages for breach of contract made July 1, 1890. Plaintiffs pleaded the execution of a contract, by the terms of which defendant agreed to sell them 3,000 bushels of corn, to be delivered in July or August, at the option of plaintiffs, at an agreed price of 23½ cents per bushel; alleged that the sum of $50 had been paid upon the contract, and that defendant had delivered 250 bushels, refusing upon demand to deliver any more; that, by reason of said failure and refusal, they had suffered damage in the sum of $500, for which, with interest and costs, they prayed judgment. The answer denied the agreement as pleaded in the petition, but admitted the signing by mark of the written instrument set out; alleged that defendant could neither read nor write, and that the paper pleaded in the petition and signed by defendant did not represent the contract actually entered into, but that he had agreed to deliver to plaintiffs sufficient corn, at the price agreed upon, to cover the amount of money advanced, and that, if he had a good crop of corn, he would sell to them all he could spare at the price named; that the corn which he had delivered amounted in value to $9.77 more than the sum advanced, for which, with interest, he prayed judgment. The trial resulted in a verdict and judgment for defendant in the sum of $9.77, with interest thereon, amounting to $14.70. Plaintiffs in error ask for a review of this judgment by this court.

But two of the assignments in the petition in error are argued in brief of counsel, and the remainder will be deemed waived: (1) That there is not sufficient evidence to support the verdict; and (2) that the court erred in giving instruction No. 7 on its own motion. This case has been once before in this court on an appeal from a former trial. Ward v. Spelts, 39 Neb. 809, 58 N. W. 426.

The principal evidence in the case is that of Ward, defendant in error, and R. J. Reed, agent of plaintiffs in error, who prepared the contract. Ward testifies that he inquired of Reed, at the Ulysses office of plaintiffs in error, what he was paying for corn. Reed told him 23½ cents, and asked if Ward had any to sell. Ward replied that he had a little, and that he needed some money for himself and for the boys who were working for him. He was not satisfied with the price, and thought he would try to get what money he needed at the bank. Reed thereupon told him that corn would go down, and that he

Digitized by Google

had better sell what corn he had. Ward needed $50, and offered to dispose of enough corn to Reed to amount to at least that sum at 23½ cents, and that, if he had a good crop, he would sell to him all he could spare at that price. He thought he had between two and three thousand bushels, but would not want to sell any unless he had a good crop. Reed finally offered him a bonus of $2.50 out of his own pocket, explaining that, if he got Ward's corn, he would get other corn in the same neighborhood. Ward further testified that the corn was to be delivered in August or September, when Reed wanted it. He said the contract was not read over to him. "He [Reed] told me there was something—only a piece of paper wrote up that I was giving; that he was going to let me have $50 upon my own name there, and, any time I got ready to sell the corn, if I raised a good crop, that I would haul him all the corn I had to sell at the same price." He swears that he made his mark simply by touching his hand to the end of the penholder held by Reed, who represented that the instrument he was executing was an agreement to be charged with $52.50, and to deliver sufficient corn to balance the account, and as much additional as he could spare, if he had a good crop. Ward claimed further that he never agreed to sell 3,000 bushels. Reed testifies that he read the contract to ward as written, and his father, George Reed, who was present, corroborates this testimony.

The record discloses that Ward was an ignorant, unlettered man, able neither to read nor write, and that he was partially deaf. The rule is well settled that if a person is deceived as to the contents of a written instrument, and is induced by fraudulent representations to affix his signature to a contract under the belief that it correctly sets out the agreement to which he has orally assented, parol evidence is admissible to show what the contract actually was. It was the duty of Reed, acting for plaintiffs in error, to reduce to writing the contract actually made, and the burden was upon plaintiffs in error to show by a preponderance of the evidence that Ward understood the nature of the writing signed by him. In the case of Selden v. Myers, 15 L. Ed. 976, Chief Justice Taney says: "Where one is dealing with an unlettered man, who can neither read nor write, and makes his mark to the instrument he executes, it is incumbent on the former to show, past doubt, that the latter fully understood the object and import of the writing which he executed." While this court is not prepared to go as far as the learned chief justice in the opinion quoted, yet it is well settled that where one deals with an unlettered man, who can neither read nor write, and who makes his mark to the instrument he executes, and there is testimony to show that he did not understand the contents of the paper he has executed, or that his signature was obtained by fraud, it is incumbent on the former to show by a preponderance of the evidence that the latter fully understood the object and import of the writing which he executed.

It is contended that Ward is bound by the contract which he signed, because it was read over to him, as shown by Reed's testimony, and that, if he carelessly and negligently affixed his signature, he cannot now be heard to question it. The rule is not applicable to the case at bar. In the opinion of this court filed in the former appeal of this case, it is said: "The doctrine that the carelessness or negligence of a party in signing a writing estops him from afterwards disputing the contents of such writing is not applicable in a suit thereon between the original parties thereto, or where the defense thereto is that such writing, by reason of fraud, does not embrace the contract actually made." Ward v. Spelts, 39 Neb. 809, 58 N. W. 426. See, also, State Ins. Co. v. Jordan, 29 Neb. 514, 45 N. W. 792. From an examination of the entire record, we are satisfied that the jury were amply justified in finding that the contract actually entered into was as shown by the testimony of Ward. In Sonnenschein v. Bartels, 37 Neb. 592, 56 N. W. 210, the rule is correctly announced in the following language: "When a jury has decided a question of fact properly submitted, and the trial judge has overruled a motion for a new trial, then, if the record discloses competent evidence on which the finding may have been based, such finding cannot be disturbed by the Supreme Court." Davis v. Hilbourn, 41 Neb. 35, 59 N. W. 379.

Instruction No. 7 given on the court's own motion is as follows: "If you find from the evidence that the defendant, at the time of executing the paper in evidence, was unable to read or write written or printed matter, and that '3,000 bushels' was placed in writing without the knowledge of the defendant, and that he was induced to sign said contract, believing said contract embraced the agreement made between the plaintiffs and the defendant; and if you further find that the plaintiffs at the time paid to the defendant the sum of $52.50, and that the agreement between the parties was that the defendant should deliver to the plaintiffs sufficient corn to repay said money at the price named, and that the defendant should, if he had any other corn to spare, sell the same to the plaintiffs at the same price, said corn to be delivered in the month of August, 1890, after the defendant could tell whether or not he would raise a good crop of corn for that year, and after he should ascertain whether or not he would have any more corn to sell and spare from his then old crop, or any other specific quantity or amount of corn over and above sufficient to pay the $52.50 advanced by the plaintiffs to the defendant; and if you further find that the paper signed by the defendant was not read to the defendant as the same actually was when signed by him, but

Digitized by Google

was represented to the defendant as not containing the clause requiring him to deliver 3,000 bushels of corn to the plaintiffs, and that the defendant, believing such representation, executed the same, then you should find for the defendant." Counsel contend that this instruction is erroneous, in that it submits an issue whether the contract in suit was correctly read to defendant, whereas the only issue made by the proof is whether the contract was read at all or not. It is true that J. W. R. and George Reed claim that the contract was correctly read to Ward, while the latter contends that nothing was read to him at all, but that he was led to believe that he was signing a memorandum receipting for $52.50, and agreeing to deliver sufficient corn to balance the account thus made. An examination of this entire instruction, as well as the other instructions given, shows that the real issue submitted was what was the actual agreement between the parties. The issue of fraud was squarely raised by defendant's pleading and proof. The material inquiry was whether defendant was induced by misrepresentations to sign an agreement which did not embody his understanding of the contract. His illiteracy and physical infirmity made him the easy victim of fraud. His understanding, as shown by the evidence, was that the instrument he executed was a receipt for the money advanced, and an agreement to deliver sufficient corn to balance the account, and as much more as he could spare when he should know the condition of his crop. This theory of the case was fairly presented by the instruction complained of. "A party to an action is entitled to have the jury instructed with reference to his theory of the case, when the pleadings present the theory as an issue, and it is supported by competent evidence." Boice v. Palmer, 55 Neb. 389, 75 N. W. 849. That portion of the instruction of which counsel complain is as follows: "And if you further find that the paper signed by the defendant was not read to the defendant as the same actually was when signed by him, but was represented to the defendant as not containing the clause requiring him to deliver 3,000 bushels," etc. It is not probable that the jury were diverted by this clause in the instruction from the real inquiry, namely, whether the defendant believed and acted upon representations that the instrument which he was executing contained no agreement to deliver any specific number of bushels in addition to that necessary to repay the money advanced. The instruction submits the question, "Was the contract read as it was, or, was it represented as not containing an agreement to deliver 3,000 bushels?" This statement of the issue, when taken in connection with all the other instructions, was substantially correct, and plaintiffs in error were not prejudiced thereby. In Hoffine v. Ewings, 60 Neb. 729, 84 N. W. 93, it is said: "Instructions are to be considered together, to the end that they may be properly understood; and, when so construed, if, as a whole, they fairly state the law applicable to the evidence, error cannot be predicated upon the giving of the same."

The case seems to have been fairly submitted to the jury, and we are unable to say that their verdict is not right. It is therefore recommended that the judgment of the district court be affirmed.

DAY and HASTINGS, CC., concur.

Affirmed.

ISH et al. v. MARSH.

(Supreme Court of Nebraska. Nov. 20, 1901.)

WITNESS AS TO VALUE—COMPETENCY—INSTRUCTIONS.

1. When one of the questions in a lawsuit is the value of the use and occupation of real property in a city, one of the parties, who, immediately before the litigation arose, had for a considerable time occupied the premises for business purposes, and was seeking for damages for alleged unlawful dispossession of them, is a competent witness, after swearing that he knows such value, to testify what he considers it to be; his degree of competency, and the effect of his interest upon his credibility, being left to the jury to determine.

2. Error cannot be assigned in this court because of the giving or refusal of instructions, unless exception is taken at the time.

3. Instructions contained in the record examined, and found not to be erroneous.

Commissioners' Opinion. Department No. 3. Error to District Court, Douglas County; Powell, Judge.

"Not to be officially reported."

Action by L. A. Marsh against Martha M. Ish and another. Judgment for plaintiff, and defendants bring error. Affirmed.

W. A. Anderson, for plaintiffs in error. F. W. Fitch, for defendant in error.

AMES, C. The plaintiff below, Marsh, (defendant in error here), brought this action to recover damages alleged to have been wrongfully and wantonly inflicted upon his personal goods while they were upon the premises of the defendants to the action, Martha M. and James Ish. It is not denied that prior to the 5th day of June, 1897, the plaintiff had been lawfully in the possession of the premises, and occupying them with his goods, as the tenant of the defendants, or of one of them. The plaintiff alleges that possession was wrongfully invaded by the defendants, in consequence of which he suffered damages in addition to the injury inflicted upon his property. The answer of Martha M. Ish, who appears to have been the owner of the real property, amounts to a general denial, and, in addition thereto, an express repudiation of any responsibility for or knowledge of the alleged misconduct of her codefendant, who, she alleges, was her agent for the sole purpose of leasing her building and collecting rent therefor. The

Digitized by Google

answer of James Ish admits that the plaintiff had been a tenant in possession of the premises, but avers that on the 5th day of June he voluntarily delivered up the possession of said premises to the defendants, and alleges that on the 10th day of June the plaintiff and himself entered into a written agreement for the removal of the property by the former within five days thereafter, and admits the removal of the property by himself on the 16th day of the month, but denies that he did the same wrongfully or in a wrongful manner, and denies the other material allegations of the petition. The reply, besides pleading other matters not needed to be recited here, together with a general denial, inferentially admitted the making of the written agreement, but avers that the same was afterwards rescinded. The cause was tried to a jury, who returned a verdict for the plaintiff, upon which judgment was entered, and the defendants prosecute error in this court.

The evidence was conflicting upon every material issue raised by the pleadings, and will therefore not be reviewed at this time. The defendants objected, but did not except, to the giving by the court of certain three several instructions, of his own motion, to the jury. If this objection is to be treated as an exception, which, in strictness, it cannot be, it does not furnish sufficient ground for reversal. One of the instructions complained of told the jury, in substance, that if they found from the evidence that the tenancy in question was terminated on or about the 10th day of March, and the defendants used ordinary and reasonable care in removing the goods, they were not liable to damages for a resulting injury, if any, thereto, and that in such case their verdict should be for the defendants. The plaintiffs in error insist that this instruction and the other two in the group objected to are erroneous, because they contend that there is no evidence that the tenancy was terminated on the 10th day of March, and that the evidence is without conflict that it was terminated on the 5th day of the month. We cannot agree with them in this contention. It is undisputed that the plaintiffs in error took possession of the premises on the 5th, but the defendant in error testified that they did so without his consent and wrongfully, and were trespassers in so doing, and matters seemed to have remained in a state of greater or less belligerency until the removal of the goods, on the 16th; but there is evidence which, taken in connection with the admission in the reply, would have justified the jury in finding, and from which they perhaps did find, that the tenancy was terminated on the 10th by the written agreement mentioned in the answer, and by a settlement and payment of rent on that day. The jury, in any event, could not have been misled to the prejudice of the plaintiffs in error by an instruction, the gist of which was that if the tenancy had terminated before the 16th, the day of the removal of the goods, the defendants had a right to remove them, being responsible only for a want of due care. The instruction was doubtless intended to be favorable to the defense, and was as much so as the state of the record warranted.

The questions of negligence and of damages, if any, were for the jury. One of the items of damage claimed in the petition was that the defendants had unlawfully deprived the plaintiff of the possession of the premises from the time of their entry until the end of the year, to which it was alleged that the term of the tenancy extended. The plaintiff, having testified as a witness that he knew the value of the use and occupation of the premises for the time stated, was permitted, over objection and exception, to state what he considered it to be. This is complained of, but we do not think it was error. The fact that the witness had occupied the premises for business purposes sufficiently established his competency as to knowledge of the value of that which he had regarded as his own property, and his degree of competency, as well as the effect of his interest upon his credibility, was for the jury to determine.

The plaintiffs in error complain in their brief of the refusal of the court to give certain instructions asked for by the defense, but, as they omitted to except to such refusal, the complaint does not call for consideration by the court.

Upon the whole, therefore, we conclude that there is no reversible error disclosed by the record, and recommend that the judgment of the district court be affirmed.

ALBERT and DUFFIE, CC., concur.

Affirmed.

BROWN v. KEITH.

(Supreme Court of Nebraska. Sept. 18, 1901.)

REFERENCE—EQUITABLE COUNTERCLAIM.

1. When an equitable counterclaim is pleaded to a purely legal action, it is not error to overrule a general objection to a reference. Hotaling v. Tecumseh Nat. Bank, 75 N. W. 242, 55 Neb. 5.

Commissioners' Opinion. Department No. 2. Error to District Court, Lincoln County; Norris, Judge.

"Not to be officially reported"

Action by William Brown against John Keith. Judgment for defendant, and plaintiff brings error. Affirmed.

Neville & Parsons, for plaintiff in error. Wilcox & Halligan, for defendant in error.

SEDGWICK, C. This action was begun in the district court of Lincoln county. The petition contains several causes of action, and in one of them the plaintiff, William Brown, alleges that he "entered into an oral contract with the defendant, whereby

Digitized by Google

the defendant agreed to give him one-half of the profits to be realized on the cattle, hogs, and hay fed or produced upon the ranch belonging to the defendant near Sutherland, Nebraska, in consideration and as compensation for the personal services of plaintiff to be rendered and working upon and managing said ranch for defendant." He alleges that he worked for the defendant in pursuance of this contract for something over three years, and that the defendant refuses to pay the plaintiff "his share of the profits derived from the cattle, hogs, and hay." To this and the other counts of this petition the defendant answered, setting up an equitable defense, and the reply of the plaintiff thereto was a general denial. After the issues were so made up the court sustained a motion of the defendant to appoint a referee, and appointed one J. S. Hoagland to try the issues both of law and of fact, and ordered the referee to report his finding and decision to the court within time named in the order. The plaintiff excepted to the sustaining of the said motion of the defendant, and also to the order of the court appointing the referee, "for the reason that this is purely a legal action, and was referred without the consent and over the objection of this plaintiff." The plaintiff also took exceptions to the finding and report of the referee for the same reason. All of these objections were overruled by the court, and the findings and report of the referee approved, and judgment entered thereon. The plaintiff has brought the case to this court upon petition in error, and the sole question is presented whether the district court could, under these circumstances, refer the cause.

We think this case is determined by the case of Hotaling v. Tecumseh Nat. Bank, 55 Neb. 5, 75 N. W. 242. In that case this court, after referring to the rule that the issues of fact raised in an ordinary legal action to recover damages for breach of contract are triable to a jury, and that the case made by the petition was such an action, said: "But the answer presented an equitable counterclaim. * * * These allegations of the answer were traversed by the reply, and the issues of fact thus arising were triable to the court without a jury." And also, quoting from Peden v. Cavins, 134 Ind. 494, 34 N. E. 7, 39 Am. St. Rep. 276, said: "A demand for a jury should only include a demand for the trial of such issues as are triable by a jury, and, when several issues are joined in a cause, some triable by a jury and some by the court, and a demand for a jury to try all the issues is made, it is not error to refuse it." Jewett v. Black, 60 Neb. 173, 82 N. W. 375. We do not desire to be understood as expressing the opinion that the issue presented by the petition itself was triable only by a jury unless a jury trial was waived by the parties; but the doctrine that we wish to express is that in a purely legal action, when an equitable counterclaim is filed, and a general objection is made to referring the cause, it is not error to overrule the objection and refer the whole cause to a referee.

It is therefore recommended that the judgment of the district court be affirmed.

OLDHAM and POUND, CC., concur.

Affirmed.

SULLIVAN, J., absent, not voting.

ENGLISH v. SMITH et al.

(Supreme Court of Nebraska. Sept. 18, 1901.)

APPEAL — SUPERSEDEAS BOND — ACTION—DEFENSES—EXECUTION—EXAMINATION OF DEBTOR.

1. A. obtained judgment in the district court against B., a corporation, upon which execution issued, and was returned unsatisfied. Subsequently B. brought the case to this court on error, and filed a supersedeas bond in the district court, which was duly approved. Afterward, on A.'s motion, the district court made an order requiring additional sureties on the supersedeas bond, and providing that on failure of B. to comply with such order within 10 days the supersedeas bond should be stricken from the files, and execution issue on the judgment. The order was not complied with, and while the proceedings in error were still pending A. brought an action to enforce the judgment against the stockholders of B. to the extent of their unpaid stock subscriptions, which was still pending at the time of the trial of the present case. The judgment of the district court was afterward affirmed. In an action against the surety on the supersedeas bond, the foregoing facts *held* not to constitute a defense.

2. Whether the district court had jurisdiction to make said order pending proceedings in error in this court, quære?

3. To obtain an order for the examination of a judgment debtor under the provisions of section 533 of the Code of Civil Procedure, no affidavit is required. It is sufficient if it appear that an execution issued on the judgment has been returned unsatisfied.

Commissioners' Opinion. Department No. 3. Error to District Court, Douglas County; Keysor, Judge.

"Not to be officially reported."

Action by A. D. Smith and others against Arthur E. English. Judgment for plaintiffs, and defendant brings error. Affirmed.

Brome & Burnett, for plaintiff in error. John P. Breen, for defendants in error.

ALBERT, C. On the 25th day of May, 1893, the defendant in error recovered a judgment against the Blue Valley Lumber Company in the district court of Douglas county, from which the defendant company prosecutes error to this court. A supersedeas bond, with the plaintiff in error herein as one of the sureties, was filed and approved by the clerk of the district court. Afterward, on the 12th day of May, 1894, and while the proceedings in error were still pending, on motion of the defendant in error the district court made the following order in the case: "Now, on this 12th day of May,

Digitized by Google

1894, this motion filed herein for an order requiring defendant to give additional sureties on its stay bond, said motion is sustained, and it is ordered that the defendant give good and sufficient additional surety on its stay bond filed herein, and give a good and sufficient bond herein, within ten days from this date, and in case of failure so to do within the time above limited the stay bond now on file is stricken from the files, and the clerk of the court ordered to issue execution herein notwithstanding the bond now on file." It appears that an additional bond was subsequently found among the files, but when it was placed there is not clear from the evidence. It bears no filing mark save "Recorded June 29, 1896." It was never approved. From the evidence it is clear that it was filed either before the order for an additional bond was made or long after the time fixed by the court had expired. In our view of the case, it requires no further notice. The order of the court was not complied with, and after the expiration of the time fixed thereby, and while the proceedings in error were still pending in this court, an execution having been returned unsatisfied before the filing and approval of the supersedeas bond, the defendant in error commenced an action in the district court against the stockholders of the defendant company for the satisfaction of the judgment to the extent of their unpaid subscriptions, which was still pending when the present case was tried. The judgment of the defendant in error against the said company was affirmed by this court, and thereafter this action was brought against the plaintiff in error, on the bond first mentioned. A trial to the court resulted in a finding and judgment for the plaintiff, the defendant in error in this proceeding. Subsequently the district court made an order for the examination of the judgment debtor in proceedings in aid of execution. To reverse said judgment and subsequent order of the district court the case is brought here on error.

On the main case but one question arises, and that is whether the order of the court, set out in the statement, and the noncompliance therewith, and the subsequent acts of the judgment creditor, absolve the plaintiff in error from the liability on the supersedeas bond. It is urged on behalf of plaintiff in error that the district court had jurisdiction to make the order referred to, or at least the defendant in error is estopped to deny its validity; that the consideration for the bond was that the enforcement of the judgment should be stayed pending the proceedings in error in this court; and that by reason of that order, and the noncompliance therewith by his principal on the bond, there was a failure of consideration, and for that reason he is released from liability thereon. Whether the trial court had jurisdiction to make the order for an additional bond is an open question in this state, and one which we do not deem it necessary to decide in this case. If the court had jurisdiction to make the order, then the consideration, or, more properly, the purpose, of the bond, which does not appear on its face, but must be gathered from the law, was that the enforcement of the judgment should be stayed pending the proceedings in this court, or until the making of the order in question and the failure of the principal to comply therewith. In this view of the case, the bond served the purpose for which it was given, and there was no failure of consideration. If the court was without jurisdiction, then the order is a nullity, and the liability of the obligors remains unaffected thereby. Hence, whether we regard the order as valid or invalid, the plaintiff in error is liable.

It is suggested that the order may be invalid, and the defendant in error estopped to deny its validity, because the defendant in error acted upon it by bringing his action against the stockholders to enforce the judgment while the proceedings in error were still pending in this court. Whether such theory, if adopted, would effect the foregoing conclusion, we need not determine. The suit against the stockholders was pending when this case was tried, and, for aught that appears, is still pending. If it was prematurely brought, that fact is available by plea in abatement. By the bringing of such action, it does not appear that the defendant in error has gained any advantage, or that the obligors have been led to change their position to their detriment. Under such circumstances, there is no estoppel. Nash v. Baker, 40 Neb. 295, 8 N. W. 706.

There remains to be considered the objections to the supplemental order of the judge of the district court requiring the plaintiff in error to appear and answer touching his property. It appears from the record that, after the issuance and return unsatisfied of an execution on the judgment herein the defendant in error applied to the judge for the order in question. In support of his application he filed the execution with the sheriff's return thereon, and the affidavit of his attorney, alleging, among other things, that "I have reason to believe and do believe that the judgment defendant, the said Arthur E. English, has property which he unjustly refuses to apply towards the satisfaction of said judgment." Plaintiff in error contends that the affidavit, not being a positive averment of the fact, but merely a belief of its existence, is insufficient to warrant the order. In support of his contention he cites Clarke v. Neb. Nat. Bank, 57 Neb. 314, 77 N. W. 805, 73 Am. St. Rep. 507. In that case it was held by this court that the proceedings therefor were governed by the provisions of section 534 of the Code of Civil Procedure, which provides a remedy for proceedings in aid of an execution which has not been returned. But sec-

Digitized by Google

tion 533 is as follows: "When an execution against the property of a judgment debtor, or one of several debtors in the same judgment, is issued to the sheriff of a county where he resides, or, if he do not reside in this state, to the sheriff of the county where the judgment was rendered, or a transcript of a justice's judgment has been filed, is returned unsatisfied in whole or in part, the judgment creditor is entitled to an order from a probate judge or a judge of the district court of the county to which the execution was issued, requiring such debtor to appear and answer concerning his property, before said judge, or referee appointed by such judge, at a time and place specified in such order, within the county to which the execution was issued." It will be observed that the foregoing section requires no affidavit whatever, but merely a return unsatisfied, in whole or in part, of the execution. Such was the view of one of the earliest writers on the Code of Civil Procedure of Ohio, from which ours was taken, almost word for word. Nash's Pleading and Practice (3d Ed.) p. 612. Hence, in our opinion, after a showing that the execution issued on the judgment had been returned unsatisfied, the defendant in error was entitled to the order, and the filing of the affidavit was a work of supererogation. We find no error in the record.

We therefore recommend that the judgment of the district court, as well as the order citing the plaintiff in error to appear and answer touching his property, be affirmed.

AMES and DUFFIE, CC., concur.

Affirmed.

SULLIVAN, J., absent, not voting.

LEXINGTON MILL & ELEVATOR CO. v. DAWSON COUNTY.

(Supreme Court of Nebraska. Nov. 20, 1901.)

TAXATION—COMPLAINT TO BOARD OF EQUALIZATION—JURISDICTION—ORDER OF BOARD.

1. The complaint copied in the opinion *held* to be sufficient to give the board of county commissioners, sitting as a board of equalization, jurisdiction to make the order complained of.

2. A party cannot be heard to complain that an order made by a board of equalization raised the assessed value of his property too high, when he admits that the valuation so made by the board is less than one-seventh of the actual value of such property.

3. The rule that there must be a finding of fact set out to support the judgment of the court has no application to the orders made by the county board.

Commissioners' Opinion. Department No. 1. Error to District Court, Dawson County; Sullivan, Judge.

"Not to be officially reported."

Action by the Lexington Mill & Elevator Company against Dawson county. Judgment for defendant, and plaintiff brings error. Affirmed.

E. A. Cook, T. L. Warrington, and G. W. Fox, for plaintiff in error. Geo. C. Gillan and W. A. Stewart, for defendant in error.

KIRKPATRICK, C. The record in this case discloses that on July 1, 1897, the board of county commissioners of Dawson county, sitting as a board of equalization, raised the assessed valuation of the property of plaintiff in error from $2,813, as returned by the assessor, to $3,064. From this order plaintiff in error prosecuted error to the district court, where its petition was dismissed, and it brings the case here for review.

It is claimed by plaintiff in error: First, that the complaint filed, and upon which the board took action, was not sufficient to give the board jurisdiction to make the order complained of; second, that the testimony considered by the board was not sufficient to justify it in making the order; and, third, that no findings of fact were made by the board to support the order complained of.

The complaint upon which the board took action is as follows: "To the Hon. Board of County Commissioners of Dawson County, Nebraska—Gentlemen: We, the undersigned persons, do hereby complain and protest that our personal property in Cozad precinct, Dawson county, Nebr., has been, and now is, assessed too high, when compared with the personal property assessments of the following persons, which we complain and protest have been and now is assessed too low in Lexington precinct of said county and state, and respectfully ask that the same be by you equalized and made correct, namely: The Penny Mercantile Co., Wolback & Kutz, John L. May, The Dawson County National Bank, The First National Bank, The Lexington Bank, The Lexington Mill & Elevator Co., The Chicago Lumber Co., W. J. Fleming & Son, J. M. Neff, S. T. Woodsum, A. E. Cole, and Woodsum Bros."

A motion was made by plaintiff in error to dismiss the complaint for the following reasons: First. The complaint does not state facts sufficient to warrant an investigation as to the assessments of the objector. Second. The complaint is void for uncertainty as to the object sought by the person making the same. Third. The complaint is insufficient for the reason that the same does not charge that the assessment of this objector is too low as compared with all other personal property of the same class in Lexington precinct, as assessed therein. Fourth. The precinct of Cayote lies between Lexington and Cozad precincts, and a comparison of individual assessments in said precinct cannot be taken and made the basis of a complaint sufficient in law to warrant said board in reassessing the property of this objector. Fifth. The said complaint is insufficient for the reason that it does not charge the assessment of the persons making the same is higher than the assessment of all other personal property of the same class in the said Cozad precinct.

Digitized by Google

It will not be necessary to discuss these points in detail. That portion of section 70, c. 77, art. 1, Comp. St. 1901, under which the board took action, is as follows: "On application of any person considering himself aggrieved or who shall complain that the property of another is assessed too low, they shall review the assessment and correct the same as shall appear to be just. No complaint that another is assessed too low shall be acted upon until the person assessed, or his agent, shall be notified of such complaint, if a resident of the county." Under this statute, it seems only to be necessary that the person making the complaint should be a taxpayer of the county, who would be affected by the action of the board, and that there be a direct complaint that the property of the person against whom the complaint is made is assessed too low, or that the property of the person complaining was assessed too high. The complaint seems to meet each of these requirements, and is therefore sufficient.

The argument of plaintiff in error proceeds upon the theory that, because the persons making the complaint did not reside in the same precinct in which the property of plaintiff in error was situated, the complaint was not sufficient to authorize the board to act. This contention cannot be sustained. The county of Dawson is governed by the law providing for commissioners, and it is not necessary that the person making the complaint should reside in the same precinct where the property of the persons complained against is situated; the board has jurisdiction over the entire county, and is authorized to review and correct the assessments as shall appear to it to be just. The statute conferring jurisdiction is broad and comprehensive, and fully authorized the board to make the order complained of. It was not necessary, in order to give the board jurisdiction, that the complaint should allege that the property of plaintiff in error was assessed lower than other property in the same precinct. There is no doubt plaintiff in error would have been permitted to set up, by way of answer, that the property of other persons in the same precinct was assessed too low as compared with that of plaintiff in error, and so presented the question for consideration of the board. This plaintiff in error failed to do, and there arises no presumption in this case that the property of the other persons was assessed too low. There was no error in the action of the board in overruling the motion filed by plaintiff in error.

Plaintiff in error, then, for an answer, filed a general denial, and the matter to be tried was submitted to the board upon an agreed statement of facts. From this it appears admitted by plaintiff in error that the fair cash value of its property in Lexington precinct, where it was situated and assessed, was $24,000. It further appears that this property and other "mercantile" property in said precinct should be assessed at one-ninth of its fair cash value, that being the basis of the assessment in Dawson county for the year 1897. If the matters stated in the stipulation are true, it appears that the property of Dawson county was assessed at a grossly inadequate valuation. The statute required that this property should be assessed at its fair cash value. The county board only raised the assessment from $2,813 to $3,064. Plaintiff in error cannot be heard to complain of this order. The only wrong that appears in the action of the board is that it did not fix the valuation of the property of plaintiff in error at $24,000, its admitted fair cash value. Plaintiff in error, having failed to present to the county board the fact that the property of other persons in that precinct was assessed too low, cannot be heard to complain of the valuation of its own property, when it does not appear that injustice has been done, and that the valuation of the property of plaintiff in error, as fixed by the county board, is less than one-seventh of its real value.

It is urged that the action of the county board was erroneous because no formal findings of fact were made. This position is not well taken. The rule that there must be a finding of fact to sustain the judgment of a court has no application to orders made by a board of county commissioners.

It follows from what has been said that the trial court did not err in dismissing the petition of plaintiff in error. It is therefore recommended that the judgment of the lower court be affirmed.

DAY and HASTINGS, CC., concur.

Affirmed.

LANGAN et al. v. PARKHURST et al.

(Supreme Court of Nebraska. Nov. 7, 1901.)

EQUITY—NEW TRIAL—FAILURE TO APPEAL—REVIEW.

1. The practice of procuring new trials in the district court by petition in equity on the ground that a hearing in the court of last resort has been denied the applicant without his fault is not looked upon with favor as a substitute for review proceedings in this court, and such relief should only be granted when the applicant for it shows that he has first used the utmost diligence in seeking to have the cause reviewed in this court, and that he has been denied a review here without any semblance of fault on his part.

2. Ordinarily, when a party procures a judgment in the district court, he is entitled to the benefit of his judgment, or to the privilege of defending its regularity in this court; and his right in this matter should not be denied him except in an extraordinary case, in which the unsuccessful litigant has been denied his constitutional right to have his cause properly reviewed in this court without any fault of his own.

Commissioners' Opinion. Department No. 2. Appeal from District Court, Hall County: Thompson, Judge.

"Not to be officially reported."

Digitized by Google

Action by Thomas Langan and others against David S. Parkhurst and others. Judgment for defendants, and plaintiffs appeal. Affirmed.

O. A. Abbott, for appellants. W. H. Thompson, for appellees.

OLDHAM, C. This suit originated from an action at law on an account which was maintained by the appellees against the appellants in the district court of Hall county. The appellees recovered a verdict in their law action on the 27th day of November, 1895. A motion for a new trial was duly filed by the appellants, and on the 21st day of December, 1895, this motion was overruled, and judgment was rendered for appellees on their verdict, and appellants were given 40 days from the rising of the court to prepare and file a bill of exceptions. There was no final adjournment of the term of the court at which this judgment was rendered until the 2d day of March, 1896. On the 17th day of March, 1896, appellants' counsel ordered a bill of exceptions from the reporter of the court. No application was made by appellants' counsel to the court for additional time in which to complete his bill of exceptions, but on the 10th day of June he did inform the reporter that he still wanted his bill of exceptions, but that he wanted him to make a bill in another case first. The matter then dragged along until 80 days had expired, and appellants' counsel says his attention had been called to the decision of this court in the case of Horbach v. Omaha, 49 Neb. 851, 69 N. W. 121, after which he told the reporter not to complete the bill of exceptions. No transcript nor petition in error was filed in the Supreme Court. On the 10th day of February, 1897, appellants filed their bill in equity asking for a new trial in the cause above set out, and alleging that they were prevented from reviewing this case in the Supreme Court without any fault on their part, because of the inability of the reporter to furnish them a bill of exceptions within 80 days of the rising of the court, and that they were unable to have their cause properly reviewed without a bill of exceptions. Appellees answered this bill, denying that appellants had in good faith attempted to secure a review of this case in the Supreme Court, and charging them with negligence in their efforts to secure a bill of exceptions, and attached to their answer an offer to waive the time of the preparing of the bill of exceptions and enter their appearance to a petition in error in the Supreme Court. On a hearing had below after a refusal of the appellants to accept the waiver of the appellees to the time of preparing the bill of exceptions and the filing of the petition in error in the Supreme Court, the court dismissed the petition of the appellants, and thereupon this appeal was instituted.

Appellants' contention is that they have been denied their right of a review in the Supreme Court of the law action without any fault on their part, and that when the reporter failed to complete their bill of exceptions within the 80 days from the time of the final adjournment of the court at which the judgment was rendered against them they were absolutely barred by the decision of this court in Horbach v. Omaha, supra, from ever having their bill of exceptions considered by the Supreme Court, and consequently this case should be governed by the rule announced in Curran v. Wilcox, 10 Neb. 449, 6 N. W. 762, and Holland v. C., B. & Q. R. Co. (Neb.) 71 N. W. 989. In Curran v. Wilcox, supra, a new trial was granted because the reporter was incompetent, and could not make an intelligible bill of exceptions; the court holding that the litigants had a right to rely on the reporter for their bill of exceptions, and that it was not negligence for counsel to do so. At the time of the decision in that case the time for preparing the bill of exceptions was limited to 40 days, and the petition showed that the defendants had refused to consent to an extension of time. In the case of Holland v. C., B. & Q. R. Co., supra, the petition for a new trial was granted because the reporter had lost a part of his notes, and there was no way in which a correct bill of exceptions could be completed. In each of these cases no negligence in ordering a bill of exceptions could be imputed to those asking this relief, and the failure to procure the bill was due solely to the default of the officers of the court. In neither of these cases was the question involved of diligence on the part of those asking relief in getting the bill prepared within the statutory time, but each of them presented a state of facts in which it was practically impossible to ever procure a bill: but not so in the case at bar. In this case the reporter testified that he had his bill almost completed when appellant's counsel revoked his order for the bill. He also testified that he still had his notes, and could still complete the bill, and that the only reason that he had not completed it was for want of time. It also appeared from the testimony that the bill of exceptions that appellant's counsel had directed him to make first was completed within 80 days of the rising of the court. Now, then, it clearly appears that the only obstacle which prevented the appellants from procuring their bill of exceptions was a want of sufficient time for the reporter to complete it, and it seems reasonably certain, from an examination of the evidence, that, if appellants had ordered this bill of exceptions on the 21st day of December, 1895, when they were entitled to do so, instead of waiting until the 17th day of March, 1896, they would have been able to have procured the bill within the time prescribed by the statute. Again, we think, that appellants were negligent in not presenting an application to the court for an extension of time after the first 40 days had expired. We be-

Digitized by Google

lieve that appellants' counsel construes the rule announced in Horbach v. Omaha, supra, too rigidly. While it is true that the doctrine is announced in that case that 80 days from the rising of the court is the limit of time that can be allowed for preparing and settling a bill of exceptions, yet we do not understand that that case lays it down as an inflexible rule that this court will not, under any circumstances, consider a bill of exceptions that has been prepared and settled more than 80 calender days from the final adjournment of the term of court; for the learned commissioner who wrote that opinion says: "No opinion is here expressed as to whether or not time occupied by legal proceedings having for their object the enforcement of duties of the parties, of the judge, or of court officers should be computed in ascertaining whether the period has elapsed." We are strongly impressed with the conviction that the record in this case does not show such a degree of diligence on the part of the appellants in their efforts to have the case at law reviewed in this court as to entitle them to the relief for which they pray.

We do not believe that it should be the policy of this court to make proceedings of this kind an easy and certain means by which defeated parties can procure a new trial in the district court. We believe that a successful litigant in the court below is ordinarily entitled to the benefit of his judgment, or to the privilege of defending its regularity in this court; and that his right in this matter should not be denied him, except in an extraordinary case, in which the unsuccessful litigant has been denied his constitutional right of review of his cause in the Supreme Court without any fault of his own.

It is therefore recommended that the judgment of the district court be affirmed.

POUND, C. I concur in recommending that the judgment be affirmed.

SEDGWICK, C. I concur in recommending the affirmance of the decree of the district court in this case, because I think, upon the facts shown, the plaintiffs' attorney did not use due diligence to procure a transcript of the evidence. When he applied to the reporter for a transcript, there still remained 25 days in which to prepare and serve his bill of exceptions. Nearly three months had then expired since the overruling of his motion for a new trial. If it can be said that he was not negligent in so long deferring his request for a transcript, certainly he did not use due diligence afterwards. He made no further inquiry in regard to preparing the transcript until the 10th day of June, when he informed the reporter that he still wanted the transcript, although at that time not only the 40 days first allowed had expired, but also the full time for which the court might allow an extension under the decision in Horbach v. Omaha, 49 Neb. 851, 69 N. W. 121. That was a well-considered case, and seems to express the natural and necessary construction of the statute. Under the rule announced in that case, the transcript could have been of no possible use to plaintiff on or after the 10th day of June, as the time had elapsed in which the proposed bill of exceptions might be served on the opposite party. And it seems clear that after waiting nearly three months without requesting the transcript, and then apparently allowing the reporter to understand he might take his own time in preparing it, the plaintiff's neglect thereafter to ask for an extension of time, or to notify the reporter that the transcript was needed at any particular time, is inconsistent with such diligence as the law requires of the plaintiff under the circumstances. It will not do to say that plaintiff was misled by the opinion of this court in Richards v. State, 22 Neb. 145, 34 N. W. 346, because, even under the rule announced in that case, the supposed presumption of diligence on the part of plaintiff is overcome by the evidence contained in this record; and, further, the rule there stated is not the law, as is clearly shown by the opinion in the case of Horbach v. Omaha, supra.

Affirmed.

LEE et al. v. CARROLL NORMAL SCHOOL CO.

(Supreme Court of Nebraska. Oct. 1, 1901.)

CONTRACT—BREACH—LIQUIDATED DAMAGES—PENALTY.

1. When parties to a contract stipulate that in case of a violation thereof the party making default shall pay to the other a stipulated sum as liquidated damages, the courts will take the sum so fixed as the innocent party's measure of damages only when it appears that to do so will no more than compensate his loss.

2. If the measure of damages so fixed in the contract to be paid for its breach will more than compensate the innocent party, the court will regard such sum as a penalty. Gillilan v. Rollins, 59 N. W. 893, 41 Neb. 540, followed.

3. Evidence examined, and *held* in part not to support the judgment.

Commissioners' Opinion. Department No. 1. Error to District Court, Saunders County; Bates, Judge.

"Not to be officially reported."

Action by the Carroll Normal School Company against J. M. Lee and others. Judgment for plaintiff, and defendants bring error. Affirmed on conditions.

Simpson & Sornborgor, for plaintiffs in error. Good & Good and J. H. Macomber, for defendant in error.

DAY, C. The Carroll Normal School Company, by and through certain persons designated as a "building committee," entered into a contract with Patterson and McClean, by the terms of which the latter agreed to furnish the materials and erect for the plaintiffs

¶ 2. See Damages, vol. 15, Cent. Dig. § 170.

Digitized by Google

a school building, according to certain plans and specifications, for the consideration of $8,992, to be paid in installments as the work reached certain stages of completion. For the faithful performance of the contract Patterson and McClean, as principals, and J. M. Lee and Charles P. Beebe, as sureties, executed and delivered to the building committee a bond in the sum of $5,000, which, for the purposes of this case, is to be regarded as though executed and delivered to the plaintiffs. This action was brought by the Carroll Normal School Company in the district court of Saunders county against J. M. Lee and Charles Beebe to recover damages alleged to have been sustained for a breach of the contract. A trial was had to the court without a jury, resulting in certain special findings favorable to the plaintiff, upon which judgment was rendered for $560.60, to review which the defendants bring error to this court.

The contract provided that the work should be wholly finished according to the plans and specifications on or before October 1, 1891, and in default thereof Patterson and McClean should pay to the owner, as liquidated damages, the sum of $25 for every day thereafter that the work should remain unfinished. The petition alleged a great many particulars in which it was claimed there was a breach of the contract; among them a claim that the building was not completed within the time limited by the contract, and by reason thereof damages in the sum of $2,000 were prayed. The court found that the building was not completed till December 21, 1891; that the failure to complete it by October 1st was a breach of the contract; that, as a matter of law, the sum of $25 per day as liquidated damages is unreasonable; that the measure of plaintiff's damage for the breach in this particular is the rental value of the building. The court also found the value of the building to be the amount of the contract price, $8,992, and that 7 per cent. of that sum would be a fair rental, and with these findings as a basis for the purposes of the case fixed the rental value of the building at $50 per month for the period of 2 months and 20 days, and allowed the plaintiff upon this item of its claim $133.30, and allowed interest upon this sum making the total $161.30. This finding of the court is one of the errors now complained of.

There was no proof offered as to the value of the use of the building or its rental value, the plaintiff evidently relying on the amount named in the contract as liquidated damages as the measure of its damages. There was some proof, which was very unsatisfactory, which tended to show that a contract had been made by the plaintiff with Prof. Crider to operate the school; but whether the plaintiff allowed him the use of the building gratis, or whether he was to pay rent for it, the record is entirely silent. It was shown that by reason of the failure of the plaintiff to give possession of the building to Crider at the time it had contracted to do so the plaintiff paid him $325. There is nothing in the record to show that the payment to Crider rested upon any legal obligation, and, if it did, the payment to him would not be the proper basis to determine the plaintiff's damages. It is very apparent that the court did not consider it in arriving at the amount to be allowed for the failure to complete the building. In determining whether the sum named in the contract is to be considered as a penalty or as liquidated damages, the courts are aided by circumstances extraneous of the writing. The subject-matter of the contract, the consideration on which it is based, the intention of the parties, the amount named as damages, the length of time of the default, and other facts and circumstances may be considered. The rule supported by the weight of the authority is, when parties to a contract stipulate that in case of a violation thereof the party making default shall pay a stipulated sum, the courts will take the sum so fixed as the injured party's measure of damages only when it appears that to do so will no more than compensate his loss, but, if the sum so fixed in such contract will more than compensate the innocent party, the court will regard the same as a penalty. Gillilan v. Rollins, 41 Neb. 540, 59 N. W. 893. The law imposes no penalty, as such, but simply requires the defaulting party to make good such pecuniary loss as his neglect has produced; and this loss is to be determined by established principles, and such as the complaining party can show he has suffered within legal rules.

Applying this rule to the case under consideration, it seems clear that the stipulated sum of $25 per day for a period of 80 days, in view of all the facts, would be unreasonable, and we think, therefore, the court was right in holding the amount named in the contract as a penalty, and not as liquidated damages. But was the court justified in finding that the rental value of the property was $50 per month, based alone upon the fact of the contract price of the building being in evidence? The judgment of the court upon this question is evidently based upon the theory that legal interest upon the value of the building, in the absence of proof, would afford a correct basis for determining the value of its use. As applied to the case in hand, the rule adopted may not be far from right, and yet it does not afford a safe rule, and is not correct as a principle of law. The law does not determine by inference that the use of property is worth any specific sum, except, perhaps in the case of money, and the only safe rule is to require a person who claims to have been damaged by a breach of a contract to prove the amount of his damage. The damage in a case like this is the loss of the possession of the building as a thing of use. It may be more or less than legal interest upon its costs, depending upon

Digitized by Google

circumstances. In the absence of proof of the amount of damage, the law will infer nominal damage only. We know of no rule of law, which, when there is no proof, will infer any amount of damage which is more than nominal, except where it is money which is detained. We think the contention of plaintiff in error well taken that as to the finding of the court allowing damage in the sum of $161.30 there is no evidence to support it, and to this extent the judgment of the district court was wrong.

The defendants also complain of the findings of the court allowing damage in the sum of $30.25 for failure to use dimension shingles in the construction in the roof gables. The objection is urged that there is no testimony to support the finding. The testimony shows that an inferior shingle was used from that called for in the contract, but no witness attempted to fix or approximate the damage to the building by this breach of the contract. So far as the evidence shows on this item, the plaintiff failed to show damage in any amount, and the findings of the court thereon are unsupported by the evidence.

Error is also predicated upon the court's tenth finding, wherein it found that plaintiff had paid to Patterson and McClean the full consideration of $8,992 for the erection of said building, and that by reason of a lien which had been filed upon the building the plaintiff had paid $305 in addition to the contract price. The contract provided: "That if, at any time, there shall be any lien, or for which, if established, the owners of said premises might be made liable, and which would be chargeable to said contractors, the owners shall have the right to retain out of any payment then due or thereafter to become due an amount to completely indemnify them against such lien or claim until the same shall be effectually satisfied, discharged, or canceled, and, should there prove to be any such claim after all payments are made, the contractors shall refund to the owners the money that the latter may be compelled to pay in discharging any lien upon said premises made obligatory in consequence of the former's default." It is urged by plaintiff in error that the bond required only that the building be completed according to the contract and plans and specifications, but that this would not require a payment of any lien which might be created upon the building. This contention is not sound. A fair construction of the contract requires the contractors to furnish the material, perform the labor, and erect the building; and this implies a payment for the materials which enter into the construction of the building. The bond was for the faithful performance of the contract. The testimony establishes this finding of the court. The finding of the court allowing $161 as a fair rental of the property during the period of 80 days and the allowance of $30.25 is not supported by sufficient evidence, and as to these items the judgment of the district court is wrong. If the plaintiff elects to file a remittitur within 20 days of $191.55, with interest thereon from the date of the rendition of the judgment, the judgment will be affirmed; otherwise reversed and remanded.

HASTINGS and KIRKPATRICK, CC., concur.

Remittitur.

SULLIVAN, J., absent, not voting.

HOLDREGE v. WATSON.

(Supreme Court of Nebraska. Oct. 1, 1901.)

TRIAL—SUBMISSION OF ISSUES—CONTRACT—RESCISSION—FRAUD—INSTRUCTIONS—CREDIBILITY OF WITNESS.

1. There being no evidence supporting the allegations of a fraudulent alteration of a contract after its execution and delivery, it is error to submit that question to the jury.

2. One who has a right of rescission of a contract, for fraud in procuring it, should make known his rescission as soon as may be after he knows his right to rescind.

3. It is error to instruct the jury, that, if "any of the witnesses have purposely or knowingly testified falsely in any particular, the jury would be justified in disregarding such witnesses' entire testimony, unless it shall further appear that such witness has been corroborated by other sufficient and competent testimony." Unless the witness has testified falsely in regard to some material issue or matters in regard to which the witness cannot be presumed liable to mistake, the maxim, "Falsus in uno, falsus in omnibus," does not apply.

Commissioners' Opinion. Department No. 2. Error to District Court, Saline County; Hastings, Judge.

"Not to be officially reported."

Action by George W. Holdrege, trustee, against E. G. Watson. Judgment for defendant, and plaintiff brings error. Reversed.

F. I. Foss, J. W. Deweese, and F. E. Bishop, for plaintiff in error. J. D. Pope, for defendant in error.

SEDGWICK, C. This action was begun by this plaintiff in error in the district court of Saline county to recover money alleged to be due on a contract for the sale of land. The trial resulted in a verdict and judgment for the defendant on his counterclaim, and the plaintiff has brought the case to this court upon petition in error. The answer is somewhat lengthy, but in effect it admits that the contract was made as alleged by the plaintiff, except as to the number of the section containing the land described therein, and the words, "Subject to the right of way of the N. & C. Railroad," and alleges that the plaintiff procured the contract by fraud, and fraudulently altered it. The reply is a general denial.

The first question presented is as to the sufficiency of the evidence to support the allegations of fraud. As there must be a new

Digitized by Google

trial for reasons hereinafter stated, we will not discuss the evidence upon this question.

The defendant below insisted that there had been a fraudulent alteration of the contract after its delivery. The allegations of the answer in that regard are: "That after making, signing, and delivering to the said plaintiff said contract, and a payment hereon in the sum of $96, that said contract was materially changed and altered, in this, to wit, the number of the section in the description was changed, and there was added to the description as set forth in the contract the following: 'Subject to the right of way of the N. & O. Railroad.' The said alteration and addition was made without the knowledge and without the consent of this defendant." And the court, in its instruction, submitted the question to the jury. The plaintiff insists that this was error. The evidence shows that, after there had been some negotiations between the parties, a contract was signed by the defendant, and returned to plaintiff's agent, to be forwarded for the signature of the plaintiff. The evidence shows clearly that the contract, at that time, was not completed. Some of the blanks for the insertion of the amounts of interest were not filled, and in other respects the contract was incomplete. The plaintiff's agent took the contract so signed by the defendant, and forwarded it to the plaintiff, who filled the blanks and corrected the description, making the section named "7," instead of "6," as plaintiff had no land in section 6, and signed the contract and returned it to his agent, who then delivered it to the defendant, and received from him the first payment thereon. There is no evidence in the record that the contract was in any way altered by the plaintiff or his agents after it was delivered and received by the defendants as the contract, and we think that the court erred in submitting the question to the jury.

The defendant claimed that when he discovered the alleged fraud he duly rescinded the contract, and the question of the rescission of the contract by the defendant was submitted to the jury by the court, against the objection of the plaintiff. In this we think, also, that the court erred. There is no evidence of a rescission of the contract by the defendant. The evidence relied upon is the testimony of the defendant himself, in which he testified that he notified plaintiff by letter—he could not say what date. He sent the letter by mail, directed to Lincoln, which appears to have been the proper postoffice address. He kept a copy of the letter, which he then offered in evidence. The copy was excluded by the court, so that there was no evidence before the jury either that the letter was properly stamped, or of the contents of the letter, or of the time when it was mailed, if mailed at all. Plaintiff denied that he ever received such a letter. This clearly was insufficient as evidence of a rescission of the contract. "It is a general rule that a party having a right of rescission, because of the fault or act of the other, should make known his rescission as soon as may be after he knows his right to rescind." 2 Parsons on Contracts (6th Ed.) 681; Brown v. Waters, 7 Neb. 424.

The court instructed the jury that they were the sole judges of the credibility of the several witnesses, and "should place such a degree of credibility on the testimony of the several witnesses as in their opinion the same is entitled to; and, if the jury believe from the evidence that any of the witnesses have purposely or knowingly testified falsely in any particular, the jury would be justified in disregarding such witnesses' entire testimony, unless it shall further appear that such witness has been corroborated by other sufficient and competent testimony." The rule should be limited to evidence on matters material to the issue, or matters in regard to which the witness cannot be presumed liable to mistake. The Santissima Trinidad, 7 Wheat. 283, 5 L. Ed. 454; Buffalo Co. v. Van Sickle, 16 Neb. 363, 20 N. W. 261; Omaha & R. V. R. Co. v. Krayenbuhl, 48 Neb. 553, 67 N. W. 447. Mr. Mohler was the principal witness for the plaintiff. He directly contradicted the defendant upon some material matters, and was thoroughly cross-examined, testifying upon very many matters that form no material part of the issue, and upon which the law will not presume that he could not be innocently mistaken. So that it was very important to the plaintiff, if an instruction of this nature was given to the jury, to have it limited to matters material to the issue, as under the evidence in this case it should have been. The use of the words in "any particular" in this instruction, instead of limiting it to material matters, was very prejudicial to the rights of the plaintiff.

It is recommended that the judgment of the district court be reversed and a new trial awarded.

OLDHAM and POUND, CC., concur.

Reversed and remanded.

SULLIVAN, J., absent, not voting.

OMAHA SAV. BANK v. ROSEWATER.

(Supreme Court of Nebraska. Oct. 1, 1901.)

BANKS—INSOLVENCY—APPOINTMENT OF RECEIVER—PETITION OF STOCKHOLDERS—ACTION BY BANK—DEFENSES.

1. Pleading examined, and *held* that the demurrer thereto was properly sustained.

2. A statute which provides a summary method by which a party may be divested of the control of his property, or his title thereto, solely by the acts of others, should be strictly construed.

3. The recitals in an instrument which is incorporated into a pleading are not in the nature of averments, and tender no issue.

Commissioners' Opinion. Department No. 3. Appeal from District Court, Douglas County; Fawcett, Judge.

Digitized by Google

"Not to be officially reported."

Action by the Omaha Savings Bank against Edward Rosewater. Judgment for plaintiff, and defendant appeals. Affirmed.

Crofoot & Scott and Morris & Marple, for appellant. Charles S. Elgutter, for appellee.

ALBERT, C. The Omaha Savings Bank, appellee, brought this action against Edward Rosewater, appellant, for the foreclosure of certain collateral pledged by the appellant to the appellee to secure the payment of a certain promissory note executed and delivered by the former to the latter. A trial was had, which resulted in a finding and decree for the appellee, and the record is now presented to this court for review.

The only ground relied upon for a reversal is the action of the district court in sustaining the demurrer to a portion of the answer, which is as follows:

"(2) That the pretended plaintiff has no right to prosecute its alleged action in this court for the reason that at the time of bringing this action, and ever since the 2d day of January, 1897, plaintiff was and is insolvent, and ceased to be a going concern, as a banking corporation, in fact as well as in law. That on or about the 2d day of January, 1897, long before the bringing of this action, said Omaha Savings Bank, being insolvent, by action of its stockholders, and under the provisions of section 35 of the banking law of the state of Nebraska, approved April 8, 1895, and taking effect August 1, 1895, passed, with all its assets, into the hands of the state banking board of the state of Nebraska; said board on said date finding that it was unsafe and inexpedient for said bank to continue to transact a savings bank business. That thereupon, on January 5, 1897, long before the bringing of this action, on application of certain persons, namely, Charles F. Manderson, Guy C. Barton, E. W. Nash, Thomas L. Kimball, E. L. Stone, John E. Wilbur, Francis W. Wessells, L. M. Bennett, J. J. Brown, Truman Buck, W. R. Morris, Earl W. Gannett (said persons being stockholders of said bank), and on their giving a certain bond unto the state of Nebraska, in the penal sum of $200,000 duly approved and accepted by said banking board, the assets of said bank were turned over by said banking board to one John E. Wilbur, as trustee for the above-named bounden parties, namely, Charles F. Manderson, Guy C. Barton, E. W. Nash, Thomas L. Kimball, E. L. Stone, John E. Wilbur, Francis W. Wessells, L. M. Bennett, J. J. Brown, Truman Buck, W. R. Morris, Earl W. Gannett, stockholders of said bank (the said Wilbur having been, by certain resolutions of the said stockholders of said bank, duly named by them as such trustee), for the purpose that they, the said bounden parties, make full settlement of all the liabilities of said bank within four years from said time. A copy of said bond, filed with the state banking board, with all attachments, is hereby attached, marked 'Exhibit A,' and made a part hereof.

"(3) Defendant says that no receiver, as by law provided, has been appointed to take charge of the assets of said insolvent bank. That said Wilbur, trustee for said bounden parties, namely, Charles F. Manderson, Guy C. Barton, E. W. Nash, Thomas L. Kimball, E. L. Stone, John E. Wilbur, Francis W. Wessells, L. M. Bennett, J. J. Brown, Truman Buck, W. R. Morris, Earl W. Gannett, to whom the assets of said insolvent bank have been turned over as aforesaid, accepted such trust from and after said January 5, 1897, has been and is now in possession of said banking assets, but has not been made the plaintiff in this action; that alleged plaintiff, the Omaha Savings Bank, herein, has no legal capacity to sue; that there is a defect of parties plaintiff; that alleged plaintiff, Omaha Savings Bank, is not the real party in interest herein; that the said Wilbur, trustee, is the real and proper party plaintiff in interest herein."

The appellant insists that the foregoing facts, taken from his answer, are sufficient to show that the appellee is not the real party in interest, and that it lacks legal capacity to sue, when viewed in the light of sections 34, 35, c. 8, pp. 91, 92, Laws 1895, which are as follows:

"Sec. 34. Bank Insolvent—Receiver. Whenever it shall appear to the state banking board from any examination or report, provided for by this act, that the capital of any corporation, partnership, firm or individual transacting a banking business in this state, is impaired, or that any corporation, partnership, firm or individual is conducting its, their or his banking business in an unsafe or unauthorized manner, and is jeopardizing the interest of its, their or his depositors, and that it is unsafe or inexpedient for such corporation, partnership, firm or individual to continue to transact a banking business, the said state banking board shall communicate the facts to the Attorney General who shall thereupon cause an application to be made to the district court of the county where such corporation, partnership, firm or individual has its, their, or his banking office, or to any judge of such court, for the appointment of a suitable person, as receiver to take charge of the business and affairs of and wind up such bank. Provided, however, that if the judge of the district court of the county where the application for such receiver shall be made, shall be absent therefrom at the time such application is to be made, then, in that case, any judge of the Supreme Court may appoint such receiver, but all proceedings in relation to such receivership thereafter shall be had before the district court, or judge thereof, which might have appointed such receiver in the first instance, and the petition and order appointing such receiver shall be forthwith transmitted to the clerk of the district court of the county in which said insolvent bank is

located. It shall be sufficient to authorize the appointment of a receiver, if the facts set forth in this section shall be made to appear.

"Sec. 35. The receiver provided for in section thirty-four (34) of this act, shall be required to give a bond in such sum as the court or judge from whom he receives his appointment, may direct, with at least two (2) good and sufficient sureties which shall be approved by the clerk of the district court in the county in which such insolvent bank is located. Such receiver shall thereupon take possession of all books, records and assets of every description belonging to said bank, collect all debts, dues and claims owing to and belonging to such bank; sell and compound all bad and doubtful debts, when approved by the court or judge; sell all real and personal property belonging to such bank, on such terms and conditions as the court or judge shall direct. The court or judge may authorize such receiver to employ a competent attorney to represent him in all legal proceedings relating to such receivership, who shall receive such compensation as the court or judge may allow. Whenever any receiver of any corporated bank shall file a report with the court or judge thereof, setting forth the fact that in the opinion of such receiver, the assets of such bank are not sufficient to pay the liabilities of such bank within a reasonable time, the court or judge may order such receiver to proceed at once to collect from the several stockholders of such bank, who are liable therefor any or all of such liabilities as shall be necessary for the payment of all the liabilities of such bank. Whenever any such receiver shall have paid in full all the liabilities of such bank, and shall have remaining in his possession any property or assets, belonging to said bank, he shall be ordered by such court or judge to deliver the same to the party or parties entitled thereto. Provided, however, that whenever the officers, stockholders or owners of any insolvent bank shall give a good and sufficient bond, running to the state of Nebraska, conditioned upon the full settlement of all the liabilities of such bank, by such officers, stockholders or owners, within stated time and said bond shall have been approved by the state banking board, then the state banking board shall turn over all the assets of such bank to the officers, stockholders or owners furnishing said bond."

Appellant's argument is well summed up in the following paragraph, taken from his brief:

"In the suit at bar, the bank, as a corporation, has no interest whatever. Its assets, among which are the note and securities upon which this action is brought, have passed out of its hands into the hands of others, who, by authority of the statute, have stepped into its shoes for the purpose of collecting this debt."

If the action of the stockholders of the bank, taken in pursuance, or attempted pursuance, of the statute under consideration, does not result, as appellant claims, in divesting the bank, as a corporate body, of its control over its assets, and its legal title thereto, and investing the same in the stockholders, then, of course, his argument fails. If it does so result, it will be conceded, we think, that to attain that result by means of such statute—a statute that so summarily divests the owner of the control of his property and his legal title thereto—it must appear that there has been a strict compliance with the terms of such statute. In our opinion, the answer fails in this regard. The statute names three classes of persons who may furnish bond and receive the assets of an insolvent bank, namely, the officers, the stockholders, and the owners. From an examination of section 35, aside from other considerations, it is clear to our minds that whatever class undertakes the trust, assuming that a compliance with the statute has the effect claimed by the appellant, it must be at least a majority of that class, and a less number would not fulfill the requirements. Hence, should the state banking board accept the bond of a less number, and turn over the assets of the bank to them, The right of the bank to control such assets, and its legal title thereto, would not be divested. That portion of the answer demurred to alleges the giving of a bond by certain persons, who are described as stockholders, and that the assets were turned over to one Wilbur, whom said stockholders had named as trustee for that purpose. But it is not alleged that such persons were all, or even a majority, of the stockholders of the bank; nor does the pleading assailed contain any averment from which such fact may be justly inferred.

It is urged, however, that the bank, as a corporation, through its directors and stockholders, permitted its assets to be turned over to said trustee without protest, and that no question has been raised by the bank in any proceedings, so far as the record discloses, questioning the authority of the stockholders over the assets. That part of the answer assailed shows that the assets passed into the hands of the state banking board, by action of the stockholders, under the provisions of section 35, supra; but it does not show that the transfer from such board to the trustee was with the consent of the bank, acting through all of its officers or stockholders, or a majority of either of said classes. The state banking board was a mere custodian. It took no title to the assets, and could convey none. Appellant concedes that the stockholders named, in their capacity as trustees under the statute, do not trace their title through the state banking board, but acquired it by virtue of the statute. As we have seen, in order to predicate title upon the statute, it must appear that its provisions have been strictly pursued. That fact does not appear in this case. Hence neither they, nor the trustee appointed by them,

Digitized by Google

acquired any title to the assets by virtue of the statute. If, by acquiescence in the proceedings or by a ratification thereof by the bank, it has become bound thereby, that fact should affirmatively appear in the record. It does not so appear. It is true, the bond alleged to have been given by the stockholders named in the answer, which is made a part of the pleading assailed, purports to have been executed by the bank, as principal, acting through its president and secretary, and that it was given to procure the delivery of the assets of the bank to such stockholders or their trustee. But it is not alleged in the answer that the bond was executed by the bank, nor that the bank was a party to it. The recitals in the bond do not stand as an averment of facts, and tender no issue. Sprague v. Wells (Minn.) 50 N. W. 535. This being true, the bond, although it purports to have been executed by the bank, and is made a part of the answer, does not show that the bank was a party to the transaction. It is conceded that the banking board took no title to the assets. We have seen that neither the stockholders nor their trustee acquired any. It follows, we think, that the title to the assets, including the note in controversy in this suit, together with the collateral securing it, remained in the bank; that it is the real party in interest herein; and that the demurrer was properly overruled.

It is recommended that the decree of the district court be affirmed.

AMES and DUFFIE, CC., concur.

Affirmed.

SULLIVAN, J., absent, not voting.

SOUTHERN PINE LUMBER CO. v. FRIES.

(Supreme Court of Nebraska. Oct. 1, 1901.)

PLEADINGS—AMENDMENT—PAYMENT—AGENCY—EVIDENCE—INSTRUCTIONS—QUESTION FOR JURY.

1. After the issues have been made up, it rests within the sound judicial discretion of the trial judge to permit amendments of the pleadings in furtherance of justice, and on such terms as may be proper, subject to review for an abuse of discretion.

2. Amendments examined, and *held* not to be an abuse of judicial discretion.

3. Evidence examined, and *held* sufficient to submit to the jury whether Gould & Co. were the agents for the plaintiff in making the collection.

4. Instructions examined, and *held* to properly state the law of the case.

5. Where the facts are of such a nature, even though not conflicting, that honest, impartial minds might fairly draw from them different inferences or conclusions, the question to be determined is not one of law for the court, but one of fact, to be solved by the triors of fact.

Commissioners' Opinion. Department No. 1. Error to District Court, Valley County; Kendall, Judge.

"Not to be officially reported."

Action by the Southern Pine Lumber Company against Martin L. Fries. Judgment for defendant, and plaintiff brings error. Affirmed.

A. M. Robbins, for plaintiff in error. Clements Bros., for defendant in error.

DAY, C. This action was commenced by the Southern Pine Lumber Company in the district court of Valley county against Martin L. Fries to recover the contract price of a car of lumber alleged to have been sold and delivered by the plaintiff to the defendant. One of the defenses interposed, and the one submitted to the jury, was that of payment. The trial resulted in a verdict favorable to the defendant, upon which a judgment was subsequently rendered, to review which the plaintiff has brought the case to this court by proceeding in error.

The facts essential to an understanding of the question presented by the record may be briefly stated as follows: In January, 1892, the defendant received from J. W. Gould & Co., of Omaha, a circular letter announcing that they were wholesale dealers in yellow pine lumber, and soliciting the defendant's trade. About the same time Gould & Co. sent to defendant a price list of the different classes of stock handled by them. On April, 1892, the defendant sent an order to Gould & Co. for a car of lumber, and in due course of time received a car consigned to him by the plaintiff from Texarkana, Tex. About the same time of the delivery of the lumber, defendant received from the plaintiff an invoice or bill of the lumber, in the ordinary form of a statement of account, reciting that M. L. Fries had bought of the Southern Pine Lumber Company the items composing the account. The defendant promptly paid the amount of the bill to Gould & Co., less freight and discount, who in turn made settlement with the plaintiff of the amount thus collected. On May 1, 1892, the defendant sent an order for another car of lumber to Gould & Co., and on July 19th received a car consigned to him as before from the plaintiff, from Texarkana, and also received a bill or statement of account, substantially the same as in the former transaction; no letter or communication accompanied the invoice. Defendant checked over the lumber, made a few important changes in the bill for overcharges, and, in order to avail himself of the 2 per cent. discount allowed for payment within 10 days, sent a draft to Gould & Co. on July 28th for the amount of the bill, less the overcharges, discount, and freight. This draft was received by Gould & Co., and the money called for by it was paid to them. It appears, however, that Gould & Co. neglected to remit the amount to the plaintiff, and soon thereafter failed in business, and departed for parts unknown.

Digitized by Google

At the opening of the trial, the defendant's answer set up as a defense that the contract of purchase and sale of the lumber was between the defendant and Gould & Co., that he had no correspondence or dealing with the plaintiff, and that he had paid Gould & Co. for the lumber, and had no knowledge that the plaintiff had or claimed any interest in the lumber or the proceeds thereof until long after the payment had been made to Gould & Co.

During the trial, defendant asked and obtained leave to amend his answer by an allegation that, if said lumber belonged to the said plaintiff, the said Gould & Co. had full authority to collect payment therefor, and plaintiff is estopped to deny said authority, and that plaintiff did receive from said Gould & Co. payment for said lumber. The amendment was made over the objection of the plaintiff, and is one of the errors now complained of.

Section 144 of the Code of Civil Procedure provides that "the court may, either before or after judgment, in furtherance of justice, and on such terms as may be proper, amend any pleading, or process, or proceeding, by adding or striking out the name of any party, or by correcting a mistake in the name of a party, or a mistake in any other respect, or by inserting other allegations material to the case, or, when the amendment does not change substantially the claim of defense, by conforming the pleading or proceeding to the facts proved. And whenever any proceeding taken by a party fails to conform in any respect to the provisions of this Code, the court may permit the same to be made conformable thereto, by amendment." This language clearly vests the court with a judicial discretion as to allowing the filing of amendments upon such terms as may be proper, subject, of course, to review for an abuse of discretion. Commercial Nat. Bank v. Gibson, 37 Neb. 750, 56 N. W. 616; Central City Bank v. Rice, 44 Neb. 594, 63 N. W. 60; Omaha & R. V. R. Co. v. Moschel, 38 Neb. 281, 56 N. W. 875.

The plaintiff did not ask for a continuance, or make objection to proceeding with the trial, or make any showing or statement that it was not prepared to proceed with the trial under the issue raised by the amendment to the answer. No prejudice to the plaintiff is pointed out, directly arising from allowing the amendments to be made, and none will be presumed.

There is no dispute that the defendant paid to Gould & Co. the amount due for the second car of lumber. The real question presented in the case is whether Gould & Co. were the agents of the plaintiff in receiving payment. The plaintiff insists that the facts shown by the record are not sufficient to support the finding of the jury, and that the court should have given the instructions asked by the plaintiff, which, in effect, amounted to an instruction to find for the plaintiff. We have carefully gone over the testimony, and, while it is not entirely satisfactory as establishing an authority in Gould & Co. to make collection, still such facts are shown as we think were proper to be submitted to a jury for its determination of that question. The plaintiff knew the second order had been given to Gould & Co., just as the prior one had; that defendant had remitted to Gould & Co. for the first order; that no correspondence had passed between plaintiff and defendant, and it was a fair inference, at least, that the defendant would remit for the second car in the same manner and through the same channels as in the first instance. It would seem that, if the plaintiff was not satisfied to allow Gould & Co. to collect the money for it, some notice or warning should have been sent to the defendant. The plaintiff evidently regarded it as its duty to so notify the defendant, for one of its witnesses testified that such notice was sent to him. The defendant, however, swears that no such notice was ever received, and plaintiff, while ordinarily keeping copies of letters, had none in this instance. There were a number of details, unnecessary to specifically mention, which tended to cast some discredit on the value of plaintiff's testimony; and while the facts, in the main, are not conflicting, they were of such a nature that honest, impartial minds might fairly draw from them different inferences or conclusions. When such a condition is presented, the question to be determined is not one of law for the court, but one of fact, for the consideration and determination of the triors of fact. Thomson v. Shelton, 44 Neb. 647, 68 N. W. 1055.

The plaintiff also claims there was error in the instructions to the jury. The instructions were very brief, and were, in substance, that the burden of proof was on the defendant to show that he had paid Gould & Co. for the lumber, and that they were authorized, either expressly or by implication, to collect payment therefor; that such authority may be implied from circumstances, acts, and dealings of the parties; that the fact that Gould & Co. did collect the pay for one car of lumber from defendant and paid same to plaintiff, and plaintiff accepted same, was a circumstance they might take into consideration in determining whether or not plaintiff was, by implication, authorizing and consenting that Gould & Co. might make such collection. We think the instructions fairly submitted the questions involved to the jury.

It is therefore recommended that the judgment be affirmed.

HASTINGS and KIRKPATRICK, CC., concur.

Affirmed.

SULLIVAN, J., absent, not voting.

Digitized by Google

STORM v. HOLMES.

(Supreme Court of Nebraska. Nov. 20, 1901.)

APPEAL—ERROR WAIVED—AFFIRMANCE.

1. A party will not be heard to complain of the action of the trial court when the action complained of was at his instance.

2. Where two or more parties join in a petition in error, if the judgment is right as to one it must be affirmed as to all.

Commissioners' Opinion. Department No. 3. Error to District Court, Madison County; Robinson, Judge.

"Not to be officially reported."

Action by S. W. Storm against D. A. Holmes. Judgment for defendant, and plaintiff brings error. Affirmed.

Geo. A. Latimer, for plaintiff in error. Powers & Hays, for defendant in error.

ALBERT, C. This action was brought by S. W. Storm against D. A. Holmes in the district court of Madison county to recover on a state of facts which it is not necessary at this time to repeat. By agreement, the matters in difference were submitted to arbitration. The arbitrators found in favor of the defendant, and reported accordingly. Afterward a petition was filed on behalf of the plaintiff to set aside the report of the arbitrators, and for a new trial of the cause. Thereupon the plaintiff, in his own proper person, informed the court that the motion to set aside the findings of the arbitrators had been made without his knowledge, consent, or approval; that he was satisfied with their award; that he wanted no further trouble or expense made in the premises—and asked the court to end the litigation either by dismissal of the cause, or an affirmance of the award of the arbitrators. Thereupon George A. Latimer, who appears to have acted as attorney for the plaintiff in the case, and for 50 per cent. of any judgment that might be recovered in the case, made a showing to the court that he had previously filed a notice of an attorney's lien "upon the papers in the case, and that the same was on file before any instrument attempting to dismiss the plaintiff's said action was filed on the part of the defendant by the defendant's attorney in this case," and asked that his rights in the premises should be protected. He also filed a motion asking that he be substituted as party plaintiff in the action. The court overruled the motions of the attorney, and dismissed the petition for setting aside the award of the arbitrators, and affirmed said award. The case is brought here on error.

The petition in error, on its face, purports to be that of the plaintiff below. In the petition, S. W. Storm is described as plaintiff in error. It begins with the usual formula, "The plaintiff complains of the defendant." It is signed S. W. Storm, plaintiff, and George A. Latimer, intervener. As appears from the foregoing statement, the action of the court complained of was at the instance of the plaintiff, so that he is in no position to complain in this court. So far as Latimer is concerned, should it be held that he is party to these proceedings, he has joined with the plaintiff in the assignments of error, so that he must stand or fall with the plaintiff. As we have seen, the plaintiff has no standing in this court. It follows that Latimer can have none. Eickhoff v. Eikenbary, 52 Neb. 332, 72 N. W. 308.

We recommend that the judgment of the district court be affirmed.

AMES and DUFFIE, CC., concur.

Affirmed.

¶ 2. See Appeal and Error, vol. 3, Cent. Dig. § 4562.

PHŒNIX INS. CO. v. HOWE.

(Supreme Court of Nebraska. Nov. 20, 1901.)

ERROR—RECORD—BILL OF EXCEPTIONS—SALE—CONFIRMATION.

1. A bill of exceptions allowed and signed by the trial judge becomes a part of the record in the case, and its recitals cannot be impeached by affidavits filed for that purpose.

2. Record examined, and *held* to disclose no error on the part of the court on confirmation of a sale.

Commissioners' Opinion. Department No. 3. Appeal from District Court, Webster County; Beall, Judge.

"Not to be officially reported."

Action by the Phœnix Insurance Company against William H. Howe. Judgment for plaintiff. Defendant appeals. Affirmed.

J. S. Gilham, for appellant. George W. Wright, for appellee.

DUFFIE, C. This is an appeal from an order confirming a sale. The bill of exceptions allowed by the trial court discloses no error in the proceedings. A motion to confirm the sale was made May 10, 1898. The court thereupon made an order that the defendant and all persons interested show cause why the sale should not be confirmed by 2 o'clock p. m. of that day. At 2 o'clock p. m. the parties appeared, and by agreement the time to show cause was extended to 5 o'clock p. m., at which time an order was entered confirming the sale; no objections thereto being made by the defendant. This is the case as shown by the record before us. The defendant complains that the bill of exceptions does not fairly present the proceedings had in the district court. If the trial judge refused to sign and allow exceptions which correctly recited the proceedings had before him, the defendant had his remedy to compel him to do so. The bill of exceptions, as allowed, becomes a part of the record of the case, and this court is bound by what it recites, and the statements and affidavits of an attorney in the case con-

¶ 1. See Appeal and Error, vol. 3, Cent. Dig. § 2866.

Digitized by Google

tradicting or qualifying the recitals of the bill cannot be regarded.

We recommend that the order appealed from be affirmed.

ALBERT and AMES, CC., concur.

Affirmed.

EAGER v. BLAKE.

(Supreme Court of Nebraska. Nov. 20, 1901.)

JUDGMENT—VACATION—REVIEW.

1. The power of the court to modify or vacate its own judgments or orders at the term at which they were rendered is an inherent power, and exists independent of any statute, and can be reviewed only for an abuse of discretion.

Commissioners' Opinion. Department No. 1. Error to District Court, Lancaster County; Holmes, Judge.

"Not to be officially reported."

Action by George W. Blake against Frank D. Eager. Judgment for plaintiff. Defendant brings error. Affirmed.

J. C. McNerney, for plaintiff in error. F. A. Boehmer, for defendant in error.

DAY, C. This action was commenced by George W. Blake in the district court of Lancaster county against Frank D. Eager to recover a balance alleged to be due upon the purchase price of certain interests in a newspaper. Issues were joined, and on March 7, 1898, the case was reached for trial, in the absence of the plaintiff and his attorney, and upon application of defendant was dismissed without prejudice, at the costs of the plaintiff. On March 9, 1898, the plaintiff filed a motion to set aside the order of dismissal and to reinstate the case. This motion was supported by affidavits on the part of plaintiff's attorney and others, which clearly indicated that plaintiff had not been guilty of any laches in looking after the case. This motion was entered upon the motion docket, and submitted to the court, and upon consideration thereof, and at the same term, the order of dismissal was vacated and set aside and the cause reinstated. The defendant then filed a special appearance and objected to the jurisdiction of the court over his person, for the reason that no notice of any motion or application to vacate the order of dismissal was ever served on him. This motion was overruled, and, defendant electing to stand on his special appearance, judgment was entered against him.

The only question presented by the record arises upon the ruling of the court upon the objection to its jurisdiction. The rules of court in that judicial district, in so far as they have any application to the question now being considered, are as follows: "To entitle a motion or demurrer to be heard on any motion day, the same must be filed and entered on the proper motion docket on or prior to Thursday of each week. A motion or demurrer so filed and entered on the proper motion docket, with date of entry, a brief statement of the object of the motion, and the names of the attorney of record in the cause, shall be notice thereof to the opposite party in all cases where a different notice is not required by statute or rule of court." It is clear that the plaintiff complied with the provisions of the foregoing rule, and the case does not come within the exception therein stated.

The power of the court to modify or vacate its own judgments or orders at the term at which they were rendered is an inherent power, and exists independent of any statute, and can be reviewed only for an abuse of discretion. In Bradley v. Slater, 58 Neb. 554, 78 N. W. 1069, it is said: "A court of general jurisdiction possesses inherent power to vacate or modify its own judgments at any time during the term at which they are pronounced." The action of the trial court seems to have been prompted by a desire to do justice between the parties, and, from the record made, the ruling was eminently just and right. No prejudice has resulted to the defendant by having the case reinstated.

In our opinion the ruling of the court was right, and we therefore recommend that the case be affirmed.

HASTINGS and KIRKPATRICK, CC., concur.

Affirmed.

WESTINGHOUSE CO. v. TILDEN.

(Supreme Court of Nebraska. Oct. 1, 1901.)

PRINCIPAL AND AGENT—RECOVERY OF COMPENSATION.

1. An agent for the sale of machinery, whose commission is to be paid when notes taken on sales are collected, or, at the option of his principal, by turning over to him such notes of average date of maturity as would in amount cover his commission, may maintain an action against his principal for the amount of his commission, prior to the collection of the notes, where the principal has for an unreasonable length of time neglected to enforce collection.

2. Evidence examined, and judgment in favor of the plaintiff modified and affirmed.

Commissioners' Opinion. Department No. 3. Error to District Court, York County; Sedgwick, Judge.

"Not to be officially reported."

Action by Josiah H. Tilden against the Westinghouse Company. Judgment for plaintiff. Defendant brings error. Modified.

Mockett & Polk and Charles F. Stroman, for plaintiff in error. N. V. Harlan, for defendant in error.

DUFFIE, C. This case was before this court at a former term, and the judgment in favor of the plaintiff below was reversed. See 56 Neb. 129, 76 N. W. 416. A statement of the case found in the former opinion is as

¶ 1. See Appeal and Error, vol. 3, Cent. Dig. § 3878.

Digitized by Google

follows: "Josiah H. Tilden for several years acted as agent for the Westinghouse Company in selling farm machinery, and brought this suit to recover moneys alleged to be due for services, for commissions on goods sold, and for moneys paid at the defendant's request. The petition alleged three written contracts—one for the year 1888, one for 1889, and one for 1890—and recovery was sought only on the basis of these contracts. A verdict was returned within the amount alleged in the petition to be due, but for more than that amount deducting therefrom claims admitted during the trial to be erroneous. A remittitur of $75 was entered, and judgment rendered for the remainder."

By the terms of the contract, Tilden was required to take notes to the company for deferred payments on all machinery sold, and transmit them to the company. On cash payments he was allowed to retain his commission, but, as to deferred payments, the contract was explicit that the company should remit his commission only in proportion as payment should be actually made. A large part of the recovery in the former case was for commission represented by unpaid notes, and an instruction of the court permitted a recovery in such case, provided the defendant had refused to turn the notes over for plaintiff to collect, and had failed to use reasonable diligence whereby the notes would have been collected. It was principally upon the giving of this instruction that the former case was reversed, this court saying: "There was no requirement in the contract that the defendant should send the notes to plaintiff for collection, and there was no averment in the petition that the defendant had by its negligence failed to collect the notes."

Upon the case being remanded to the district court for a second trial, the plaintiff, on April 21, 1899, filed an amended petition, claiming commissions on all which had been collected to that date, and also as to notes which were then uncollected. The petition charged "that the defendant was careless and grossly negligent in looking after the collection of the same, and if said notes are still unpaid, as plaintiff is informed and believes, it is through the carelessness and negligence of the defendant, and the plaintiff is entitled to full commission on said notes." The case was tried to the court, a jury being waived, and the court made a special finding as to the several matters in dispute between the parties. Judgment was entered for the plaintiff in the sum of $606.26, from which judgment the case is brought here on error.

One of the errors complained of is that the court allowed a recovery on what is termed "unearned commission." The ninth paragraph of the contract between the parties provided, in substance, that Tilden was to take cash or notes on all sales made for the company. Where notes were taken they were to be sent to the company, and, when collection was made, the company was to remit to Tilden such proportionate share of the collection as amounted to his commission on the collection made, or, at its option, the company had the right to turn over to Tilden, out of the notes taken by him, such notes as would in amount cover his commission. It will be seen, therefore, that Tilden was entitled to his commission on deferred payments only when collections were made by the company, and part of the "unearned commissions" spoken of above are the commissions due Tilden on payments made to the company on notes collected between the date of the filing of the original petition in this case and the time of filing the amended petition upon which the case was tried.

The object which the plaintiff had in view in filing an amended petition was undoubtedly to claim commission due him on collections made after the commencement of the action and the date on which the amended petition was filed. The more regular course would undoubtedly have been to file a supplemental petition, setting up the fact that commissions were due the plaintiff on moneys collected by the defendant since the action was commenced, but no objection appears to have been made to the trial court to the course pursued. No objection was interposed that the amended petition made a claim for commission not due when the action was commenced, and we incline to the opinion that under these circumstances the district court committed no error in treating the amended petition as a supplemental petition, and allowed the plaintiff to recover for the commission included in the amended petition and not embodied in the original.

By the terms of the agreement between the parties, the collection of all notes was left to the defendant. The evidence is clear that the defendant was negligent in the collection of these notes. Under the terms of the contract the defendant owed the plaintiff the duty of reasonable diligence in the collection of these claims. If it desired to extend time to its patrons, it had no legal right to ask the plaintiff to await their convenience in the collection of the amount due him as commission on these notes. We think that the facts amply justify the court in finding that the plaintiff was entitled to recover for the amount of his commission, although not collected by the defendant because of the negligence of the defendant in making collections.

One item of dispute grows out of the fifth finding of the court. It is as follows: "(5) The court further finds that on or about the 13th day of August, 1889, the plaintiff, as the agent for the defendant, sold one of the defendant's thrashing outfits, consisting of an engine and separator, to Joseph Moist, for the agreed price of $1,700, and took therefor $100 cash, and the promissory notes of said Moist, said notes being described as

Digitized by Google

lows: One for $500.00, due December 1, 1889, one for $550.00, due December 1, 1890; and for $550.00, due December 1, 1891; all of said notes being dated August 13, 1889, and bearing interest at seven per cent. per annum. That in the year 1887 the defendant shipped the said thrashing outfit to Lincoln, Nebraska, to be there exhibited at the State Fair then held, and the plaintiff, as its agent, did so exhibit it at said fair; and afterwards the defendant caused said thrashing outfit to be shipped to Bradshaw, Nebraska, and the said outfit was, at the time of entering into the agency contract between the plaintiff and defendant, being stored at Bradshaw by the plaintiff for the defendant. That the notes given for said outfit have been paid in full; and, as a matter of law, the court concludes that the plaintiff is not liable to the defendant for freight charges on said machine, and is entitled to recover his commission thereon, amounting to $189.00, with interest thereon." The contracts of agency for the years above mentioned were all in the same terms, with the exception of the commissions to be paid to Tilden. In all of these contracts the plaintiff agreed to pay the freight charges on machines shipped to him.

The plaintiff desired to exhibit one of the defendant's machines at the State Fair held in Lincoln in the fall of 1887, and, relating to this, the company wrote to Tilden as follows: "We are in receipt of your favors of the 9th and 11th, and note contents. Will ship repairs ordered by express at once. In regard to Fair rig will say we are perfectly willing to send one and advance the freight, but would expect you to provide storage and keep the machinery insured, if not sold, and pay expense of exhibiting at Fair, which should not be large. We would, however, make the discount from regular list 20%, in place of 15 as heretofore, on this and any other machinery sold this season." We cannot discover in this letter any agreement on the part of the company to be chargeable with the freight. The course of business, as we understand it, was for Tilden to order machines as he made sales, and it would hardly be expected he should pay freight on a machine, for the purpose of exhibiting it at the State Fair, unless a sale was afterwards made. For this reason, as we understand it, the company agreed to advance the freight; but, if a sale of the machine was afterwards made by Tilden, he would be charged up with the freight the same as on all other machines which were ordered by him. The freight in this case was $128, which amount should have been charged to the plaintiff, and the judgment in his favor reduced by that amount.

The plaintiff in error further complains that the court allowed interest upon the commissions due on the notes. From the ninth paragraph above referred to it will be seen that one method of paying the commissions due the plaintiff on account of notes taken on sales made, was by turning over to him a proportionate share of the notes, if the company so elected. Whether this was done in any instance does not appear, but, if done, the plaintiff would certainly be entitled to the interest on the notes set aside to him in payment of commission. This evidently contemplates that the plaintiff had an interest in the notes to the extent of his commission, and, if so, he was entitled to the interest accruing upon his proportionate share of the notes. The condition of the record is in such shape that we cannot be certain that we have correctly stated the account between the parties. We have endeavored to arrive at a just conclusion, and that by a modification of the judgment, by requiring the plaintiff below to remit the sum of $128 erroneously allowed for freight on what is known as the "State Fair rig," will do justice to the parties as nearly as can be ascertained from the record before us.

We therefore recommend that the plaintiff below be permitted to remit the sum of $128 from the judgment in his favor, and that the judgment, as thus modified, be affirmed.

ALBERT and AMES, CC., concur.

Remittitur.

SULLIVAN, J., absent, not voting.

KLINGENFELD v. HOUGHTON et al.

(Supreme Court of Nebraska. Nov. 20, 1901.)

MORTGAGE—FORECLOSURE—LEGAL PROCEEDINGS TO COLLECT—DEFAULT IN INTEREST.

1. Evidence of negotiations for a settlement, and an extension of time by payment of interest, and of efforts to avoid a suit being brought on a mortgage, and of declarations that if suit was brought a stay would be taken, *held* to support finding that legal proceedings had not been taken to collect debt secured by mortgage.

2. On a note bearing 6 per cent. interest, but providing that all should become due at option of holder on a default of interest, and bear 10 per cent. per annum from maturity, holder not entitled to higher rate till option declared—in this case by suit.

Commissioners' Opinion. Department No. 1. Appeal from District Court, Dawes County; Kinkaid, Judge.

"Not to be officially reported."

Action by Henry Klingenfeld against Fred J. Houghton and others. Judgment for plaintiff. Defendants appeal. Affirmed.

Allen G. Fisher, for appellants. A. W. Crites, for appellee.

HASTINGS, C. Appeal from a decree in foreclosure, from Dawes county, of a mortgage dated January 2, 1893, and filed for record January 25, 1893, to secure a note for $525, and interest coupons, at 6 per cent. per annum. The note contained a provision that, if the interest was not paid when due, the principal note should become due and pay-

Digitized by Google

able, without notice, at the option of the legal holder, and bear interest at the rate of 10 per cent. per annum after maturity. The mortgage provided for a sale of the property, and payment of the amount due on the note, according to the terms thereof, at any time after default made. An answer was filed by appellant Joseph B. Moran, claiming a judgment whose date is not alleged, and which is asserted to be a lien upon the premises to the amount of $270 and costs. To this a reply was filed, alleging that this judgment was obtained December 15, 1893, and at that time and ever since the premises were the homestead of Fred J. Houghton and Maggie Houghton, and the judgment no lien. An answer was filed by the defendants Fred and Maggie Houghton, asserting, first, that there was no cause of action in plaintiff's petition; second, a general denial; third, denying the corporate existence of the banking and trust company; fourth, denying the ownership of Klingenfeld, and alleging his disqualification, as an alien, to hold real estate; fifth, denying that the plaintiff had any interest in the action, and alleging that it was brought by and for the banking and trust company and its receiver; sixth, denying any assignment to, or payment of consideration for such assignment by, plaintiff; seventh, alleging usury in the loan; and, eighth, that the action was prematurely brought. At the trial the notes, mortgage, and assignment were admitted in evidence over defendants' objection, and also four tax receipts. Evidence was also produced of negotiations between plaintiff's attorney and defendants for settlement of the claim, of the threatening of suit, and of the solicitation of defendants that no suit be brought, and of promises to pay. One witness testified to a computation of the amount due on the mortgage at $794.95, and for taxes of $150.60; making a total, as stated in the record, of $944.05. Defendants moved to dismiss because of the insufficiency of the testimony, and that the suit was premature, which was overruled. They then offered in evidence some depositions taken by the plaintiff, which were objected to on the ground that they did not support defendants' allegations, which objection was sustained. and no other evidence offered on the part of defendants. Decree was entered for $944.05.

On appeal. defendants claim that no evidence was introduced as to the priority of plaintiff's lien over that of Moran's judgment. To this it need only be said that no evidence whatever was produced that Moran held any judgment, or that anything was due upon it. The reply admits its existence, but does not admit any priority. It alleges that the judgment was obtained in December, 1893, whereas plaintiff's mortgage was filed in January of that year. On behalf of defendants Houghton, it is claimed that there was no proof that plaintiff owned the note, but the assignment of the mortgage, which certainly would carry with it the note, is in the record, and seems to have been properly admitted. Appellants' claim that all defenses good against the original holder are good against these notes may be allowed. They do not seem to have been indorsed, and in the absence of such indorsement, of course, any defense against them in the hands of the original holder was still available, but none such was attempted to be proven.

There are only two questions in the record; one being whether or not there is sufficient evidence that no other action had been brought, to uphold the finding of the court, under the rule of Jones v. Burtis, 57 Neb. 694, 78 N. W. 261. To this it is to be said that the notes are without indorsement, or indication of any other action having been brought upon them. It appears from the evidence of plaintiff's attorney that he was well acquainted with the defendants Houghton; that, just before the commencement of this action, he visited them, presented these documents, and asked payment, and offered to accept payment of the interest then due, and give an extension of the time for payment of the balance; that defendants said they owed the notes, and intended to pay them, but could not do so just then, and would see what they could do; that afterwards F. J. Houghton said he found himself unable to raise money to make payment of the interest, but would as soon as he could; that he did not want suit brought on the notes, and was told that instructions were peremptory to commence action if not paid, and the instructions were shown him—that the interest must be met, or suit brought—and he then said that, if suit must be brought, he would take a stay, and would be ready and shape himself up so he could take care of it. It would seem that this was sufficient, prima facie, to warrant the court in concluding that no previous action had been brought, and that therefore this objection to the decree is not good.

The only remaining question is as to the amount due at the time of this foreclosure. By the terms of the note, the whole amount was to become due and payable, without further notice, at the option of the legal holder, and bore interest at the rate of 10 per cent. after maturity. There is no indication in this record of any option to declare the whole amount due. In fact, the testimony indicates the reverse of such intention prior to the beginning of the action, which was on September 29, 1897. It does not appear that any interest was ever paid. The amount due on the mortgage would therefore be $525, and 6 per cent. interest to September 29, 1897, together with interest on the coupons after their maturity at 10 per cent. per annum, under the agreement. We therefore allow, as the amount of this decree, $525, its principal; 9 coupons, of $15.75 each, amounting to $141.75; interest on each coupon from its maturity to the commencement of the action, amounting in all to $31.77; interest

Digitized by Google

6 per cent. on $525 from July 1st, when the ninth coupon matured, to September 29th, when the action was begun, $7.62; making a total due on the notes at commencement of action $706.14. And to this should be added 10 per cent. upon $525 from the institution of the action, September 29, 1897, to March 9, 1898, when the decree was rendered, viz., $23.33; making a total of $729.47 due on the mortgage, by its terms, when the decree was rendered, besides the taxes. The taxes paid, of which the receipts are by the mortgage agreed to be evidence, and which bear 10 per cent. interest, were $36.33, December 18, 1894; $32.16, December 18, 1894; $26.88, September 25, 1895; and $13.45, October 21, 1896. These were the receipts submitted in evidence. They did not correspond with the allegations of the petition. The amount of those payments at the date of the decree was $139.47. The amount of the payments alleged in the petition is only $94.89. The receipts, however, were admitted in evidence, and will be counted at their face. The amount due, therefore, at the time of this decree, on both notes and taxes, was $868.94, instead of $944.05, as the decree recites; and it should be reduced to the true amount of $868.94.

It is therefore recommended that the decree of March 9, 1898, be modified, and reduced to the amount of $868.94, bearing interest at 10 per cent. per annum from its date, and be affirmed as to such amount.

DAY and KIRKPATRICK, CC., concur.

Affirmed.

WATERS v. RAKER.

(Supreme Court of Nebraska. Nov. 20, 1901.)

JUDGMENT—MOTION TO VACATE—TENDER OF ANSWER.

1. A party served by publication, who seeks to vacate a judgment after the term at which it was rendered, must tender an answer with his application to vacate, showing a valid defense; and, to entitle him to relief, the court must adjudge that such defense is prima facie valid.

Commissioners' Opinion. Department No. 1. Error to District Court, Cass County; Ramsey, Judge.

"Not to be officially reported."

Action by William S. Waters against Catherine M. Raker. Judgment for defendant, and plaintiff brings error. Reversed.

Saml. M. Chapman, for plaintiff in error. J. H. Halderman, for defendant in error.

DAY, C. On September 11, 1896, William S. Waters commenced an action in the district court of Cass county against Catherine M. Raker to recover on account of certain amounts paid out by him at the instance of the defendant, and for her use and benefit. Defendant being a nonresident, an attachment was issued on that ground, and levied upon certain lots owned by her. Service of summons could not be made personally upon the defendant, and a notice was served by publication. On March 23, 1897—that being one of the days of the March term of said court—judgment was rendered in favor of the plaintiff for $60.10, together with interest and costs. The judgment contained a recital as follows: "That the defendant has been duly served with due and lawful notice of the pendency of said action in said case; that she was three times called in open court to appear, accept, demur, or answer to the plaintiff's petition, and came not, but made default." The March term of court adjourned sine die on May 15, 1897. On May 26, 1897, the defendant appeared specially, and filed a motion to set aside and vacate the judgment upon the ground that no valid service by publication of notice was ever obtained on her. The basis of this contention was an allegation, supported by affidavit, that the newspaper in which the notice was published did not have the requisite bona fide circulation to authorize it to publish legal notices. On January 24, 1898—being a day of the November, 1897, term of the court—the motion was sustained, and the judgment vacated and set aside. From this judgment of the court vacating and setting aside its former judgment, the plaintiff has brought the case on error to this court.

It will be noted that the order complained of was entered at the term subsequent to the rendition of the original judgment. Section 602 of the Code of Civil Procedure, in so far as it has any application to the question now presented, provides as follows: "A district court shall have power to vacate and modify its own judgments or orders after the term at which said judgment or order was made. * * * Second. By a new trial granted in proceedings against defendants constructively summoned as provided in section seventy-seven (77)." Section 606 is as follows: "A judgment shall not be vacated on motion or petition until it is adjudged that there is a valid defense to the action in which the judgment is rendered, or, if the plaintiff seeks its vacation, that there is a valid cause of action; and where a judgment is modified, all liens and securities obtained under it shall be preserved to the modified judgment." Section 77 provides that "service may be made by publication in either of the following cases: In actions brought against a non-resident of this state, or a foreign corporation, having in this state property or debts owing to them sought to be taken by any of the provisional remedies or to be appropriated in any way." Section 82 provides: "A party against whom a judgment or order has been rendered without other service than by publication in a newspaper, may, at any time within five years after

¶ 1. See Judgment, vol. 30, Cent. Dig. §§ 271, 293, 717.

Digitized by Google

the date of the judgment or order have the same opened and be let in to defend; before the judgment or order shall be opened, the applicant shall give notice to the adverse party of his intention to make such an application, and shall file a full answer to the petition, pay all costs, if the court require them to be paid, and make it appear to the satisfaction of the court, by affidavit, that during the pendency of the action, he had no actual notice thereof in time to appear in court and make his defense."

In support of the motion to vacate the judgment, the affidavit of the defendant was filed, disclosing that she had no notice of the pendency of the suit until after judgment was rendered, and that she had a valid defense to the claim of the plaintiff. The defendant tendered no answer to the plaintiff's claim. The motion was presented upon the theory of a special appearance for the purpose of the motion only. The judgment vacating the former judgment was based upon the finding that no legal service of summons was made upon the defendant as required by law. In Gilbert v. Marrow, 54 Neb. 77, 74 N. W. 420, it is said: "A party who seeks the vacation of a judgment after the term at which it was rendered must allege and prove that he has a valid cause of action or defense, and, to entitle him to relief, the court must adjudge that such cause of action or defense is prima facie valid." In Bond v. Wycoff, 42 Neb. 214, 60 N. W. 564, it is held: "Where judgment on default has been entered by the county court against a defendant, and which he seeks by motion to have vacated because the same was prematurely rendered, the motion must be accompanied by an answer showing a meritorious defense, either in whole or in part, to the action. If no defense is alleged, it is not error to overrule the motion to vacate the judgment." In Gilcrest v. Nantker, 47 Neb. 58, 66 N. W. 16, it is said: "This court has held, where a defendant petitions for a new trial after the term at which judgment was entered, he must plead the facts showing that his alleged defense is meritorious; otherwise his application will be defective. Gould v. Loughran, 19 Neb. 392 [27 N. W. 397]; Chicago, B. & Q. R. Co. v. Manning, 23 Neb. 552 [37 N. W. 462]; Osborn v. Gehr, 29 Neb. 661 [46 N. W. 84]; Hartford Fire Ins. Co. v. Meyer, 30 Neb. 135 [46 N. W. 292, 27 Am. St. Rep. 384]; Hughes v. Housel, 33 Neb. 703 [50 N. W. 1127]; Petalka v. Fitle, 33 Neb. 756 [51 N. W. 131]." The defendant has the undoubted right to have the judgment vacated, but, in order to avail herself of this right, she must bring herself within the rule prescribed by the statute, which not only provides the reasons for which the court may vacate and set aside a judgment rendered at a former term, but also prescribes the procedure. Brown v. Conger, 10 Neb. 239, 4 N. W. 1009; Savage v. Aiken, 14 Neb. 316, 15 N. W. 693. A party desiring to avail himself of the provisions of the statute must comply with their requirements. The defendant here has sought to avail herself of the remedy by a so-called special appearance. No answer is tendered, and no defense suggested. It follows that the learned district judge erred in setting aside the former judgment upon a special appearance and showing of the defendant.

It is therefore recommended that the judgment be reversed, and the cause remanded.

HASTINGS and KIRKPATRICK, CC., concur.

Reversed and remanded.

UNION INS. CO. OF LINCOLN v. McCULLOUGH.

(Supreme Court of Nebraska. Dec. 18, 1901.)

MARRIED WOMAN—INSURANCE ON PROPERTY—RIGHTS OF HUSBAND—APPLICATION—CONDITIONS — VACANCY OF PREMISES — DEFENSES.

1. The fact that the husband of a married woman signs, with her, an application for insurance on her separate property, does not invest him with any right or interest in the policy issued on such application, and in which the woman alone is named as the insured.

2. Where, in an application for insurance, the premises are described as in possession of a tenant, a provision in the policy that it should become void if the premises became vacant or unoccupied is not violated by such a vacancy as is occasioned by the removal of the tenant in possession to allow the entry of another tenant.

3. That an insured building was burned by a third party is no defense to an action on the policy, in the absence of a showing that the party insured was privy to such burning.

Commissioners' Opinion. Department No. 3. Error to District Court, Dawson County; Sullivan, Judge.

"Not to be officially reported."

Action by Eliza McCullough against the Union Insurance Company of Lincoln. Judgment for plaintiff. Defendant brings error. Affirmed.

Francis G. Hamer and Thos. Hamer, for plaintiff in error. H. M. Sinclair and Geo. C. Gillan, for defendant in error.

DUFFIE, C. May 22, 1897, the plaintiff in error issued to Eliza McCullough, the defendant in error, a membership certificate insuring against loss or damage by fire, lightning, cyclones, tornadoes, and windstorms, to the amount of $1,700, for the term of five years, certain farm buildings in the county of Dawson. March 4, 1898, certain of the buildings insured were destroyed by fire, and this action was commenced to recover for the loss. Among other matters alleged in the answer filed by the company, was one to the effect that at the time of the fire the buildings were vacant, in violation of the terms and conditions of the policy; and it was further al-

¶ 2. See Insurance, vol. 28, Cent. Dig. § 771.

Digitized by Google

leged that the application for the insurance was signed by Eliza McCullough and Hugh McCullough, her husband, and that any loss that might arise would go to their joint benefit; that Hugh McCullough, the husband, set fire to the buildings and caused them to be burned. A verdict was returned for the plaintiff, judgment in her favor entered thereon, and the defendant company has brought the record here for review.

It would be useless to spend any time in a discussion of the defense attempted by the company, to the effect that the plaintiff and her husband joined in the application for insurance, that the loss, if paid, would go to their joint benefit, and that the fire was caused by the husband. It is not disputed that the legal title to the property insured stood in the name of Eliza McCullough, and that the husband had no interest therein, save such as the law gives to the husband in the property of his wife. The contract of insurance was with Mrs. McCullough alone. There is no evidence to show that Mrs. McCullough knew anything of the alleged acts of her husband in causing the fire, if he did cause it, and law, reason, and justice all combine in declaring that her right should not be affected by his wrongful acts of which she had no knowledge. Complaint is made that the court erred in its statement of the issues to the jury. In its fifth instruction it said to the jury, "The loss, as pleaded in the petition, is admitted by the defendant company, and the amount of insurance upon the buildings destroyed, as claimed in the petition, is also admitted. So that the only issue in the case for you to determine is whether or not the premises were vacant at the time of the loss." It is said that this is misleading, inasmuch as there was no dispute that the buildings were actually vacant at the time of the fire, and the plaintiff in her reply, for the purpose of avoiding that defense, had set up an adjustment of the loss by the general manager of the company, who, at the time of making such adjustment, had notice that the buildings were vacant.

The plaintiff did not occupy the premises herself, and at the time the policy was issued to her they were in possession of one Radcliff, as her tenant. A day, or perhaps two days, prior to the fire, he had moved out, and one Briner, to whom plaintiff had rented the premises for that year, was about to take possession, and had, in fact, moved some of his property to the premises. Relating to this condition of affairs, the court, in its sixth instruction, said: "The plaintiff in her application for insurance declared to the company that the premises were occupied by her tenant, and the company, knowing that this was the nature of the possession, were bound to know that this tenancy was likely to change; and in this case, if you find from the evidence that the vacancy at the time of the fire was the result of, or existed only because of, a change of tenants, and the period of time during which the house had not been occupied by either of the families was not an unreasonable period under the circumstances, and that the incoming tenant had before the loss moved his farm implements, grain, feed, and farm animals onto the premises, where he was caring for the same at the time of the loss, and if he contemplated moving into the house with his family, then such vacancy was only temporary, and was not such a vacancy as to make the policy void, and you should find for the plaintiff." This instruction was warranted by the evidence in the case, and announced a correct rule of law.

In Liverpool & London & Globe Insurance Company v. Buchstaff, 38 Neb. 146, 56 N. W. 695, 41 Am. St. Rep. 724, it was said "that, where a policy of insurance provided that it should be void if the premises became vacant or unoccupied without the written consent of the company, and the tenant occupying the insured building partially moved out the day before the fire, leaving in the building a portion of his furniture, in such case the premises were not vacant or unoccupied within the meaning of the policy." In that case the court quoted with approval from Hotchkiss v. Phœnix Insurance Company, 76 Wis. 269, 11 N. W. 1106, 20 Am. St. Rep. 69, as follows: "Under certain circumstances premises may be vacant or unoccupied when, under other circumstances, premises in like situation may not be so, within the meaning of that term in insurance policies. Thus, if one insures his dwelling house, described in the policy as occupied by himself as his residence, and moves out of it, leaving no person in the occupation thereof, it thereby becomes vacant or unoccupied. But if he insures it as a tenement house, or as occupied by a tenant, it may fairly be presumed, nothing appearing to the contrary, that the parties to the contract of insurance contemplated that the tenant was liable to leave the premises, and that more or less time might elapse before the owner could procure another tenant to occupy them, and hence that the parties did not understand that they should be considered vacant and the policy forfeited or suspended, according to its terms, immediately upon the tenant's leaving it. This distinction is made in some of the cases—in Lockwood v. Middlesex Mutual Assurance Co., 47 Conn. 561; Whitney v. Black River Insurance Co., 9 Hun, 39; 1 Wood, Ins. § 91, pp. 208–210, and cases cited." In this view of the case, we do not think that there was any error on the part of the court in stating to the jury that the issue they were to try was whether the premises were vacant or not.

Complaint is also made of the allowance of an attorney's fee under the provisions of section 45, c. 43, p. 731, Comp. St. 1901, and we are asked to again examine the statute and to declare it unconstitutional. This identical question has been presented to the court, and determined against the contention of the plaintiff in error, in the following cases:

Digitized by Google

Hanover Fire Ins. Co. v. Gustin, 40 Neb. 828, 59 N. W. 375; Ins. Co. of N. A. v. Bachler, 44 Neb. 549, 62 N. W. 911; Lancashire Ins. Co. v. Bush, 60 Neb. 116, 82 N. W. 313; and we do not believe a further discussion of the question would either serve to interest the profession or to give any additional light upon the subject. We are content with the former decisions of this court, and the holding that no constitutional provision is violated in a classification of subjects for legislative action. We are unable to discover any reversible error in the record, and therefore recommend the affirmance of the judgment.

ALBERT and AMES, CC., concur.

Affirmed.

On Rehearing.

(July 22, 1902.)

DUFFIE, C. A rehearing was granted in this case on motion of the plaintiff in error, and the case has been again argued and additional briefs filed.

A careful re-examination and consideration of the case convinces us that there was no error in the judgment entered, or in the proceedings leading up thereto. We think that the former opinion should be adhered to, and so recommend.

AMES and ALBERT, CC., concur.

Affirmed.

STATE ex rel. RAILROAD AND WAREHOUSE COMMISSION v. NORTHERN PAC. RY. CO.

(Supreme Court of Minnesota. July 24, 1903.)

RAILROADS—STATIONS—REMOVAL—RE-ESTABLISHMENT.

In an application for mandamus, upon the petition of the Railroad and Warehouse Commission to re-establish a station which had been removed by defendant from a point on its line of road, which removal greatly diminishes the facilities for public use, and is not in compliance with the usual statutory requirements for the maintenance of a railway station, *held*:

1. That the superior convenience of a railroad company in the operation of its line of road is not the sole consideration in the establishment or change of station facilities.

2. That the rights of the public, which have become affected, by the use of a railway station, to such an extent that substantial interference therewith would be a disadvantage to the patrons of the company, is an important question, which should not be disregarded.

3. That the question solely of expense in the operation of a station, or the diminution of profits secured therefrom, will not justify the removal or change of a station, if public rights are affected.

4. Facts in this case considered, and *held* to justify an order of the Railroad and Warehouse Commission requiring the defendant to re-establish a railway station at Bluffton, a village having a population of 100 inhabitants, a general store, with other industries incident to a farming community, which has for more than 15 years depended upon the station for railway facilities and located highways with reference thereto.

(Syllabus by the Court.)

Appeal from District Court, Otter Tail County; L. L. Baxter and D. B. Searle, Judges.

Application by the state, on the relation of the Railroad and Warehouse Commission, for a writ of mandamus to the Northern Pacific Railway Company. Judgment for relator, and defendant appeals. Affirmed.

C. W. Bunn and Emerson Hadley, for appellant. W. B. Douglas, Atty. Gen., and W. J. Donahower, Asst. Atty. Gen., for respondent.

LOVELY, J. Mandamus, upon the petition of the State Railroad and Warehouse Commission, to compel the establishment of Bluffton Station, on defendant's road. The order to locate the station was not complied with, and is now sought to be enforced in these proceedings. Upon the issue joined by defendant's answer the cause was tried to the district court, who made findings of fact upon which the relief demanded was granted. Judgment was entered, from which the railway company appeals.

The material facts determinative of this appeal can hardly be said to be involved in dispute. In 1885 the defendant had located a station at Bluffton, which became and remained a place of considerable importance until 1896, there being at the place a good water power, mills, and general stores, many of which have not been operated since the latter date; its business has materially declined in importance; but defendant continued to maintain its station until the 14th of April, 1901, when it moved the depot building to a point on its road three miles east, where it newly located, and now maintains, a station (with an agent) which was named Dopelius. In place of the building so removed, defendant erected on the site of the former station a much smaller wooden structure of 12x16 feet in dimensions, furnished it with a settee and stove, but has not maintained an agent there, nor stopped local trains only one day in the week, except when flagged to take on passengers or to discharge those who are desirous of getting off. A local freight train stops there on flag two days of each week.

Whether the traffic at Bluffton Station previous to 1895 was lucrative and profitable the record does not disclose, but since 1895, until the station was discontinued, defendant's business did not in the aggregate more than pay half the expense of maintaining the station, and the population had been reduced to 17 families, numbering about 100 persons. There was, however, at the time of the order of the commission, a general store, creamery, and other small industries which are incident to the necessities of the surrounding farming community, although a

Digitized by Google

new general store and other buildings were being constructed. At the time when the business of the station was most profitable to defendant, the principal industry was cutting timber and manufacturing lumber, but, owing to the changes in the settlement of the surrounding country, this business has very substantially declined. In place of the lumbering industries, many persons have settled and opened farms in the immediate vicinity, whose interests depend upon the station facilities furnished, and have been provided for by the laying out of roads and highways on the north and south of the station, which converge at that point and have become tributary to the same.

The newly established station of Dopelius has only one store, operated by defendant's agent, which was moved by him from Bluffton to Dopelius at the time of the change, and it does not appear that any new highways have been laid out or run to that point to accommodate the adjacent country, nor does it appear that the farming community, if there is any in the vicinity, would be benefited by the new location. In this respect we are bound, in deference to the conclusions reached by the commission and the trial court, to adopt the view that a very considerable tract of farming country, inhabited and utilized for agricultural purposes by over 100 families, is mainly dependent for railroad connections upon the continuance of the former station, and that the change adopted by the defendant would require entirely new arrangements of highways to practically reach a railway station for their accommodation, which would compel the former patrons of Bluffton, who had occupied their farms, built residences thereon, and laid out roads in reliance upon the previous facilities furnished by defendant, to travel a much greater distance than before to obtain them. It also reasonably appears from the evidence that the diminution in the business of Bluffton has ceased, and it has been regaining business importance to a considerable extent. It is not apparent from the record that the defendant solicited leave from the commission to make the change it adopted, and we are required to assume that it did not do so. Defendant's reasons for the change rest entirely upon its convenience in operating its railway. The former station of Bluffton was located near the foot of a 1 per cent. grade descending for the distance of half a mile to the west and to a slighter extent from the east, it being claimed that it is more advantageous in the management of its trains to have a station and operator at a point where all trains can be stopped without difficulty from stalling, which would be much better secured at Dopelius than at Bluffton; but it does not appear that the local trains which were formerly stopped at Bluffton on regular schedule time are retarded or prevented from doing so by this difficulty. The heavy through trains had not previously stopped at Bluffton, and would not be required to do so by the continuance of the station there; neither is it, nor could it well be, within the purview of the order to require the defendant to abandon facilities for the stoppage of trains at Dopelius, or for the passage of other trains, and the giving of telegraphic orders at that point; so that, if it should be for its advantage to adopt that course, the practical question involved is whether the convenience of the railway itself can be made the primary and decisive condition upon which the abandonment of the station must depend, and to what extent the interests of the public tributary to the road should affect its action in that respect.

It would seem to be now well settled, upon principles of public policy, that the decisive question in such a case should not be the convenience and benefit of railway companies alone. They undoubtedly have a right to consider their own profit and convenience largely, but also owe duties to the public, for which reasons they have been permitted to establish their roads, and enjoy many substantial privileges depending upon benefits which will accrue to patrons adjacent to their lines, and incidental to the obligations thus imposed must be the duty to treat the public fairly, and furnish them with reasonable facilities to enjoy the benefits they confer; hence the discontinuance of an established railway station which their patrons have been permitted to use for years, upon the faith of whose location the people of a village and the surrounding country have depended, cannot be determined solely by the consideration whether a railway station is profitable to the road, nor upon its convenience and the adaptation of its affairs to the increased advantages and methods of transacting its business, nor by the test whether the continuance of a station will require it to incur increased expense. This wholesome conclusion is supported by authority, and is founded upon equity and reasonable grounds of general utility. Railway Com'rs v. Portland, etc., Ry. Co., 63 Me. 269, 18 Am. Rep. 208; People v. L. & N. R. R. Co., 120 Ill. 48, 10 N. E. 657; People v. C. & A. Ry. Co., 130 Ill. 175, 22 N. E. 857; Mobile, etc., R. R. Co. v. People, 132 Ill. 559, 24 N. E. 643, 22 Am. St. Rep. 556; State v. Sioux City & P. R. Co., 7 Neb. 357; Gladson v. State, 166 U. S. 427, 17 Sup. Ct. 627, 41 L. Ed. 1064.

It is insisted that the decision in State ex rel. Comm. v. M. & St. L. Ry. Co., 76 Minn. 469, 79 N. W. 510, requires a reversal of the judgment in this case, but we do not so understand the result therein reached. In that case this court set aside the order establishing a station at Emmons, principally upon the ground that at a point one mile distant on the line of the same railroad there was another fully equipped station furnishing facilities to the inhabitants of Emmons, who might avail themselves of the same, and it was regarded as a needless imposition up-

Digitized by Google

on the railway company to require two new stations to be established so near to each other. Again, this is a case of an established station which the action of the railroad company itself had determined to be a necessity, and in the Emmons case a new station was to be located; but here defendant led the public to act upon their faith in the continuance of the station, and to some extent it would seem as if, when defendant by its own action has determined that a station needed for the convenience of the public should be located, and is maintained for a considerable time, it ought not, after long continuance and use, to deprive those benefited thereby of the same, or supply its place by such diminished facilities as fail to comply with the statutory requirements in that respect.

Judgment affirmed.

FRUIT DISPATCH CO. v. MURRAY et al.

(Supreme Court of Minnesota. July 24, 1903.)

EXPERT EVIDENCE—ADMISSIBILITY—INSTRUCTIONS—ACTION FOR PRICE—COUNTERCLAIM.

1. Whether bananas transported from Southern points to St. Paul would decay during the journey, and to what extent, is a matter of peculiar and special knowledge among persons engaged in the business of dealing in tropical fruit, and is a proper subject for expert or opinion evidence.

2. Certain questions directed to a person qualified to testify as to the effect of the climate on bananas in their transportation considered, and *held* properly allowed, and the answers given within the rules governing the subject of opinion evidence.

3. The charge of the court must be considered on review, not only in all its parts but as a whole; and an omission to state the entire law in one instruction is not error if the omission is reasonably supplied elsewhere and the jury is not misled.

4. Evidence considered, and *held* reasonably to support the verdict rendered for defendants upon the counterclaim set forth in the answer.

(Syllabus by the Court.)

Appeal from District Court, Ramsey County; Hascal R. Brill, Judge.

Action by Fruit Dispatch Company against William A. Murray and Fred L. Graupman. Verdict for defendants, and plaintiff appeals from a motion denying a new trial. Affirmed.

Walter L. Chapin, for appellant. C. D. & Thos. D. O'Brien, for respondents.

LOVELY, J. Action to recover the contract price of a car load of bananas shipped to defendants at St. Paul from Mobile, which was refused. Affirmative damages were also sought by defendants for the alleged failure of plaintiff to fulfill an agreement to make good defects on previous consignments. The cause was tried to a jury, who returned a verdict for defendants in a substantial sum. After denial of a motion for a new trial, plaintiff appeals.

The complaint demands a recovery for the purchase price of one car of fruit shipped from Mobile in August, 1901, alleging that it was delivered to defendants at that place at their risk. In their answer defendants claim that the place of delivery was St. Paul, and that the sale was dependent on the arrival of the bananas at the point of delivery in green and merchantable condition; that the fruit did not comply with the contract in this respect, but was badly decayed, and was refused when it reached its destination. A counterclaim was interposed to recover money already paid plaintiff on three other car loads of bananas which had been forwarded to defendants—two from New Orleans and one from Mobile—during the previous month of June, which were not in good marketable condition when shipped or on arrival; that, according to an agreement then made between the parties, defendants should take the fruit in each case, pay the purchase price therefor, and plaintiff would thereafter refund the difference between the amount paid, with freight, and the sum defendants should realize by sale thereof, which was assented to and acted upon by the defendants, the amount of the difference being set forth. The reply states that all the cars were delivered at the point of shipment, but denies the agreement alleged in the counterclaim; also asserts that the fruit was of good quality when shipped.

Plaintiff insists that the evidence conclusively shows that, under the agreement actually made, the several car loads of bananas shipped from the Southern points where they were received from Central America were in good condition; that, while messengers were sent with the fruit, the points of delivery were the places of shipment where the three cars were received by the defendants at their risk, "free on board" the cars; that they accepted the same and paid for those received; also, that none of them were accepted upon the conditions set forth in the counterclaim.

While the testimony very strongly tends to support plaintiff's claim in these respects, there was likewise evidence reasonably tending to establish the facts upon which defendants sought to support their justification in refusing to accept the August shipment, on which the suit was brought, as well as to establish the agreement between the agent of plaintiff that the fruit in the several cars then and previously forwarded should be delivered at St. Paul. The testimony of plaintiff's employés at the points of shipment would undoubtedly, if credited, have shown that it was in good condition when loaded on the cars, but there was evidence on the part of defendants, taken in connection with testimony of witnesses reasonably tending to show the character of the fruit during its transportation, that made it a question of fact whether, when shipped, it was of suitable condition to comply with the terms of the sale according to defendants' claim.

A careful examination of all the evidence has led us to the conclusion, with reference to the issues thus contested, that except as

Digitized by Google

to one car load included in the counterclaim, which was under the rulings of the court held to have been accepted, the issuable questions presented by the pleadings were for the jury.

In two assignments plaintiff challenges the allowance of certain expert or opinion evidence, and has presented a somewhat extended argument to demonstrate that it was prejudiced thereby. We have examined these alleged errors with much care, and do not consider it necessary to follow the contention of plaintiff's counsel in this respect further than to say that we deem the questions thus raised require no further notice than upon the consideration whether testimony of witnesses at St. Paul, who knew nothing of the condition of the fruit when loaded, was proper to show, from its appearance on arrival of the same at that place, that it was not in proper and marketable condition when put on the cars. Several of plaintiff's witnesses whose testimony was taken by deposition state positively that the fruit was in good condition when shipped; the messengers' evidence was given of its condition during transit; and a witness properly qualified was allowed, under objection, to state the effect of putting a bunch of defective bananas in a car with good ones, and also whether, in his opinion, based upon the appearance of the fruit upon arrival at its destination, it was in proper condition when loaded. While certain other facts might have been shown upon which to base his answers, we think the foundation was properly laid for this evidence. This, of course, was essential, but did not require an accurate knowledge of every detail of the condition of the fruit at shipment or during transportation, but only such information as would justify an opinion from a person having peculiar and special information on the subject not within the common knowledge. The effect of the weather at the time of shipment upon this kind of fruit, the time of the journey, was generally shown, and the results dependent thereon might well be within the peculiar capacity for the judgment of skilled fruit dealers; and while, in this as in all cases where opinions are received, its effect is a subject of criticism, it was for the ultimate determination of the jury. Shriver v. Sioux City & St. P. R. Co., 24 Minn. 506, 31 Am. Rep. 353; State v. Boyd, 36 Minn. 538, 32 N. W. 780; Stewart v. Cannon, 66 Minn. 64, 68 N. W. 604.

While a critical examination of the questions objected to indicates that they might have been more carefully framed, they substantially comply with legal requirements. Besides, the discretion of the court, which to some extent controls in such matters, was not exceeded in the reception of the answers.

We are unable to adopt the claim urged for plaintiff that the testimony of the employés of plaintiff of the character of the fruit when put on the cars was conclusive, and could not be contested by properly quali fied witnesses as to its condition when i reached St. Paul.

The plaintiff further criticises an instruc tion to the jury by the trial court wherein referring to the counterclaim, it was substan tially stated that when the several car load arrived at St. Paul, if found to be in ba condition, defendants, as claimed, were in duced to take them by plaintiff, when dam ages would thereafter be adjusted. The ob jection to this instruction is that there wa not prefaced to this statement the qualifica tion that the right of the defendants to re cover must depend upon a finding that th agreement with the plaintiff was previousl made. The court had both before and afte this instruction stated in no unmistakabl terms that defendants could not establis any rights under the counterclaim unles such an agreement had been made, and th failure to repeat this statement could hardl be considered necessary for the understan ing by the jury of the issues presented, for cannot be required in every statement the legal elements of an issue that the tri court should preface each with all the cond tions upon which it depends. Such a cours would often involve instructions in obscur ty, and mislead, instead of enlighten, th jury. The whole charge correctly stated th law applicable to every question in the cas and it cannot be demanded that the enti law should be reiterated in each paragrap Peterson v. C., M. & St. P. Ry. Co., 38 Min 511, 39 N. W. 485; McKnight v. C., M. St. P. Ry. Co., 44 Minn. 141, 46 N. W. 29 Torske v. Commonwealth Lumber Co., Minn. 276, 90 N. W. 532.

A careful examination of the entire reco has led us to the conclusion that the verdi was not against the weight of evidence, a that the charge of the trial court was n misleading.

The order appealed from is affirmed.

BOARDMAN et al. v. HOWARD et al.

(Supreme Court of Minnesota. July 17, 1903

LEASE—CONSTRUCTION—LOSS BY FIRE.

1. Under a lease, by the terms of which t tenant is required to return the premises in good condition as received, except where da aged by fire, etc., this condition, which relat to the building, forbids the tenant to leave the on his own distinguishable property, which h been injured and made worthless by a fi where the tenancy had been terminated agreement of the parties.

(Syllabus by the Court.)

Appeal from District Court, Ramsey Cou ty; Lewis, Judge.

Action by Caroline E. Boardman and ot ers against Frederick Howard and other Verdict for plaintiffs. From an order den ing a new trial, defendants appeal. A firmed.

Stevens, O'Brien, Cole & Albrecht, for a pellants. Henry C. James, for respondent

Digitized by Google

LOVELY, J. This is an action to recover unpaid rent; also, for expenses of the landlord incurred in removing property damaged by fire and left on the premises by the tenant after surrendering the same. The cause was tried to the court, who made findings of fact, and held as a conclusion of law that plaintiffs were entitled to recover a portion of one month's rent; also, a specific sum for expenses incurred by the landlord in taking away injured goods of defendants after they had quit. This appeal is from an order denying a new trial.

The following facts are embraced in the findings of the court and are supported by the evidence: Plaintiffs leased a building in the city of St. Paul to defendants for three years from January 1, 1901, at a stipulated monthly rental. The tenants took possession, and occupied it for the storage and sale of household furniture. On the 19th of November following, the premises became untenantable by reason of a fire occurring without fault of either party. On the succeeding 1st of December, plaintiffs entered without opposition by defendants, and engaged in repairs to make the place serviceable for reoccupation. During the month, defendants were permitted to take out their damaged property, and continued to do so until the 1st of the next January, when they informed plaintiffs that they had entirely removed therefrom and surrendered the premises. After the building was given up by the tenants, there still remained therein a large quantity of injured furniture and rubbish of no value, but distinguishable as having been a part of defendants' stock. This worthless material was removed by the plaintiffs at their own expense, to facilitate repairs and their future use of the premises. The court found the reasonable amount of this expense, and that defendants were liable therefor.

By the terms of the written lease it was provided that upon its expiration, or when terminated by forfeiture or otherwise, the tenants would "yield up the premises in as good condition as when the same were entered, * * * loss by fire, inevitable accident, or ordinary wear excepted." There are other provisions in the lease relative to the surrender of the premises upon notice, as well as for the removal of offal and garbage, which were discussed on the argument; but under the view we have adopted these portions of the rental contract do not affect the result, and need not be considered. There is no controversy over the amount found to be due as unpaid rental for a part of the month of November, but it is insisted that, after defendants had removed the portion of their stock which they took away in December, they might without breach of duty allow a considerable portion to remain upon the surrender of the building. A reasonable construction of the facts found by the trial court authorizes the view that the relations between the landlord and tenants were actually terminated by agreement on the 1st of December, when the landlord, desiring to take possession of his property to make repairs, entered on that day, and that the tenants were licensed by the landlord thereafter to be there for the purpose of taking away their property, and continued to do so until it became apparent that the débris and rubbish resulting from the partial destruction of the injured furniture which had been their property was valueless, when they ceased to remove it, but left it in the building, thus imposing upon the landlord this burden.

We have no doubt that the provision in the lease for the surrender of the premises by the tenants in as good condition as when received applies to the building itself. The exception relating to injury of the building by fire, while it would excuse the tenants from repairing or rebuilding, would not justify them in imposing burdens upon the landlord arising strictly from the tenants' occupancy and use of the premises; hence the injury by fire to the goods of defendants was a misfortune they had to assume themselves. A part of this was the injury to the furniture still belonging to them, and which, under the terms of the lease as well as upon reasonable considerations of justice, it was their duty, rather than the landlord's, to remove. It would follow that the tenants, under the privilege to take away their goods, could not enjoy it so far as beneficial, and leave a part of their damaged property in the building to incumber plaintiffs' possession, and the expenses incurred by the landlord in removing the rubbish which defendants left and declined to take away is a legal obligation against them.

Order affirmed.

HUNT v. HAUSER MALTING CO.

(Supreme Court of Minnesota. July 24, 1903.)

UNITED STATES SUPREME COURT—FORCE OF DECISIONS — CONSTRUCTION — NATIONAL BANKS—STOCKHOLDERS' LIABILITY—CORPORATIONS—POWERS.

1. While a state court is bound by the decisions of the United States Supreme Court as to the powers of national banks, the application of such decisions to a state bank, in a case brought in the state courts, is to be determined by state decisions.

2. Where a corporation of this state, organized for the manufacture of malt, as well as to buy and sell grain and brewing implements, purchased bank stock and held the same a number of years as an investment for profit, its acts in this respect were unlawful and beyond the authority of the power conferred upon it by its articles of incorporation.

3. But, after having received dividends for a number of years upon its stock investment with the knowledge of all the stockholders, the malting company is estopped from asserting its ultra vires acts, in purchasing the stock, in a suit to recover a stockholder's liability under

¶ 3. See Corporations, vol. 12, Cent. Dig. § 1557.

Digitized by Google

chapter 272, p. 315, Laws 1899, brought by the receiver of a bank which had become insolvent.

(Syllabus by the Court.)

Appeal from District Court, Ramsey County; Brill, Judge.

Action by William F. Hunt, receiver of the Allemania Bank, against the Hauser Malting Company. From an order sustaining a demurrer to the complaint, plaintiff appeals. Reversed.

James E. Trask, for appellant. Stevens, O'Brien, Cole & Albrecht, for respondent.

LOVELY, J. This appeal is from an order sustaining a demurrer to the complaint in an action brought by the receiver of the insolvent Allemania Bank under the statute (Laws 1899, p. 315, c. 272). The plaintiff alleged that defendant was a corporation, the general nature of whose business was "the manufacture and sale of malt, buying and selling hops, barley, and other grains * * * and dealing in * * * the utensils, apparatus, implements, articles, and materials used by brewers in equipping and operating breweries and * * * brewery supplies."

Defendant demurred upon the ground that the complaint did not state facts sufficient to constitute a cause of action, which was sustained upon the authority of California National Bank v. Kennedy, 167 U. S. 362, 17 Sup. Ct. 831, 42 L. Ed. 198. In this case the Supreme Court of the United States reversed the decision of the Supreme Court of California in Kennedy v. Cal. Sav. Bank, 101 Cal. 495, 35 Pac. 1039, 40 Am. St. Rep. 69. The state court held that the California National Bank was estopped to assert the doctrine of ultra vires in its favor when sought to be charged as a stockholder in the California Savings Bank, because it not only purchased and held its stock but had received dividends thereon. Upon a review of the decision of the state court, the federal tribunal of last resort decided that an investment in the stock of another banking concern was beyond its power and unauthorized, and that the participation in the benefits derived therefrom did not prohibit the purchaser from asserting immunity from liability as a stockholder. While an effort was made on the argument of this case to distinguish the decision in the federal tribunal from the case at bar, we agree with the learned trial court that it is not easy to do so; but we are not prepared to hold that we are bound to follow the rule laid down in Cal. Nat. Bank v. Kennedy, supra, without reference to our own decisions or those of other respectable courts which have adopted a contrary view; for, as was recently very pertinently said by the Supreme Court of Wisconsin in passing upon the question here involved, in considering the diversity of opinion between its own decision and the rule in the Kennedy Case: "This court would unquestionably be bound to follow the holding of the Supreme Court of the United States as to the powers of national banks—this is strictly a federal question—but on the other hand, upon the question of the effect or application of such holding as a defense in a given case properly brought in the state courts, this court may properly follow its own decision, even when differing from the decision of the federal court. Such questions are not federal questions." Security Bank v. St. Croix Power Co (Wis.) 94 N. W. 74.

It is not disputed in this case that under the articles incorporating defendant it was not authorized to purchase or deal in the stock of the Allemania Bank, although it was conceded that but for this violation of its chartered obligations by defendant the stockholders' assessment was properly made and that a private person would have been responsible upon the statutory liability under the facts set forth in the complaint. It is within the allegations of the challenged pleading admitted by the demurrer that the Allemania Bank stock was purchased by defendant in 1890, and during a subsequent period of 13 years prior to the commencement of this action defendant treated it as an investment, and held it as its property, upon the expectation of benefits to be derived from such holding. during which time it remained on the books of the bank as a part of its assets, with the knowledge and consent of all its stockholders. It also appears from the complaint that six semiannual dividends were paid the defendant before the Allemania Bank became insolvent, which were retained, thereby diminishing the corporate property of the bank, which otherwise might have been appropriated in liquidation of claims against it, though defendant now seeks to assert its own illegal acts to relieve itself from the responsibility which the law in express terms imposes upon all stockholders.

It would follow, where the illegal act is not inherently wrong, though malum prohibitum, that, unless upon no just or equitable consideration should defendant be estopped from asserting its misconduct in violating its charter duties when the rights of third parties and the public intervene or become affected thereby, the strongest reasons which equity and conscience would suggest should prevent it, after availing itself of the substantial advantages it had derived from its investment, by repudiating the liability sought to be imposed.

Assuming, as we must, that the defendant had no right to purchase the stock, it was open to the stockholders to repudiate such action when they heard of it, or for the state to interfere; but under the allegations of the complaint these acts were adopted and ratified by defendant's officers and stockholders and we are unable to find any good argument resting upon just considerations of fair pla

Digitized by Google

and common honesty, which should relieve it from the burdens it would have incurred but for its own wrongful conduct. It was held by this court in an early case that a corporation is a being created by law, and has properly no authority but such as is conferred upon it, expressly or by implication, by the law of its creation, yet it may become legally bound to observe and perform contracts which it had no authority to enter into. The ends of justice may require, as in this case, that the corporation which has exceeded its powers should be estopped by its own acts from pleading, in defense of its assumed obligations, that they were ultra vires. Auerbach v. Le Sueur Mill Co., 28 Minn. 297, 9 N. W. 799, 41 Am. Rep. 285. This view is further recognized and enforced in subsequent cases in this court, which would seem to justify the claim of the receiver in his attempt to apply the rule of estoppel against the attempt of defendant to relieve itself of the liability sought to be enforced in this action. Central B. & L. Ass'n v. Lampson, 60 Minn. 422, 62 N. W. 544; Erb v. Yoerg, 64 Minn. 465, 67 N. W. 355; City of Fergus Falls v. Fergus Falls Hotel, 80 Minn. 165, 83 N. W. 54.

We therefore deem it our duty to hold upon the facts well pleaded in the complaint in this action, which are admitted by the demurrer, that the defendant must be held to be estopped from denying its statutory liability to contribute to the liquidation of the debt of the insolvent bank upon the distinctive ground that it could not avail itself of the advantages which it derived thereby, and, when the day of misfortune arrived, shirk the responsibility which it voluntarily assumed. To allow it to do so would seem to encourage the execution of a fraud and sanction a wrong opposed to the well-considered adjudications of this court and the highest behests of natural justice.

The decisions are not in harmony upon the views we are compelled to adopt, and, after a careful examination of the grounds upon which the decision in Cal. National Bank v. Kennedy, 167 U. S. 362, 17 Sup. Ct. 831, 42 L. Ed. 198, are predicated, we are constrained to adhere to our own settled policy upon the subject, which is supported by authorities of the highest weight and respectability. Kennedy v. Cal. Sav. Bank, supra; Security Bank v. St. Croix Power Co. (Wis.) 94 N. W. 74; Bradley v. Ballard, 55 Ill. 413, 7 Am. Rep. 656; Beecher v. Rolling Mills, 45 Mich. 103, 7 N. W. 695; Whitney Arms Co. v. Barlow, 63 N. Y. 69, 20 Am. Rep. 504; Camden v. May's Landing, 48 N. J. Law, 530, 7 Atl. 523; Rich v. State National Bank, 7 Neb. 201, 29 Am. Rep. 382; Sherman Center Town Co. v. Swigart, 43 Kan. 292, 23 Pac. 569, 19 Am. St. Rep. 137; Manchester & L. R. R. Co. v. Concord R. R. Co., 66 N. H. 100, 20 Atl. 383, 9 L. R. A. 689, 49 Am. St. Rep. 582; National Bank v. Porter, 125 Mass. 335, 28 Am. Rep. 235; Tourtelot v. Whithed (Mo.) 84 N. W. 8; Matt v. Roman Catholic Mut. Prot. Soc., 70 Iowa, 455, 30 N. W. 799; Flint and W. Mfg. Co. v. Kerr-Murray Mfg. Co., 24 Ind. App. 350, 56 N. E. 858.

Order overruling demurrer is reversed, and cause remanded.

INTERNATIONAL HARVESTER CO. OF AMERICA v. LYMAN.

(Supreme Court of Minnesota. July 17, 1903.)

BANKRUPTCY—DISCHARGE—NEW PROMISE—REMOVAL OF DEBT.

1. To revive a debt which has been discharged in bankruptcy, a conditional promise thereafter to pay the original obligation in installments must be accepted by the creditor.

2. Where, after such discharge, in response to an offer by the debtor to pay the original obligation in installments, the creditor expressly declines to assent to the conditions, and insists upon payment of the whole amount, the debt is not revived.

(Syllabus by the Court.)

Appeal from District Court, Hennepin County; C. B. Elliott, Judge.

Action by the International Harvester Company of America against Frank J. Lyman. Judgment for defendant, and plaintiff appeals. Affirmed.

Brown & Kerr, for appellant. Arthur M. Higgins, for respondent.

LOVELY, J. Action on a promissory note, from which defendant had been relieved by a discharge in bankruptcy. Subsequent thereto it is claimed a new promise revived the original obligation. The cause was tried to the court, who made findings and ordered judgment for the defendant, which was entered. Plaintiff appeals.

Upon this review we are required to adopt the conclusions of the trial court that defendant became legally indebted to plaintiff upon a promissory note, but was relieved therefrom by a valid discharge in bankruptcy. After such discharge the authorized representative of the owner of the note wrote defendant August 22, 1902, demanding payment. In response, defendant answered by letter, the material portion of which we here quote: "Yours received and contents noted. On the 10th of September I will send you $50.00 and after that will make payments until our estate is settled in full, then your business will all be squared up." Three days later the recipient of this letter replied: "I am in receipt of yours of the 22nd, replying to mine of recent date, and desire to say that I do not feel that you are treating us fairly, and furthermore we will not be satisfied with your paying $50.00 next month, and further payments from month to month until the indebtedness is paid. If we were to accept your proposition it would take seven months for you to pay the balance that is due on your note, and we do not feel that we can wait that long," etc.

Plaintiff necessarily rests its right to recover upon this portion of the correspond-

Digitized by Google

ence, upon the ground that the moral obligation to pay the discharged debt was a sufficient consideration for the new promise in defendant's letter of August 22d. That this would be a sufficient consideration to revive the debt is undoubtedly true. We have already held that a definite promise by a debtor is sufficient to revive the obligation after a discharge in bankruptcy; also, that the form of language employed is not important if the purpose to assume the debt is clear and unequivocal. But where such promise is coupled with any conditions as to time or ability to pay, the fulfillment of such conditions must be shown. Smith v. Stanchfield, 84 Minn. 343, 87 N. W. 917.

While, by the terms of defendant's letter, the promise to make payments by installments may be regarded as sufficiently explicit, it is clearly inferable therefrom that it is conditioned upon its acceptance if satisfactory. Had the holder of the note, after receipt of this letter, relied upon the same without answering, an acceptance of those conditions would probably be implied; but the reply of October 25th expressly declined to accept the proposed terms of payment of the debt in installments, and it must be held that this refusal to acquiesce in defendant's proposition was a repudiation of the new promise, and did not revive the original obligation.

Judgment affirmed.

JONES et al. v. JONES et al.

(Supreme Court of South Dakota. July 22, 1903.)

NEW TRIAL—DISCRETION OF COURT.

1. In an action against defendants by their lessees to recover for the conversion of crops grown on the property under a lease giving defendants title to all the crops until a division was had according to the lease, a verdict was directed for defendants on the theory that the action should have been in equity for an accounting. Before any question had been raised as to the form of the action, it had been clearly shown that plaintiffs were entitled to relief in some form. *Held* not an abuse of discretion to grant a new trial.

Appeal from Circuit Court, Minnehaha County.

Action by Delwin A. Jones and another against Wilson S. Jones and another. Verdict for defendants, and from an order granting a new trial defendants appeal. Affirmed.

R. W. Parliman, for appellants. Davis, Lyon & Gates, for respondents.

FULLER, J. For the purposes of this appeal from an order granting a new trial, we shall assume, as urged by counsel for appellants, that the complaint states a cause of action for damages sustained by the wrongful conversion of respondents' undivided one-half interest in certain crops raised upon the farm of appellants, pursuant to a contract which gave them "the title and possession of all hay, grain, crops and produce raised, grown or produced on said premises" until a division thereof according to a stipulation contained in the lease by which respondents were to occupy the premises and have one-half of everything they could produce during the season of 1900. It was conclusively shown by the undisputed evidence, admitted without objection, that, notwithstanding respondents occupied the premises under the lease and faithfully complied with all its terms, they were wrongfully ejected by appellants and absolutely deprived of all their interest in the crops. Although it was clearly shown and undisputed that appellants, in violation of their contract, had appropriated to their own use respondents' one-half interest in 4,000 bushels of corn worth 25 cents per bushel, 1,200 bushels of oats worth 20 cents per bushel, 40 tons of hay worth $5 per ton, and 40 loads of straw worth $1.50 per load, no damages were allowed in the way of compensation, and a verdict was directed against respondents upon the theory that the action should have been in equity for an accounting.

As a general proposition, one having the possession and right of possession cannot be guilty of conversion by retaining it, yet under our reformed system the court may administer relief, legal or equitable, as required by the facts before it, regardless of the form of action. Before any question was raised as to the form in which the action was brought, it was clearly shown by the undisputed testimony that respondents had been injured by the wrongful act of appellants, and upon the facts were entitled to relief in some form. If the action of the trial court, in directing the verdict, caused a failure of justice, the new trial was properly granted, although it may be necessary to file an amended complaint. An order granting a new trial is clearly within the exercise of judicial discretion, and will not be disturbed unless there is manifest abuse of that discretion. Hodges v. Bierlein, 4 S. D. 258, 56 N. W. 811; Alt v. Chi. & N. W. Ry. Co., 5 S. D. 20, 57 N. W. 1126; C. Gotzian & Co. v. McCollum, 8 S. D. 186, 65 N. W. 1068.

The record before us discloses no abuse of discretion on the part of the court below, and the order granting a new trial is affirmed.

HUSTON v. SIOUX FALLS TP.

(Supreme Court of South Dakota. July 22, 1903.)

TOWNS—TOWNSHIP SUPERVISORS—POWERS—CREATING INDEBTEDNESS.

1. It was not competent for the board of township supervisors, or for a member thereof, to enter into a contract with plaintiff for the repair of a road, whereby a debt would be created on the part of the town.

Digitized by Google

2. The fact that a town received the benefit of plaintiff's labor under an unauthorized contract was immaterial.

Appeal from County Court, Minnehaha County.

Action by Frank E. Huston against Sioux Falls township, a corporation. Judgment for defendant. Plaintiff appeals. Affirmed.

R. W. Parliman, for appellant. R. J. Wells, for respondent.

CORSON, J. This is an appeal from a judgment entered in the county court of Minnehaha county upon the findings of fact and conclusions of law made by a referee. The action was brought by the plaintiff to recover the sum of $104.30 for service of himself and team in repairing a road in the defendant township. The referee found in substance that the plaintiff, in the months of April, May, and June, 1900, performed the labor claimed to have been performed by him upon the highway in the defendant township, "pursuant to a contract with one Frank Ford, who, in making such contract, assumed to act as one of the supervisors of the said township, and to make said contract with the plaintiff on behalf of the said township." The referee further finds that there was no money in the hands of the treasurer of the said township belonging to the highway fund at the time of the making of the alleged contract and the performance of the labor, except money that had been raised for a specific purpose, which purpose did not include the labor performed by the plaintiff; that the county treasurer collected and paid over to the township treasurer on February 26, 1901, on account of the 5-mill levy on the assessed valuation of the property of the defendant township for the year 1900, the sum of $603.89, of which about the sum of $200 was money for taxes on property in the said district No. 2. From the findings of fact the referee concludes "that, there being no money in the hands of the township treasurer at the time of the making of the contract set forth in the findings * * * belonging to the general highway or road fund, said contract was in excess of the power conferred by law upon the township supervisors, and void, and that the defendant is entitled to a judgment that the complaint of the plaintiff be dismissed."

The powers of such board being limited, it was not competent for it or a member thereof to enter into a contract with the plaintiff by which a debt would be created on the part of the town. It will be noticed that the referee found that at the time Ford, as a member of the board, entered into the contract with the plaintiff, there were no funds in the town treasury applicable to payment for this work, and it does not appear that any funds were in the hands of the treasurer that might be applied in the payment of the sum due this plaintiff until in February, 1901, nearly a year after the contract was entered into. In Aldrich v. Collins, 3 S. D. 154, 52 N. W. 854, this court made an exhaustive examination of the powers and duties of supervisors, and in Austin Mfg. Co. v. Twin Brooks Twp. (S. D.) 91 N. W. 470, again reviewed the question, and we do not therefore deem it necessary to further discuss the question in this opinion. The referee and the county court were clearly right in holding that the town supervisors were not authorized to enter into the contract with the plaintiff, and that such contract was void as against the town.

It is contended by the appellant that, as the town received the benefit of the plaintiff's labor, it ought in justice to be compelled to pay for the same. But such a rule would enable town supervisors to impose upon their towns an indefinite amount of indebtedness, which it was the intention of the law to avoid, as it is provided by the statute that no indebtedness shall be incurred by the township board except upon a two-thirds vote of the electors at a regularly called or special meeting thereof.

It will be noticed that there is no finding of the referee, nor evidence, of any valid contract between the township board and the plaintiff. Ford, as a member of the board, was not authorized to make a contract binding the town.

The judgment of the county court is affirmed.

GARRIGAN v. KENNEDY et al.

(Supreme Court of South Dakota. July 22, 1903.)

APPEAL AND ERROR—PARTIES—NOTICE OF APPEAL—BOND—SUFFICIENCY—DISMISSAL.

1. Where, in an action against three defendants, one of them did not answer or appear, and no verdict or judgment was taken against him, and a notice of appeal from the judgment against the other two defendants was signed by the attorneys for such defendants, naming them, plaintiff was thereby notified that the appeal was taken only by such defendants, though the name of the other was retained in the title of the cause, and hence the appeal would not be dismissed on the ground that the notice appeared to have been taken by all of the defendants, and that the undertaking recited that the judgment was entered against all.

Appeal from Circuit Court, Minnehaha County.

Action by Mary Garrigan against Samuel Kennedy and others. From a judgment in favor of plaintiff, defendants Kennedy and Smith appeal. Reversed.

Robertson & Dougherty and Kittredge, Winans & Scott, for appellants. Joe Kirby, for respondent.

CORSON, J. This is an action by the plaintiff, widow of Michael Garrigan, deceased, to recover of the defendants damages alleged to have been sustained by her by

Digitized by Google

reason of the sale of intoxicating liquors to her husband in his lifetime. Verdict and judgment were for the plaintiff, and the defendants Kennedy and Smith have appealed.

A motion has been made to dismiss the appeal on the ground that the notice of appeal purports to have been taken by all three of the defendants, and that the undertaking on appeal recites that the appeal is taken from the judgment entered against all the defendants, but that in fact one of the defendants, Gilbert Gilman, did not answer or appear in the action, and no verdict or judgment was taken against him. The respondent has filed an additional abstract setting forth the facts which he claims are shown by the record, but an examination of the original record discloses that the notice of appeal was signed by the attorneys for Samuel Kennedy and O. H. Smith, naming them. The respondent was therefore notified that the appeal was taken only by Kennedy and Smith, although the name of Gilman appeared in the title of the action. The undertaking must be construed with reference to the notice of appeal, and notwithstanding it recites that the appeal is taken from "a judgment entered against the above-named appellants," the recital must necessarily be limited to the appellants appearing by the notice of appeal, and against whom the jury found its verdict and the court entered judgment. Retaining the title of the case, therefore, in the notice of appeal and undertaking, could not have misled the respondent, and, as the appeal was only by Kennedy and Smith, the undertaking is clearly valid and binding upon them. The motion to dismiss the appeal must therefore be denied.

Upon the merits of the case it is sufficient to say that the case is similar to that of Mary Garrigan v. John T. Thompson et al. (decided at the present term of this court) 95 N. W. 294, and the questions involved are practically the same as those involved in that case. For the reasons stated in that decision, therefore, the judgment of the court below is reversed.

REINKE v. GERMAN EVANGELICAL LUTHERAN TRINITY CHURCH.

(Supreme Court of South Dakota. July 22, 1903.)

RELIGIOUS SOCIETY—EXPULSION OF MEMBER—LIABILITY FOR DAMAGES.

1. An incorporated religious society, having no capital stock, the powers of which relating to business and property are required by its charters to be exercised by a board of trustees, only two-thirds of whom need be members of the church, and whose action may be rejected by the congregation, and who have nothing to do with the matters of discipline or expulsion, is not liable for damages for the expulsion of a member by the congregation.

Appeal from Circuit Court, Brookings County.

Action by August Reinke against the German Evangelical Lutheran Trinity Church. Judgment for plaintiff. Defendant appeals. Reversed.

Cheever & Cheever, for appellant. Alexander & Hooker, and Philo Hall, for respondent.

FULLER, J. In this action for damages, plaintiff recovered judgment against the corporate defendant for $190 alleged to have been contributed toward the acquisition of church property, and the controlling question here presented is whether an incorporated religious society is legally liable for damages arising from the action of the assembled congregation in excommunicating a member.

In substance, the complaint alleges that the minister employed conducts a parochial school, and the corporation owns a church, parsonage, and cemetery, from the rights, privileges, and benefits of which respondent is excluded by wrongful expulsion, and has thereby suffered damages in the amount claimed. Both the constitution and by-laws of appellant declare that the church is established for the purpose of maintaining and promoting religious worship according to the general usages of the Evangelical Lutheran Church, and there is nothing therein, nor in the statute conferring power to organize, which expressly authorizes the purchase of a cemetery or the establishment of a parochial school. The corporation has no capital stock, and its constitution and by-laws, as well as the authorizing statute, require all powers relating to business and property to be exercised by a board of trustees, only two-thirds of which must be members of the church. These trustees, whose action the congregation by which they are elected may reject or ratify, have nothing to do with the matter of discipline or expulsion, and the corporation is not bound by nor answerable in damages for the conduct of unofficial members, nor is money, voluntarily contributed for the support of the church, recoverable in an action of this character. Annie Hardin v. The Trustees of the Second Baptist Church of the City of Detroit, 51 Mich. 137, 16 N. W. 311, 47 Am. Rep. 555; Nance v. Busby (Tenn.) 18 S. W. 874, 15 L. R. A. 801; Sale v. The First Regular Baptist Church of Mason City, 62 Iowa, 26, 17 N. W. 143, 49 Am. Rep. 136. It follows from the diversity of functions, and the fact that nonmembers may be chosen as officers, that the corporation, created pursuant to statute for temporal purposes, is not identical with the ecclesiastical membership by which and from which respondent was expelled.

As this suit for damages neither involves a property right invaded by the corporation through the instrumentality of its trustees, nor relates to an act for which such corporation is in the slightest degree responsible, respondent cannot recover. The judg-

ment appealed from is therefore reversed, with the direction that the complaint be dismissed.

STOCKER v. PUCKETT.

(Supreme Court of South Dakota. July 22, 1903.)

EXECUTION—SALE—REDEMPTION—EXPIRATION OF RIGHT TO REDEEM.

1. Comp. Laws 1887, § 5151, authorizes a judgment debtor or a "redemptioner" to redeem property sold on execution within one year after the sale. Section 5152 declares that, if a redemptioner redeems, "the property may be again and as often as a redemptioner is so disposed, redeemed from any previous redemptioner within sixty days from the last redemption," and, "if no redemption is made within one year after the sale, the purchaser or his assignee is entitled to a conveyance," etc. *Held*, that the right of the judgment debtor or of his successor in interest to redeem, either from the purchaser at the sale or from a prior "redemptioner," expires at the end of a year from the sale; a prior redemption within the year not extending the time.

Appeal from Circuit Court, McPherson County.

Action by John Stocker against Benjamin F. Puckett. Judgment for plaintiff. Defendant appeals. Affirmed.

James M. Brown, for appellant. Herreid & Williamson, for respondent.

FULLER, J. This action in equity to quiet title to real property described in the complaint terminated below in a judgment for plaintiff, and the defendant appeals.

Respondent's motion to dismiss the appeal is denied upon its merits, for the reason that the grounds relied upon are not sufficiently substantiated by the affidavits and record properly before us. The averments of appellant's answer and the admissions of respondent concerning certain redemptions by a judgment creditor from the concurrent foreclosure of two mortgages on the property, by virtue of powers of sale regularly pursued, eliminate all questions as to the validity of the foreclosure and redemption proceedings, upon which respondent bases his title under a sheriff's deed.

The essential facts may be thus stated in connection with the statutory provisions to be construed: On the 29th day of April, 1899, the mortgages were foreclosed, and Wilhelmina Weisser, being then the owner of the premises, was entitled to redeem at any time within one year from the date of sale. Trenery v. American Mortgage Company, 11 S. D. 506, 78 N. W. 991. On the 28th day of April, 1900, Jacob Gutjahr, a creditor having a lien by judgment, redeemed from the foreclosure sales, and appellant, as the grantee of Wilhelmina Weisser, attempted to redeem from such redemptioner on the 27th day of June, 1900. While the sheriff accepted appellant's money and issued the usual certificates of redemption, he conveyed the premises to Gutjahr, by sheriff's deed on the 25th day of August, 1900.

It is contended by his counsel that appellant, as the successor of the mortgagor, lawfully redeemed from Gutjahr, and, there being no further redemptions, was entitled to the sheriff's deed at the expiration of 60 days. Fourteen months having intervened between the foreclosure sale and appellant's effort to redeem, the exact point presented is whether his right to redeem expired one year from the date of sale. The statute expressly limits the term "redemptioner" to a mortgagee or judgment creditor having a lien subsequent to that on which the property was sold, and provides that the debtor or his successor in interest may redeem within one year after the sale. Comp. Laws 1887, §§ 5150, 5151, being sections 375 and 376, Rev. Code Civ. Proc. If a redemptioner redeems, "the property may be again, and as often as a redemptioner is so disposed, redeemed from any previous redemptioner within sixty days after the last redemption," and, "if no redemption be made within one year after the sale, the purchaser or his assignee is entitled to a conveyance; or, if so redeemed, whenever sixty days have elapsed, and no other redemption has been made, and notice thereof given, and the time for redemption has expired, the last redemptioner, or his assignee, is entitled to a sheriff's deed; but in all cases the judgment debtor shall have the entire period of one year from the date of the sale to redeem the property." Comp. Laws 1887, § 5154, being section 379, Rev. Code Civ. Proc.

Not only does the statutory definition of a "redemptioner," as well as the difference in procedure and effect of redemption, place one having a lien by mortgage or judgment in a class entirely different from the mortgagor or his successor in interest, but the latter is given the exclusive right of possession, together with the rents and profits, during the year within which he may destroy the effect of the sale by paying the amount collectible, and thus be restored to his estate. Rudolph v. Herman, 4 S. D. 283, 56 N. W. 901. By granting the mortgagor or his successor in interest perfect immunity, for the full period of one year, from the action of the mortgagee and subsequent creditors having liens, the Legislature has accorded greater indulgence than it shows to those classified as "redemptioners," for they must redeem from one another within 60 days. State v. O'Connor, 6 N. D. 285, 69 N. W. 692. In language justifying no exception or suggestion of uncertainty, and as a matter of favor, the mortgagor or his successor in interest may have "the entire period of one year from the day of the sale to redeem the property," and it is not within the province of the courts to extend that time.

We therefore conclude that appellant's right to redeem expired in one year from the date of the sale, and the judgment appealed from is affirmed.

Digitized by Google

COUGHRAN v. CITY OF HURON.

(Supreme Court of South Dakota. July 22, 1903.)

MUNICIPAL CORPORATIONS — DISCONNECTION OF TERRITORY—JURISDICTION — PETITION—SUFFICIENCY—EFFECT OF SPECIAL CHARTER.

1. The circuit court has jurisdiction of a proceeding by plaintiff to have a certain quarter section of land belonging to him disconnected from defendant city.

2. Pol. Code, § 1609, provides that on petition in writing signed by not less than three-fourths of the legal voters, and by the owners of not less than three-fourths in value of the property in any territory in any incorporated city or town, and being upon the border and within the limits thereof, the city may disconnect and exclude such territory from such city. *Held*, that where it affirmatively appeared from the petition that there was no person residing on the property sought to be excluded, and the petition was signed by the sole owner thereof, the statute was complied with.

3. Pol. Code, § 1609, relating to the disconnection of territory from a city, applies to a city operating under a special charter.

Appeal from Circuit Court, Beadle County.

Petition by Frank R. Coughran against the city of Huron, a corporation, to have a certain quarter section of land excluded from the city. Judgment for plaintiff. Defendant appeals. Affirmed.

John Wood and A. B. Fairbank, for appellant. W. A. Lynch, for respondent.

CORSON, J. This is an appeal from a judgment in favor of the plaintiff, disconnecting and excluding a quarter section of land belonging to him from the defendant city. There being no bill of exceptions, the only questions to be considered are those presented by the judgment roll. A demurrer was interposed to the petition filed by the plaintiff upon the grounds: (1) That the court had no jurisdiction of the subject-matter of the action; (2) that the petition did not state facts sufficient to constitute a cause of action; and (3) that the defendant, operating under a special charter, was not affected by the statute relating to the disconnecting of territory from a city. The demurrer was overruled, and the defendant duly excepted, and, the same being a part of the judgment roll, is before us for review. Section 319, Code Civ. Proc.

The appellant contends that its demurrer should have been sustained upon the three grounds stated. The question presented by the first contention, that the court had no jurisdiction, was settled by this court in the case of Pelletier v. The City of Ashton, 12 S. D. 366, 81 N. W. 735, and a review of that decision satisfies us that it is fully sustained by the authorities.

The second contention, that the petition does not state facts sufficient to constitute a cause of action, in that it fails to show that the petition was signed by three-fourths or any voters, and that the plaintiff was a resident of the state, presents a question of more difficulty. Section 1609, Pol. Code, provides that on petition in writing, signed by not less than three-fourths of the legal voters, and by the owners of not less than three-fourths in value of the property, in any territory within any incorporated city or town, and being upon the border and within the limits thereof, the city may disconnect and exclude such territory from such city. And by section 1611 it is provided that, upon the failure of the city council to grant the request, the petitioner may present the petition to the circuit court, and that, if upon a hearing the court shall find that the request of the petition ought to be granted, it shall be so granted. It affirmatively appears from the petition presented to the circuit court that no person resided upon the quarter section of land sought to be disconnected, and of course, therefore, the petition could not be signed by any persons as voters. The petition, as above stated, was signed by the sole owner of the property, and in that respect complied with the statute. The Legislature, in enacting the law, evidently contemplated that a number of parties owning land within the territory sought to be excluded would join in a petition, and it also contemplated that there might be legal voters within the said territory so sought to be disconnected, and hence the provisions were so framed as to include that class of cases. But where, as in the case at bar, only one owner petitions, and no person resides upon the property sought to be disconnected, there cannot be a literal compliance with the statute. It will be noticed, however, that there is no limitation as to the extent of territory that may be disconnected and excluded, the only limitation being that the provisions of the section shall only apply to lands not laid out into city or town lots or blocks, and shall be on the border and within the limits of the city. We are of the opinion, therefore, as it affirmatively appears that there was no legal voter residing within the territory sought to be disconnected and excluded, the case comes within the statute, notwithstanding that the petition is signed only by the owner of the property. Such, evidently, was the intention of the Legislature, and "the intent is the vital part, the essence of the law." Sutherland on Statutory Construction, § 234 et seq. Certainly the Legislature could not have intended that parties should be deprived of the right to have property owned by them disconnected and excluded from a city, which property is vacant and unoccupied, unless other parties join with them whose property is occupied, and upon which there are residing legal voters who join in the petition. It is evident that the intention of the Legislature was to permit any person owning lands upon the border within the limits of a city to have his property disconnected and excluded from the said city, but, when there are legal voters residing within such territory, three-fourths

Digitized by Google

of the said voters must also sign the petition, and, when the territory sought to be excluded includes the property of a number of persons, at least three-fourths of the owners in value of such property must sign the petition. Thus construed, the statute protects the rights of all, and carries into effect the evident intent of the Legislature.

The last contention of the counsel, that as the defendant city was operating under a special charter the law is not applicable to it, is clearly untenable. As a city operating under a special charter is not excepted in the law, it is not competent for this court to interpolate such an exception therein. Heyler v. City of Watertown (S. D.) 91 N. W. 334. The circuit court was therefore clearly right in overruling the demurrer.

The judgment of the circuit court is affirmed.

EMERICK v. SWEENEY CATTLE CO. et al.

(Supreme Court of South Dakota. July 22, 1903.)

CONSPIRACY—PLEADING—COMPLAINT—SEVERAL ACTS—JOINDER.

1. Where in an action for conspiracy the complaint alleged that defendants, with intent to cheat plaintiff, effected a combination which enabled them to swindle her out of an undivided one-half interest in certain cattle, and alleged the means resorted to in accomplishment of such purpose, but only claimed such damages as resulted from such conspiracy, the complaint was not objectionable as improperly uniting several causes of action by reason of the fact that the acts alleged to have been performed in furtherance of the conspiracy by which plaintiff was injured embraced different transactions.

Appeal from Circuit Court, Pennington County.

Action by Ada A. Emerick against the Sweeney Cattle Company and others. From a judgment in favor of plaintiff, defendants appeal. Affirmed.

Charles W. Brown and Wood & Buell, for appellants. Fred H. Whitfield and Schrader & Lewis, for respondent.

FULLER, J. A trial of the issues formed by the complaint, answer, counterclaim, and reply, in this action based upon a conspiracy, terminated in a judgment for respondent, concerning which appellants have assigned no error. Before answering, they severally demurred to the complaint on the following statutory grounds: "That there is a defect of parties defendant. That several causes of action have been improperly united. That the complaint does not state facts sufficient to constitute a cause of action." These demurrers were overruled, and appellants' brief is mainly directed to the point that several causes of action are improperly united.

While the complaint contains matter that might rightfully be considered surplusage, there is a specific charge of every fact and circumstance essential to a conspiracy and an action for damage predicated thereon. It is shown by the most ample averments that appellants, with the intent to cheat and defraud respondent, effected a combination which enabled them to swindle her out of an undivided one-half interest in a large number of cattle. The means to which they resorted in the accomplishment of such common purpose are clearly shown by the use of plain and concise language. While the acts done in furtherance of the conspiracy, and by which respondent was injured, embrace different transactions, but one cause of action and one conspiracy is alleged, and no damages, other than such as resulted therefrom, were recovered.

The complaint is not demurrable, and the judgment appealed from is affirmed.

GRETHER v. SMITH et al.

(Supreme Court of South Dakota. July 22, 1903.)

MORTGAGES—TRANSFER OF NOTE—EFFECT ON MORTGAGE—PARTNERSHIP—DEATH OF PARTNER—CONTINUANCE OF BUSINESS—TRANSFER OF NOTE — TITLE OF TRANSFEREE — DECEASED PARTNER'S ADMINISTRATOR — TRANSFER BY ADMINISTRATOR.

1. The transfer of a note secured by a mortgage carries with it the security as an incident.

2. Where a note and mortgage to a firm were taken in the name of one of the partners, and after his death the firm business was conducted as before, without any accounting or settlement of the partnership business between the surviving partner and the deceased's representative, and the surviving partner indorsed the note to plaintiff, the indorsed note, together with other facts, prima facie established plaintiff's ownership of the note and mortgage.

3. In a suit by plaintiff to quiet title to the mortgaged premises, it appearing that there had been no objection on the part of the deceased partner's administrator, or on the part of any creditor of the estate, to the failure of the surviving partner to settle the partnership, and defendant not making any attempt to establish any right or interest in the note and mortgage, a judgment dismissing the complaint was erroneous.

Appeal from Circuit Court, Beadle County.

Suit by Anna Grether against Charles H. Smith and others. From a judgment dismissing the complaint, plaintiff appeals. Reversed.

John Wood, A. B. Fairbank, and Boyce & Warren, for appellant. T. H. Null, for respondents.

FULLER, J. In this equitable action to remove a cloud and foreclose a mortgage on real property, executed by Charles H. Smith and wife on the 11th day of February, 1886, to secure their promissory note for $400, the defendant Riegel, denying plaintiff's ownership, and claiming to be the lawful assignee of such note and mortgage, prayed for the usual decree of foreclosure, together with judgment against plaintiff for costs and disbursements.

¶ 1. See Mortgages, vol. 35, Cent. Dig. § 621.

Digitized by Google

The note offered by plaintiff and received in evidence under the complaint was made payable to the order of F. T. Walker, and indorsed on the back as follows: "Pay Anna Grether or order. F. T. Walker." The mortgage was also taken in the name of F. T. Walker, as mortgagee, and a duly executed and acknowledged assignment thereof, under date of October 4, 1886, is upon the back of the instrument, as follows: "For value received I hereby sell, assign and transfer unto Anna Grether all my right, title and interest in and to the within the mortgage. F. T. Walker." When Smith and wife gave this mortgage, and for many years prior thereto, F. T. Walker and D. Rhomberg were copartners engaged in the real estate and loan business, in the city of Dubuque, under the name of Walker & Rhomberg, and it was a loan of their money to secure the payment of which the note and mortgage were executed. According to their universal custom, and as a matter of convenience in negotiating such securities, all notes and mortgages belonging to the firm were taken in the name of F. T. Walker, who, as the field man, made all loans, while Rhomberg remained at the office and disposed of them to investors. About the time the Smith note and mortgage reached the office of Walker & Rhomberg, they borrowed a large amount of money of Mrs. Berry, and, as collateral security to their note, delivered to her this note and mortgage, together with other securities, which she held until the year 1895, when she received payment in full, and surrendered the securities to Rhomberg.

During the time intervening between the making and payment of the Berry loan, and in March, 1889, F. T. Walker died, and by the terms of his will his wife, Nellie J. Walker, became the owner of his entire estate, consisting of an undivided one-half interest in the firm of Walker & Rhomberg, together with the proceeds of certain life insurance policies amounting to $19,000. The assets of the firm of Walker & Rhomberg consisted principally of promissory notes taken in the name of F. T. Walker, who indorsed the same in blank at the time of their execution, in order to facilitate their negotiation during his absence, and the mortgages given to secure the same were assigned in blank over the duly acknowledged signature of F. T. Walker, the mortgagee named in such instruments. Agreeable to the desire of F. T. Walker that the business be carried on after his death, just as before, in the name of Walker & Rhomberg, and that the insurance money which his widow would receive be placed in the firm for its betterment, Mrs. Walker contributed $11,000 thereof, and from time to time thereafter drew out sums aggregating $13,000. Letters testamentary were duly issued to Nellie J. Walker, as the only personal representative and sole devisee under the will, in which she was named as executrix, and the partnership business proceeded, with her knowledge and acquiescence, just as it had in the lifetime of her husband. No accounting or final settlement of the partnership business has ever been had between D. Rhomberg and Mrs. Walker, but Rhomberg has had the entire management of the business, which has always been conducted in the name of Walker & Rhomberg.

In the year 1897, as collateral security for a loan in the name of the firm, he delivered to the plaintiff, Anna Grether, the note and mortgage in suit, and inserted her name, as indorsee and assignee of such instruments, over the signature of F. T. Walker. Independently of the assignment of the Smith mortgage, the transfer of the note would carry with it the security as an incident, and the possession of such note, duly indorsed and offered in evidence at the trial, was sufficient, when considered with all the other testimony, to establish the prima facie ownership of plaintiff.

In the absence of an objection on the part of Mrs. Walker or some creditor of the estate, the failure of Rhomberg, as surviving partner, to comply with the statute in settling the affairs of the partnership, is not sufficient to absolutely defeat his transfer of property in which he was confessedly interested to the full extent of one-half.

When plaintiff concluded her evidence and rested, it was clear and undisputed that the business had been conducted ever since the death of Mr. Walker, and without interruption or objection, in the name of the firm, and the defendant, who made no attempt to establish any right to or interest in the note and mortgage, was not entitled to a judgment dismissing the complaint.

From the foregoing, and the further fact that the court declined to make any finding upon the issues presented by the pleadings, the judgment appealed from is reversed, and the case remanded for further proceedings.

PETTIGREW et al. v. MOODY COUNTY.

(Supreme Court of South Dakota. July 22, 1903.)

TAXATION—INVALIDATING TAXES ON PARTICULAR PROPERTY — JUDGMENT FOR JUST TAXES—TENDER—NECESSITY.

1. Under Comp. Laws 1887, § 1643, as amended by Laws 1893, c. 160, p. 273 (Rev. Pol. Code, § 2225), requiring the court in an action to restrain the collection of a tax, or to recover any taxes before paid, or to recover the title of any property sold for taxes, or to restrain payment of taxes, to render judgment for the amount of taxes due on the property, in an action against a county to invalidate tax proceedings for a particular year so far as they related to the land described in the complaint, the county is entitled to recover judgment for the just amount of the taxes on the land unpaid.

2. Plaintiff, in an action to invalidate the tax proceedings for a particular year so far as they related to the land described in the complaint, need not tender to the county the amount of taxes justly recoverable.

Digitized by Google

Appeal from Circuit Court, Moody County.

Action by Jennie S. Pettigrew and others against Moody county. From a judgment for plaintiffs, defendant appeals. Reversed.

George Rice and J. Q. Adams, for appellant. U. S. G. Cherry, for respondents.

FULLER, J. Pursuant to statute, this action was to enforce plaintiffs' equitable right to have certain voidable tax proceedings for the year 1898 canceled and set aside so far as the same relate to the land described in the complaint. Although plaintiffs concede that the property was subject to taxation for that year, the actual amount collectible was not ascertained, and the trial court entered an unconditional decree nullifying all proceedings, and restraining the defendant county from ever asserting a lien thereunder. According to our view of the judgment appealed from, it is needless to discuss the unauthorized proceedings, which fully justify the finding that the assessment and all subsequent steps taken by the taxing officers are illegal and void.

The only essential question to be determined is whether the county was not entitled to recover judgment in the action for the just amount of taxes delinquent and unpaid. That respondents were ready to act in accordance with their conception of equity in the premises, and pursuant to statute, is apparent from the following paragraph of their complaint: "That prior hereto the plaintiff tendered to the defendant all the sums of money justly due or owing for taxes, either for state, county, municipal, school, or other purposes, against said lands and premises, and now brings the same into court and offers to pay the same." While the undisputed testimony shows that $300 was legally tendered in full settlement of the taxes for 1898, and $526 is claimed, nothing was done by the trial court to ascertain what sum was the true and correct amount.

Consonant with the equitable doctrine that an applicant for relief in a case of this character must invariably pay the actual amount of taxes chargeable against his property, the Legislature of this state has declared that: "Whenever any action or proceeding shall be commenced and maintained before any court to prevent or restrain the collection of any tax or part thereof, or any particular act of any officer in the collection thereof, or to recover any such tax before paid, or to recover the possession or title of any property real or personal, sold for taxes, or to invalidate or cancel any deed or grant thereof for taxes, or to restrain, prevent, recover or delay any payment of taxes, the true and just amount of taxes due upon such property or by such person must be ascertained and judgment must be rendered and given therefor against the taxpayer, and the court may, if in its opinion the assessment or any subsequent proceeding has been rendered void or voidable by the omission or commission of any act required or prohibited, order a reassessment of such property to be made by the proper officer, acting at the time of making of such order and the taking by the proper officers then acting of all such steps subsequent to assessment as shall be necessary to amend such assessment and levy, to the end that the whole matter may be adjudicated in the one action or proceeding and the proper proportion or ratio of tax be paid by the property owner." Section 1643, Comp. Laws 1887, as amended by chapter 160, p. 273, Laws 1893, being section 2225 of the Revised Political Code.

In Clark v. Darlington, 11 S. D. 418, 78 N. W. 997, we say: "It has been the policy of the people of this state and of the former territory to require the payment of taxes on all real property subject to taxation, and hence they have provided that, whenever any action or proceeding shall be commenced to invalidate or cancel any deed or grant for taxes, it shall be the duty of the court to ascertain the true and correct amount of taxes due upon such property, and render judgment therefor."

It being made the duty of the court, both by statute and in equity, to ascertain and adjudge the correct amount of taxes to be paid by the owner, it is not even necessary to tender the amount justly recoverable. Campbell v. Equitable Loan & Trust Co., 14 S. D. 483, 85 N. W. 1015. In a North Dakota case of this character, where the person making the assessment was without even colorable authority to act, and all subsequent proceedings were fatally defective, it was held, in construing section 1643, supra, that relief can be granted only upon condition that plaintiff pay the just amount of taxes for which his property is liable, and that such a judgment in no manner depends upon a request therefor by either party, because the statute was enacted for the protection of the public revenue, and is mandatory in the requirement that "the true and just amount of taxes due upon such property or by such person must be ascertained, and judgment must be rendered and given therefor against the taxpayer."

The judgment appealed from, though proper in certain respects, is reversed for the reason specified, and the case is remanded with the direction that the court ascertain the true and just amount of taxes due appellant for the year 1898, and accordingly render a judgment which shall be equitable to both parties and a paramount lien upon the property until the same is fully satisfied.

Digitized by Google

TENNEY v. RAPID CITY.

(Supreme Court of South Dakota. July 22, 1903.)

MUNICIPAL CORPORATIONS—DEFECT OF SIDEWALKS—INJURIES—DAMAGES—EVIDENCE—OPINION—LIFE TABLES—HEARSAY.

1. In an action for several injuries alleged to have been sustained by defects in a city sidewalk, it was error for the court to permit plaintiff to give her judgment as to the amount of damages she had sustained for each injury.

2. Where, in an action for injuries, there was no evidence of permanent disability, tables showing expectancy of life were inadmissible.

3. In an action for injuries on a city sidewalk, evidence that plaintiff had told witness she had fallen on the sidewalk not at the time of the injury was inadmissible, as hearsay.

Appeal from Circuit Court, Pennington County.

Action by Jennie E. Tenney against Rapid City. From a judgment in favor of plaintiff, defendant appeals. Reversed.

A. K. Gardner and Charles W. Brown, for appellant. Edmund Smith and Fred H. Whitfield, for respondent.

CORSON, J. Plaintiff brought this action to recover damages for injuries alleged to have been sustained by her by reason of the defective condition of the sidewalks of the defendant city. The plaintiff claims to have received injuries at five different times, extending over a period of about a year, and her complaint contains five counts or causes of action. Verdict and judgment were in favor of the plaintiff, and the defendant has appealed.

The defendant has assigned numerous errors, but in the view we take of the case it will only be necessary to consider three of them. The counsel for the plaintiff was permitted to ask, and the plaintiff to answer, over proper objection on the part of the defendant, the following questions: "Now, referring to the injury at that time, and the time you were laid up and suffering, what would you say in your judgment was the amount of damages you sustained?" The witness answered, "I should say it was at least $200 for that time." She was then asked the following question: "Now, referring to the next accident, Mrs. Tenney, which occurred up near the Mathias Place, what would you say that accident damaged you, considering the loss of time and pain, and your condition since as a result of it?" She answered: "The same as I did." The witness was then asked the following question: "You may go on and state to the jury what, in your opinion and judgment, was your damage for that accident at the Jester sidewalk in October, 1899?" She answered, "$100." Q. "Referring to the second accident, what, in your opinion, was the damage for that accident?" She answered, "I would say $100. Q. Now, referring to the Kirkham Place—the injury there, the last one, in December, 1899, or January, 1900—state what damage you sustained for loss of time, expense money, nurse, medicine, and doctor bills which were incurred and have not been paid. A. I should say $500." Motion was made to strike out the several answers, and denied. This evidence was clearly inadmissible. It was the province of the jury to determine the amount of damages to which the plaintiff was entitled if they found that she was entitled to any, and it was not competent for the plaintiff to give her opinion as to the amount of damages she had sustained. Webster v. White, 8 S. D. 479, 66 N. W. 1145; Tetrault v. O'Connor, 8 N. D. 15, 76 N. W. 225; Kneeland v. Great Western Ele. Co., 9 N. D. 49, 81 N. W. 67; Erickson v. Sophy, 10 S. D. 71, 71 N. W. 758. It may be stated as a general rule that even an expert witness cannot be allowed, in giving his evidence, to usurp the province of the court and jury by drawing conclusions from the facts upon which the case depends. Jones on Ev. § 374. There is an exception to the general rule, but this case does not come within the exception.

The plaintiff offered in evidence the life tables of the expectation of life of the Northwestern Life Insurance Company. The defendant objected to the offer, for the reason that it was irrelevant and immaterial to any issue in this action, there being no proof of permanent disability, and was not the proper basis for the measure of damages. Objection overruled, and the defendant excepted. The admission of these life tables was clearly erroneous, and constituted prejudicial error. No evidence is disclosed by the record tending to prove that the plaintiff was permanently injured, or might not recover from the injuries received. The admission of these tables, therefore, constituted reversible error. Foster v. Village of Bellaire, 127 Mich. 13, 86 N. W. 383; Leach v. R. R. Co., 125 Mich. 373, 84 N. W. 316; Sax v. Railway Co., 125 Mich. 252, 84 N. W. 314, 84 Am. St. Rep. 572; Mott v. Detroit, G. H. & M. R. R. Co., 120 Mich. 127, 79 N. W. 3; City of Honey Grove v. Lamaster (Tex. Civ. App.) 50 S. W. 1053.

In Foster v. Village of Bellaire, supra, the Supreme Court of Michigan, in speaking of the admission of that class of testimony, uses the following language: "The testimony offered on the part of the plaintiff tended to show that she was seriously injured, but it did not show she might not recover from her injuries. Against the objection of counsel for defendant, the tables of mortality were introduced in evidence. In Mott v. Railway Co., * * * supra, it was held, 'Mortality tables are only admissible in cases of permanent injury, or when the suit is brought by the representative of a deceased

¶ 1. See Evidence, vol. 20, Cent. Dig. § 2284.

person.' For this error, judgment is reversed and a new trial ordered."

On the trial the witness Jennie Trobridge was asked the following question: "State whether or not Mrs. Tenney told you she had fallen on the sidewalk." The defendant objected to this question, on the ground that it called for hearsay testimony and self-serving declarations. The objection was overruled, and the defendant excepted. The witness answered, "The plaintiff told me that she had fallen twice on the sidewalk. I don't know that she said anything about falling just then." The defendant moved to strike out the answer, for the reason that the declaration of the plaintiff was not as to her fall occurring at or near the time of the accident, and was no part of the res gestæ, was immaterial, and a self-serving declaration. Mr. Jones in his work on Evidence says: "It would be obviously unsafe if parties to litigation were, without restriction, allowed to support their claims by proving their own statements made out of court. Such a practice would be open not only to all the objections which exist against the admission of hearsay in general, but would also open the door to fraud and to the fabrication of testimony. * * * But it is a general rule of broad application that the declarations of a party in his own favor are not admissible in his behalf." 1 Jones on Ev. § 236.

The judgment of the circuit court and order denying a new trial are reversed.

BROOKINGS LAND & TRUST CO. v. BERTNESS *et ux.*

(Supreme Court of South Dakota. July 22, 1903.)

AGENT PURCHASING LAND FOR HIMSELF—TRUSTEE—STATUTE OF FRAUDS.

1. Plaintiff commenced negotiations with the owner of land for its purchase, but left them with B. to act as his agent, agreeing to pay him a commission if he could purchase it for plaintiff for a price not above $18 per acre. He could not get it for that price, and, without reporting to plaintiff, purchased it for himself for a slightly greater price, taking the deed in his wife's name. *Held*, that by reason of B.'s confidential relations a trust arose, enforcement of which is not prevented by the statute of frauds, plaintiff having tendered the price paid and the commission.

Appeal from Circuit Court, Brookings County.

Action by the Brookings Land & Trust Company against Theman J. Bertness and wife. Judgment for plaintiff. Defendants appeal. Affirmed.

Olaf Eidem and Alexander & Hooker, for appellants. Hall & Roddle and Cheever & Cheever, for respondent.

CORSON, J. This is an action to compel the defendants to convey to the plaintiff a half section of land situated in Brookings county. Findings and judgment were in favor of the plaintiff, and the defendants appeal.

Such of the court's findings of fact as we deem material to a proper understanding of the questions to be considered are: "(3) That on the 27th day of May, 1901, the plaintiff, the Brookings Land & Trust Company, and the defendant Theman J. Bertness, entered into an agreement wherein and whereby the said Theman J. Bertness became and was to act as agent for the said Brookings Land & Trust Company, plaintiff herein, in the matter of the purchase and conveyance to the plaintiff of the following described land situated in the county of Brookings and state of South Dakota, to wit: * * * (4) That under and by virtue of the terms of said contract and agreement the plaintiff was to pay the said defendant Theman J. Bertness the sum of $1.25 per acre, or $400, and the said Theman J. Bertness was to receive said sum of $400 for services as such agent for the plaintiff. * * * (5) That the defendant Theman J. Bertness, acting as such agent for the plaintiff, and under its directions and instructions to purchase and procure the conveyance of said real estate to the plaintiff, did wrongfully, fraudulently, and against the will and without the consent of the Brookings Land & Trust Company, the plaintiff herein, negotiate for the purchase of the said real estate from the owner thereof, one Crawford S. McWilliams, for the benefit of him the said Theman J. Bertness, and the said Theman J. Bertness, defendant herein, wrongfully, fraudulently, and contrary to his duties and obligations as such agent for the plaintiff, and regardless of the rights of his said principal, the Brookings Land & Trust Company, the plaintiff herein, obtained and procured the conveyance of the said premises by warranty deed from the said Crawford S. McWilliams to the defendant Julia T. Bertness, wife of the said Theman J. Bertness, and one of the defendants herein, which warranty deed was so executed by said Crawford S. McWilliams to said Julia T. Bertness on or about May 28, 1901, and was duly acknowledged so as to entitle the same to record, and the same was thereafter, and on June 6, 1901, at 11:15 o'clock a. m., filed for record in the office of the register of deeds in and for said Brookings county, South Dakota, in Book 29 of Deeds, at page 560, and that the consideration expressed in said deed was the sum of fifty-six hundred dollars. * * * (7) That said deed was so made by the said Crawford S. McWilliams to the said Julia T. Bertness, wife of Theman J. Bertness, * * * for the purpose of evading the liability of the said Theman J. Bertness, as agent for the plaintiff as aforesaid, and to hinder and delay the plaintiff in the enforcement of its rights in the procurement of the conveyance of said premises." The court also finds that said defendants had full

Digitized by Google

knowledge of plaintiff's rights, and that the plaintiff had duly tendered the full amount paid by them as the consideration for the said premises, and also the sum of $400 as commission for the purchase of the same. The court concludes, as matters of law, "that all the material allegations of the plaintiff's complaint have been established by competent evidence, and that the plaintiff is entitled to the relief demanded in said complaint."

It is contended on the part of the appellants that the evidence in regard to this transaction, upon which the court makes its findings was inadmissible, as the controversy was one concerning the sale of lands, and therefore within the statute of frauds, and could only be proved by some agreement or memorandum in writing subscribed by the party to be charged therewith. It is further contended by the appellants that the findings are not supported by the evidence.

It is insisted by the respondent, in support of the judgment of the court below, that the contract between the plaintiff and Bertness was one of agency, and could have been established entirely by parol evidence, and was not within the statute of frauds, and, though not necessary, the agency was in fact evidenced by a written memorandum. It is further insisted that the defendants are seeking now to set up the statute of frauds for the purpose of carrying out their fraudulent transaction.

The evidence, while somewhat conflicting, in our opinion fully supports the findings of the court. The reproduction of all the evidence in this opinion would serve no useful purpose, and it must suffice to state that it is undisputed that the plaintiff commenced negotiations with Dr. McWilliams for the purchase of the land in controversy by sending him a telegram requesting him to wire the price and terms of sale; that McWilliams, instead of replying by wire, wrote to the plaintiff, and also to Bertness, who, it seems, had attended to some of the business pertaining to his lands in Brookings county, and asking him to give him the value of the land. Bertness called on the president of the plaintiff and informed him that he could get this property for him, and, after some conversation, it was agreed between the president and Bertness that Bertness should act as the agent of the plaintiff in purchasing the property, and should receive therefor the consideration of $1 per acre. This was subsequently increased to $1.25 per acre. This contract as to commission was reduced to writing, and is as follows: "5-27-01. Mr. T. J. Bertness: We will pay you one dollar per acre commission if you can get the Dr. C. McWilliams half section west of Brookings for us with half of the crop for year 1901, for a price not to be above eighteen dollars per acre. [Signed] Brookings Land & Trust Co., By C. E. Childs."

It is quite clear from the evidence that Bertness was employed as agent by the plaintiff to purchase the property, and sent to McWilliams a telegram prepared by the president of the company, but signed by Bertness. Bertness having assumed the relation of agent for the plaintiff, it was not competent for him to take the deed in his own name or the name of his wife for his own use. It is true under the understanding he might have taken the legal title in his own name, but it would have been simply so taken for the benefit of the plaintiff. After assuming to act as the agent of the plaintiff in the purchase of the property, with the amount of commission as such agent fixed, the taking of the property in his own name or the name of his wife, without the knowledge of the plaintiff, was clearly in violation of his fiduciary relations as such agent, and he, or his wife for him, became a trustee for the plaintiff of the property under the statute. It seems to be a well-settled rule in courts of equity that the plea of the statute of frauds can never be allowed to be used as an instrument of fraud. In other words, the statute of frauds is to prevent frauds and perjuries, and not to protect frauds. In Luscombe v. Grigsby, 11 S. D. 408, 78 N. W. 357, this court held that sections 3915 and 3920, Comp. Laws 1887 (providing that "every one who voluntarily assumes a relation of personal confidence with another is deemed a trustee," and one who gains a thing by fraud, the violation of a trust, or other wrongful act, is an involuntary trustee of the thing gained), include an agent appointed to foreclose a mortgage for his principal, who bid in the property in his own name. The rule established in that case is clearly applicable to the case at bar. As above stated, the relation of Bertness to the plaintiff was that of an agent, and he therefore occupied a fiduciary relation, which, so long as it continued, prevented him from acquiring any rights to the property adverse to those of his principal.

It is contended on the part of the appellants that, as the price of the land exceeded $18 per acre, as mentioned in the original contract of agency, when Bertness failed to obtain the land at that price his agency terminated, but we cannot agree with counsel in this contention. Bertness could not consider the negotiations closed until he had informed the plaintiff of the price per acre for which the land could be purchased, and the plaintiff had either accepted the property or had declined to accept the same, and thus closed the agency transaction. Bertness failed to inform the plaintiff that McWilliams would not sell for the price mentioned in the telegram, but proceeded to purchase the property at a trifling advance over the price so mentioned, and took the title in the wife's name.

It is also contended on the part of the appellants that the plaintiff lost nothing by the

Digitized by Google

transaction, and that it was not placed in any different position from what it would have been had not these negotiations been entered into, but this contention cannot be sustained. The plaintiff, as we have seen, had already commenced negotiations with McWilliams for the purchase of the property, and by reason of its agreement with Bertness omitted to continue them, and trusted to the defendant Bertness to carry on the same for it, and by reason of these negotiations it lost the opportunity of purchasing the property.

In Wood v. Rabe, 96 N. Y. 414, 48 Am. Rep. 640, the Court of Appeals of New York says: "There are two principles upon which a court of equity acts in exercising its remedial jurisdiction, which, taken together, in our opinion entitle the plaintiff to maintain this action. One is that it will not permit the statute of frauds to be used as an instrument of fraud, and the other that, when a person through the influence of a confidential relation acquires title to property, or obtains an advantage which he cannot conscientiously retain, the court, to prevent the abuse of confidence, will grant relief. * * * The principle that, when one uses a confidential relation to acquire an advantage which he ought not in equity and good conscience to retain, the court will convert him into a trustee, and compel him to restore what he has unjustly acquired or seeks to unjustly retain, has frequently been applied to transactions within the statute of frauds." Massie v. Watts, 6 Cranch, 148, 3 L. Ed. 181; Church v. Sterling, 16 Conn. 388; Banks v. Judah, 8 Conn. 145; Ryan v. Dox, 34 N. Y. 307, 90 Am. Dec. 696; Church v. Kidd, 3 Hun, 254; Moore v. Crawford, 130 U. S. 122, 9 Sup. Ct. 447, 32 L. Ed. 878; Brison v. Brison, 75 Cal. 525, 17 Pac. 689, 7 Am. St. Rep. 189; Gruhn v. Richardson, 128 Ill. 178, 21 N. E. 18; U. P. Ry. Co. v. McAlpine, 129 U. S. 305, 9 Sup. Ct. 286, 32 L. Ed. 673; Rose v. Hayden, 35 Kan. 106, 10 Pac. 554, 57 Am. Rep. 145.

In Boswell v. Cunningham, 13 South. 354, 21 L. R. A. 54, the Supreme Court of Florida, in discussing the duties of an agent, in the syllabus held: "Where the agent employed to purchase for his principal purchases for himself, all the profits and advantage gained in the transaction belong to the principal, and the agent will be held to have taken the property as trustee for his principal. Such a trust comes within the exception provided for in the statute of frauds, as it arises out of the construction and operation of law, and may be established by parol."

The case of Rose v. Hayden, supra, is directly in point. In that case the Supreme Court of Kansas, in an exhaustive opinion, arrived at the conclusion that a party occupying the position of agent holds the property in trust for his principal, and the court in the course of the opinion says: "The controlling question in this case is not whether the principal advanced the purchase money or not, but it is whether, in equity and good conscience, the agent, who in fact purchased the property with his own money in his own name, in violation of his agreement with his principal, and in abuse of the confidence reposed in him by his principal, can be allowed to retain the fruits of his perfidy. The weight of authority is, we think, that he cannot. Sandford v. Norris, 4 Abb. Dec. 144; Wellford v. Chancellor, 5 Grat. 39; Onson v. Cown, 22 Wis. 329; Winn v. Dillon, 27 Miss. 494; Cameron v. Lewis, 56 Miss. 76; Gillenwaters v. Miller, 49 Miss. 150; Chastain v. Smith, 30 Ga. 96; Heard v. Pilley, 4 Ch. App. 548; Lees v. Nutall, 1 Russ. & M. 53, affirmed on appeal, 2 Mylne & K. 819; Taylor v. Salmon, 4 Milne & C. 134; Cave v. Mackenzie, Fisher, Ann. Dig. 1877, 400; Baker v. Whiting, 3 Sumn. 475 [Fed. Cas. No. 787]; Snyder v. Wolford, 33 Minn. 175, 22 N. W. 254 [53 Am. Rep. 22]; Peebles v. Reading, 8 Serg. & R. 484; Burrell v. Bull, 3 Sandf. Ch. 15. * * * The facts that the defendant was the agent of the plaintiff for the purpose of negotiating for the purchase of the property; that in violation of his agency he purchased the property for himself, and took the title thereto in his own name; and the further facts that the plaintiff has elected to treat the defendant as a trustee holding the property for the plaintiff, and has tendered to the defendant the full amount which the defendant paid for the property, and an additional amount sufficient to compensate the defendant for all his services as agent—are, we think, sufficient to entitle the plaintiff to recover."

We are of the opinion that the findings of the court were fully sustained by the evidence, and that the exceptions of the appellants thereto are without merit. We are also of the opinion that the court's conclusions of law upon the findings are clearly correct, and the judgment of the court below and the order denying a new trial are affirmed.

PEARL TP. v. THORP et al.

(Supreme Court of South Dakota. July 22, 1903.)

EQUITY—IMPROVEMENTS ON LAND—MISTAKE AS TO DESCRIPTION—RIGHTS OF PURCHASER.

1. Where a stake driven by a township engineer on land belonging to the township, for the purpose of indicating where a well should be driven by the township, was wrongfully removed by an unknown party and placed on the land of an individual, and after the well had been sunk there the latter sold the land, neither he nor the purchaser believing the well to be on the description sold, a decree in a suit by the township, providing that the purchaser reimburse the township for the well, or convey to it for a consideration the ground on which the well was situated, was proper.

Appeal from Circuit Court, Sully County.

Suit by Pearl township, of Sully county, against Andrew R. Thorp and another. From

Digitized by Google

a decree in favor of complainant, defendants appeal. Affirmed.

Chas. E. De Land and John F. Hughes, for appellants. Horner & Stewart, for respondent.

FULLER, J. The object of this action is to obtain relief in equity from the consequences of a mutual mistake by which an artesian well, costing the plaintiff township about $2,300, was put down on land supposably its own, but in fact belonging to the defendant Nelson, who immediately thereafter sold and transferred the same to his codefendant Thorp. The action was dismissed as to Nelson, and, by the judgment appealed from, Thorp is required to reimburse the township for the well, or convey to it, for a valuable consideration and within a reasonable time, one-half acre of ground upon which the same is situated.

Careful attention has been given to each alleged error of law occurring at the trial and argued in appellants' brief, but nothing appears to justify a reversal, unless it should be found from the controlling facts, which stand proved by competent testimony, that respondent is not entitled to the relief granted.

The questions raised concerning the admission and rejection of testimony possess no merit, and to discuss each separately would greatly lengthen this opinion, without serving a useful purpose.

By proceedings first had in substantial compliance with the statute, the well in question was regularly located within the boundaries of the respondent township, on a piece of land containing two acres purchased on the 3d day of November, 1900, from the defendant Nelson for that purpose, and described as follows: "Beginning at a point eighty rods north of the southeast corner of the southeast quarter of section 3, township 115, north of range 79, west of the fifth principal meridian, thence north sixteen rods, thence west twenty rods, thence south sixteen rods and thence east twenty rods to the place of beginning." The acting state engineer of irrigation, assisted by the proper township officials, located the well in controversy on the ground above described, 89 rods north of the south line, and 19 rods west of the east line, of said southeast quarter of section three (3) in township one hundred and fifteen (115), north of range seventy-nine (79), west of the fifth principal meridian, and at the same time drove a substantial stake at that point to indicate exactly where the well was to be sunk and completed by the drillers having the contract. Thereafter some unknown person wrongfully, and without the knowledge or consent of any of the officials authorized to act for the township, removed this stake, and placed it upon such quarter section owned by Nelson, at a point 2 rods, 4 feet, and 6 inches west of its original location, and 19 feet west of the west line of the two-acre tract which had been segregated therefrom by purchase and for the purposes of the artesian well. At the time the well machinery was brought upon the ground and placed in position, immediately over the spot where the stake was found, appellant Thorp was present, and during the progress of the work was a frequent visitor there, until the flow of water was struck, and was present upon that occasion. Immediately after the completion of the well, and for the sum of $600, he purchased of Andrew Nelson the unimproved quarter section above described, with the exception of the two-acre tract previously deeded to the respondent township for artesian well purposes. As soon as respondent's officials ascertained that the well in controversy was not upon the 2-acre tract, but upon the 158-acre tract purchased by Thorp from Nelson, they made every reasonable effort to purchase the one-half acre of land upon which the well is situated, and which joins such 2-acre tract on the west, but Thorp declined all negotiations, and said, "We have got the well; we have got a good thing, and we propose to keep it."

According to their own testimony, neither Thorp nor Nelson, at the time the 158-acre tract was purchased, knew that the well was located thereon, but supposed it to be on the 2-acre tract owned by the township. Confessedly, all parties interested were mistaken in the supposition that the well was situated on respondent's property at the place where the stake was placed by its officials and the engineer of irrigation. On this unimproved prairie, the contour of the surface furnishes no special distinguishing features or landmarks, other than the government mounds, and the failure to discover, before the well was put down, that the position of the stake had been changed, is not attributable to the negligence of the township officials.

As tersely stated by respondent's attorneys: "The case presents the naked proposition of whether the plaintiff and respondent, a public corporation, having admittedly expended a large sum of money in the digging and constructing of an artesian well upon land of another, under a mistake engendered and caused by the wrongful removal of a location stake which it had placed upon land of its own to mark the location of the well, has any remedy or any rights, and whether the defendant and appellant Thorp, having admittedly never expended a dollar in the construction of the well, and having stood by and seen the well dug and constructed upon this land, and knowing that it was intended to place the well upon land owned by the township and not upon land owned by another, is to be permitted to absorb absolutely the fruits of the township's labor and expenditure of money, is to be allowed to reap where he has not sown, to profit where he has not toiled."

Digitized by Google

It is manifestly repugnant to our system of jurisprudence, matured by the wisdom of ages, to grant appellant exclusive dominion over this well, dedicated for all time to the use of the people, and for which the taxpayers of the township burdened themselves with indebtedness. If equity suffers no wrong without a remedy, a private person, by reason of a fraud not traceable to its perpetrator, cannot pervert natural justice by retaining such public property without any compensation.

The case of McKelway v. Armour, 10 N. J. Eq. 115, 64 Am. Dec. 445, presents a state of facts which appeal with less ardor to the conscience of the chancellor, and upon which relief was granted similar to that provided for in the decree before us. In that instance there was no fraud, and plaintiff never attempted to ascertain the location of his lot by actual measurements until after his house was completed upon a lot owned by the defendant. Moreover, the contention was between private persons, involving no necessary public demand, such as an ample supply of water satisfies, and the house, unlike the well, might have been moved.

The facts upon which the defendant was given the alternative of taking the improvements by paying their value, or deed his lot for a price to be ascertained by a referee, are stated as follows: "The complainant relies upon circumstances, but they are susceptible of an interpretation quite as consistent with another hypothesis. But it is proved, beyond all doubt, that the complainant erected his improvements on this lot by mistake; he supposed that it was the lot next that belonged to Armour. Armour labored under the same mistake. He lived in the vicinity. He saw the complainant progressing, from day to day, with these improvements. If he knew this to be his lot, his silence was a fraud upon the complainant; but this is not pretended. He admits that he did not suspect the erections to be upon his lot until some time after their erection, when by actual measurement, to his surprise, he discovered the mistake. Under such circumstances, it would be most unjust to permit Armour to take these improvements, and to send the complainant away remediless. It is very true, as was urged upon the argument, the complainant is the most to blame in this matter. A diligent examination of the deed to Armour, and an actual measurement of the land, would have decided the difficulty. But it was a vacant lot of land, plotted out upon a map only, and the mistake was one which might occur to the most careful and diligent man. The fact of Armour's standing by, and participating in the mistake, is an important feature in the case. In adjusting the equities of the parties, a decree should be made, which, while it relieves the complainant, must put Armour to as little inconvenience as possible."

If their testimony is true, Thorp did not undertake to buy, nor Nelson to sell, premises containing the artesian well which the former is now given the option to purchase for his exclusive benefit, or freely partake of its advantages in common with his neighbors, as the statute contemplates. Surely justice has been done, and the judgment appealed from is affirmed.

STATE v. MULCH.

(Supreme Court of South Dakota. July 29, 1903.)

CRIMINAL LAW—RAPE—EVIDENCE—RES GESTÆ—WITNESSES—CROSS-EXAMINATION—CREDIBILITY.

1. In a prosecution for rape it was error to refuse to permit a female witness for the state, in whose presence it was claimed the offense was committed, to be asked on cross-examination whether or not she had not been promised by the state's attorney fees of $1 a day while she was in jail for the purpose of testifying in the cause, for the purpose of affecting her credibility.

2. Where, in a prosecution for rape, the state claimed that defendant had given prosecutrix money in consideration of her consent to sexual intercourse, and defendant, though admitting the giving of the money, claimed it was given to prosecutrix and her companion at their solicitation and representation that they had been robbed, which representations they denied, evidence of a third person concerning a conversation with prosecutrix and her companion in defendant's presence at the time the money was paid, tending to show that they stated they had been robbed, was admissible as res gestæ.

Error to Circuit Court, Lawrence County.

John Mulch was convicted of assault with intent to commit rape, and he brings error. Reversed.

Joseph B. Moore, Thomas E. Harvey, and Ivan W. Goodner, for plaintiff in error. Philo Hall, Atty. Gen., and William H. Parker, State's Atty., for the State.

HANEY, P. J. The defendant who was charged with rape upon a female under 16 years of age, and found guilty of an assault with intent to commit rape, brings this action here for review upon writ of error to the circuit court of Lawrence county.

The date of the crime, if any was committed, was October 5, 1902. The prosecutrix's mother testified that her daughter was born June 10, 1888, and was consequently under 16 years of age. The girl testified that she first met the defendant in a restaurant in Deadwood, where he entertained her and one Lillian McCormick at dinner; that he told her that, if she would come to his place of business on the next Sunday and have sexual connection with him, he would pay her $5; that she and Lillian went to defendant's room, at the rear of a saloon, in the forenoon of the following Sunday, where the defendant and the prosecutrix had sexual intercourse in the immediate presence of the other girl; that the defendant gave the girl

money to pay for their dinners; that after dinner both girls returned to defendant's room, where he and the prosecutrix again had sexual intercourse in the presence of Lillian; and that defendant paid the prosecutrix $5 as he had previously promised to do. Lillian, aged 18, as a witness for the state, testified to the same state of facts. Others testified to having seen the girls go to and from the defendant's room on the day the crime was alleged to have been committed. The defendant, who became a witness on his own behalf, admitted that the girls came to his room and that he gave them money, but he denied having then or at any time had sexual intercourse with the prosecutrix, and stated that he gave the girls money because they solicited it upon the representation that they had been recently robbed. Both girls denied having told defendant anything about being robbed.

The witness Lillian McCormick was asked the following question on cross-examination, to which the state objected as incompetent, immaterial, and not proper cross-examination, and the objection was sustained: "Were you promised by Col. Parker [state's attorney] fees of a dollar a day while you were in jail here for the purpose of testifying in this case?" It is elementary that a witness may be cross-examined touching his pecuniary interest, if any, in the event of an action. Nothing, we apprehend, tends more strongly to destroy the credibility of a witness than to show that his testimony is or may be influenced by a pecuniary consideration. As stated by Mr. Jones in his valuable work on Evidence: "The cross-examination would be of little value if the witness could not be freely interrogated as to his motives, bias, and interest, or as to his conduct as connected with the parties or the cause of action; and there would be little safety in judicial proceedings if an unscrupulous witness could conclude the adverse party by his statements denying his prejudice or interest in the controversy." Jones on Evidence, § 829. Of course, there must necessarily be a limit to any cross-examination, and ordinarily the extent to which one should be pursued rests in the sound legal discretion of the trial court; but this does not justify the exclusion of all inquiry touching any matter which is recognized as affecting the credibility. It may be conceded that the witness in this case was shown to be an unchaste, immoral, and abandoned woman, but such a witness might be believed by a jury that would give no credence to a witness who proved to be testifying for a financial consideration. For the purpose of this discussion, it must be assumed that the witness would have answered the question in the affirmative. Then the fact would have appeared that she was promised $1 a day while in jail for testifying on the trial. It is unnecessary to determine whether or not the amount promised exceeded the fees to which she was lawfully entitled. She may or may not have known her legal rights in this respect. The question is, what effect did the promise have upon her testimony? This was a question going to her credibility, which was of the utmost importance, and upon which the jury were entitled to all the light obtainable by a reasonably extended investigation. The failure to allow any investigation along this line was not cured by other evidence, so far as we are able to discover. That the question was propounded in good faith appears from the affidavit of the clerk of courts, used on the motion for a new trial, wherein he states that a certificate was issued to the witness, on the order of the state's attorney, for $128, in payment of 128 days' attendance on the circuit court in this and another case. We have no doubt but that an investigation of this matter would show that the state's attorney's conduct was entirely proper. As heretofore suggested, that is not the question at issue. It is simply this: Did the witness understand that it was to her pecuniary advantage to testify in this case on behalf of the state, and did such understanding affect her testimony? This was a proper subject for inquiry on cross-examination, and we cannot escape the conclusion that the learned circuit court committed a reversible error in not permitting an answer to the question as propounded by the defense.

Elmer Sours, a witness for the defense, testified that he saw the prosecutrix and Lillian McCormick at the defendant's room on the day when the crime was alleged to have been committed; that they were standing six or eight feet from the defendant, looking through the window; and that he had a conversation with them. After several questions intended to bring out this conversation were ruled out, the following question was asked: "What, if anything, did they say to you at that time about having been robbed, within the hearing of the defendant?" To that question the state objected, and the objection was sustained. This ruling was, we think, erroneous. It was claimed by the accused that he gave the girls money because they stated they had been robbed. In corroboration of his testimony in this respect, it was, we think, relevant and material to show by other witnesses that the girls, at the time and place of the alleged crime, stated that they had been robbed. Indeed, all that was said and done by either the prosecutrix, the witness Lillian McCormick, or the defendant, while the girls were in the defendant's room, was clearly relevant and material as part of the res gestæ.

Numerous other errors are assigned, and questions discussed in the briefs of counsel, concerning which no opinion is expressed, as they merely involve the application of well-recognized rules of criminal procedure, and may not arise on a second trial. It may not be improper to observe that we would be more reluctant than we are to reverse the

Digitized by Google

judgment in this case, did it not so clearly appear that the jury failed to faithfully and intelligently discharge their duty. If they believed the witnesses for the state, they should have found the defendant guilty of rape; if they did not, they should have found him not guilty of any offense. We do not reverse for this reason, but cannot refrain from suggesting that upon the evidence in this case the verdict is not one which appeals to the legal mind as being worthy of the highest consideration.

The judgment of the circuit court is reversed, and a new trial ordered.

WENKE v. HALL et ux.

(Supreme Court of South Dakota. July 22, 1903.)

MORTGAGE FORECLOSURE — FINDINGS OF COURT—SUFFICIENCY—APPEAL —ERRORS—REVIEW.

1. Under Code Civ. Proc. § 303, subds. 2, 3, where a motion for a new trial is made on the bill of exceptions, the specifications of the particular errors of law, occurring at the trial, excepted to by the moving party, and the specifications of the particulars wherein the evidence is insufficient to support the findings of the trial court, must be contained in or annexed to the bill in order to present the questions for review in the Supreme Court, and the specifications of errors in the motion for a new trial are not sufficient.

2. Under Code Civ. Proc. § 303, subd. 4, when a motion for a new trial is made on the minutes of the court the notice of intention must specify the particulars in which the evidence is insufficient, and the particular errors of law on which the moving party will rely.

3. Where, in a suit to foreclose a mortgage given to secure the payment of certain notes, the court found the amount due, it was not required to find the precise amount paid on each note and when such payments were made, such a finding being a finding of evidence, and not of the ultimate fact.

4. A finding by the court, in a suit to foreclose a mortgage given to secure the payment of certain notes, that a payment was made by the debtor on a note at a particular date, which date was within six years of the commencement of the suit, was a finding that the action was not barred.

Appeal from Circuit Court, Meade County.

Action by John G. Wenke against Nelson A. Hall and wife and others. From a judgment for plaintiff, defendants Hall and wife appeal. Affirmed.

M. McMahon, for appellants. W. A. Stuart, for respondent.

CORSON, J. This is an action to foreclose a mortgage executed by the defendant Nelson A. Hall to the assignor of the plaintiff. Findings and judgment were in favor of the plaintiff, and the defendants Hall and wife have appealed.

The complaint is in the usual form. The defendants in their answer deny each and every allegation contained in the complaint, and plead the 6 and 10 years' statutes of limitations. They also plead payment in full, and that, in pursuance of an agreement with the plaintiff, the defendant Nelson A. Hall made payment, in road warrants, horses, and labor, to the amount of $784.55. The said defendant Nelson A. Hall, as a further defense and counterclaim, alleges that by mistake and inadvertence he paid the plaintiff, prior to the month of September, 1893, the sum of $257 over and above the amount due on the indebtedness alleged in the plaintiff's complaint, and demands judgment for that sum. To the counterclaim the plaintiff replied by a general denial.

The court found in substance that on the 1st day of November, 1889, the defendant Nelson A. Hall, then an unmarried man, executed and delivered to one Theodore Windhusen his certain promissory note for $450, payable November 1, 1890, with interest thereon at the rate of 12 per cent. per annum until paid, and that to secure the same he executed a mortgage to the said Windhusen, bearing even date therewith, on real property in the county of Meade, and that he also executed four $50 notes, as shown by the said complaint; that said mortgage contained the usual conditions, and was duly acknowledged and recorded; that the said notes, together with the said mortgage, were thereafter duly assigned to the plaintiff, who was at the time of the commencement of this action, and now is, the lawful holder and owner thereof; that on October 1, 1895, a payment of $10 was made to the plaintiff by the defendant upon said $450 note, and duly credited thereon; that there is now justly due the plaintiff on the said note and mortgage the sum of $625.83, including interest. The court concludes therefrom that the plaintiff is entitled to a judgment against said defendant Nelson A. Hall for the above sum, and that the mortgage be foreclosed and the property sold to satisfy the same.

It is contended by the respondent that there is nothing before this court to review, except the judgment roll, for the reason that the bill of exceptions contains no specification of the particular errors of law, occurring at the trial, excepted to by the defendant, nor any specifications of the particulars wherein the evidence is insufficient to support the findings of the court. This contention of the respondent seems to be sustained by the abstract. The abstract discloses no such specifications, other than those appearing in the motion for a new trial. In the motion there are certain specifications of errors of law, and also certain specifications of the particulars in which the evidence is claimed to be insufficient to support the findings. If the motion for a new trial was made on the bill of exceptions, the specifications referred to should have been contained in or annexed to such bill. Subdivisions 2, 3, § 303, Code Civ. Proc. If the motion was made on the minutes of the court, the notice of intention should have specified the particu-

¶ 1. See New Trial, vol. 37, Cent. Dig. § 278.

lars in which the evidence was alleged to be insufficient, and the particular errors of law upon which the appellants would rely. Subdivision 4, § 303, Code Civ. Proc. The rule as to what specifications are required in bills of exceptions and notices of intention to move for new trial, when the motion is made upon the minutes of the court, has been often stated by this court. Johnston L. M. Co. v. Case, 13 S. D. 28, 82 N. W. 90; Reagan v. McKibben et al., 11 S. D. 270, 76 N. W. 943; Tootle v. Petrie, 8 S. D. 19, 65 N. W. 43; Chandler v. Kennedy, 8 S. D. 56, 65 N. W. 439; Billingsley v. Hiles, 6 S. D. 445, 61 N. W. 687; Pierce v. Manning, 2 S. D. 517, 51 N. W. 332. Specifications in the motion, therefore, do not constitute a compliance with the law, and are not sufficient. The appellants having failed to comply with the provisions of the Code, the bill of exceptions must be disregarded.

The only question, therefore, presented for our consideration is, are the findings of the court supported by the pleadings, and do they substantially cover all the issues? In our opinion, the court found all the ultimate facts necessarily raised by the pleadings. As we have seen, it found that the defendant Nelson A. Hall executed the notes and mortgage, and was at the time an unmarried man; that the same were duly assigned by Windhusen to the plaintiff; that on October 1, 1895, there was a payment of $10 made to the plaintiff by the defendant upon said note and duly credited thereon; and that there was justly due the plaintiff from the defendant Hall, for principal and interest, the sum of $625.83.

The contention of the appellants that it was the duty of the court to find the precise amount paid upon each note, and when paid, etc., is untenable. Such a finding would constitute a finding of the evidence, and not the ultimate facts.

It is further contended by the appellants that the court should have found whether or not the notes were barred by the statute of limitations. The court does find the fact that a payment was made upon the note on October 1, 1895, and concludes that there is due the plaintiff the sum above specified. It being found by the court that the payment was made at the time specified, it follows that the note was not barred by the statute as a conclusion of law, as six years had not elapsed after the last payment before the action was commenced. The court, therefore, found in effect upon all the issues raised by the pleadings.

It is further contended by the appellants that the findings of fact were not filed by the court prior to the entry of judgment, but this contention is untenable, for the reason that the abstract shows that they were filed on the 9th, and the judgment entered on the 10th, day of January, 1902.

Finding no error in the record, the judgment of the court below is affirmed.

ROBESON v. DUNN et al.

(Supreme Court of South Dakota. July 22, 1903.)

TRUST DEEDS—POWER OF TRUSTEE.

1. The trustee in a trust deed to secure a loan has such powers as mortgagees usually possess.

Appeal from Circuit Court, Brown County.

Action by Louis Robeson, administrator of William R. Robeson, deceased, substituted as plaintiff by order of the court, against J. M. Dunn and others, to set aside an alleged fraudulent release of a trust deed, and to foreclose it. Judgment for plaintiff. Defendants appeal. Reversed.

L. W. Crofoot, for appellants. Gamble, Tripp & Holman, for respondent.

FULLER, J. So far as material to the questions of law presented, the facts and circumstances before us on this appeal are not in the slightest degree distinguishable from Pickford v. Peebles et al., 7 S. D. 166, 63 N. W. 779. That case is consistent with our former decisions, and has become a rule of property in this state. In this instance, as in the Pickford Case, J. M. Dunn loaned his own money, and performed every act relating to the execution and delivery of the notes and purported trust deed. Respondent's title thereto was acquired by indorsement made by J. M. Dunn, in the name of P. M. Dunn, whom he chose to name as payee, and for whom he ostensibly acted while transacting business for himself. Under our statute, a trust deed given to secure a loan conveys no title whatever; and the creditor selects the trustee, whose legal status, in cases like this, is that of a mortgagee invested not only with the power of sale, but such other powers as mortgagees usually possess. By a studious review of every question argued, we are given further assurance that in our former decision the rights of the parties were correctly considered and determined in the light of well-established principles of equity. Even though we considered the case unsound, it should not be disturbed after it has remained undisputed for so long a time, and titles have become vested on the strength of it.

The judgment appealed from is reversed.

FARMERS' LOAN & TRUST CO. v. HASTINGS et al.

(Supreme Court of Nebraska. Jan. 8, 1902.)

MUNICIPAL CORPORATIONS—SPECIAL ASSESSMENTS—APPEAL—REVIEW—BRIEF OF COUNSEL.

1. Statutory provisions as to the manner of levying special assessments must be strictly complied with.

2. On appeal this court is not bound to pass upon questions not fairly raised in the briefs of counsel for appellant.

3. Where several special assessments were found to be invalid in the lower court, and the

validity of such assessments depends upon statutes now repealed, so that to pass upon them will require a minute investigation of documentary evidence and laborious search for the several statutes applicable thereto, assertions in appellant's brief that such assessments are valid, and are shown by the proof to be valid, without stating any reasons for such opinion, or affording any material assistance to this court towards verifying it, do not require review of such findings.

Commissioners' Opinion. Department No. 2. Appeal from District Court, Douglas County; Fawcett, Judge.

"Not to be officially reported."

Action by the Farmers' Loan & Trust Company against Byron R. Hastings and others. Judgment for defendants, and plaintiff appeals. Affirmed.

W. A. Saunders, for appellant. Wm. D. Beckett and J. W. Woodrough, for appellees.

POUND, C. Appellant is here complaining of a decree in a suit to foreclose certain tax liens, wherein the court granted the relief prayed for as to the general taxes set up in the petition, but found a number of special municipal assessments, under which liens were claimed, to be invalid, and denied foreclosure therefor. In appellant's brief four propositions are laid down, with two of which we can have no quarrel. That the plaintiff may include in his suit as many tracts of land upon which he claims a lien as the defendant may own, and that his suit is not barred by limitation till the expiration of five years from the period of redemption as fixed by statute, we do not doubt. But we find nothing in the findings or decree of the lower court running counter to these rules in any way. With respect to the further propositions advanced, that a certificate of tax sale is prima facie evidence of the regularity and validity of all taxes, both general and special, included in the sale, and that "in an action for the foreclosure of a tax certificate technical defenses will not be considered," we must make certain distinctions. This cause arose before the recent provisions of municipal charters in this state as to sales for special assessments, and is to be governed by the decision in Leavitt v. Bell, 55 Neb. 57, 75 N. W. 524. In that case the court said: "Where a lien is sought to be enforced or foreclosed for general taxes, then, doubtless, the presumption is that the statutes in reference to the levy and assessment of these taxes and the sale of real estate for their nonpayment have been complied with; and the burden of showing irregularities, or that such a tax is void, is upon the party asserting the fact. Adams v. Osgood, 42 Neb. 450, 60 N. W. 869. But no such presumption can be indulged in when a lien is sought to be enforced against real estate for a sale made thereof for the nonpayment of special taxes or assessments. In such a case, he who asserts the lien and seeks to enforce it has the burden of showing the validity of the tax lien. Smith v. City of Omaha, 49 Neb. 883 [69 N. W. 402]." It has been repeatedly held, also, and is well settled, that the several provisions of the statutes with reference to special assessments must be strictly adhered to, and that such assessments are invalid if not levied in full compliance therewith. Batty v. City of Hastings (Neb.) 88 N. W. 139, and cases cited.

It appears from the pleadings that the several special assessments involved were levied at various times and for various purposes under different provisions of statutes not now in force. To pass upon their validity, in view of the well-settled rule already stated, requires minute investigation of documentary evidence and laborious search for the several statutes and sections of statutes applicable thereto. This court, as it has often said, is not bound to pass upon questions not fairly raised in the briefs of counsel for appellant. To raise a point in a brief is to do something more than to make a bare assertion that a finding or a ruling of the district court is wrong. Where the matter is so simple that the ruling speaks for itself or the mere statement of the finding condemns it, no more may be requisite. But where statutes not now in force are to be examined, sections thereof not readily accessible, and dealing with matters not of ordinary occurrence, are to be referred to, and critical examinations of records and proceedings in the light of such statutes is to be had, it will not do to stop with a statement of counsel's opinion that the finding or ruling is wrong. The brief states that the special assessments in question are valid, and that they are shown to be valid by the proof. But it does not refer us to the statutes involved, says nothing whatever as to the reasons stated in the decree as those upon which the lower court found to the contrary, and, in fact, affords us no material assistance toward verifying such opinion. We do not think we ought to be asked to review the findings in question under such circumstances.

Nevertheless, being unwilling to refuse a party relief to which he may be entitled, upon what might be thought hypertechnical grounds, we have examined the notices which the lower court held indefinite and insufficient, and are of opinion that the decree is right. In one case the record shows that the board of equalization acted at another and different time from that specified in the notice, and as to all of the notices, without examination of other documents, it is wholly impossible for the reader to ascertain what property is affected or who is intended to be notified. Such documents are not referred to in the notices, and we are satisfied that they conveyed no actual notice of what was proposed to any one who read them.

We recommend that the decree be affirmed.

OLDHAM and SEDGWICK, CC., concur.

Affirmed.

Digitized by Google

LEIDIGH v. KEEVER.

(Supreme Court of Nebraska. Jan. 8, 1902.)

COMPROMISE AND SETTLEMENT—SETTING ASIDE.

1. Where a settlement is entered into between two parties in reliance on the accuracy and correctness of books of accounts kept by one of the parties, and it is subsequently discovered that the books have been erroneously kept, and that the party keeping them has not accounted for all the money which he has received, such a settlement will be set aside and a new accounting had, although there may have been no intentional fraud practiced by the bookkeeper, and the failure to account may have been due to mistakes alone.

Commissioners' Opinion. Department No. 2. Error to District Court, Lancaster County; Holmes, Judge.

"Not to be officially reported."

Action by John H. Keever against George W. Leidigh. Judgment for plaintiff. Defendant brings error. Reversed.

Broady & Pettis, for plaintiff in error. Burkett & Greenlee and Wright & Stout, for defendant in error.

OLDHAM, C. This was an action in which the plaintiff alleged, as his first cause of action, that the defendant was indebted to him in the sum of $1,001.54 for balance due for services rendered by the plaintiff for the defendant from the 3d day of March, 1893, to the 10th day of April, 1896, at the agreed price of $1,000 per year; and, as a second cause of action, plaintiff alleged that the defendant was indebted to him in the sum of $300 for money loaned by him to the defendant. Defendant answered the allegations in the first count of plaintiff's petition, and admitted that plaintiff had performed services for the defendant at the times alleged in plaintiff's petition, but denied that he had ever agreed to pay plaintiff at the rate of $1,000 per year, or any other fixed price, for the services so rendered, and alleged that plaintiff's services were not worth to exceed the sum of $50 per month. Defendant further alleged that during the first two years of plaintiff's employment plaintiff was engaged in conducting and managing the ice business for the defendant in Nebraska City, Neb.; that plaintiff kept the books and accounts and collected the proceeds of such business during the time he was so employed; that at the end of each year that plaintiff was so employed in the ice business for the defendant they had a settlement in full of their accounts, and in such settlement plaintiff received all that his services were reasonably worth, and all that he claimed of defendant for his services. Defendant further alleged that, during the last year that plaintiff was employed by the defendant, plaintiff managed defendant's farm, and was paid in full for his services by a portion of the crop raised on defendant's farm. Defendant also alleged that, at the time he made the settlement with plai tiff for services rendered by plaintiff in th ice business, he relied on plaintiff's stat ments that his books of account had bee properly kept, and that after making suc settlements he discovered, by an inspectio of the books, that plaintiff had misrepresen ed the accounts, and that he had collect a large sum of money from the ice busine which he had retained and had not charg to himself on the books. Defendant, f answer to the second count of plaintif petition, admitted that he had borrow $300 from the plaintiff, alleged that he ha paid $125 of this money back before he ha discovered that plaintiff had deceived hi in the manner in which he had kept t books and accounts, and admitted that plai tiff was entitled to credit, for the remaind of the money so loaned, on defendant's cou terclaim. Plaintiff replied to this answe denying that he had misrepresented the a counts of defendant's ice business, or th he had made any false entries in the boo of said business, or had been guilty fraud or concealment in the accounts of sa business. He admitted that he had agreement with the plaintiff as to the amou due him at the end of each of the first tw years of his employment, but denies th such amount was paid him, and alleges th the amount mutually agreed upon as due plaintiff was the same as that charged the first count of plaintiff's petition. The was a trial to a jury, and verdict for plai tiff for the sum of $1,423.73, and judgme was rendered on the verdict, and defenda brings error to this court.

It will not be necessary to discuss each the numerous assignments of error charg in the petition, in view of the conclusi which we shall reach. An examination the answer, which has been but briefly sur marized in our statement of the issues, lea us to the conclusion that it (the answer) ad ed an unnecessary and useless complicati to the facts in controversy in the case, a that the confusion of issues tendered by t answer was further mystified by the repl

A careful examination of the pleadin shows that neither of the contending parti relied on a settlement either as a basis the action or the ground of defense. Plai tiff in his petition alleged on a balance d on a contract, and not on an account state While defendant in his answer sets up tw settlements which he alleges were had b tween himself and plaintiff, yet he immed ately follows these allegations with ave ments of fraud and mistake, in the accoun of plaintiff, sufficient to avoid the effect the settlements pleaded. Plaintiff's reply this answer, technically construed, chang his first cause of action from a suit on contract to an action on an account state All the confusion is with reference to th issues tendered in the first count of the p tition—there is no trouble or complaint wit

¶ 1. See Compromise and Settlement, vol. 10, Cent. Dig. § 73.

Digitized by Google

reference to the issues tendered on the second count.

The evidence introduced by plaintiff tended to show a contract with the defendant for services rendered at an agreed salary of $1,000 per year, and a balance due as charged in the first count of the petition. There was no dispute as to the second count of the petition, except as to the amount the defendant claimed to have paid on the loan, and, as we have seen, this was properly submitted. The testimony offered by defendant tended to show that plaintiff was only to receive such an amount as his services were reasonably worth during the time that he conducted defendant's ice business, and that plaintiff was paid for his services on the farm by a share of the crop raised.

Defendant also introduced evidence strongly tending to show that plaintiff had collected a large amount of money from the ice business, which, either by mistake or with fraudulent intent, he had failed to charge himself with on the books which he kept. While there was evidence offered by plaintiff tending to contradict this testimony, yet this evidence was in the record, and should have been submitted under a proper instruction to the jury. The defendant requested an instruction which, we think, would have properly submitted this question to the jury. This instruction was refused by the court, and in lieu thereof the court gave paragraph eight (8) of instructions on its own motion. This instruction, after properly defining the effect of fraud or mistake on a settlement, contains the following statement: "And it must further appear that the plaintiff made such false and fraudulent representations as to the books of account so kept by him, knowing them to be false, and made them with intent to deceive the defendant, and that the defendant relied thereon, and entered into such settlements upon the faith and in the belief that such statements and representations so made were true." We think that this portion of the instruction is clearly erroneous, in that it places the burden on the defendant of showing that plaintiff knowingly and intentionally falsified his books. If, as a matter of fact, plaintiff had received money from the defendant, or from the defendant's business, and had failed to charge himself with this money, no matter whether he did so ignorantly or intentionally, he should now account for this money, and the fact that plaintiff may not have known of the mistake in his books at the time he attempted to settle with the defendant should not excuse him from making his accounting.

In North Nebraska Fair and Driving Park Ass'n v. Box (Neb.) 77 N. W. 770, in discussing this principle, Harrison, C. J., speaking for the court, says: "The party who rendered the report or account which formed the basis of the adjustment between him and the association knew all the facts, but he did not impart them to the other party. This being true, the adjustment was made under a mistake, even if the element of fraud was absent, and the association could go back of it and collect the amounts due."

As this cause must be tried again on account of the error of the trial court just commented upon, we think it well to suggest that paragraph three (3) of instructions given by the court, as we regard it, fails to clearly define the issues arising on the answer and reply. We think, however, that this confusion of issues might be avoided if, on a new trial of this cause, an amended answer should be filed by the defendant from which settlements not relied on by either party as binding were entirely eliminated, and in which the defendant would present by way of set-off his claim for moneys alleged to have been collected by plaintiff and not accounted for by him.

It is therefore recommended that the judgment of the district court be reversed, and the cause remanded for a new trial.

POUND and SEDGWICK, CC., concur.

Reversed and remanded.

OMAHA BREWING ASS'N v. TILLENBURG.

(Supreme Court of Nebraska. Jan. 8, 1902.)

APPEAL — REVIEW — CASE TRIED TO THE COURT—PLEADING—CONVERSION—ACTION FOR PRICE.

1. Where a cause is tried to the court, and there is a general finding for the plaintiff, if any cause of action is stated, and there is evidence thereon sufficient to sustain the finding, it will be presumed that the court proceeded thereon, and the judgment will be affirmed, although the petition attempts also to state a cause of action of a different nature, which would not sustain a recovery.

On Rehearing.

2. The facts stated in the petition set out in the opinion *held* insufficient to constitute a cause of action.

Commissioners' Opinion. Department Nos. 2, 3. Error to District Court, Madison County; Robinson, Judge.

"Not to be officially reported."

Action by H. Tillenburg against the Omaha Brewing Association. Judgment for plaintiff, and defendant brings error. Reversed.

Allen & Reed, for plaintiff in error. Powers & Hays, for defendant in error.

POUND, C. The petition alleges, in substance, that the plaintiff, Tillenburg, sold and delivered to the Omaha Brewing Association, defendant, certain saloon furniture, bar fixtures, and stock, and as part payment took the promissory note of one Semler for $625, which the defendant procured to be executed; that the note is past due and unpaid; that the defendant upon request has failed to pay it; and that it cannot be collected of Semler, who is insolvent. It is further alleged that

Digitized by Google

at the time of the sale the defendant agreed to secure the Semler note, and did secure it, by giving a lien on the property sold, evidenced by a written agreement recited in the petition and hereinafter described; that afterwards the defendant took possession of said property and sold it without plaintiff's consent, and converted the proceeds; and that the property was of the value of $10,000. The written agreement referred to, after reciting the acceptance of the Semler note as part payment, provides that "if said Semler fails or refuses to pay said note or any part thereof * * * said Tillenburg shall be secured by the contract between the Omaha Brewing Association and H. Semler, in the same way as the Omaha Brewing Association, according to their respective claims." It is not easy to say from this petition nor from the brief of counsel for Tillenburg whether it is intended to state a cause of action for conversion of property upon which the latter had a lien or for recovery of the balance of the purchase price, the note taken as conditional payment being uncollectible. The plaintiff in error takes the former view, and, if such is the theory on which the judgment was rendered, we do not think it can stand. There is no allegation that there was any contract between Semler and the defendant, nor as to the manner in which defendant was secured. The agreement recited provides that plaintiff and defendant shall be secured "in accordance with their respective claims," evidently contemplating an apportionment of the security pro rata. But it is not alleged whether there was or was not money owing from Semler to the association, nor is there anything to show to what portion of the whole security plaintiff was entitled. It is very doubtful, therefore, whether the petition, as far as any cause of action for conversion is concerned, will sustain the judgment rendered. However this may be, the evidence is clearly insufficient. The defendant's agents and officers deny positively that they ever had any contract or agreement with Semler by way of security or any other security. Semler testifies vaguely to some sort of instrument, but his testimony is confused and uncertain, not only as to its terms and nature, but as to its very existence. It appears that Semler owed the defendant $500 or $600 at the time of the alleged conversion, and, as the property did not bring much more than this, if the defendant had held a mortgage or lien of some sort plaintiff, under his agreement, could only have benefited in proportion to the "respective claims," which would not permit recovery of much more than half the sum awarded him. But we do not think this the only possible view as to the nature of the cause of action. Trial was had to the court, and a general finding was rendered for the plaintiff. Hence we cannot be certain on what theory the judgment proceeds. If any cause of action is stated, and there is evidence thereon sufficient to sustain the findings and judgment, the presumpti is that the lower court proceeded upon it, a it is our duty to affirm such judgment. T allegation of further facts tending to sh a distinct cause of action of another natu so long as no motion was made for separ statement and no questions as to misjoin are now before us, would not be material. good cause of action is stated for the bala of the purchase price. A sale to the defe ant is alleged, the taking of the Semler n in part payment, and the nonpayment the of and insolvency of Selmer. Obviously note, executed, as it is alleged, at the p curement of defendant, and taken under express agreement to see it paid, was o conditional payment, and if it remained paid plaintiff could recover on the origi indebtedness. National Life Ins. Co. v. ble, 51 Neb. 5, 70 N. W. 503. We do not that any additional allegations were nee to show a cause of action of this sort. evidence as to who was vendee in the sal conflicting, but sufficient to sustain a find for plaintiff. Defendant's agent testifies. he is corroborated by one of the chief offic of the association, that plaintiff sold direc to Semler, and that defendant's agent me assisted in getting the purchaser and in c ducting the negotiations. The plaintiff te fies positively that he sold to the defenda that the defendant put Semler in under s agreement of its own with the latter; that refused to take Semler's note or look to S ler; and that defendant's agent told him could rely on the association for his mon and that it would allow him the benefit the security given it by Semler. Seml evidence is inconclusive and uncertain, much of it goes to corroborate plaintiff. T other witnesses, present at the negotiatio testify that the defendant, not Semler, vendee. The language of the agreement pears to indicate the contrary, and there circumstances on both sides. Taking the timony as a whole, we think a trier of might fairly find that there was a sale to defendant, that the Semler note was taken conditional payment, and, as that note is collectible, that plaintiff should recover. petition, as has been seen, set up facts s cient to permit recovery on such findi The only errors argued are that the petit fails to state a cause of action, and that finding and judgment are contrary to the dence. We are not bound to examine other assignments. It is therefore rec mended that the judgment be affirmed

OLDHAM and SEDGWICK, CC., concu

Affirmed.

On Rehearing.

(Oct. 22, 1902.)

ALBERT, C. This case is before us rehearing. The former hearing was bef

another department, whose opinion was filed January 8, 1902, but not reported. In the district court there was a finding and judgment for the plaintiff (the defendant in error). The defendant brings error.

The principal question presented by the record is whether the petition filed in the district court states a cause of action. The petition is as follows:

"The plaintiff complains of the defendant, the Omaha Brewing Association, and for cause of action alleges:

"(1) That on the 2d day of February, 1893, the plaintiff sold and delivered to the defendant, the Omaha Brewing Association, certain saloon furniture, bar fixtures, and stock for the sum of $1,375.00, and as part payment therefor the defendant procured to be executed and delivered to plaintiff one certain promissory note of the defendant Henry Semler, which note is in the words and figures following: '$625. Norfolk, Neb., Februy 2nd, 1893. On or before August 1st after date for value received I promise to pay to the order of H. Tillenburg six hundred and twenty-five dollars with interest at the rate of seven per cent. from date until paid. Henry Semler.' No part of said sum mentioned in said note has been paid, although long since past due, and there is now due and unpaid thereon the sum of $625, and interest at the rate of 7 per cent. per annum from February 2, 1893, and the defendant, the Omaha Brewing Association, though requested, has not paid the same or any part thereof, and plaintiff has been unable to collect said note from said Semler, who is insolvent.

"(3) The defendant, the Omaha Brewing Association, at the time of purchasing said saloon furniture, bar fixtures, and stock, agreed with the plaintiff, in consideration of plaintiff taking the said Semler note as part payment for said property so sold, to secure the said note to plaintiff, and thereupon agreed to and did secure the same by giving the plaintiff a lien upon the said property so sold to insure the payment of said note. The instrument evidencing said lien is hereto attached, and marked 'Exhibit A.'

"(4) The defendant, the Omaha Brewing Association, thereupon took possession of said property so sold, and upon which it had given the plaintiff a lien to secure the payment of said note; and thereupon, and without the consent of plaintiff, sold said property, and converted the proceeds thereof to its own use and benefit, which property was of the value of $1,000; and said defendant has neglected and refused to pay said sum of money evidenced by said note or any part thereof, although requested so to do. Wherefore plaintiff prays for judgment against the defendant, the Omaha Brewing Association, for the sum of $625, with interest thereon from February 2, 1893, at the rate of 7 per cent. per annum, and costs of suit."

Exhibit A, referred to in the petition, is as follows:

"[Exhibit A.]

"Whereas, H. Tillenburg has this day sold his saloon to H. Semler; and whereas, said Tillenburg has accepted for said saloon one certain promissory note of $625 signed by said H. Semler as part payment.

"Now if said Semler fails or refuses to pay said note or any part thereof, it is agreed hereby that said Tillenburg shall be secured by the contract between the Omaha Brewing Association and H. Semler, in the same way as the Omaha Brewing Association according to their respective claims.

"Norfolk, February 2nd, 1893.

"Omaha Brewing Association,
"Per Henry Heubens."

It is not easy to determine, from the petition just set out, whether the plaintiff sought to recover for a conversion of the property on which he alleges he had a lien, or for the balance due on the original consideration for which the property was sold. As to the former, the petition is clearly insufficient. The only allegation tending to show that the plaintiff had a lien on the property is that the defendant secured the note by giving a lien on the property, and that such lien is "evidenced" by Exhibit A. There is no allegation of the existence of any contract between Semler and the defendant. The plaintiff insists that the defendant, having made the contract evidenced by Exhibit A, is estopped to deny the existence of the contract between itself and Semler therein mentioned. The answer to this is that it is not alleged that Exhibit A was executed by the defendant. The mere fact that it is attached to the petition, and purports to have been signed by the defendant, tenders no issue, and falls far short of charging the defendant with its execution. The only allegation, then, that the plaintiff had any lien or interest in the property, is that the defendant gave him a lien thereon. Such allegation, standing, as it does, without any statement of the facts showing a contract between the parties whereby such lien was created, is a mere conclusion, and of no issuable value. Cooper v. French, 52 Iowa, 531, 3 N. W. 538; Esch v. White (Minn.) 85 N. W. 238; Bloomington Min. Co. v. Searles (N. J. Sup.) 49 Atl. 543; Bush v. Coler (Sup.) 69 N. Y. Supp. 770.

That the petition does not state a cause of action on the original consideration to our minds is equally clear. We recognize the rule that the note of a third party, given in settlement of a debt, does not operate as a payment of such debt, in the absence of an agreement to that effect. Berry v. Griffin, 69 Am. Dec. 123. But, in our opinion, the facts pleaded do not bring the case within that rule. Its application is limited, we think, to cases wherein the note is a separate and independent transaction. In this case it was contemporaneous with and a part of the contract of sale. The petition, taken as a whole, does not show an agreement on the part of

Digitized by Google

the defendant to pay $1,375 for the property. On the contrary, it shows an express agreement that $625 of that amount, the face of the note, was to be paid by Semler. He was not a third party, in the sense of being a stranger to the contract of sale, but was a party to it, as shown by his agreement to pay a part of the consideration. To hold the defendant liable for that part of the consideration which the parties had agreed should be paid by Semler would be to make a new contract, and to impose a burden on the defendant which was not within the contemplation of the parties when the contract was made.

In our opinion, the petition wholly fails to state a cause of action. In this view of the case, it is unnecessary to consider the other assignment relied upon relating to the sufficiency of the evidence.

We recommend that the judgment of the district court be reversed, and the cause remanded for further proceedings according to law.

AMES and DUFFIE, CC., concur.

Reversed and remanded.

CARSON v. MURPHY et al.

(Supreme Court of Nebraska. July 10, 1901.)

FRAUDULENT CONVEYANCES—EVIDENCE.

1. Evidence examined, and *held* to sustain district court's finding that the transfers complained of as fraudulent rested upon a valuable consideration, and were a sale, and not a gift.

Commissioners' Opinion. Department No. 1. Appeal from District Court, Lancaster County; Holmes, Judge.

"Not to be officially reported."

Action by John L. Carson against Sydney V. Murphy and others. Judgment for defendants, and plaintiff appeals. Affirmed.

J. H. Broady, for appellant. Tibbets Bros. and Morey & Anderson, for appellees.

HASTINGS, C. February 20, 1897, plaintiff filed a petition alleging that he recovered a judgment against Sydney V. Murphy, Albert W. Jansen, and Louie Meyer for $1,220.50, and $20.11 costs, at the October term of the Lancaster county district court; that the indebtedness on which it was rendered was contracted April 14, 1893; that Murphy, Jansen, and Meyer are apparently insolvent, and have no property subject to execution; that March 30, 1895, Sydney V. Murphy conveyed lots 21, 22, and 20, in block 2, lot 11, in block 3, and the south 141 feet of lots 13 and 14, in block 6, all in East Park addition to Lincoln; lots 1, 2, 3, 4, 5, and 6, in block 10, Second Park addition to Lincoln; lots 7 and 18, in block 5, Ingleside addition; lots 3, 4, and 5, in block 6, in Houtz's addition; lot 3, in block 135, in Lincoln—to May Jansen, without consideration, and for the purpose of defrauding creditors, as May Jansen well knew; that Sydney V. Murphy recovered a judgment, July 1, 1893, against Canfield, Kitchen, and Gillilan for $1,915.25, which is still in full force, except that the sum of $369.45 was paid on it February 27, 1894; that March 30, 1895, she assigned this judgment to May Jansen, without consideration, and for the purpose of hindering and defrauding creditors, as May Jansen well knew; that on January 13, 1896, Albert W. Jansen became, by purchase or exchange, the owner of the south half of the south-west quarter of section 13, town 9, range 6, and for the purposes of hindering, delaying, and defrauding his creditors caused the same to be conveyed to the defendant May Jansen without consideration from her; that execution was issued on plaintiff's judgment March 20, 1896, and returned, "No property found;" that August 13, 1896, another execution was issued and levied on the real estate mentioned, but it could not be sold because of the conveyances; that the judgment against Canfield, Kitchen, and Gillilan cannot be secured by garnishment proceedings because of the fraudulent assignment; that defendant May Jansen is the daughter of Sydney V. Murphy and the wife of Albert W. Jansen. The petition asked that all of the property be subjected to the payment of plaintiff's judgment.

The defendant May Jansen answered that she was the owner of the property described in plaintiff's petition; that she purchased it in due course of business, and for a full consideration; and denied the remainder of plaintiff's allegations.

There was a reply by general denial, and on the trial the court found for the defendants as to plaintiff's petition.

There was another set of issues in the case made up of cross-petitions by attorneys claiming liens on the judgment as to which the assignment is attacked, but those matters have been adjusted. The matter of the various lots described it is hardly worth while to go into, as the lots are not claimed to be of any value in excess of the delinquent taxes against them, and it is only necessary to examine here so much of the evidence as relates to the assignment of the Canfield, Kitchen, and Gillilan judgment, and the 80 acres of land conveyed to the defendant May Jansen in 1896 by one Hitchcock.

With regard to the latter, it is not seriously contended that upon the showing made the plaintiff is entitled to any relief. It appears that some time during the 80's Albert W. Jansen, husband of May Jansen, became grantee in a railroad land contract covering some land in Greeley county, and in the year 1889 the contract was transferred to Mrs. Jansen; that she kept up the payments, and in 1895 procured the deed for it, and in 1896 this Greeley county land was traded to Leverett L. Hitchcock for an equity in the south half of the south-west quarter of section 13, town 9, range 6 east. This last transaction

Digitized by Google

seems to have been entered into by the defendant May Jansen on her own behalf, and to be an entirely regular and businesslike transaction, for her own interest, and without any reference to her husband's creditors. There seems no reason to interfere with the court's conclusions as to this land.

It is insisted in behalf of plaintiff that the assignment of the judgment recovered by Mrs. Sydney V. Murphy, July 1, 1893, against Mary Canfield et al., originally for $1,915.25, and with $367.45 paid, should be set aside, and the judgment decreed to be held in trust for the payment of the Louie Meyer note held by plaintiff. The facts seem to be, briefly, that in 1875 William Murphy failed in business in Dallas, Tex. The family was then living in some property in that city owned by Mrs. Sydney V. Murphy. The daughter May Murphy, subsequently May Jansen, obtained employment as a teacher, and during the following five years was so employed, receiving wages from $125 to $150 per month. She testifies that her wages, and some earnings further as a singer in a church, were applied to the support of the family and education of a younger child, during all those years, with an understanding that she was to be repaid when repayment became possible, and especially when the homestead property in which the family lived at Dallas should be sold. In 1880 she was married to Albert W. Jansen, and removed to Quincy, Ill. Two years later she removed with her husband to Lincoln, where the latter engaged in the furniture business, and Mrs. Jansen seems to have engaged in dealing in real estate on her own account shortly afterwards. In 1885 the parents removed from Dallas to Lincoln, and in 1887 sold the Dallas property, and realized $19,000. This money was invested in Lincoln property in the mother's name; $10,000 of it in a home for the family, and the rest of it in contracts for city lots. This was with Mrs. Jansen's knowledge and without any assertion of a claim. The real estate investments proved unfortunate, and finally, in 1890, the home property was mortgaged for $5,000, and from that time the testimony of May Jansen and her mother, and as far as it goes of her father, William Murphy, is to the effect that Mrs. Jansen kept up the interest upon the mortgage on the home as long as it was kept up, about three years, and furnished practically all of the living expenses of the father, mother, and a younger sister. No account seems to have been kept of these disbursements on the parent's account, and no definite statement is made by any of the parties as to the precise amount of the advances. It does not appear that any settlement was had, but about the time that the plaintiff Carson began to be urgent for settlement of his note of $1,000, given April 14, 1893, and payable to the order of L. Meyer, Mrs. Murphy became persuaded that she had practically nothing left; that the incumbrances upon her other real estate were sufficient to absorb it; and she testifies that she thought the transfer of the lots and the Canfield judgment was her only means to repay what her daughter had advanced. Accordingly, March 30, 1895, she assigned to Mrs. Jansen her judgment against Mary J. Canfield et al., on which was then due something over $1,700, and on the same day conveyed the numerous lots, before mentioned, in various additions to Lincoln. William Murphy claims not to have much knowledge of the arrangement; that his wife had become dissatisfied with the management of her property; and in answer to a suggestive question of counsel in one place says that the property was conveyed to Mrs. Jansen in the expectation that she would handle it according to the wish of her mother and for her mother's benefit. He, however, agrees substantially with his wife and daughter as to the transactions that had taken place between Mrs. Jansen and her mother, as to Mrs. Jansen's contributions to the support of the family. The nominal consideration for the deed for the lots is placed at $4,500. That valuation is testified to by Mrs. Murphy as having been placed upon them, because that was what the property had cost. She had been for years trying to sell them at any price, and it appears that the family had concluded that there was nothing to be got out of them, and it was conceded at the hearing that these lots are to-day hardly worth redeeming from tax sales. No consideration for the assignment of the judgment is named. It was apparently all one transaction. Mrs. Murphy continued to exercise some supervision and assume control of the property and judgment, and went so far as in 1896 to contract for a lawyer's fee of one-half for the collection of the judgment, but withdrew the contract, as appears, because of her daughter's objection.

The question to be determined in this case is simply whether advancements of the kind described here, without any definite agreement for payment, constitute a sufficient consideration for a transfer in bulk of all of Mrs. Murphy's available property to her daughter on March 30, 1895. It is not contended seriously that the trial court was not correct in holding that advances of an amount sufficient to cover the actual value of the property transferred, if not to the full, nominal amount of the conveyances, were made. The lawyers who attended to the litigation by which the transferred judgment was obtained testify: the father, who is now removed from the influence of his wife and daughter, is examined; and the whole mass of testimony leaves it practically certain that advancements of money to the amount of from $2,000 to $3,000, at least, were made by Mrs. Jansen to her mother from 1890 to 1895. It is true no settlement was made, and no definite time of payment fixed, and no accounts kept.

Digitized by Google

The real contention of plaintiff is not that the decision of the trial court that these advancements were made is untrue. It is rather that they are shown by the surrounding circumstances not to have been made in such a way as to constitute a real debt, and not really made with the expectation or intention of payment on either side. Granting that the Dallas claim of moneys put in from 1875 to 1880 is too old and indefinite, the court was amply warranted in finding that from 1890 up to the time of these conveyances, on March 30, 1895, Mrs. Jansen had advanced her mother more than the value of this property. That this was with any definite expectation of repayment is not so clear. The daughter, however, stands upon the same footing as a stranger, except as to the quantum of evidence to establish the consideration for her claim. Dunn v. Bozarth, 59 Neb. 244. It would seem that there is no occasion to disturb the trial court's conclusion that the transfer of this judgment and of these valueless lots rested upon a valuable consideration, and was a sale, and not a gift.

It is therefore recommended that the judgment of the district court be affirmed.

DAY and KIRKPATRICK, CC., concur.

Affirmed.

HOFFMAN v. AMERICAN EXCH. NAT. BANK.

(Supreme Court of Nebraska. Dec. 18, 1901.)

BANKS—PAYMENT OF DRAFT TO IMPOSTER—LIABILITY TO DRAWER—BONA FIDE PURCHASER.

1. Where A., on receipt of release, made at A.'s request, of all claim against an estate, and purporting to have been made by B., procures a draft to his own order, indorses it to B.'s order, and sends it by mail to the address given him as B.'s, and it is there received by the person executing the release, and indorsed in B.'s name, A. has no right of action against a bank which pays the draft to the holder, supposing him to be B., though he is in fact an imposter.

On Rehearing.

2. Where an imposter assumes the name of another person, and thereby induces a third person to believe he is the person whose name he has assumed, and, acting on such belief, such third person indorses a draft, designating the payee by the name assumed by the imposter, and delivers it to such imposter in the belief that he is dealing with the person whose name has been assumed, and the imposter indorses the draft, using such assumed name, and transfers it to an innocent purchaser, the purchaser takes title by such indorsement.

Commissioners' Opinion. Department No. 1. Error to District Court, Lancaster County; Holmes, Judge.

"Not to be officially reported."

Action by Christian S. Hoffman against the American Exchange National Bank. Judgment for defendant, and plaintiff brings error. Affirmed.

¶ 2. See Banks and Banking, vol. 6, Cent. Dig. § 736; Bills and Notes, vol. 7, Cent. Dig. § 994.

J. J. Boucher and Kelley & Brown, for plaintiff in error. Sawyer & Snell, for defendant in error.

HASTINGS, C. The question in this case is whether or not the defendant bank is liable to plaintiff for the amount of a draft to his order, procured at Elizabethtown, Pa., and indorsed to the order of Peter W. Brubaker, and sent by plaintiff to an imposter at Lincoln, Neb., who claimed to be Brubaker, and which was cashed for the imposter by the defendant bank. The plaintiff was acting as disbursing agent for the executor of an estate, from which one Peter W. Brubaker was entitled to receive $264.15. The plaintiff had made considerable exertions to find Brubaker for the purpose of making this payment, but had failed to do so. Plaintiff had made to Brubaker two previous payments from the estate—one paid by a draft sent to Illinois and receipted for by him, and one payment made to him in person at Elizabethtown, Pa., where plaintiff resides. With reference to this third and final payment plaintiff had written to Omaha and to Illinois, and received no response. He finally received a letter dated July 2, 1895, saying: "Lincoln, Nebr., July 2, 1895. Mr. C. S. Hoffman: I got a letter from my brother sade you wanted my address it is Peter W. Brubaker, Lincoln, Nebr." To this plaintiff replied as follows: "Elizabethtown, July 5, 1895. Mr. Peter W. Brubaker: This afternoon I received your letter. I have been writing around to the different places where you were before, but the letters came back. You will take the release before a notary public, sign and acknowledge and have some person to sign as witness, and then return it to me, and I will send you draft for your share, less expenses. Yours truly, C. S. Hoffman." The release was executed evidently to plaintiff's satisfaction, for on July 12th he sent the following letter: "Elizabethtown, July 12, 1895. Mr. Peter W. Brubaker, Lincoln, Neb. Your release to Jacob Risser executor of the will of Peter Oberholtzer, dec'd, came back all right. Inclosed you find draft No. 5774 for $264.15 which with $1.75 for the expense of release and draft is in full of your share in the final distribution of the estate. Please let me hear from you when you get this so that I know that all is right. Yours truly, C. S. Hoffman." The draft mentioned was cashed by the defendant bank; the recipient being identified as Peter W. Brubaker by the notary, Walter A. Leese, of Lincoln, before whom the release had been executed, and in whose care the final letter and draft were sent by the plaintiff. The evidence, however, shows conclusively that the Peter W. Brubaker who was entitled to this money was not in Lincoln at that time, but in Indiana. He says he received no money. Plaintiff has been called upon to pay it again. The draft cashed by the defendant bank was never indorsed by the Peter W.

Digitized by Google

Brubaker who was entitled to a share in the estate of which Hoffman was disbursing agent. The draft was, by the defendant, transmitted to a New York correspondent, and collected through it from the drawer at Elizabethtown, Pa. It was drawn to the order of C. S. Hoffman, by him indorsed payable to the order of Peter W. Brubaker. The district court found that the above facts did not show any liability on the part of the defendant bank, and rendered judgment accordingly. That judgment we are asked to reverse, as not being sustained by the evidence, and on the ground that the facts shown do constitute a liability against the defendant bank.

The trial court found, first, that the plaintiff intended the draft to be paid to the individual who received the money from defendant, and that defendant was not guilty of any negligence in paying it; second, that the defendant was led and induced to pay the draft by acts of plaintiff, and plaintiff's negligence prompted its payment; and, third, that the plaintiff was not the real party in interest, and could not maintain the action, it appearing that he was simply the agent of Risser, the executor of the estate from which the money came.

The liability of defendant is asserted on the grounds set forth in section 42 of the negotiable instruments act of New York, which has been enacted in effect in 14 other states, and is claimed to be declaratory of the common law. Said section 42 reads as follows: "Where a signature is forged or made without authority of the person whose signature it purports to be, it is wholly inoperative, and no right to retain the instrument, or to give a discharge therefor, or to enforce payment thereof against any party thereto, can be acquired through or under such signature, unless the party against whom it is sought to enforce such right is precluded from setting up the forgery or want of authority." It is claimed that this signature is a forgery, and the defendant therefore liable. As above stated, there seems to be no doubt that the real Peter W. Brubaker who was among the heirs of this estate never indorsed this draft. But it also seems clear that the plaintiff is not entitled to set up this claim. A recent case in Rhode Island (Tollman v. American National Bank, 48 Atl. 480, 52 L. R. A. 877) seems to sustain plaintiff's contention. Its syllabus has the following: "A check drawn payable to the order of A. was procured by representations that the person to whom it was given was A., and the indorsement of the latter was forged thereto, and it was paid by the bank. Held, that the bank was liable to the drawer for such sum, both at the common law and under the statute." Rhode Island has adopted the statute above cited. The weight of authority, however, seems to be decidedly in favor of the doctrine that where a check or draft is drawn or indorsed and delivered to a party, to be cashed by him under the name in which it is made out or indorsed, that his signature by way of indorsement in that name is valid as between an innocent holder and the party delivering it to him. This is commonly put on the ground that the payer of the draft or the purchaser of it is simply carrying out innocently the intention of the maker or indorser. Emporia Nat. Bank v. Shotwell, 35 Kan. 360, 11 Pac. 141, 57 Am. Rep. 171; Meridian Nat. Bank v. First Nat. Bank, 7 Ind. App. 322, 33 N. E. 247, 34 N. E. 608, 52 Am. St. Rep. 450; Robertson v. Coleman, 141 Mass. 235, 4 N. E. 619, 55 Am. Rep. 471; Levy v. Bank of America, 24 La. Ann. 220, 13 Am. Rep. 124; Land, etc., Co. v. N. W. Bank, 196 Pa. 230, 46 Atl. 420, 50 L. R. A. 75, 79 Am. St. Rep. 717. It is also placed sometimes, as was done in a measure in this instance, by the trial court, on the ground of negligence on the part of the maker. It is sometimes held that the payee is a fictitious person, and the check or draft therefore payable to bearer.

It is suggested in defendant's brief that the exemption from liability is more properly placed on the ground of estoppel, or, as it is stated in the negotiable instruments act, that the party is "precluded from setting up the forgery or want of authority." It certainly would seem that in this case when Mr. Hoffman was satisfied with the release he got, and mailed the draft to the maker of that release, he asserted as definitely as a man could his desire that this money should be paid where it was paid. After that desire has been acted upon, and the false Brubaker has received the money, it would seem too late for the plaintiff to discover his mistake, and collect the money back from one who had paid it out to the individual he requested, though not the one he thought he was requesting to have it paid to.

It is recommended that the judgment of the district court be affirmed.

DAY and KIRKPATRICK, CC., concur.

Affirmed.

On Rehearing.

(June 18, 1902.)

ALBERT, C. A resident of Pennsylvania died leaving a will, of which one Peter Risser was appointed executor, and in which one Peter W. Brubaker was named as one of the legatees. The executor appointed the plaintiff in this case as agent to transact the business for him. On the first distribution of the estate made the share of Peter W. Brubaker was sent to him by draft through the mails to Illinois; on the second distribution, he received his share in person from the agent of the executor; when the final distribution was made his whereabouts were unknown to the executor, and his agent wrote from time to time to various places seeking to discover his address, but his letters were returned. Afterward the agent received the following

letter from an imposter: "Lincoln, Nebr., July 2, 1895. Mr. C. S. Hoffman: I got a letter from my brother sade you wanted my address it is Peter W. Brubaker, Lincoln, Nebr." The agent immediately sent a release, together with a letter directing the party to go before a notary public, sign and acknowledge the release, and return it to him, and informing him that on the receipt of such release the agent would remit the amount due on the final distribution. The release and the letter were received by the imposter, who signed and acknowledged the same before a notary public in Lincoln, using the name Peter W. Brubaker; whereupon the release was returned to the agent. The agent then purchased a draft for the amount due Peter W. Brubaker, drawn on a bank of Philadelphia, payable to himself, which he indorsed, "Pay to the order of Peter W. Brubaker. C. S. Hoffman," and inclosed it in an envelope, addressed to Peter W. Brubaker, Lincoln, Neb., in care of the notary before whom the return was acknowledged, together with a letter stating, "The release came back all right; I inclose draft for $264.15." The letter inclosing the draft was received at the office of the notary public, and was delivered by him to the imposter. The notary public accompanied the imposter to the defendant bank, and there identified him as Peter W. Brubaker. The imposter indorsed the draft, using the name of Peter W. Brubaker, and delivered it to the defendant, who paid him the amount due thereon, and forwarded the draft to its Eastern correspondent, by whom it was collected, and the amount placed to the credit of the defendant. The imposter disappeared, and has never since been seen nor heard of, and none of the parties connected with the transaction knew who he was, nor anything about him, save such facts as appear in the foregoing statement. Afterward, the real Peter W. Brubaker, being then in Omaha, learned of the final distribution of the estate, and wrote to the agent demanding payment of his share. The agent was finally convinced that payment had been made to the wrong party, and tendered the draft to the defendant, and demanded payment. Payment was refused, whereupon this suit was instituted to enforce payment. A trial was had to the court, without a jury, which resulted in a finding and judgment for the defendant. The plaintiff brings the case here on error.

The plaintiff insists that the sole question in this case is whether the indorsement of the draft by the imposter was a forgery. We do not believe a determination of that question will dispose of this case. That the indorsement was a forgery may be conceded; but it does not necessarily follow that the plaintiff is entitled to recover in this action. We think the majority of cases, certainly the best-considered cases, hold that, under the circumstances shown in evidence in this case, an innocent purchaser is protected by such indorsement. Meridian Nat. Bank v. First Nat. Bank (Ind.) 34 N. E. 608, 52 Am. St. Rep. 450; Emporia Nat. Bank v. Shotwell, 35 Kan. 360, 11 Pac. 141, 57 Am. Rep. 171; Kohn v. Watkins, 26 Kan. 691, 40 Am. Rep. 336; Land Title & Trust Co. v. N. W. Nat. Bank, 196 Pa. 230, 46 Atl. 420, 50 L. R. A. 75, 79 Am. St. Rep. 717; Robertson v. Coleman, 141 Mass. 235, 4 N. E. 619, 55 Am. Rep. 471; United States v. Nat. Exchange Bank (C. C.) 45 Fed. 163; Crippen Lawrence & Co. v. Am. Nat. Bank of Kansas City, 51 Mo. App. 508; Forbes v. Espy, 21 Ohio St. 474. It has been suggested that the cases just cited may be classified under four heads, the basis of such classification being the ground upon which the courts place their respective decisions, which are as follows: First, that such indorsement effectuates the intention of the drawer; second, that the drawer has been guilty of negligence; third, that the drawer is to be treated as a fictitious person; fourth estoppel. But such classification is unscientific, and is based on the language of the opinions, rather than upon any principle underlying them. A careful analysis of the cases will show, we think, that the controlling principle in each is that of estoppel, which, to our minds, is peculiarly applicable to cases of this character.

The plaintiff had money which belonged to Peter W. Brubaker. An imposter assumed the name of Peter W. Brubaker, and claimed the money. His identity was a question for the plaintiff. Satisfied that he was dealing with the real Peter W. Brubaker, the plaintiff indorsed and delivered the draft to the imposter. Of the contractual obligation thus created, the delivery of the draft was an essential element, and stamped the imposter as the person to whose order the plaintiff intended payment to be made. In other words, by the delivery of the draft to the imposter the plaintiff held him out to the world as his indorsee, and as the person to whose order he had, by his indorsement, directed payment to be made. He cannot now be heard to complain that the defendant acted on the indicia of identity with which he himself had clothed the imposter.

The plaintiff relies on the case of Rogers v. Ware, 2 Neb. 29, wherein it is held that "if a draft be payable to some person known at the time to exist, as the party to whose order it was to be paid, the genuine indorsement of such payee is necessary in order to a recovery thereon by an indorsee, even though he have no interest in it and the drawer knew that fact." That case would tell in favor of the plaintiff only on the theory that, when he indorsed and transmitted the draft to the imposter, he had in mind, as his indorsee, the real Peter W. Brubaker. But that theory is not supported by the facts. The name the plaintiff had in mind, undoubtedly, was Peter W. Brubaker; but the person whom he had singled out as the person bearing that name, and as the one entitled to the

money in his hands, was the imposter. This becomes clear, when we remember that he insisted on a release before transmitting the draft, and transmitted it on receipt of the release. The person he had in mind as his indorsee was the person who executed the release, which was the imposter. The real Peter W. Brubaker, under the circumstances, was not entitled to the draft, because he was not the person who executed the release. His indorsement of the draft would have been forgery.

The case of First Nat. Bank v. Farmers' & M. Bank, 56 Neb. 149, 76 N. W. 430, is also relied upon by the plaintiff. The facts in that case are as follows: The correspondent of a loan company presented an application for a loan, purporting to be signed by one B., on certain lands. The application was accompanied by an abstract, showing title to the land in B. The loan was accepted, and a bond and mortgage, purporting to be executed by B., forwarded to the company; whereupon the company sent its check for the amount of the loan, payable to B. The check was presented to a bank by the correspondent, bearing what purported to be the indorsement of B. and that of the correspondent. The bank paid the correspondent the amount of the check, and in turn received payment thereon from the bank on which it was drawn. B. did not own the land, and the abstract was false and a forgery. The bank on which the check was drawn brought suit against the other bank to recover back the amount of the check. There was evidence tending to show that B. was a fictitious person, and that the correspondent had made the application, executed the bond and mortgage, and indorsed the check himself. This court held, first, that if the application was made and the bond and mortgage executed by a third person, and that person indorsed the check, the indorsement was genuine, whether or not his real name was B., although he did not own the land; second, if the correspondent himself signed the application, bond, and mortgage and indorsed the check (using the name B.), the indorsement was a forgery. The principle involved in the first hypothesis of the court, we think, is the same as that applied in this case; that is, if the imposter was the person actually intended as the payee, his signature, though given under an assumed name, was genuine. As to the second hypothesis, it is based on a different state of facts. The local agent was not holding himself out as the real applicant, nor was the loan company dealing with him as such. The person for whom it intended the draft, and whom it had in mind as the payee, had no existence, but was a fictitious person. In the present case the person for whom the draft was intended, and whom the plaintiff had in mind as the payee, was a real person, claiming to be Peter W. Brubaker. We think the cases are clearly distinguishable.

The Chicago, B. & Q. R. Co. v. Burns, 61 Neb. 793, 86 N. W. 483, is also cited in support of plaintiff's petition. We do not consider that case in point. In that case a pay check was stolen from the payee, his indorsement forged, and payment obtained on the forged indorsement. It is clear that there the indorsement was not made by the party the drawer had in mind as payee. The distinction between this case and the present is obvious.

It is recommended that the conclusion reached in the former opinion be adhered to, and that the judgment of the district court be affirmed.

AMES and DUFFIE, CC., concur.

PER CURIAM. The conclusion reached by the Commissioners is approved, and, it appearing that the adoption of the recommendation made will result in a right decision of the cause, it is ordered that the conclusion reached in the former opinion be adhered to, and the judgment of the district court affirmed.

Affirmed.

McLUCAS et al. v. ST. JOSEPH & G. I. RY. CO.

(Supreme Court of Nebraska. Dec. 4, 1901.)

APPEAL—FINAL JUDGMENT.

1. To entitle a party to a review, there must have been a final order or judgment rendered in the cause. Reynolds v. City of Tecumseh, 67 N. W. 792, 48 Neb. 785.

Commissioners' Opinion. Department No. 3. Error to District Court, Jefferson County; Stull, Judge.

"Not to be officially reported."

Action by the St. Joseph & Grand Island Railway Company against Weems H. McLucas and another. Judgment for plaintiff, and defendants bring error. Dismissed. See. 93 N. W. 928.

E. H. Hinshow, for plaintiffs in error. M. A. Reed, W. P. Freeman, and M. A. Hartigan, for defendant in error.

DUFFIE, C. This action was commenced by the St. Joseph & Grand Island Railroad Company against Weems H. McLucas and John C. McLucas to recover possession of certain lands in the city of Fairbury, claimed by it as a part of its right of way. The defendants claimed title to the land by adverse possession; asserting that they had been in the actual, exclusive, adverse possession thereof for more than 15 years. A trial was had to the court, and December 10, 1898, the court made certain findings of facts, but the record does not disclose that any final judgment in the case has ever been entered. What are called the "Findings and Judgment" conclude as follows: "That the plaintiff recover against the defendants the costs of this action, taxed at $——, to all of

Digitized by Google

which the defendants except. Motion for a new trial filed, argued, and submitted. Motion for new trial overruled, to which the defendants except. Judgment on findings. Forty days are given by the court to the defendants to prepare a bill of exceptions. The supersedeas bond in the case is fixed at $200." To entitle a party to a review, there must be a final order or judgment rendered in the case. A mere judgment for costs is not reviewable before final judgment. Reynolds v. City of Tecumseh, 48 Neb. 785, 67 N. W. 792; Smith v. Johnson, 37 Neb. 675, 56 N. W. 323; Sprick v. Washington County, 8 Neb. 253.

In the present condition of the record, we have no jurisdiction to review the case, and we therefore recommend that the petition in error be dismissed.

ALBERT and AMES, CC., concur.

Dismissed.

UNION CENT. LIFE INS. CO. v. BAKER et al.

(Supreme Court of Nebraska. Nov. 20, 1901.)

FORECLOSURE—APPRAISEMENT—OBJECTIONS.

1. Where an appraiser called by the sheriff to appraise real estate ordered sold under a decree of foreclosure is disqualified to act, and such disqualification is known to the defendant at or prior to the appraisement, he cannot lie still until after the sale is made, and urge such disqualification as an objection to the confirmation of the sale.

Commissioners' Opinion. Department No. 3. Appeal from District Court, Custer County; Grimes, Judge.

"Not to be officially reported."

Action by the Union Central Life Insurance Company against Herbert Baker and others. Judgment for defendants, and Baker appeals. Affirmed.

A. B. Coffroth, Alpha Morgan, and Flansburg & Williams, for appellant. J. R. Dean, for appellee.

DUFFIE, C. This is an appeal from an order confirming a sale. The only objections that demand examination are that one of the appraisers was neither a freeholder nor a resident of the county, and that the appraisement was too low. No objection to the appraisement was made until after the sale, nor until order to show cause against confirmation was entered. The difference in the value of the property as fixed in the affidavits filed by the appellant, and that found by the appraisers is not so great as to call on us to interfere with the order of the court in confirming the sale. There is no showing made by the appellant that he was not fully informed of the claimed disqualification of one of the appraisers long prior to the sale. Indeed, the only evidence offered of such disqualification is the affidavit of the appellant himself, whose statement relates to facts within his knowledge long prior to the date of the appraisement. If he knew the appraiser to be disqualified, he should not have waited until after the appellee had gone to the expense of advertising and selling the land before making his objection known. The sheriff, in his return, certified that this appraiser was a resident freeholder of the county, and the appraiser himself might be subjected to an examination if there was any doubt as to his qualification to act.

We do not think we ought to interfere with the finding of the district court, under the facts disclosed by the record, and therefore recommend that the decree of the district be affirmed.

ALBERT and AMES, CC., concur.

Affirmed.

DORWART v. TROYER et al.

(Supreme Court of Nebraska. Nov. 26, 1901.)

JUDGMENT—RELIEF IN EQUITY.

1. Equity will not relieve against a judgment at law, unless the complainant both pleads and proves a defense thereto upon the merits, nor in any case in which he has had knowledge or notice of the pendency of the action in time to make his defense therein, and has negligently omitted so to do.

Commissioners' Opinion. Department No. 8. Appeal from District Court, Saline County; Hastings, Judge.

"Not to be officially reported."

Action by Frank L. Dorwart against Charles E. Troyer and others. Judgment for plaintiff, and defendants appeal. Reversed.

J. D. Pope, for appellants. Hastings & Sands, for appellee.

AMES, C. This is an action to enjoin the enforcement of and to procure the cancellation of a judgment of a justice of the peace. The suit in justice's court was in replevin to recover the possession of certain property in the possession of the defendant. A summons was issued and delivered to an officer, who took the goods under it, but upon failure of the plaintiff to give the statutory undertaking redelivered them to the defendant in the suit. The return of the officer upon the writ recites this fact, but fails to show a personal service of the summons upon the defendant. The action proceeded as one for damages, the defendant making default, and resulted in a judgment in favor of the plaintiff. An execution issued upon the judgment, and was about to be levied upon the property of the defendant therein, when this action was begun against the officer and judgment plaintiff, and a temporary injunction granted restraining the execution of the writ. On the final hearing the injunction was made perpetual, and a decree entered as prayed in the petition. There is no ques-

¶ 1. See Judgment, vol. 30, Cent. Dig. §§ 823, 849, 885.

Digitized by Google

tion that the goods were taken from and redelivered to the possession of the defendant in replevin personally. He therefore had knowledge of the pendency of the action in the justice's court, and it is not alleged nor proved that he was prevented from making a defense thereto by unavoidable casualty or surprise, nor are any facts pleaded showing that he had a defense thereto. The mere assertion in the petition that he "had a good, absolute, and perfect defense to said action" is a mere conclusion of law, and insufficient. Fickes v. Vick, 50 Neb. 401, 69 N. W. 951. It is true that he alleges that he was at the time sheriff of the county, and held the goods under an execution issued on a judgment in favor of Herman Bros. against a partnership composed of one Ida E. Brown and one Robert C. Brown, and that the goods after his levy had been awarded to him upon a trial of the right of property with one W. H. Brown, but these facts have no bearing upon the claim of title of the plaintiff in replevin. In other respects this case is ruled by that of Osborn v. Gehr, 29 Neb. 661, 46 N. W. 84, in which the judgment attached was rendered in an action in which no summons had been issued, and by Bankers' Life Insurance Company v. Robbins, 53 Neb. 44, 73 N. W. 269, and cases there cited. It seems to be the settled law of this state that equity will not relieve against a judgment at law unless the complainant both pleads and proves a defense thereto upon the merits, nor in any case in which he has had knowledge or notice of the pendency of the action in time to make his defense therein, and has negligently omitted so to do.

It is recommended that the judgment of the district court be reversed, and the action dismissed, at the costs of the appellee.

ALBERT and DUFFIE, CC., concur.

Reversed and dismissed.

PAYNE v. PETTIBONE & NIXON.

(Supreme Court of Nebraska. Oct. 16, 1901.)

ASSIGNMENT OF ERRORS.

1. Alleged errors must be assigned as such specifically in the petition in error or they will not be reviewed.

Commissioners' Opinion. Department No. 2. Error to District Court, Colfax County; Marshall, Judge.

"Not to be officially reported."

Action by Pettibone & Nixon against Robert L. Payne. Judgment for plaintiffs. Defendant brings error. Affirmed.

McAllister & Cornelius, for plaintiff in error. C. J. Phelps, for defendants in error.

POUND, C. Error is prosecuted from a judgment foreclosing certain tax liens. The petition in error contains but three assignments, namely, that the judgment is contrary to the evidence, that it is contrary to law, and that the court erred in entering judgment for the plaintiff, and not entering judgment for the defendant. The sole point argued or raised by the briefs of counsel is that the court erroneously permitted the plaintiffs to amend a petition entitled in their partnership name, in which the suit appeared to be brought by a partnership, "by * * *," substituting the names of the individual partners as plaintiffs. Whether such amendment was within the somewhat liberal provisions of section 144 of the Code of Civil Procedure we need not decide, since the ruling in question is not specifically assigned as error, and is obviously in no way covered by the general assignments that the judgment is contrary to law, and that it should have been for the defendant. In the bill of exceptions there is a stipulation of facts, in which the defendant asserts his point as to the amendment, and, in view thereof, counsel seem to rely upon their assignment that the judgment is contrary to the evidence. But the stipulation merely recites that the defendant makes a certain claim as to a question of law. That question was to be decided on the record, not on the stipulation. It is recommended that the judgment be affirmed.

OLDHAM and SEDGWICK, CC., concur.

Affirmed.

BUCK v. OLDEMAN.

(Supreme Court of Nebraska. Oct. 16, 1901.)

APPEAL—REVIEW.

1. Where there is any competent evidence to sustain the judgment of the trial court on a disputed question of fact, its judgment will not be disturbed unless it is clearly erring.

Commissioners' Opinion. Department No. 2. Error to District Court, Douglas County; Powell, Judge.

"Not to be officially reported."

Action by Frederick Oldeman against John Buck. Judgment for plaintiff. Defendant brings error. Affirmed.

Hamilton & Maxwell, for plaintiff in error. T. W. Blackburn, for defendant in error.

OLDHAM, C. The plaintiff in error, herein styled the defendant, was sued by the defendant in error, herein styled the plaintiff, for services rendered as bartender in defendant's saloon. The case was originally tried before a justice of the peace, and taken by appeal to the district court. A jury was waived, and the cause was tried by the court, who gave judgment for the plaintiff, and defendant brings error to this court.

The only question presented for review is as to whether the evidence showed any liability on the defendant for the services ren-

¶ 1. See Appeal and Error, vol. 2, Cent. Dig. §§ 1960, 1961.

Digitized by Google

dered. The saloon in which plaintiff worked was operated in defendant's premises and under a license issued to him. The business was managed by one John Boesen, and Boesen employed the plaintiff. There is no dispute that the services had been rendered, nor that the amount sued for was owing to the plaintiff, but defendant contends that Boesen, and not defendant, is liable for the services.

We have examined the evidence, and are fully satisfied that it sustains the judgment of the trial court as to the liability of the defendant Buck for the services rendered. It is therefore recommended that the judgment of the district court be affirmed.

POUND and SEDGWICK, CC., concur.

Affirmed.

JOHNS v. KAMARAD et al.

(Supreme Court of Nebraska. Dec. 4, 1901.)

CHATTEL MORTGAGES—FAILURE TO FILE—EXECUTION SALE—GROWING CROPS.

1. Where the mortgagee of chattels is not in possession and his mortgage is not on file at the date of the levy, a purchaser at execution sale under a judgment against the mortgagor will take free of the mortgage, though he had notice thereof prior to the sale.

2. Growing crops are subject to levy and sale, irrespective of their stage of growth.

Commissioners' Opinion. Department No. 2. Error to District Court, Valley County; Thompson, Judge.

"Not to be officially reported."

Action by Joseph Johns against Lewis Kamarad and others. Judgment for defendants, and plaintiff brings error. Affirmed.

A. M. Robbins, for plaintiff in error. Clements Bros., for defendants in error.

POUND, C. The plaintiff was the holder of a chattel mortgage upon the landlord's share in a growing crop. The principal defendants were purchasers of the crop at execution sale under a judgment against the mortgagor. The mortgage was not on file at the date of the levy, but it appears that the purchasers were informed and knew of its existence prior to the sale. On this ground, plaintiff claims that they took subject thereto. Under the well-settled construction of section 14, c. 32, Comp. St. 1901, the mortgage was void as to execution creditors of the mortgagor, whether they had actual notice of the mortgage or not. Farmers' & Merchants' Bank v. Anthony, 39 Neb. 343, 57 N. W. 1029; Spaulding v. Johnson, 48 Neb. 830, 67 N. W. 874. If the mortgage is void as to the creditor, of what avail is this, unless the law gives a title free of the mortgage to the purchaser at execution sale? To hold that the purchaser takes subject to a mortgage because of notice, although the levy creates a superior claim, notwithstanding notice, would nullify the rule. The court indicated the correct view in Farmers' & Merchants' Bank v. Anthony, 39 Neb. 343, 350, 57 N. W. 1029, but without expressly deciding the point; and we think Railsback v. Patton, 34 Neb. 490, 52 N. W. 277, so far as in conflict therewith, ought to be overruled.

It is also contended that the levy and sale were void because the growing crop in question was so immature and in such an early stage of growth that it was not subject to levy. Sims v. Jones, 54 Neb. 769, 75 N. W. 150, 69 Am. St. Rep. 749. But it is argued that the crop levied upon in that case was further advanced than the crop sold in this case. We see no force in this distinction. If the crop was sufficiently advanced to be sold or mortgaged by the owner, it was subject to sale by the sheriff. If it was not, plaintiff, who claims as mortgagee, has no case. In Polley v. Johnson, 52 Kan. 478, 35 Pac. 8, 23 L. R. A. 258, quoted with approval in Sims v. Jones, the crop was no further advanced than in the case at bar. We perceive no point at which the line may be drawn, short of the extremes. If the crop may be levied on before maturity at all, it must be subject to levy from the time when there begins to be a growing crop in fact, irrespective of the stage of growth.

We recommend that the judgment be affirmed.

OLDHAM and SEDGWICK, CC., concur.

Affirmed.

¶ 1. See Chattel Mortgages, vol. 9, Cent. Dig. § 264.

WEBSTER v. CITIZENS' BANK OF OMAHA.

(Supreme Court of Nebraska. Jan. 8, 1902.)

LIMITATIONS—ABSENCE FROM STATE—WHAT CONSTITUTES.

1. Where a resident of this state against whom a cause of action has accrued removes his residence to another state, but continues his business here, and comes to the state openly, notoriously, and regularly each business day, and there remains during working hours, he is not absent from the state, within the meaning of section 20, Code Civ. Proc., during the period in which he so comes thereto and remains therein.

2. In such case, in determining the period of his absence from the state within the meaning of said section, it is not proper to reckon the aggregate number of hours during which he is out of the state; but where it appears that he came regularly to his office in the state each working day of the year, except for a brief annual vacation, if the aggregate of such vacations and of the days on which he did not come to his office does not extend the statutory period of limitation to or beyond the date of suit, the cause of action is barred.

Commissioners' opinion. Department No. 2. Error to District Court, Douglas County; Slabaugh, Judge.

"Not to be officially reported."

¶ 1. See Limitation of Actions, vol. 33, Cent. Dig. § 459.

Digitized by Google

Action by the Citizens' Bank of Omaha against B. M. Webster. Judgment for plaintiff. Defendant brings error. Reversed.

James H. McIntosh and Chas. A. Goss, for plaintiff in error. John P. Breen, for defendant in error.

POUND, C. The Citizens' Bank of Omaha, hereinafter referred to as "plaintiff," sued Webster, hereinafter styled "defendant," upon a check given by the latter to one Johnson on March 8, 1892. Suit was brought March 2, 1899. Whether the suit was upon the check itself, so as to be governed by the five-year limitation, or was not, rather, for the abstraction of the check from the bank, so as to make the limitation four years, we need not decide. The defendant claimed that he gave it to Johnson, who was one of the officers of the bank, for his accommodation, upon a promise that it should not be presented, and that Johnson afterwards returned it to him as promised. In addition, he pleaded the statute of limitations. Judgment was rendered for the plaintiff, and the defendant prosecutes error.

Many interesting questions are raised in the record and briefs, but we have not found it necessary to investigate more than one. Defendant has maintained an office in Omaha, in one of the chief office buildings in that city, since 1890. He resided in Omaha when the cause of action accrued, but in December, 1895, removed his residence across the river to Council Bluffs, Iowa. He continued his business in Omaha, however, and, from the time of removing his residence until served with process in this cause, regularly came to his office every day but Sunday, and there remained during working hours, as he had done since 1890. It is in evidence that he took a brief vacation each year. But, except for that, he was always in Omaha during working hours on week days during the whole period in which he maintained his residence across the state line. Under these circumstances, the question is whether plaintiff may avail itself of the last clause of section 20, Code Civ. Proc., which reads: "If after the cause of action accrues, he depart from the state, or abscond or conceal himself, the time of his absence or concealment shall not be computed as any part of the period within which the action must be brought." This is a subject upon which decisions in other states have to be examined with great care in order to ascertain their applicability, since there is a considerable diversity in the various statutes. In a large number of states, the statute provides that if, after a right of action has accrued against a person, "he shall be absent from and reside out of the state," the time of his absence shall not be taken as part of the period limited for the commencement of the action. In some it is provided that the time of his absence "until he return to reside" in the state shall not be counted. But another type of statute is to be found in Ohio, Kansas, Oregon, and Wyoming, and the Nebraska statute is of that type. These statutes omit the words "reside out of," and provide only that, if a party departs from the state, the time of his absence shall not be computed. The statutes of the several states are classified and the substance thereof stated in Wood's Limitations of Actions (3d Ed.) §§ 244, 245. Under statutes of the former type, it has been settled that the chief criterion is residence. Thus, under the former provision of the New York Code, which was of that class, it was held, in cases very similar to the one at bar, that defendants, who lived in New Jersey, but spent the whole of business hours on every business day at offices which they maintained in New York City, could not avail themselves of the statute. Bennett v. Cook, 43 N. Y. 537, 3 Am. Rep. 727; Bassett v. Bassett, 55 Barb. 505. This holding was followed also in New Hampshire (Bell v. Lamprey, 57 N. H. 168), and in Massachusetts (Rockwood v. Whiting, 118 Mass. 337), in which states, however, the statutes used the words be "absent from and reside out of" the state. But the injustice and impolicy of such a rule are so manifest in cases where a person permanently engaged in business in one state, and constantly to be found there during the working portion of every business day, happens to live across the state line, that New York in 1888 amended her statute by adding the words, "and remains continuously absent therefrom for the space of one year or more." As the statute now stands, it is held that one who resides out of the state may none the less claim its protection, unless he is in addition to his nonresidence, continuously absent. Hart v. Kip, 148 N. Y. 306, 42 N. E. 712; Costello v. Downer, 19 App. Div. 434, 46 N. Y. Supp. 713; Connecticut Trust & Safe Deposit Co. v. Wead, 58 App. Div. 493, 69 N. Y. Supp. 518. The question before us, then, is whether we shall construe our statute to mean "reside out of the state" when it says "depart," and shall construe "absence" as meaning nonresidence, or whether we shall recognize some force in the omission of any reference to residence in our statute and give effect thereto.

Counsel for plaintiff states his position thus: "When a man changes his residence and domicile to another state, he has 'departed' from this state, and remains 'absent,' within the meaning of this section of our statute, until he again takes up his residence within it." In other words, although a man is physically and actually present in a place other than his residence, he is, for the purpose of this statute, constructively absent, and at the place where he resides. We do not believe that such is the correct interpretation of statutes such as ours, nor do we think statutes which make nonresidence an

Digitized by Google

express ground of exception have any bearing thereon. Absence and nonresidence are two entirely different things. Thus, a man may reside on a homestead in one county, and yet be long absent therefrom and in another county. Corey v. Schuster, 44 Neb. 269, 62 N. W. 470. Equally he may reside in Iowa and yet be continually present in the state of Nebraska, accessible to service of summons, for many years. This is forcibly illustrated by the decisions under the present statute in New York, where persons resident in New Jersey are yet within the protection of the statute, because they have not been continually absent from New York for one year. The purpose of the statute is practical—to afford requisite time and facility for reasonably diligent prosecution of claims. If a party resides in the state, it is a proper construction to hold that mere temporary absences do not suspend the statute, and that they cannot be tacked one to another so as to prolong the statute. Blodgett v. Uttley, 4 Neb. 30; Hedges v. Roach, 16 Neb. 677, 21 N. W. 404. In such cases there is no interruption of the possibility of service, since the party is, during each of such absences, open to service at his usual place of residence. But the very considerations that lead to this conclusion under a statute which makes no reference to nonresidence, except as it may be involved in absence or departure, constrain the further conclusion that, where a party is actually present in the state every day during the period of limitation, and may be served with summons at any time during such period, he is not to be deprived of the protection of the statute merely because he resides out of the state, a fact which, of itself, our statute does not regard. This is the established construction of the statute of Kansas, which is like ours in all essential particulars. Hoggett v. Emerson, 8 Kan. 262; Conlon v. Lanphear, 37 Kan. 431, 15 Pac. 600. Brewer, J., puts the point very tersely in the former case. The language of the statute is, he says, " 'Be out of the state,' not 'reside out of the state.' The question is not one of domicile, but of personal presence. A person may reside in Illinois and yet spend more than half his time in Kansas." No express adjudications have come to our attention from any other state having a statute like our own. But a dictum of the Supreme Court of Ohio, passing on a statute which makes no mention of residence, is very suggestive. "Presence of the defendant, so that he may be sued, avails in his favor; absence from the state, whether at the accruing of the cause of action or otherwise, suspends the running of the statute. Stanley v. Stanley, 47 Ohio St. 225, 24 N. E. 493 [8 L. R. A. 333, 21 Am. St. Rep. 806]. This is an eminently reasonable view of the intent with which the provision in question was framed. The important practical question is, was the party within reach of process in the state?" "The scope and purpose of the entire section," say Brewer, J., in Hoggett v. Emerson, supra "is to suspend the running of the statut during such period of time as the debtor i beyond the reach of process from the court of this state." The same view was take in Blodgett v. Uttley, 4 Neb. 25, where th court considered the proper test to be whet er "during that period the right to proceed i our courts to reduce the claim to judgme is suspended." And in Talcott v. Bennett, 4 Neb. 569, 68 N. W. 931, Hoggett v. Eme son, supra, was cited with approval in pas ing on a collateral question. We do n think the several cases where this court h used the word "reside" or "residence" i connection with the section in question a of any weight to the contrary. A perso commonly is at his residence, not elsewher When one becomes a nonresident he do not, as a rule, remain in the state. Hen in most cases, so long as absence and no residence were concurrent, the court, n having its attention directed to the matte might use one word or the other indifferen ly. Edgerton v. Wachter, 9 Neb. 500, 4 N W. 85, might seem to be more in point. O this case it must be remarked that it wa not properly a decision of the court at a having been submitted to one of the judg by agreement of the parties, the other tw being disqualified to sit; that it fails to n tice the clear distinction between the pr visions of our Code and the general run o such statutes; that it cites cases based up and construing statutes of another typ that the main argument relied upon, namel that the statute of limitations cannot run a the same time in two jurisdictions, is o viously fallacious, in view of the fact th this is not a question of natural law, but o statutory construction, and whether limit tion runs or not in each jurisdiction must d pend upon the wording of the statute the in force; and that it proceeds upon the fir clause of section 20, not upon the one he in question. Hence we do not think it co trolling in this case. We need not consid how far it is a correct construction of th first clause of section 20, because the co siderations governing the construction of th words "come into" in that clause, and o "depart from" and "absence" in the las clause, are not altogether the same. It ma well be that where a cause of action accru in Iowa against a resident of that state h does not "come into" this state, within th meaning of the statute, until he comes pe manently by taking up his residence her and yet at the same time that one who ha always been in the state, and continues t keep up his business and to spend the whol of his working hours within our limits, doe not depart and is not absent, within th meaning of the next clause, merely becaus he maintains his home across the state lin We should require something more than th decision to constrain us to an interpretatio

of the statute, not called for by its words, which would lead to the unfortunate situation from which one state, at least, has had to extricate itself by express legislation.

If we have correctly interpreted the statute, the time during which the defendant resided in Iowa is not to be deducted from the period of limitation, except so far as during that time he was actually absent from the state. It is admitted that he was so absent every Sunday, every night, and for short vacation periods each year. How are we to reckon the time during which he was absent? Are we to take the number of hours in the statutory period of five years and determine whether or not the defendant was in Omaha that many hours after the cause of action accrued, or are we to take the number of days and ascertain whether the number of days during the five years in which he was not in Omaha openly and notoriously, and accessible to service during the working hours thereof, added together, would carry the statutory period up to or beyond the date when this suit was begun. Some dicta in Bennett v. Cook, 43 N. Y. 537, 3 Am. Rep. 727, indicate that the former process might be admissible, and plaintiff's counsel has framed his argument accordingly. But the remarks in question are obiter, and not argued or apparently much considered. We cannot agree that they afford a proper method of reckoning. The statute ought to be given a common-sense construction to further its obvious purpose. The night hours during which the defendant was in Iowa were not necessary or of any utility to any one who wished to sue defendant, so long as he was notoriously at his office in Omaha throughout the working hours of the day through the entire year. No one was hindered or obstructed in getting service on him by his going to Iowa overnight, so long as he was always accessible in Nebraska during the day. When the plaintiff got ready to sue him, he was sued and served in Douglas county, Neb. It seems clear, therefore, that the days on which he was not in Omaha and accessible to service are to be taken into account, not the number of hours during which he was in Iowa. Looking at it thus, if we allow two months of each year for vacations and holidays—which is far more than the testimony shows—and 52 Sundays a year, we would have four months and 104 days of absence in all, had he resided in Iowa the full term of two years. But he resided there only one year and three months of the time that elapsed after accrual of the cause of action till the expiration of the five-year limitation. It is obvious, therefore, that the period of absence, thus computed, is the extreme that could be made out from the evidence. At the time he changed his residence to Iowa, three years and nine months of the statutory period had elapsed. Three years and three months more elapsed till suit was brought. Of that time, if we take the most liberal view of the evidence possible, reckoning the days on which he was not in Omaha throughout business hours and liable to service of process, the extreme aggregate of defendant's absences was only four months of vacations and holidays and 104 Sundays. This aggregate, added to the year and three months the statute had yet to run, obviously brings the bar of the statute well inside the date of the commencement of this action.

We therefore recommend that the judgment be reversed and the cause remanded.

OLDHAM and SEDGWICK, CC., concur.

Reversed and remanded.

STATE ex rel. THOMPSON v. STULL et al.

(Supreme Court of Nebraska. Jan. 8, 1902.)

APPEAL—REMAND—MANDAMUS TO COURT.

1. Where, upon appeal to this court, the judgment of the trial court is reversed, and the cause remanded for further proceedings, the trial court has authority to take such further action in the interest of justice as the law will sanction, and a sound discretion dictate or approve.

2. This court will not, by mandamus, undertake to control the discretionary powers of another tribunal.

Commissioners' Opinion. Department No. 1. "Not to be officially reported."

Application by the state, on the relation of Samuel Thompson, for a writ of mandamus to John S. Stull and others. Writ denied.

Samuel P. Davidson, for relator.

KIRKPATRICK, C. This is an application for a peremptory writ of mandamus on behalf of Samuel Thompson, relator, against the Honorable J. S. Stull and the Honorable Charles B. Letton, judges of the district court of Johnson county. It is disclosed by the record that on the 19th day of May, 1898, a judgment and decree were entered in the district court of Johnson county against relator and in favor of John C. Buehler, dismissing the petition of plaintiff, which asked the foreclosure of a real-estate mortgage. An appeal was regularly prosecuted by plaintiff in that action, relator herein, to this court, which, on the 10th day of July, 1901, resulted in a judgment of reversal and an order remanding the cause to the district court for further proceedings.

Relator contends that inasmuch as the only answer filed in the trial court was a plea of payment, and that this court, in its judgment of reversal, found that such plea was not sustained by the evidence, therefore it is the duty of the district court to enter judgment immediately in favor of relator for the amount due upon the note and mortgage, together with a decree of foreclosure. The

¶ 2. See Mandamus, vol. 28, Cent. Dig. § 64

Digitized by Google

respondent the Honorable J. S. Stull refused to take this action, but set the case down for a new trial in its regular order on the docket.

The order made by this court for the reversal of this case is as follows: "For the reasons stated in the foregoing opinion, the judgment of the district court is reversed, and the cause remanded." There can be no question that the effect of the language quoted and of the judgment in that case is a general reversal of the findings and judgment of the trial court, leaving the cause, except as to matters adjudicated in this court, in all respects as though no trial had ever been had. There is at the present time, neither in this court nor in the trial court, any finding of fact upon which a judgment could be properly entered. There can be no question that in this case the trial court is as fully empowered to proceed to a new trial and a final determination of the case as though the case never had been brought to this court on appeal.

The rule is well settled that in equity causes brought to this court on appeal this court has jurisdiction, in a proper case, to enter judgment in this court; or remand the case, with directions to the district court to enter judgment; or to reverse the findings and judgment of the trial court, and remand the cause generally for the trial court to take such steps as to it may seem just and proper. In the particular case under consideration this court saw fit to reverse the findings and judgment of the trial court, and remand the cause generally for a new trial. In the case of Pinkham v. Pinkham, 60 Neb. 600, 83 N. W. 837, this court, speaking by Holcomb, J., said: "Where, upon appeal to this court, the judgment of the trial court is reversed, and the cause remanded for further proceedings, with directions to proceed according to law, held, that the cause was remanded generally, and not specially or for any particular purpose." In that case the court further said: "Where, in an equitable action, a decree of the trial court is reversed and the cause remanded generally, the situation of the parties is the same as at the beginning of the trial, and, in the exercise of a sound discretion vested in the trial court, amendments of the pleadings may be made, not inconsistent with the opinion of the appellate court, and a trial of the issues had de novo." To the same effect is the case of Troup v. Horbach, 57 Neb. 647, 78 N. W. 286; Badger Lumber Co. v. Holmes, 55 Neb. 473, 76 N. W. 174. In the case of Troup v. Horbach, supra, this court, speaking by Sullivan, J., said: "Judgment was reversed, with authority to the trial court to take such further action in the interest of justice as the law would sanction and a sound discretion dictate or approve. Within the bounds of judicial discretion, the court might grant or refuse leave to amend the pleadings; it might decide the case on the record already made; it might take additional evidence, or it might try all the issues de novo."

From what has been said, and from the authorities quoted, it seems clear that the trial court may, in its discretion, take any action in said cause not inconsistent with the opinion of this court. The rule is elementary, and this court will not, by mandamus, undertake to control the exercise of the discretionary powers of another tribunal. State v. Merrell, 43 Neb. 575, 61 N. W. 754; State v. Churchill, 37 Neb. 702, 56 N. W. 484; State v. Slocum, 34 Neb. 368, 51 N. W. 969.

For the reasons stated, it is recommended that the application for the writ be refused, and the action dismissed.

DAY and HASTINGS, CC., concur.

Writ denied. Action dismissed.

GERMAN INS. CO. v. STINER.

(Supreme Court of Nebraska. Jan. 8, 1902.)

PLEADING—MOTION TO STRIKE—INSTRUCTIONS—INSURANCE—CONDITIONS OF POLICY.

1. It is not error to overrule a motion to strike, which includes, together with some matter which should have been stricken out of a reply, other matters, which embody a proper reply.

2. Instructions cannot be reviewed in this court unless the record shows they were passed upon by the trial court and an exception taken to the rulings thereon.

3. Evidence *held* to warrant the submission to the jury of question as to whether or not the insurance company were aware of facts as to conditions of the policy at the time of the acts relied upon as a waiver, and instruction No. 5, set out in the opinion, *held* to properly submit that question.

Commissioners' Opinion. Department No. 1. Error to District Court, Dawson County; Sullivan, Judge.

"Not to be officially reported."

Action by Henry Stiner against the German Insurance Company. Judgment for plaintiff, and defendant brings error. Affirmed.

Smith & Olmstead, for plaintiff in error. Tibbets Bros. & Morey and L. B. Stiner, for defendant in error.

HASTINGS, C. July 18, 1893, the plaintiff below and defendant in error here took out a policy of insurance in the sum of $2,000 in the defendant company, insuring plaintiff's farm dwelling house in the sum of $1,000, farm barn and shed adjoining in the sum of another $1,000, against loss by fire, from July 15, 1893, to July 15, 1898. September 17, 1897, the barn was destroyed by fire. The next morning the plaintiff notified H. O. Smith, of Lexington, through whom the insurance had originally been effected, and he at once notified the insurance company at Freeport, Ill., of the loss. On September 28th the adjuster of the company

¶ 1. See Pleading, vol. 39, Cent. Dig. § 1169.

Digitized by Google

went to Lexington, went to the real estate records of the county, and procured a certified copy of a mortgage made in 1894 of $700 upon the 80 acres of land on which the barn was situated. This mortgage seems to have been still in force at the time of the fire, but was paid just before the institution of this action. The policy contained the provision: "If the property shall hereafter become mortgaged or incumbered * * * without consent indorsed hereon, then * * * this policy shall be null and void." The adjuster, after procuring a copy of the mortgage, went to plaintiff's home, and found him away, but later met him a couple of miles from his home, and asked him to go to Lexington that night to settle the matter, Lexington being about nine miles away. Plaintiff repaired to Lexington that evening, and found the adjuster at the lumber yard ascertaining the amount of the lumber that went into the barn. From there they went to the hardware store, and found it closed. They then went to the adjuster's room at the hotel, where a proof of loss was made out, and plaintiff was sent to look for a notary. Not finding one readily, they took plaintiff's buggy and started toward the northern part of the town to a notary's residence, where the proof of loss was sworn to. The proof of loss contained a statement to the effect that there had been no transfer or incumbrances or change of ownership or occupancy since the issuance of the policy. After the execution of this proof the adjuster asked the plaintiff whether there was a mortgage, and was informed that there was one; also inquired whether the plaintiff had permission to make a mortgage, and was told that he had none. Some dispute appears in the testimony as to what further happened; plaintiff claiming that the adjuster thereupon told him he had sworn falsely in making the proof, and had thereby forfeited his claim, but the plaintiff also admits that the adjuster claimed the policy was void because of the existence of the mortgage. The adjuster denies charging the plaintiff with having sworn falsely. An arrangement seems to have been made on that occasion whereby the adjuster was to procure $500 for the plaintiff, and the plaintiff indorsed his policy and surrendered it. Subsequently the adjuster seems to have written a receipt for $500 over plaintiff's signature, and within three or four days of the interview, at Lexington, sent the plaintiff a draft for $500. A part of the arrangement of settlement at Lexington had been that the policy should be reinstated with reference to the house. A few days after the draft, what is termed by the parties a mortgage slip, consenting to the placing of incumbrances to the extent of $700, was sent to plaintiff. In the meanwhile plaintiff had become dissatisfied with his settlement, had retained the draft without cashing it, and in about 15 or 20 days caused it to be returned to the defendant's adjuster, with a demand for the return of the policy and for payment in full. Payment was not made, and an action was begun on the policy to recover its full amount. It is alleged in the petition that the policy had been surrendered on the representation of defendant's agent that it was needed for the purpose of indorsing the payment of loss thereon, and for the purpose of attaching the mortgage clause as to the remaining property. The insurance and destruction of the property is not questioned. Damage to plaintiff is denied, and the requesting of proofs on its part, and that they were furnished by plaintiff, and the lapse of 60 days since such proof, and all indebtedness. The answer also sets up the incumbrance clause of the policy and its violation, and that thereby the policy became void. Plaintiff replied that the answer stated no defense; that the mortgage was no increase of the risk, as the land was worth over $5,000; that the mortgage was placed on the premises with the full knowledge of defendant's local agent; that plaintiff had a large amount of other property, and a note secured by the mortgage was signed by his wife, who also had large property interests, and that the mortgage was made at plaintiff's instance, the mortgagee being satisfied with the unsecured note of plaintiff and wife. This matter was all stricken out of the reply on defendant's motion. So also were certain allegations as to defendant's obtaining the policy by false charges of perjury and procuring an agreement for a settlement by such means. There was left, however, in the reply the following allegation: "Plaintiff further alleges that with full notice then and there of all the foregoing facts said Rowntree refused to pay said loss on the sole ground that plaintiff had committed perjury, and afterwards, with full knowledge of all the foregoing facts, defendant sent plaintiff a slip to be attached to said policy consenting to said mortgage, and making any loss thereunder, as to other property covered by said policy, payable to the mortgagee, in said seven hundred dollar mortgage, but refused to return said policy to plaintiff, though the premium thereon has been paid, and said policy is in full force and effect, and belongs to plaintiff, but, still withholding said policy, sent an order drawn by said Rowntree on defendant for the sum of five hundred dollars ($500.00), offering the same in full satisfaction of said loss, which offer was by plaintiff refused and said order returned." "Plaintiff further alleges that said Rowntree has since the return of said order made frequent offers to settle said loss for an amount largely below the amount named in said policy, basing his reasons therefor on the ground that the loss sustained was not in fact equal to the amount named in said policy, and claiming that defendant had a right to rebuild said barn and could not be forced to pay full amount named in said policy, and by reason of the

Digitized by Google

premises of the aforesaid, and by its negotiations for the settlement of said loss, defendant has waived and has become estopped from interposing as a defense said alleged forfeiture of said policy."

It is probable that a large part of each of these paragraphs should have been stricken out as pleading evidence, and some of it inadmissible evidence, instead of the ultimate facts. Failure to strike out matter is, however, not reversible error unless prejudice has been caused. Lincoln, etc., Co. v. Hutchins, 55 Neb. 158, 75 N. W. 538; Chicago, B. & Q. R. R. Co. v. Oyster, 58 Neb. 2, 78 N. W. 359. Nor is it error to overrule a motion which is too broad in its scope. Smith v. Meyers, 54 Neb. 1, 74 N. W. 277; Zimmerer v. Fremont Bank, 59 Neb. 661, 81 N. W. 849. Plaintiff was entitled to put up the plea of waiver of the forfeiture on this insurance policy, but not to set up all the evidentiary facts going to show such waiver. The motion makes no distinction between the proper and necessary portions of these paragraphs and the improper, but strikes at them all, and it was not error to overrule it.

Complaint is made of the admission in evidence of the draft, but that was especially excluded from the consideration of the jury by the instructions of the court. Counsel also complain of the admission in evidence of conversations and transactions of compromise which took place after the plaintiff in error had declared the policy void. In our opinion, the complaint is not well taken, because the question whether or not the defendant had declared the policy void is among the issues and is disputed in the evidence. The negotiations for a settlement are not admissible as independent evidence to establish a claim, but specific portions of them, which tend to indicate that the defendant, after having full knowledge of the existence of the mortgage, treated the policy as valid and in force, would be admissible for the purpose of establishing that fact wholly independent of any question as to whether such admission and such treatment of the policy as valid, occurred during negotiations for a settlement, or under other circumstances. 1 Greenleaf's Evidence (Redfield's Ed.) § 192.

Complaint is made that the court refused to submit special findings. We cannot find from the record anything going to show that they were refused by the court, and, if they were, we cannot see that the refusal was error. They were two in number, and the second one related to matter wholly outside of the issues, as they were finally settled by the court.

Complaint is made of the refusal of instructions asked by the defendant, but the record is silent as to whether they were brought to the attention of the court, and there appears no exception to their refusal, if they were refused. There is nothing to indicate such refusal.

Complaint is made of the third instructi given by the court, which was endeavori to state the issues raised by the plainti reply. We suppose the point of the obj tion is that it includes among the issu raised by that reply the making of effo at settlement for less than the amount of policy. This is merely stated as be claimed by the reply, and seems to ha been cured by the subsequent instructi of the court as to the effect of such effo in striking out from the consideration the jury the $500 draft. The jury was t to disregard such evidence.

The real question in the case is raised the objections to the fifth instruction gi by the court, which instruction is as follo "Parties to a contract containing stipulati releasing him from liability thereon is liberty, if he sees fit, to not insist on s conditions, but to waive the same; but, order that the acts of such parties shall c stitute a waiver, he must act with full kno edge of the circumstances releasing him. if, with a full knowledge of the circumstan releasing him, he continues to treat the c tract as of binding force, and induce other party to act in that belief, he will deemed to have waived the conditions leasing him. And in this case, if the pl tiff has established, by a preponderance the evidence, that the defendant compa was notified of the loss of said barn, that in pursuance of said notice it sent the home of the plaintiff its state agent adjuster, before going to the home of plaintiff, had full knowledge of the existe of said mortgage, and that the same placed on the property without the cons of the company, and with this knowle intentionally gave plaintiff to understand t he was willing and ready to pay the loss full, and induced plaintiff to come from home to the city of Lexington for the p pose of receiving the pay for said loss, induced plaintiff to assist in making an e mate of the cost of said building, and duced plaintiff to make and furnish pr of said loss as provided by the terms of s policy of insurance, this conduct by s agent or defendant would be sufficient establish the claim of plaintiff that the s condition of forfeiture in the policy had be waived by the defendant company; and, you find that each and all of these acts ha been established by a preponderance of evidence, it would then be your duty to f for the plaintiff in the sum of $1,000.00, w interest thereon at seven per cent. from S tember 29th, 1897."

This instruction, however, is not open the objection urged against it. It does assume knowledge on the part of the juster either as to the existence of the mo gage or as to the nonconsent of the compa to its being placed upon the property. does, however, indicate that the facts as calling for proof of loss which had be

testified to by plaintiff would amount to a waiver of the forfeiture, if the adjuster had such knowledge. It is not claimed that this is error. There is certainly evidence to sustain the finding of the jury that the adjuster had such knowledge, ample to warrant the court in submitting that question.

The only fact which Mr. Rowntree, the adjuster, claims he did not know in reference to the matter, was whether or not a special permission to place this mortgage upon the property had been given. There is certainly evidence in the record tending to show that the defendant had knowledge of the facts amply sufficient to put him upon his guard on this point, among them his procuring a certified copy of the mortgage before visiting the plaintiff, and his own testimony as to the practice of the company in attaching copies of such permissions to the application. It is impossible to conclude that this verdict is not supported by evidence as to the knowledge of defendant concerning the terms of its own contract, and there is no question at all that the facts as to the mortgage had been obtained by Mr. Rowntree from the record before any of these facts which are claimed to constitute a waiver occurred.

It is therefore recommended that the judgment of the district court be affirmed.

DAY and KIRKPATRICK, CC., concur.

Affirmed.

NEWS PUB. CO. v. TYNDALE et al.

(Supreme Court of Nebraska. Jan. 8, 1902.)

CHATTEL MORTGAGE—FAILURE TO RECORD—FRAUD.

1. The fact that a chattel mortgage was withheld from record from January 17th to March 12th following, with intent to avoid injury to mortgagor's credit, does not render it fraudulent as against one whose first dealing with mortgagor was on April 8th afterwards, and who does not appear to have examined the chattel mortgage records during the transactions.

Commissioners' Opinion. Department No. 1. Appeal from District Court, Lancaster County; Cornish, Judge.

"Not to be officially reported."

Action by the News Publishing Company against Hector H. Tyndale and others. Judgment for plaintiff, and Tyndale appeals. Reversed.

John P. Maule, for appellant. E. F. Pettis, for appellee.

HASTINGS, C. In this case there seem to be two questions: First, as to the right of the intervener and cross-petitioner, the Brown & Clark Paper Company, to come into this action and set up here their claim as against the defendant Hector H. Tyndale to have their judgment against the News Publishing Company satisfied by him; second, whether the evidence supports the finding of the trial court that the mortgage held by Hector H. Tyndale against the News Publishing Company was fraudulent and void as against that company's creditors, and especially as against the intervener, and the latter consequently entitled to a satisfaction of its judgment out of the mortgaged property.

On December 16, 1896, the News Publishing Company, and Sam E. Low and Hans T. Westerman, stockholders, filed a petition in the Lancaster county district court to enjoin a sale of the entire plant and good will of the News Publishing Company, which was advertised to take place on that day by Hector H. Tyndale as mortgagee. The injunction was sought mainly on the ground that, in consideration of an assignment of all the stock of the company and delivery of possession of its plant to one Troilus H. Tyndale, the mortgagee had agreed that the debt should be extended until September 1, 1897. On December 21st the defendants Hector H. Tyndale and Troilus H. Tyndale answered, denying the allegations of the extension agreement, and setting out another and different one, whereby the possession of the plant was turned over to the defendants for the purpose of a foreclosure of the chattel mortgage. On December 22d, the Brown & Clark Paper Company filed a petition of intervention, setting out its recovery on December 8, 1896, in the county court of Lancaster county, of a judgment against the News Publishing Company for $323.28 and costs of $7; that this judgment was still in force, and execution upon it had been issued and returned nulla bona; that it was rendered upon an indebtedness incurred by the publishing company before March 12, 1896, the date of the recording of Tyndale's mortgage; that the intervener, at the time of the furnishing of the goods, had no knowledge of the mortgage; that the goods were used for the publication of the newspaper, and with the full knowledge and consent of the mortgagee; that the mortgagee was in fact the owner of the entire plant and stock of the company before taking possession of it, and his mortgage merged; that his mortgage was void, because not properly executed, and withheld from record until after the intervener had become a creditor, and never recorded as required by law; that it covered property not subject of chattel mortgage; that the mortgagee permitted the mortgagor to remain in possession of the property, and dispose of it in the usual course of business; that the News Publishing Company was insolvent, and that the mortgagee was about to convert the property into money. Some time subsequently an amendment was made, charging that the directors and stockholders of the News Publishing Company were sureties upon the indebtedness to Tyndale, which the mortgage was given to secure, and the mortgage was therefore void; also alleging that

¶ 1. See Fraudulent Conveyances, vol. 24, Cent. Dig. § 492.

there had been a previous finding that the goods were furnished to the mortgagee; that the paper company had no remedy at law, and was entitled to an accounting; that the value of the property was over $12,000; and that such finding and decree were binding upon Tyndale. May 9, 1898, Hector H. Tyndale answered this petition of intervention that it did not state facts enough to constitute a cause of action against him; that he had loaned the publishing company $6,000, which was represented by three promissory notes, secured by the mortgage in question, which bore date of January 17, 1896; that on March 12th the mortgage was filed for record; that September 22d, with the consent of the officers and stockholders of the publishing company, he took possession of the property, and on April 26, 1897, sold it under the mortgage as provided by law, and bought it in himself at $6,000; that the Brown & Clark Paper Company became creditors of the publishing company long after the filing of the mortgage, and had notice of it; that the intervener had no lien on the property by mortgage, levy, garnishment, or otherwise; that the property could have been levied upon, and that the intervener's petition discloses no right on its part to intervene in the action. The action on the part of plaintiffs in the meanwhile had long previously been dismissed. The trial court found the intervener's judgment was rendered as alleged; execution on it issued and returned; that it was still in force; that the entire property of the publishing company had been seized under the mortgage, and disposed of by Tyndale; that it was at all times worth more than the amount of the judgment and costs; that the mortgage was for money loaned as alleged; that when it was given the officers of the publishing company expected it would not be filed immediately, but kept from the knowledge of the public and its creditors; that, while no agreement was made by Tyndale to that effect, he knew of such expectation, and shared in the intent; that the mortgage was kept from the record from January 17th to March, 1896, to prevent the public and creditors from knowing of its existence, and with the intent to aid the publishing company in continuance of its business and dealings with its creditors; and that such intent of Tyndale's was fraudulent as to the publishing company's creditors, and the mortgage, therefore, void as to the paper company. Decree was entered against Tyndale for the amount of the judgment against the publishing company and the costs of this action, and execution awarded. From this decree is the appeal.

Beyond all doubt, if Tyndale's mortgage was fraudulent and void, as found by the court, it was competent, in a proper proceeding, to charge him, as trustee through his own wrong of the property of the publishing company, with the payment of the judgment against it. The question remains, what right had the paper company to come into this tion, or interfere with its progress? It true that the paper company had a judgm against the publishing company, which v unsatisfied, and on which an execution been returned nulla bona. This, howev did not give to the paper company any upon or interest in any specific perso property. It seems to be well enough tablished that the right of intervention reserved for those who have a distinct lo interest in the subject-matter of the act and in the result of the litigation. Kan & C. P. R. Co. v. Fitzgerald, 33 Neb. 137, N. W. 1100. In this case it is difficult to what interest the intervener had in the qu tion as to whether or not the publishing co pany and its officers should be able to p vent the sale. The property was in the ha of the mortgagee, and had been since preceding September. It is true that, if mortgage was fraudulent, Tyndale v chargeable, as trustee, with the property its proceeds, and his agents in whose poss sion it was could have been garnished. is probable, however, that objection to proceeding by intervention was waived answering to the merits and by taking t appeal. The objection taken is not to jurisdiction of Tyndale's person, but to sufficiency of the facts alleged to establ a right of recovery as to him. The rec fails to disclose any objection made or ception taken to the allowance of the fil of intervener's petition, or any objection fore answering to the merits, and the obj tion in the answer, accompanied by a p to the merits, without any previous obj tion, would seem too late.

The question as to the sufficiency of evidence to sustain the finding of the t court remains. As above stated, the t court finds that the mortgage was made January 17, 1896, and was withheld fr record until March 12, 1896. The allegat of intervener's petition was that the go for which judgment was rendered were f nished before this recording, and with knowledge of the existence of the mortga The record by no means bears out this pl It seems from the evidence that the go were ordered by the publishing compa on April 8th, and were furnished on Ap 28th, a month and a half after the reco ing of the mortgage. No question is rais as to actual loaning of the money, and t court finds that the defendant advanced The mortgage was on record, and, unless intent to do a harm, which happened, so as any evidence taken in this case disclos is sufficient to deprive the defendant of t security taken for money actually advanc then there was no fraud on his part, a there can be no recovery on the intervene Granting that the evidence shows all th the court finds, viz., that from February 17 until March 12th the defendant Tyndale h this mortgage off the records without a

Digitized by Google

definite agreement to that effect, in order to avoid injury to the publishing company's credit, does that avail to render the mortgage fraudulent as to this debt for merchandise ordered by the publishing company on April 8th, and delivered on April 28th? It must be remembered that there is nobody here objecting to this mortgage except the Brown & Clark Paper Company. There is no creditor in existence whose claim accrued during the time the mortgage was not of record, so far as the evidence in this case discloses. It does not appear, as far as our examination discovers, that the Brown & Clark Paper Company had any prior dealings with the publishing company, and certainly not that it ever caused any examination of the records for chattel mortgages during the time that this one remained unrecorded. It even appears affirmatively that this transaction of April 8th was the first one had between the parties. Evidently, so far as the intervener is concerned, or any one else on this showing, no possible harm resulted from this mortgage not being recorded from January 17th to March 12th. That being the case, it is impossible to see how the intent to save the credit of the publishing company, if it existed on the part of defendant Tyndale, can be claimed as a ground of recovery by the intervener in this case.

It is therefore recommended that the judgment of the district court be reversed, and the petition of intervention dismissed.

DAY and KIRKPATRICK, CC., concur.

Reversed.

ALLING v. WOODARD et al.

(Supreme Court of Nebraska. Dec. 18, 1901.)

MORTGAGE FORECLOSURE — PETITION — TAX CERTIFICATE—FORECLOSURE OF TAX LIEN.

1. That no proceedings at law have been had for the recovery of the debt secured by the mortgage is a material allegation in a petition for the foreclosure of a mortgage, and, when put in issue, must be proved.

2. A tax certificate is presumptive evidence of the regularity of all proceedings leading up to the sale, including the assessment and levy. Merrill v. Wright, 59 N. W. 787, 41 Neb. 351, overruled.

3. In an action to foreclose a tax lien, by the assignee thereof, in computing the amount due thereon it is error to include subsequent taxes paid by the assignor subsequent to the assignment.

Commissioners' Opinion. Department No. 3. Appeal from District Court, Dawes County; Westover, Judge.

"Not to be officially reported."

Action by William R. Alling, trustee, against Nellie Woodard and others. From the judgment the defendant Woodard appeals. Reversed.

Allen G. Fisher, for appellant. A. W. Crites, for appellee.

ALBERT, C. This action was brought by the plaintiff to foreclose a real estate mortgage executed by the defendant Nellie Woodard. The New England Loan & Trust Company intervened, and asked the foreclosure of a tax lien on the premises by virtue of a tax sale on said premises to one T. A. Thompson, who, on the 1st day of October, 1893, assigned the certificate of such sale to one I. C. Cannon, who, it is alleged, on or about the 1st day of June, 1897, assigned said certificate to the intervener. The defendant Nellie Woodard denied all the allegations both of the petition of the plaintiff and that of the intervener. The trial court found in favor of the plaintiff, and that its mortgage was a second lien on the premises, and in favor of the intervener, and that it had a first lien. The premises were sold under the decree, and the sale confirmed. The defendant Nellie Woodard brings the case here on appeal.

As against the decree in favor of the plaintiff it is urged that there is a total want of proof in support of the allegation of the petition that proceedings at law have been had for the recovery of a debt secured by the mortgage. This is a material allegation, and was put in issue by the answer, and is wholly unsupported by the evidence. Under the repeated holdings of this court, such omission is fatal to plaintiff's decree. Kirby v. Schrader, 58 Neb. 316, 78 N. W. 616; Jones v. Burtis, 57 Neb. 604, 78 N. W. 261. As against the decree in favor of the intervener, it is urged that there is no competent evidence of any levy or assessment. The certificates issued to the purchaser by the treasurer in pursuance of the tax sale, under which the intervener claims, was received in evidence. Section 116 of the revenue act (Comp. St. 1901, c. 77, art. 1) provides that such certificate "shall be presumptive evidence of the regularity of all prior proceedings." The phrase, "all prior proceedings," in our opinion, includes every step leading up to the tax sale, including the levy and assessment. In that view of the case the evidence is sufficient on the point named. The tax sale to Thompson took place November 7, 1892. The certificate was assigned to Cannon October 1, 1893. On October 23, 1893, Thompson paid the taxes for 1892, and on the 11th day of June, 1894, paid the taxes of 1893. Both of these payments were made after the assignment of the certificate to Cannon, and both, with interest thereon, are included in the amount found due the intervener. In this, we think, there was error. Whatever may have been the reason for the payment of these taxes by Thompson after his assignment of the certificate, it is clear to our minds that such payments, on the state of facts shown by the record, did not inure to the benefit of the holder of the certificate to such an extent as to make them available to him in an action to foreclose his tax lien. There may be good rea-

Digitized by Google

why this should be included in the decree, but no such reason appears in the record. The amount paid at the time of the tax sale, as shown by the tax certificate, was $20.44. There is no evidence of the payment of any subsequent taxes by the holder of such certificate. The decree of the intervener should have been for $20.44, with interest according to law.

The notice to redeem introduced in evidence is dated July 20, 1894, and recites that "the undersigned being now in possession of and owner of said certificate of purchase," and is signed by Thompson, the original purchaser of the tax sale. The defendant insists that the recital in such notice is conclusive on the intervener that Thompson was the owner of the certificate at the date of the notice, and that, as the record fails to show an assignment by him to any person after that date, there is a failure to prove that the intervener is the owner of the tax lien. We do not concur in that view. It is clearly shown in evidence that Thompson assigned the certificate to Cannon October 1, 1893. Why he thereafter gave the notice to redeem, or why it was introduced in evidence, we are unable to understand, but that its introduction is not conclusive as claimed by the defendant, to our minds, is clear. Objections are also urged to the order of confirmation of the sale for the satisfaction of the decree, but, as the decree must be reversed, it would serve no good purpose to discuss them.

In view of the record, we recommend that the decree of the district court, both as to the plaintiff and the intervener, be reversed, and the cause remanded for further proceedings according to law.

AMES and DUFFIE, CC., concur.

Reversed and remanded.

MIZNER v. SCHOOL DIST. NO. 11 OF SHERMAN COUNTY et al.

(Supreme Court of Nebraska. Dec. 18, 1901.)

SCHOOL DISTRICT—RESIDENCE OF PUPILS—ATTENDANCE—WRONGFUL EXCLUSION—INJUNCTION.

1. Evidence examined, and *held* sufficient to support a finding of the court that a child was a bona fide resident of a school district.
2. The father of a child of school age, or one standing in loco parentis to the child, may maintain an action to compel the directors of a school district to allow the child to attend a school of which such child is a bona fide resident.
3. Where a child of school age is wrongfully denied admission to the public school of a district, an injunction may properly issue to restrain the directors of the school from interfering with her attendance.

Commissioners' Opinion. Department No. 3. Appeal from District Court, Sherman County; Sullivan, Judge.

"Not to be officially reported."

Action by William Mizner against School District No. 11, of Sherman county, and others. Judgment for plaintiff, and defendants appeal. Affirmed.

Wall & Williams, for appellants. R. J. Nightingale, for appellee.

DUFFIE, C. The facts in this case are few, and practically undisputed. The defendants Niles, Ryerson, and Zahn constitute the school board of School District No. 11 of Sherman county, Neb. William Mizner, the plaintiff, is a resident of said district. Ivy Bellinger is his sister-in-law, and came to reside with him some time in December, 1899. Eli Bellinger, the father of Ivy Bellinger, was a resident of Custer county, Neb., and a bona fide resident of District No. 132 of Custer county, and Ivy resided with her father and attended school in Custer county up to about December 1, 1899. After Ivy came to live with the plaintiff, she commenced to attend school in District No. 11 in Sherman county. No permission was sought or obtained from the school board. After having attended the school for some time, the members of the board met and passed a resolution prohibiting her attendance, and then ejected her from the school. Thereupon this action was brought to restrain the defendants from interfering with her attendance, and to restrain them from ejecting her from the school, or denying her the privileges thereof. Upon a hearing the court entered a decree in favor of the plaintiff, and enjoined the defendants from interfering with Ivy's attendance at school. From this decree the defendants have appealed to this court.

Appellants insist that Ivy Bellinger is not a bona fide resident of School District No. 11, and not entitled to the privileges of the school in that district, except with the consent of the school board and the payment of tuition. The court found the facts as follows: "First. That the parents of the child, Ivy Bellinger, are now, and for more than three years last past have been, residents of Custer County, Nebraska. Second. That the plaintiff, at the time this suit was begun, and for a period prior thereto, was a resident of Sherman county, and of School District No. 11 of Sherman county. Third. That on or about December 2, 1899, the parents and the plaintiff with the child entered into an agreement whereby it was agreed by the parents that the child should make her home with the plaintiff at his home in School District No. 11, and in pursuance thereof the child began to make her home with the plaintiff in said school district on December 2, 1899. Fourth. That at the time the agreement was made between the plaintiff and the parents, and at the time the child began living with plaintiff, no definite time within the understanding of the parties was fixed as to when, if at all, she should leave the home of the plaintiff, but that she should abandon the home of her parents under and in pursuance of said contract without any intention to immediately return to the home of the parents,

Digitized by Google

or to return at any definite or fixed time, if ever. Fifth. That the child, Ivy Bellinger, at the time the suit was instituted, was a resident of School District No. 11, and that at said time she was of the age of sixteen years. Sixth. That the school board, at the time the suit was instituted, threatened and were about to prevent her by force from attending the school of said district." We think that the evidence would have warranted the court in going farther, and finding that there was a definite agreement between the plaintiff and Ivy Bellinger and her parents that she was to live with him until she attained the age of 21 years, and that during that time he was to care for her as a member of his own family. Under the facts found, we have no doubt that Ivy Bellinger was a bona fide resident of the district. It is true that the home of a child is usually with its parents, but this is not always the case. A guardian may be appointed for a child whose parents are living, and in such case, if the child resides with the guardian, the residence of the guardian would be the residence of the child. So, too, a child may be adopted, and the residence of its adopted parents would be the residence of the child. Where, as in this case, the child, with the consent of her parents, goes to live in the family of another as a member of the family, and under an agreement that that is to be her home, and she is to be cared for and provided with school facilities, she becomes a bona fide resident of the district where living, and the person with whom she resides occupies the relation of a parent, stands in loco parentis, and may demand for her every right to which his own natural child is entitled. It is insisted, however, that, if this be so, the action cannot be maintained in the name of the plaintiff; that it should have been instituted and prosecuted in the name of Ivy Bellinger; that she is the real party in interest. As we have already seen, the plaintiff stands in loco parentis to this child. Not only was it his privilege, but it was his duty, under his agreement with her and her parents, to see that she received such school facilities as the district afforded. It would scarcely be claimed that the plaintiff would not have a right of action against the defendants if they denied to his own child the school facilities offered by the district. In this day and age it is everywhere recognized that the parent is as much interested in the education of his children as are the children themselves; and whenever access to a public school is refused or denied a child no court would deny the parent relief on the ground that he has not sufficient interest in the education of his child to entitle him to bring and maintain an action to secure his legal rights in that regard.

Again, it is urged that injunction will not lie; that, conceding the right of Ivy Bellinger to attend the school, and the denial of that right by the defendants, the proper action is mandamus, and that equity will not interfere to afford relief. No one will attempt to deny the rule that, where an adequate remedy at law exists, equity will not interfere; but did the plaintiff have an adequate remedy at law in this case? Was there any legal remedy which offered the full, adequate, and speedy relief to which the plaintiff was entitled? Ivy was past 16. Her school days were nearly over. She was entitled to, and the plaintiff had the legal right to demand that she should, attend this school from day to day. A denial of school facilities is a serious matter. The damage cannot be measured in dollars and cents. No money compensation would adequately recompense one for a failure to receive even such an education as is afforded by our common schools. The only speedy and adequate relief offered to the plaintiff was a resort to the extraordinary remedy of an injunction. Under the circumstances, we think that he was entitled to appeal to the equity side of the court for this remedy. As before stated, no court of law could adequately measure the damage which he or Ivy might sustain by being expelled from the school, by being denied an education. There is probably no other case where the court would so quickly extend to the aid of the plaintiff its full powers. We are satisfied that the evidence fully warrants the findings of the courts, and that these findings fully support the legal conclusions reached.

We therefore recommend that the decree appealed from be affirmed.

ALBERT and AMES, CC., concur.

Affirmed.

KIRBY v. WATERMAN et al.

(Supreme Court of South Dakota. July 22, 1903.)

MUNICIPAL CORPORATIONS—SPECIAL ASSESSMENTS—SALE OF LAND FOR NONPAYMENT—PRIORITY OF DEED OVER EXISTING MORTGAGE—DEED—SIGNATURE—SEAL—NOTICE.

1. Deeds executed by a city for the nonpayment of assessments for local improvements convey title superior to an existing mortgage on the property.

2. The law of 1890 being simply a revision of the law defining the powers and duties of cities relating to making local improvements and levying special assessments therefor, constituting Comp. Laws 1887, §§ 959–999, which declared that assessments should be a lien on the property, a mortgage on city property executed subsequent to 1887, and before the law of 1890, was not affected by such later act.

3. Laws 1890, p. 98, c. 37, art. 16, § 32, prescribes the forms of a deed conveying land for the nonpayment of special assessments, and concludes as follows: "In testimony whereof the city treasurer * * * has hereunto set his hand and seal," etc. Section 34, p. 99, provides that the deed shall be executed under the "hand" of the city treasurer, attested by the city auditor under the seal of the city. *Held*, that the omission of the seal to the sig-

nature of the city treasurer constitutes no defect in the deed.

4. Since the law of 1890 relating to special assessments for local improvements, and providing for the sale of land for the nonpayment of assessments levied thereon, makes no provision for the giving of notice to the person in whose name the land is assessed that a deed thereof will be demanded, and since Laws 1891, p. 68, c. 14, § 121, requiring the holder of a tax certificate to give notice before obtaining a tax deed, is not applicable to the sale of land for the nonpayment of special assessments, a deed by a city for the nonpayment of assessments is valid, without the giving of any notice that a deed will be demanded.

5. The execution of a deed by a city, conveying land for the nonpayment of special assessments, is prima facie evidence of the giving of notice to the person in whose name the land was assessed that a deed would be demanded, if any such notice were required.

Appeal from Circuit Court, Minnehaha County.

Action by Ella Kirby against E. L. Waterman and others. From a judgment for plaintiff, defendant Waterman appeals. Affirmed.

Davis, Lyon & Gates, for appellant. Joe Kirby, for respondent.

CORSON, J. This is an action to quiet title to a certain city lot in the city of Sioux Falls, to which the plaintiff claims title by virtue of two certain city deeds executed for street assessments, and a county treasurer's deed for taxes levied for county and state purposes. Findings and judgment were in favor of the plaintiff, and the defendant Waterman appeals. The findings of the court are, in substance, as follows: That in February, 1889, one Peter Ferguson, then the owner of the lot, mortgaged the same for $575, which mortgage was duly recorded; that afterwards the mortgage was assigned to the defendant Waterman, who is the present owner thereof; that on December 5, 1892, the property was legally sold by the city treasurer of Sioux Falls for the nonpayment of an assessment for local improvements made August 16, 1892, and also for an assessment for local improvements made August 25, 1892, and that certificates of purchase were duly issued and deeds duly executed for the same on December 11, 1894, and that said deeds were duly recorded; that for more than three years last past the plaintiff has been in the open and notorious possession of the said property, claiming title thereto under said tax deeds; that the plaintiff is the absolute owner in fee simple of said property; that the lien of the said mortgage of defendant Waterman has been extinguished by reason of said tax deeds; and that the defendants have no interest in the said property. The court concluded that the plaintiff is the absolute owner in fee simple of said property; that the defendants have no right, title, or lien therein; and that the said mortgage of the defendant Waterman is extinguished and of no validity as against the plaintiff.

Defendant Waterman requested the court to make certain findings, and to make the following conclusion of law, among others: That the mortgage now owned by the said Waterman is a valid and subsisting lien upon the said premises, and paramount and superior to the claim of the plaintiff. The findings and conclusions requested were denied by the court, and the ruling denying the same is assigned as error. The appellant contends that as his mortgage was executed in 1889, and the respondent's deeds executed for special assessments for improvements made in 1892, under a law that had no existence until 1890, the lien of the appellant's mortgage was superior and paramount to the title acquired by respondent under her two city deeds. Respondent insists, however, that the title conveyed by the two city deeds was superior and paramount to the lien of the mortgage. She also insists that the debt for which the mortgage was executed was barred by the statute of limitations, and that the lien of the mortgage was also barred, and hence, assuming that plaintiff's mortgage at the time the two city deeds were executed constituted a superior and paramount lien at the time this action was commenced, it had ceased to constitute such lien by reason of its being so barred by the statute. We are of the opinion that the appellant's contention cannot be sustained, and that the respondent is right in insisting that the title conveyed by the two deeds was superior and paramount to the lien of the plaintiff's mortgage, even assuming, for the purposes of this decision without deciding, that the defendant's mortgage was not barred by the statute of limitations, and was a valid and subsisting mortgage, at the time of the commencement of the action. A party who loans money upon city property, secured by mortgage, takes the security subject to the right of the city to improve its streets and alleys, and to levy special assessments thereon, and enforce the collection by a sale of the property. It is uniformly held by the courts that a party loaning money upon real property, and taking a mortgage as security therefor, takes the same subject to the rights of the state, county, and municipality to levy taxes thereon for the support of the same; and we see no reason why the same rule should not apply to assessments made for street improvements, where a mortgage is taken upon the property, though executed before the improvements were made or ordered. It is too well settled to require the citation of authorities that the property of one purchaser before the ordering and making of street improvements is subject to an assessment for such improvements, and a mortgagee can occupy no better position than the owner of the property. No case has been called to our attention supporting the views of the appellant, and we think none can be found.

It is contended by the appellant that the law laid down in the case of Miller v. Ande

Digitized by Google

son, 1 S. D. 539, 47 N. W. 957, 11 L. R. A. 317, should be applied to the case at bar, but we are of the opinion that the rule established in that case has no application to the case now before us.

The appellant further contends that, by reason of the fact that his mortgage was executed prior to the passage of the law of 1890, his rights cannot be affected by the provisions of that law, but this contention is untenable. The act of 1890 is simply a revision of the law defining the powers and duties of the cities relating to making improvements and levying special assessments enacted in 1887, and constituting sections 955 to 999, inclusive, of the Compiled Laws of 1887. Section 979, after prescribing the duties of the city officers relating to such assessments, declares, "Said assessments so made and returned if approved by the council shall be a lien upon said lots and parcels of land on and after such approval." At the time, therefore, the appellant's mortgage was executed, the city was given a lien upon all property for improvements ordered made by the city, and the law of 1890 made similar provisions. The law of 1890, having imposed no new obligations upon parties holding mortgages upon such property, did not change the rights of the appellant.

It is further contended by the appellant that the deeds made by the city were void upon their face, for the reason that the city treasurer did not affix thereto his official seal; and in support of this contention he calls our attention to section 32, art. 16, c. 37, p. 98, of the Laws of 1890. The form of the deed therein prescribed concludes as follows: "In testimony whereof the city treasurer of the city of —— has hereunto set his hand and seal on the day and year aforesaid." There would be merit in the appellant's contention were it not for the provisions of section 34 of the same article (page 99), which reads as follows: "The treasurer shall issue to the owner thereof a deed in the name of the city as provided in section 32 of this article which deed shall be executed under his hand and the execution shall be attested by the city auditor under the seal of the city and such deed shall vest in the grantee an absolute estate in fee simple in such land, subject, however, to all claims which the state, county or city may have thereon for taxes and shall be presumptive evidence of the facts therein recited and prima facie evidence of the regularity of all the proceedings." While there is apparently a conflict between the form of the deed as given in section 32 and the manner of executing the same prescribed by section 34, we are of the opinion that the latter section must control, it being the latest expression of the legislative will. Mr. Sutherland, in his work on Statutory Construction, in speaking on this subject, says: "If a conflict exists between two statutes or provisions, the earlier in enactment or position is repealed by the latter. * * * Where there is an irreconcilable conflict between different sections or parts of the same statute, the last words stand, and those which are in conflict with them, so far as there is a conflict, are repealed; that is, the part of the statute later in position in the same act or section is deemed later in time, and prevails over repugnant parts occurring before, though enacted and to take effect at the same time." Sutherland on Statutory Construction, § 160. It will be noticed that by section 34 of article 16, above referred to, the deed is to be executed under the hand of the treasurer and to be attested by the city auditor under the seal of the city. The omission of the seal, therefore, to the signature of the treasurer constitutes no defect in the execution of the deeds as they are attested by the city auditor under the seal of the city as provided in section 34.

Appellant further contends that the court erred in not making the findings and conclusions of law presented by the appellant, but, in the view we take of the case, the court was clearly right in refusing to make the findings and conclusions requested.

The learned counsel for the appellant further contends that it does not affirmatively appear that the notice was given that deeds would be demanded prior to the execution of the same as provided by section 121, c. 14, p. 68, Laws 1891. There appears to be no provision in the law of 1890 for giving such notice before taking out the deed as is provided in the section above referred to, and that section seems to apply only to deeds executed by the county treasurer. It will be noticed that the term "taxes" is used in the section, but there is in terms no reference to delinquent assessments for city improvements. This court would not be justified, therefore, in holding that the law requiring such notice under the general taxation law applies to deeds executed for delinquent city assessments. The Legislature having provided the method for assessing and collecting assessments for city improvements, the deed to be executed therefor, and the effect of such deed, presumptively has provided all the safeguards it intended for the protection of the owners of property; and if, therefore, the law is defective, the Legislature alone can provide the remedy. There may be, and probably is, the same reason for requiring notice to be given to the owner or occupant of city property that a deed for delinquent city assessment will be demanded if the property is not redeemed within the time specified, that is required in the case of sale by the county, but that is a question entirely within the discretion of the Legislature. If, however, such a notice was required, the execution of the deed is prima facie evidence that the same was given, and there being no evidence in the record showing that it was not given, the contention of the appellant cannot be sustained.

Digitized by Google

The appellant, in his brief, discusses at considerable length the validity of the county tax deed; but as the court made no finding as to that deed, and based its decision entirely upon the city tax deeds, it will not be necessary to further consider the county treasurer's deed. The city assessment deeds being valid, the court was clearly right in holding plaintiff's title thereunder superior and paramount to the lien of the defendant's mortgage.

The judgment of the court below and order denying a new trial are affirmed.

RAMSDELL v. DUXBERRY.

(Supreme Court of South Dakota. July 22, 1903.)

ACTIONS—SERVICE OF SUMMONS—TRIAL BY STIPULATION—VOLUNTARY APPEARANCE—JURISDICTION.

1. Comp. Laws 1887, § 4892, provides that civil actions shall be commenced by service of summons; and section 4904 provides that from the time of the service the court is deemed to have acquired jurisdiction, and that a voluntary appearance of a defendant is equivalent to personal service of the summons on him. *Held*, that where a cause in justice court was, by agreement between the parties, transferred to the circuit court, and there tried, the latter court had jurisdiction, inasmuch as the voluntary appearance of the defendant was equivalent to the service of a summons on him.

Corson, J., dissenting.

Appeal from Circuit Court, McCook County.

Action by H. A. Ramsdell against Hartwell Duxberry. On rehearing. Affirmed.

For original opinion, see 85 N. W. 221.

J. N. Crow and J. L. Hannett, for appellant. E. H. Wilson, for respondent.

HANEY, P. J. The questions presented by this appeal are stated in our former decision. Ramsdell v. Duxberry, 14 S. D. 222, 85 N. W. 221. The views therein expressed are adhered to, except as to the conclusion that the lower court was without jurisdiction because no summons in the action was actually issued. The court not only had authority to hear and determine the class of controversies to which the one presented by the pleadings belonged, but it had authority to hear and determine that particular controversy, provided the parties to be affected by its judgment had proper notice of the hearing. There was no want of jurisdiction as to the subject-matter, the only question being as to the jurisdiction of the parties. In this state civil actions are commenced by the service of a summons. Comp. Laws 1887, § 4892. "From the time of the service of the summons in a civil action, or the allowance of a provisional remedy, the court is deemed to have acquired jurisdiction, and to have control of all the subsequent proceedings. A voluntary appearance of a defendant is equivalent to personal service of the summons upon him." Id. § 4904. In this case there was certainly a voluntary appearance of the defendant, which, in the plain language of the statute, was "equivalent to the service of the summons upon him." In other words, by reason of defendant's voluntary appearance, a summons was, in law, personally served, and the action was, by operation of law, thereby commenced. The whole of anything embraces all of its parts. If a voluntary appearance is equivalent to personal service of a summons, it is equivalent to everything involved in the personal service of a summons, including its preparation by the party or his attorney. With respect to civil actions in the circuit court, it is scarcely accurate to speak of the summons as being issued. It does not emanate from the court or its clerk. It is merely prepared and subscribed by the party or his attorney, and is of no consequence until served. The essential matter is the service—the giving of notice to the defendant. Notice is the important requisite of jurisdiction. Where there is a voluntary appearance and submission to the power of the court—an active invoking of its power—as in the case at bar, there is certainly no want of notice. Therefore, after more mature reflection, we are constrained to hold that the circuit court did have jurisdiction of both the subject-matter and the parties to this action. This view, it is believed, rests on sound reason, and is less technical and less liable to cause uncertainty regarding the validity of existing judgments than the result reached in our former decision, while it does not sanction any invasion of substantial rights. Certainly the defendant in this action, who voluntarily submitted his controversy to the circuit court, with every opportunity of defense and appeal incident to litigation in that tribunal, and who raised no objection to the jurisdiction of the court until after its judgment went against him, has no just cause to complain if compelled to accept the view he would have strenuously maintained had he been successful.

The former decision of this court is modified as indicated herein, its former judgment is vacated, and the judgment of the circuit court is affirmed.

CORSON, J., dissents.

FISHER v. BETTS et al.

(Supreme Court of North Dakota. July 3, 1903.)

TAXATION—SALES—TAX DEEDS—EVIDENCE—REPEAL OF STATUTE—LEVY BY PERCENTAGES—NOTICE OF REDEMPTION—WITNESS' COMPETENCY—OFFICIAL RECORDS—PRODUCTION IN COURT—CERTIFICATE—APPEAL—REVIEW.

1. In 1890 a revenue law was passed by the Legislature providing for the sale of land for the nonpayment of taxes, and providing for issuing certificates of sale, and the effect of such certificates as evidence. It further provided that the purchaser would be entitled to a deed in a prescribed time. There was a failure to designate the officer who should issue such

Digitized by Google

deed, or what the recitals or effect of the deed should be. In 1891 the Legislature provided for the issuance of deeds under sales made under the 1890 law, and prescribed what the recitals of the deed should be, and defined the effect of such recitals, and provided that the deeds should be prima facie evidence of the regularity of prior proceedings. *Held*, that the two laws should be construed together, the same as though passed at the same time.

2. A sale made under the 1890 law for a tax levied in 1889 constituted a contract between the state and the purchaser, the terms of which are embraced in the law in force when the sale was made.

3. No subsequent legislation could repeal the law in force when the sale was made, so as to change the effect of the deed as evidence in matters of substance, as that would be impairing the validity of a contract.

4. Under the 1891 law the county auditor was the officer to issue deeds under tax sales made thereunder. In 1895 that provision of law was repealed, and it was therein enacted that deeds should be issued by county treasurers. The 1895 law was general in its terms, and made no reference to past sales. *Held*, for reasons given in the opinion, that the law was prospective only, and did not repeal the prior provisions of the law that auditors should issue deeds, and that a deed issued by an auditor on past sales after the 1895 law was in force was not void on its face.

5. The fact that the state board of equalization in 1891 and 1892 levied taxes by percentages, when the law required a levy in specific amounts, does not render such taxes so levied invalid, and is not fatal to a tax deed issued on a sale for delinquent taxes based on such levy.

6. The fact that a tax deed was not supported by evidence showing that notice of the time when the redemption period would expire had been published before the deed was issued is not ground for attacking a tax deed, as the auditor is presumed to have performed that duty, and the recitals of the deed are prima facie evidence that such notice was published.

7. Under a statute making a tax deed, when issued, prima facie evidence of the regularity of all prior tax proceedings, the deed is prima facie evidence that notice of the expiration of the time for redemption was published.

8. A witness not connected with a county office, and not in charge of the records thereof as a public official, clerk, or employé, is not a competent witness to testify to the absence from such office of certain papers; nor is he a competent witness to testify as to the absence from the records of such office of certain material entries.

9. The best evidence in such cases is that of an official in charge of its files and records.

10. Ordinarily the records and files pertaining to the matter under investigation should be produced in court by the official in charge of them.

11. A certificate of an officer to the correctness of copies is not evidence of any other fact recited therein.

12. An officer certifying that a certain motion or other matter is all that the records of his office show that "pertains" to a levy is not evidence that the records do not show other matters pertaining to the levy.

13. In this state the statute provides that public officials are presumed to have regularly performed their duties, until the contrary is shown.

14. Evidence considered, and *held* not to show that certain deeds offered in evidence as a source of title are invalid upon either of the several grounds of objection urged thereto.

15. Matters shown by affidavit or other evidence not in the statement of the case as settled will not be considered in determining what disposition shall be made of a case on appeal.

(Syllabus by the Court.)

Appeal from District Court, Cass County; Charles A. Pollock, Judge.

Action by C. E. Fisher against N. N. Betts and O. P. Smith. Judgment for defendants, and plaintiff appeals. Affirmed.

J. E. Robinson, for appellant. Morrill & Engerud, for respondents.

MORGAN, J. In this action it is sought to determine adverse claims to lots 17 and 18 of Block A1, Northern Pacific addition to the city of Fargo. The plaintiff alleges ownership of said lots, and alleges that the defendants claim a certain estate and interest therein adverse to that of the plaintiff, by virtue of certain alleged assessments of taxes thereon, which said taxes, and the tax sales thereunder, as well as all certificates and deeds based thereon, are void. The plaintiff prays that the defendants set forth such adverse claims, and that they be adjudged void and of no effect. The defendant Betts answered, and alleged the following facts: That said lot 17 was in 1889 subject to taxation in the city of Fargo, and was in that year regularly assessed for taxation, and that the taxes were regularly and lawfully levied thereon; that, upon said taxes remaining unpaid and becoming delinquent, the said lot was duly and regularly sold by the auditor of Cass county, after all the preliminary steps to said sale had been duly complied with, to the defendant O. P. Smith; and that a certificate of such sale was duly issued by said auditor to said Smith on said day. Further answering, the defendant alleges that said lot was assessed regularly and lawfully in 1892, and, the taxes thus assessed becoming delinquent, the said lot was regularly sold by the auditor to said Smith on December 5, 1893, and a certificate of such sale issued to said Smith on that day; that the defendant Betts paid all the taxes levied on said lot during the years 1890 and 1891 and during the years from 1893 to 1899, inclusive; that on the 4th day of April, 1894, a deed to said lot was regularly issued to said Smith by said auditor, based upon the certificate of sale of the same issued on December 2, 1890, which vested in said Smith the absolute fee-simple title to said lot; that more than three years had elapsed since said deed was recorded before this action was commenced, in consequence of which this action is barred. The answer also sets forth similar allegations in regard to lot 18 of said block, and alleges that said defendant Smith secured an absolute title to said lot by virtue of a tax deed issued to him by the auditor of said county, based upon a certificate of sale of said lot dated December 6, 1892, upon a sale made upon the delinquent taxes for the year 1891; that said deed was dated January 15, 1896, and filed for record on the 10th of August, 1896; that said Smith conveyed both of said lots to defendant Betts on the 28th day of

Digitized by Google

February, 1899; and that he is now the owner thereof in fee simple. The answer contains allegations of ownership based on other tax deeds, but no claims are made thereto under the evidence by virtue of said deeds; hence no mention will be made of them. After making findings of fact in favor of the defendants, the district judge entered judgment on said findings in favor of the defendants. From such judgment the plaintiff has appealed to this court, and requests a review of all the issues in this court.

In the year 1890, when lot 17 was first sold for the delinquent taxes thereon for the year 1889, section 72, c. 132, p. 404, of the revenue law of 1890, was in force, and provided as follows: "Such certificate shall in all cases be prima facie evidence that all the requirements of the law with respect to the sale have been duly complied with, and that the grantee named therein is entitled to a deed therefor after the time of redemption has expired." It will be seen that neither this section nor the revenue law of 1890 made any provision as to the issuing of deeds upon sales made pursuant thereto. In March, 1891, the Legislature, recognizing the omission by the Legislature of 1890 to make any provision for issuing deeds under tax sales made thereunder, enacted section 110, c. 100, p. 271, of the Laws of 1891, which is as follows: "Sec. 7. That the following section be added to said chapter 132, to be known as section 110: 'Sec. 110. At the expiration of the time for redemption of lands sold for delinquent taxes, as provided in section 103 of chapter 132 of Laws of 1890, the county auditor of the county in which the sale of lands took place shall execute to the purchaser, his heirs or assigns, in the name of the state, a deed of the land remaining unredeemed, which shall vest in the grantee an absolute estate in fee simple in such land, subject, however, to all the claims which the state may have thereon for taxes or other liens or incumbrances. Such deed shall be issued by the county auditor under the seal of the county, and shall be conclusive evidence of the truth of all the facts therein recited and prima facie evidence of the regularity of all the proceedings, from the valuation of the land by the assessor up to the execution of the deed. Such deed shall be substantially in the following form:'" (Here follows the form of deed.) This section supplemented the law of 1890, so far as the form and the effect of deeds to be issued on sales under the law of 1890 were concerned, and fulfilled the obligation contained in the law of 1890 that purchasers were entitled to a deed. Before the law of 1890 was repealed a deed had been issued for lot 17, sold in 1890.

In 1895, when the Revised Code was enacted, section 72, c. 132, p. 404, of the Laws of 1890, and section 7, c. 100, p. 271, of the Laws of 1891, were expressly repealed, and another revenue law was enacted. This new law provided, among other things, that the treasurer of the county should issue tax deeds, and not the auditor, as provided by the Laws of 1891, set forth above. Said sections of the law of 1895 are as follows:

"Sec. 1267. If no person shall redeem such lands within two years, at any time after the expiration thereof and on production of the certificate of purchase, the treasurer of the county in which the sale of such lands took place shall execute to the purchaser, his heirs or assigns, in the name of the state, a deed of the land remaining unredeemed, which shall vest in the grantee an absolute estate in fee simple in such land, subject, however, to all the claims which the state may have thereon for taxes, or other liens, or incumbrances.

"Sec. 1268. Such deeds shall be executed by the county treasurer under his hand and the execution thereof shall be attested by the county auditor with the county seal and such deed shall be conclusive evidence of the truth of all the facts therein recited and of the regularity of all of the proceedings from the assessment and valuation of the land by the assessor up to the execution of the deed, and such deed shall be substantially in the following form, or other equivalent form:" (Here follows form of deed.) Both of the sections quoted were expressly repealed in 1897.

The questions presented for determination may be summarized as follows: (1) The effect upon the sales of 1891 and 1892 of the repeal in 1895 of section 72, c. 132, p. 404, of the revenue law of 1890, and the repeal of section 7, c. 100, p. 271 (being added as section 110 to the revenue law of 1890), of the revenue law of 1891; (2) the effect upon the sale of lot 17 in 1890 of the fact that no provision was made in the law of 1890 as to what officer should issue tax deeds upon sales made pursuant thereto; (3) the effect of the 1896 deed of lot 18 having been issued by the auditor, when that law provided for the issuance of deeds by the county treasurer; (4) whether said section 7, c. 100, p. 271, Laws 1891, added to the Laws of 1890 as section 110, and making tax deeds prima facie evidence of the regularity of all the proceedings from the valuation of the land by the assessor up to the execution of the deed, could be repealed by the Legislature so as to deprive grantees under the law of 1891 of the benefit of that law defining what effect such deeds were entitled to; (5) whether it is shown by the plaintiff that the deeds issued under the 1890 and 1891 laws are invalid by reason of failure to comply with the provisions of the law in respect to the levy of the taxes, or for any other reasons.

The appellant claims that inasmuch as the laws of 1890 and 1891, under which the deed to lot 17 was issued, were repealed in 1895 the deed has no force as evidence that the tax proceedings were regular, and that the regularity of all acts of all of the taxing

Digitized by Google

officers must be affirmatively established before the deed can be sustained, or can cut off plaintiff's right to the land. He claims that such repeal related solely to the remedy, and that the Legislature has a right to change existing remedies, as such change involves a change of the rules of evidence only. Such contention would not be disputed if the change referred to the remedy only, but if the change of remedy or change in the rules of evidence goes further in its results, and affects contract rights, such changes are inhibited. The Legislature will not be permitted, under the guise of changing a remedy or a rule of evidence, to impair a vested right under an existing contract; and the presumption that all requirements of law with respect to the sale had been complied with, raised by the delivery of the tax certificate, was raised in favor of the tax purchaser by the law in force at the time of his purchase. This presumption was perpetuated by the deed, was a vested matter of right, and could not be taken away by a repeal of these laws. Cooley on Const. Lim. 347. Speaking of section 1639 of the Compiled Laws of 1887, which was practically the same as the section under consideration, this court said in Roberts v. Bank, 8 N. D. 504, 79 N. W. 1049: "This statute entered into the contract of purchase, and became a part thereof." In Smith v. Cleveland, 17 Wis. 573, that court said: "This was a most material and important advantage to the purchaser, and could not have escaped his attention. It concerned the life and validity of the contract. Could the Legislature afterwards step in and take it away, and thus remove the foundation of his right? Can the Legislature say, as to contracts past and executed, that they shall mean one thing to-day and another to-morrow? That they shall have one construction at time of execution, and another afterwards? That the title of the purchaser by deed first indefeasible shall afterwards be defeasible? If these things can be done, then certainly the protection afforded by the Constitution to private rights is very slight and inadequate. But, as has already been often decided, the Legislature is deprived of this power." The following cases are also authority for the same principle: Morgan v. Commissioners, 27 Kan. 89; Forqueran v. Donnally, 7 W. Va. 114; Merrill v. Dearing, 32 Minn. 479, 21 N. W. 721; Marx v. Hanthorn (C. C.) 30 Fed. 579; Hart v. Ross, 64 Ala. 96; Cooley on Tax'n, p. 545.

The deed to lot 17 was actually delivered before the law under which it was issued was repealed. Hence no question can arise upon the validity of the deed to lot 17, so far as this point is concerned. The deed to lot 18 was not delivered until after the law under which it was issued was repealed. The Revised Codes of 1895 provided for issuing tax deeds by county treasurers only. The law under which these sales were made provided for issuing tax deeds by auditors only. The deed to lot 18 was issued by the county auditor after the 1895 Code took effect. It is claimed that the issuing of the deed by the auditor, and not by the treasurer, made the deed void on its face. This would be true if the auditor had no right to issue it. The revenue law of 1895 is entirely prospective. It relates solely to proceedings had under it. It makes no reference to past sales, or to deeds upon past sales. The form of deed prescribed in that law relates only to sales made thereunder, and is not adapted to the provisions of the 1891 law. The purchaser at the 1890 and 1891 sales was entitled to a deed from the state. The state had obligated itself to give him one. It could not deprive him of the right to one. It could not repeal the law under which he became entitled to a deed, without making provision in the new law for a deed the equivalent in substantial matters to that to which he was entitled under the law when the sales were made. The treasurer not having any right to issue the deed under past sales, under the laws of 1895, it must be held that any attempted repeal of the laws of 1891 was inoperative, so far as sales that had occurred under the 1891 law were concerned. The repeal was operative only so far as the future was concerned. The deed having been issued by the auditor, and the law authorizing him to do so not having been repealed, so far as this case is concerned, the deed is not void on its face. It needs no mention that the purchaser has no vested right to a deed by a particular officer. It is his right to a deed which was impaired, if the enactment of this law of 1895 be held valid as a repeal of the 1891 law. See, also, Pounds v. Rodgers, 52 Kan. 558, 35 Pac. 223, 39 Am. St. Rep. 360; Adams v. Beale, 19 Iowa, 61; Garrett v. Wiggins (Ill.) 30 Am. Dec. 653; McCann v. Merriam, 11 Neb. 241, 9 N. W. 96, holding that the law in force at the time of the sale governs as to the terms of the contract of sale. The authority of the auditor to issue the deed was not taken away from him, and such deed is not, therefore, void on its face.

It is next urged that neither of the deeds is admissible in evidence in the absence of an affirmative showing that a notice as to when the time for redemption would expire had been given by the publication of a notice to the person against whom the land was assessed prior to the issuing of the deed, as provided by section 103, c. 132, p. 414, of the revenue law of 1890. This section provides that the time for redemption shall not expire until 60 days after the service of such notice. It is therefore claimed that the deeds were issued before the time for redemption had expired, and are therefore void. Section 7, c. 100, p. 271, of the Laws of 1891, provides that deeds issued thereunder shall be prima facie evidence of the regularity of all the proceedings from the valuat-

Digitized by Google

of the land by the assessor up to the execution of the deed. These deeds recite that the time for redemption from the sale under which they were made had expired, but do not recite the fact of the service of such notice. The deeds are in the precise form prescribed by the Laws of 1891. The contention of the plaintiff is that a showing of compliance with the provisions as to the publication of this notice was an indispensable prerequisite to the production of the deeds in evidence. The defendants contend that the deed, of its own force, shows a compliance with the law requiring notice, by virtue of section 7, c. 100, p. 271, of the Laws of 1891, enacted as section 110 of the Laws of 1890, making the deed prima facie evidence of the regularity of all the proceedings prior thereto. Neither party has offered any proof to the effect that such notice was published or was not published. The question must therefore be determined on the deed and the statute quoted, prescribing what the deed shall be evidence of. Without the publication of such notice, the time for redemption would not expire. Its service would cut off redemption after the deed issued. The notice is a requisite step between the sale and the deed. It does not go to the groundwork of the tax, but is a necessary condition precedent to the issuance of the deed. The Legislature required this notice to be published by the auditor before issuing the deed. Without any proof on the subject, we deem it the better rule to hold that the officer performed his duty and gave the notice. In this state there is a presumption that officers regularly perform their duty, in the absence of any showing to the contrary. Subdivision 15, § 5713a, Rev. Codes 1899. The recital of the deed that the time for redemption had expired is also at least prima facie evidence that the notice was published as required by the statute before the deed was issued. Section 7, c. 100, p. 271, Laws 1891. It is not necessary in this case that the defendants should have made any other than a prima facie showing on this question, as such prima facie showing was not attempted to be rebutted. In Sounkup v. Union Investment Company, 84 Iowa, 448, 51 N. W. 167, 35 Am. St. Rep. 317, the court said: "The deed being prima facie evidence of the regularity of all proceedings prior to its execution, it must be presumed, in the absence of a showing to the contrary, that the notice was served upon the person in whose name the land was taxed. There being no showing to rebut this presumption, we must hold that the notice was properly served on John M. Curless." The following cases tend to sustain defendants' contention that the deed is prima facie evidence of the service of notice of expiration of the time of redemption: Young v. Goodhue (Iowa) 76 N. W. 822; Wilson v. Crafts (Iowa) 9 N. W. 333. In Washington v. Hosp, 43 Kan. 324, 23 Pac. 564, 19 Am. St. Rep. 141, the court said: "More than that, the presumption of law, in the absence of testimony, is that the officer does his duty; and in this case we must assume, from the state of the record, that the county treasurer did that which was required of him. There was no proof offered to overthrow the prima facie case established by the defendant in error." We have examined the cases cited by the attorney for the appellant, from the Supreme Courts of the states of California and Illinois. From our understanding of such cases, we do not consider them in point, as they are based upon statutes entirely different from the statutes of our state. In those states the notice to be given of the expiration of the time for redemption must be given by the purchaser at the tax sale, and not by the auditor. Hence no presumption arises that an official performed his duty, when that duty was to be performed by the purchaser.

It is next contended that the sale was void for the reason that the tax list had no warrant attached to it, authorizing and directing the treasurer to collect the taxes levied as required by the provisions of section 1596 of the Compiled Laws of 1887, and that the sale was void for the further reason that the tax list "contains no certificate * * * showing that it is a tax list, or that the taxes are correctly charged, * * * and that no such certificate or warrant is anywhere annexed or attached to this tax list for the year 1889." In support of this contention, the attorney for the appellant testified at the trial as follows: "I have also examined the tax list of Cass county for the year 1889, on which is listed the property in question, and I find that the tax list for that year is not in any manner authenticated. It contains no warrant under the hand or under the seal of the county commissioners directing the treasurer or auditor or any person to collect the taxes for the year 1889, and it contains no certificate by the county auditor, under the seal of the county, showing that it is a tax list, or that the taxes are correctly charged against the property described in the tax list; and no such certificate or warrant is anywhere annexed or attached to this tax list for the year 1889. It is in no manner authenticated as a tax list." The tax list was not produced in court; nor was the county auditor, the legal custodian of the tax list, nor the county treasurer, the legal custodian of the duplicate tax list after the warrant has been attached to it, called as a witness. The testimony of the attorney is that he simply examined the tax list. It cannot be gathered from his testimony whether he failed to find any warrant at all, or whether there was no warrant sufficient in law as such. From such evidence the court cannot base a finding that there was no warrant at all. It is too indefinite, and seems more like the conclusion of the witness that the papers found

Digitized by Google

did not sufficiently show, as a matter of law, that the tax list was properly certified, or that the warrant attached was sufficient as a matter of law. This testimony does not negative the fact that no warrant or no certificate at all is attached to the tax list. His testimony does not show whether there is an entire absence of a warrant, or whether the warrant is defective, in his opinion, as not complying with the statute. If the warrant or the certificate was there in some form, the court should pass upon its sufficiency, and not the attorney. However, giving the testimony the fullest scope possible —that it negatives the existence of the warrant—the testimony is not the best evidence, and no effect can be given to it in this case. The custodian of the tax list may have known of the existence of the warrant and of the certificate. It is not enough to show that the witness found none by his search. The custodian of these records should have been called, before their existence can properly be negatived. A question similar to the one here involved has been decided at this term in Sykes v. Beck, 96 N. W. 844, and the incompetency of such evidence clearly shown on principle, and also as based on a careful review of the authorities. What is there said is decisive of this case adversely to the contention of the appellant. The attorney for the respondents made seasonable objections to the testimony of the appellant's counsel given on this matter, and as to other matters concerning which he testified. These objections are urged in this court, and are here and were in the court below specifically stated, viz., "as merely a conclusion, incompetent, irrelevant, immaterial, and not the best evidence, and hearsay."

It is next contended that the county commissioners failed to designate a newspaper in which to publish the delinquent tax lists for the years during which these taxes were levied. The contention is that, if there was any designation at all, it was the Fargo Republican that was designated, and that such designation was not a designation at all, as there was no newspaper in the city of Fargo at that time of that name; that there was a daily newspaper then published there as the Fargo Daily Republican, and a weekly newspaper as the Fargo Weekly Republican. It is shown in this case by the recitals of the deed that there was a publication of the delinquent tax lists for those years. The objection goes simply to the failure to designate by the county commissioners. The proof in support of this objection is the following extract from the proceedings of the county commissioners, in connection with the following certificate of the county auditor and the oral testimony of Mr. Robinson, namely: "Upon motion the contract for publishing the delinquent tax list was awarded to the Fargo Republican at four cents per description, and a bond of four hundred dollars to be furnished for the faithful performance of the contract." The certificate of the auditor attached thereto is as follows: "I * * * do hereby certify that the above is a true and correct transcript from the records of the county commissioners, so far as the same pertains to the resolutions designating a newspaper for the publication of the delinquent tax lists, * * * as the same remains of record in my office." The certificate is not in such form as to negative the existence of other matters in the proceedings of the board that pertain to the designation of a newspaper for the purpose named. What pertains to a designation of a newspaper in which to publish a delinquent tax list is a question of law, depending for its answer upon the facts proven. It is the auditor's conclusion that the above motion contains all that pertains to that question. It is not for him to determine the question. He does not certify that the portion of the record to which he certifies is a true and correct transcript of the whole motion, even. For these reasons, the copy is not comprehensive enough to negative the existence of other matters in the record. The certificate of the auditor should be confined to the correctness of copies. It is only by force of the statute that certified copies are permitted to be used, and when used they should be taken as evidence of such facts only as are authorized to be so certified. Mr. Robinson testified that he had examined the proceedings of the board of county commissioners for the years mentioned, and that the record "contains no resolution designating a newspaper for the publication of the tax lists for said years, excepting the three resolutions of which certified copies have been put in evidence." One of the exceptions is the certified copy referred to above. The records were not produced in court. The county clerk was not called as a witness. This mode of showing the absence of a part of public records has been heretofore condemned in this case, and nothing more need be said on the subject. If official acts are to be set aside, it should only be done on competent proof that such acts are not in accordance with prescribed modes. This oral testimony does not negative the fact that there was no designation of a newspaper other than by the so-called resolution testified to. The deed recites the publication of the list. The law does not declare how the newspaper shall be designated by the commissioners. It is not specified in the Code that it must be done by resolution, and that there is no designation by any other resolution than the one spoken of by the attorney is the only way that the fact that there was a designation is negatived. The records could not be of that voluminous character making their production in court burdensome, and, if shown so to be, no reason is apparent why the auditor could not have been produced to testify as to what they failed to show. As there is no showing that there was no designation of a newspaper as provided

by law, the case of Cass County v. Security Improvement Company, 7 N. D. 528, 75 N. W. 775, is not in point. This objection is overruled, because the basis of it is not shown by the evidence to exist.

It is next shown that the records of the board of county commissioners do not show that the county commissioners held sessions as a board of equalization in the years 1889 to 1895, inclusive. It is not claimed that the county commissioners did not meet and act as a board of equalization during these years. The contention is that the minutes of the board of county commissioners do not show a meeting of the board of equalization. It is conceded that the proceedings of the board of equalization were kept in a separate record, called "The Record of the Board of Equalization." In 1889 the membership of these two boards was identical. In 1891 it was not identical. The appellant relies on section 586 of the Compiled Laws of 1887 to sustain his contention on this point. Said section reads: "They shall keep a book in which the orders and decisions made by them shall be recorded, except those relating to roads and bridges." What would be the effect, had the county commissioners, acting as a board of equalization, failed to keep a separate record of their proceedings, we need not determine. In this case they met as a board of equalization, and kept minutes of their proceedings in a separate book. There was an opportunity for objecting taxpayers to be heard. We deem that sufficient and a compliance with the statute. It is the fact that there was no meeting that makes a tax void, and not possible irregularities in the method of perpetuating the record of the board's proceedings. This objection therefore has no such force as to avoid the tax levied during that year.

It is next claimed that the levies for the city of Fargo in 1889, 1891, and 1892 are void, because not based on an estimate of expenses or on a valid appropriation ordinance. This contention is based on section 922 of the Compiled Laws of 1887, which is as follows: "The city council shall at the first regular meeting in September or within ten days thereafter levy a tax for general purposes sufficient to meet the expenses of the year based upon estimates furnished by the city auditor or a committee of the city council." Counsel for appellant testified that he had examined the records of the city council, and that he found that "the records contain no estimate of expenses in connection with such tax levies, and no estimate of such expenses for any year from 1889 to 1895, inclusive, excepting such as is shown by the certified copies offered in evidence." In this case the records of the city council were not produced when the witness testified as to what they did not contain. Besides his own testimony, to substantiate this point the appellant's attorney introduced in evidence a certificate of the county auditor, certifying to the correctness of certain copies of the proceedings of the council. This certificate is to the effect that the foregoing copies are true and correct transcripts of the record "of the city council of the city of Fargo, of the appropriation ordinance, and of the city tax levy for the year 1889, and of all that pertains to such tax levy." This certificate does not wholly negative the fact that such estimate by the auditor or by a committee was not made. The estimate contemplated by the above section of the Compiled Laws is to be made by the auditor or by a committee for the enlightenment of the council as to the amount to be raised to meet the expenses for the coming fiscal year. It is not provided that such estimate shall be in writing, nor entered in the minutes of the council, nor preserved in the auditor's office. It is not provided when such estimate must be submitted, nor must it be submitted at the same meeting when the levy is made. The evidence, therefore, does not negative the fact that the council made the levy without basing it on any such estimate. This evidence pertains only to the records of the council. It does not pertain to the files of the auditor. The testimony of the attorney was incompetent, under the rule laid down in this case, but, granting its competency, it does not negative the fact that the levies were based on proper estimates. In short, there is a clear failure to show a noncompliance with this statutory provision. Shuttuck v. Smith, 6 N. D. 56, 69 N. W. 5.

It is further claimed that the tax proceedings subsequent to the levy, and the levy, are all void, for the reason that the state board of equalization levied the state tax by percentages instead of by specific amounts. This objection applies to the sale of lot 18 only, as the state levy of 1889 was made in specific amounts. Section 6, c. 100, p. 270, of the Laws of 1891, under which the levy affecting lot 18 was made, provides as follows: "The state tax shall be levied by the state board of equalization at their meeting in August of each year and the rate of such tax shall be certified by the State Auditor to each county auditor on or before the fifteenth day of September annually. * * * Such levy shall be made in a specific amount and the rate shall be determined by the state auditor." It is contended by the appellant that this provision of the law is mandatory, and imposes the duty upon the board to make the levy in specific amounts, and that the failure to do so renders the levy, and all subsequent proceedings based on the levy, void. The respondents contend that this provision is directory merely, and does not render the tax levy or subsequent proceedings void. It is a matter within legislative control to regulate the mode or method of making levies by boards or officers. The Legislature may provide for a levy by mills, percentages, or in specific amounts. The levy by percentages for the year 1890 was not, therefore, in strict

Digitized by Google

accordance with the provisions of the statute. The effect of a levy by percentages, when the law prescribed that levies should be made in specific amounts, is the question presented by this objection to the deed. That a levy made by the county commissioners by percentages renders the tax void, as well as sales and deeds based on such levy, has been held by this court. Wells County v. McHenry, 7 N. D. 246, 74 N. W. 241; Dever v. Cornwell, 10 N. D. 123, 86 N. W. 227. It is there also held that a judgment for a tax cannot be entered on such levies. It is held to be no levy at all, in the decisions cited. A levy by county commissioners by percentages, and a levy by the state board of equalization in the same way, differ in results, because not based on similar conditions. The total valuation of the property of the person taxed is not definitely known until the state board of equalization has acted. The valuation of his taxable property may be changed, either by being lowered or raised, or some of it lowered and some of it raised; and the property of different taxpayers may not be affected in the same way. The valuation basis on which the tax was to be raised was not definitely known when the levies were made by the county commissioners in July. A levy by percentages at that time might not have resulted in raising the amount necessary for current county expenses, in view of the possible changes made by the state board. No such consequences can follow a percentage levy by the state board of equalization. The amount to be raised is fixed and definite when the levy is made. The valuation of all the taxable property on which the tax is to be levied and the estimated expenses of the state are definitely known and fixed when the state board of equalization makes its annual levy. It then becomes a matter of computation to determine what the rate of taxation shall be. No detriment can follow if the amount to be raised is figured by percentages. The amount to be raised through taxation will be the same. For that reason, in case of a levy not in accordance with the statute, in which the same results are reached as if the statute had been followed, we fail to see that any injury follows to the taxpayer, and see no ground for holding that such a levy by the state board of equalization is void and a nullity. Under no view can it be held that the taxpayer suffered any injury by reason of the levy by percentages. If the injury be presumed by reason of a deviation from the method prescribed by the statute, a computation will show that such presumption is not well founded. The mere fact that the law has not been literally complied with cannot be held to render the proceedings void, when no change is thereby made in the final result of the levy. When the levy is made by the state board, the total sum to be raised by state taxation is fixed and certain. So is the total equalized valuation of all the property of the state subject to taxation fixed and certain. With these two factors certain and fixed, the determination of the rate of taxation is simply a matter of computation. In legal effect, the specific sum to be raised is certain, fixed, and specific, because easily made so. These considerations leave no doubt in our minds that the levy was not void, but valid, and not subject to the attack made upon it. The contrast between the conditions under which a levy is made in July by county commissioners and those existing when the levy is made by the state board is so great as to warrant a different conclusion as to the effect of a levy by percentages in each case. In the matter of the county levy made in July, the valuation of the property on which the tax must be raised is not then known or capable of being made known. To fix a rate by percentages under those conditions is a mere guess as to the sum that will be raised thereby. This question was before the Supreme Court of Michigan in Hubbard v. Winsor, 15 Mich. 146, and the court said: "Instead of fixing a specific sum to be raised by taxation, the board directed a percentage on the assessed value. The Legislature subsequently passed a statute designed to legalize this method of taxation, and it is claimed this statute is void. We do not perceive any illegality in the original proceedings, and do not deem it necessary to inquire into the validity of the law. The designation of a percentage on a definite sum is just as certain as if it were calculated and stated in figures, and leaves nothing to be done to make it known, except a simple computation. It would be absurd to hold a tax valid or void according as a sum of this nature is done by one or another officer from the same data. The law presumes that the rules of arithmetic are the same in all offices." This decision was made under a statute providing that the board of supervisors "shall at their annual session in October in each year ascertain and determine the amount of money to be raised by tax for county purposes * * * and also the amount of state tax required to be raised," etc. The decision is an express authority upholding a levy by percentages when the statute commands a levy in fixed sums. In Peed v. Millikan, 79 Ind. 86, the Supreme Court of Indiana said: "Taking the entire order into consideration, we incline to the opinion that it may be treated as showing a levy of fifty-two hundreths of one per cent., and that it is not void because in the shape of a per cent. instead of a gross sum. Assuming, as counsel for appellant contends, that the levy must be deemed to have been made upon or with reference to the duplicate of the preceding year, it is a percentage upon a definite and known sum or sums, and the total amount is as certain as if the aggregate had been stated in figures. 'Id certum est quod certum reddi potest.'" Both of the cases cited were equity proce-

Digitized by Google

ings to restrain the collection of taxes so levied. These cases accord with our conclusion that it would be too technical and narrow a construction to hold that a mere irregularity, not possibly affecting the result, vitiates a levy and all subsequent proceedings. We therefore hold that the levy was a valid levy, and in so doing do not overrule the previous decisions of this court pertaining to county levies. Wells County v. McHenry and Dever v. Cornwell, supra. This renders it unnecessary to consider the constitutionality of section 79, c. 126, p. 286, of the Laws of 1897, as a decision thereon could not affect this case, for the reason that the taxes are held valid and not subject to the objections urged against them.

On the first argument of this case, in September, 1902, Chief Justice Wallin was strongly of the opinion that the state levy was invalid, and wrote a dissenting opinion. The court, as now constituted, has, after an exhaustive argument upon this point on rehearing, unanimously reached the conclusion that the objection to the validity of the state tax levy cannot be sustained.

Appellant presents an affidavit, and on it bases a request that, in case of a decision adverse to the plaintiff, the cause be remanded for another trial. The request is that he be allowed to present further testimony to show that no warrant was ever attached to the tax list, and that no notice was published of the time when the right of redemption would expire. We have recently held, in Nichols v. Roberts (decided at this term) 96 N. W. 298, that matters extraneous to the record on appeal will not be considered in determining what disposition shall be made of cases appealed to this court. There was ample opportunity in the court below to have presented the testimony now sought to be presented. If such an application were ever to be viewed with favor, this one may be denied as without merit.

The judgment is affirmed. All concur.

MICHIGAN TRUST CO. et al. v. CITY OF RED CLOUD.

(Supreme Court of Nebraska. July 3, 1903.)

APPEAL—EQUITY—PRESUMPTIONS—MORTGAGE FORECLOSURE—PLEADING.

1. The usual presumptions in favor of a finding of the trial court do not obtain on appeal in an equity case.

2. A bank issued certificates of deposit, which were guarantied by its directors, and secured by trust deeds given by the guarantors and a stockholder on their individual property; the guarantors giving trust deeds to secure the payment of the certificates. A petition filed by a holder of one of the certificates for the foreclosure of the trust deed given by the stockholder alleges that the plaintiff recovered a judgment at law against the bank, and that an execution issued thereon has been returned unsatisfied. *Held*, that such allegation does not relieve the plaintiff of conforming to the requirements of section 850, Code Civ. Proc. 1901, requiring a petition for foreclosure to state whether any proceedings at law have been had for the recovery of the debt secured by the instrument sought to be foreclosed.

3. Former judgment vacated, and the decree of the district court reversed.

(Syllabus by the Court.)

Petition for rehearing granted, and judgment reversed.

For former opinion, see 92 N. W. 900.

ALBERT, C. This case is before us a second time. The former opinion is reported in 92 N. W. 900, where the facts are set forth at length.

As on the former hearing, the sufficiency of the petition is assailed on the ground, among others, that it fails to comply with sections 850 and 851 of the Code of Civil Procedure of 1901, which requires a petition for the foreclosure of a mortgage to state whether any proceedings at law have been had for the recovery of the deed secured by the mortgage sought to be foreclosed. The petition in this case deals with the trust deed as a mortgage, and the decree is an ordinary decree of foreclosure; hence the sufficiency of the petition is to be tested by the rules governing pleadings in actions brought for the foreclosure of mortgages. The sections above referred to are as follows:

"Sec. 850. Upon filing a petition for the foreclosure or satisfaction of a mortgage, the complainant shall state therein whether any proceedings have been had at law for the recovery of the debt secured thereby, or any part thereof, and whether such debt, or any part thereof, has been collected and paid.

"Sec. 851. If it appears that any judgment has been obtained in a suit at law for the money demanded by such petition, or any part thereof, no proceedings shall be had in such case, unless, to an execution against such property of the defendant in such judgment, the sheriff or other proper officer shall have returned that the execution is unsatisfied in whole or in part, and that the defendant has no property whereof to satisfy such execution except the mortgaged premises."

The petition is wholly silent as to some of the matters mentioned in the sections just quoted. It does, however, allege the recovery of a judgment against the banking company on the indebtedness sought to be enforced in this action, and the return unsatisfied of an execution issued thereon. In the former opinion it was held that such allegation was a sufficient compliance with such sections. A re-examination of the question satisfies us that our former conclusion on that question is wrong. The banking company was the principal debtor, and four of the grantors under the trust deeds guarantors on the certificates. The plaintiff had a remedy at law, not only against the principal debtor, but against the grantors. It also had its remedy in equity against the trust property. The object of section 850 is to prevent a creditor from pursuing its remedy at law and in equity concurrently. Hargreaves v. Menken,

Digitized by Google

45 Neb. 668, 63 N. W. 951. Hence the allegation showing the extent to which the plaintiff had pursued its remedy at law against the principal debtor falls far short of showing that when this action was brought the plaintiff was not proceeding by concurrent actions at law against the guarantors of the certificates secured by the trust deed sought to be foreclosed in this action. For that reason, the petition fails to comply with the requirements of that section. That a petition for the foreclosure of a mortgage which fails to comply with such requirements is insufficient to support the decree is settled by numerous authorities, among which are the following: Jones v. Burtis, 57 Neb. 604, 78 N. W. 261; Kirby v. Shrader, 58 Neb. 316, 78 N. W. 616; Miller v. Nicodemus, 58 Neb. 352, 78 N. W. 618.

2. But there is another question in this case which goes more to the merits of the controversy, and that is whether the written directions prescribing the order in which the trust property was to be sold, and which accompanied the trust deeds at the time of their delivery, are binding on the beneficiaries, because, if they are, it necessarily follows that the property of the banking company and of the resident stockholders should be exhausted before the plaintiff in this case should be permitted to resort to that covered by the trust deed sought to be enforced. On the former hearing we resolved this question against the appellant, on the ground that there was sufficient evidence to support a finding that such directions were merely the result of an agreement between the grantors, to which the beneficiaries were not parties. The evidence which we held sufficient to that end is set out in the former opinion. An examination of it will disclose that, so far as it touches the precise question before us, it is more in the nature of a conclusion or an opinion of the witness as to the legal effect of the transaction than of what actually occurred. Besides, its force is somewhat weakened by some inaccuracies in the testimony of the witness, taken as a whole, which go to show that his recollection of the transaction is not entirely clear. For example, he testifies that the trust deeds were all alike, and in no manner different as to their terms and conditions. The record discloses a substantial difference between the trust deed involved in this case and those given by the other grantors. Again, he testifies that the grantor under this deed was a director as well as a stockholder of the banking company. Such is not the case. He was merely a stockholder. Standing opposed to this testimony of that witness is that of two other witnesses to the effect that the written directions accompanied the trust deeds at the time of their delivery in escrow, and as part of the same transaction. One of these witnesses was the mayor of the defendant city at the time, and the custodian selected to hold the deeds in escrow. The testimony on this point is all in the form of depositions, so that the trial court was in no better position to weigh it accurately than this court. That being true, and the case being here for trial de novo, we cannot give full force to the usual presumptions indulged in favor of the findings of a trial court on conflicting evidence. Gibson v. Hammang (Neb.) 88 N. W. 500. While the testimony of none of the witnesses on this point is entirely clear as to all the details, it conclusively shows that the written directions as to the order in which this property was to be sold were delivered to the custodian, mayor of the defendant city, with the trust deeds, and as part of the same transaction, to be delivered to the trustee. The fact, standing alone and without explanation, would show, prima facie, that such transaction entered into was a part of the contract, and that all prior negotiations between the parties had been included in the written documents, namely, the trust deeds and the written directions, which the parties had settled upon as containing the final propositions to which they had given their assent. Whatever may have been the prior negotiations of the parties, it is the written contract, actually delivered, which the plaintiff seeks to enforce in this action, and it must accept it as an entirety or not at all. Assuming, then, that the plaintiff should be permitted to show by parol testimony that it was not intended that the written directions accompanying the deeds were to be binding on it and the other beneficiaries, it should be required to establish that proposition by a preponderance of the evidence. This, in our opinion, it has failed to do. On the contrary, the evidence on that question preponderates in favor of the appellant. We are forced to the conclusion, therefore, that the written directions for the sale of the property in the order therein prescribed were a part of the contract whereby the trust was created. The legal effect, then, of the power of sale contained in the trust deed in question, taken in connection with those directions, is that the trustee is authorized to sell so much of the property therein described as may be necessary to discharge the indebtedness secured thereby and remaining unpaid after the proceeds of the sale of the other trust property have been exhausted. It is only after such other property has been exhausted that resort may be had to the property in controversy. That such other property has not been exhausted is conclusively established by the evidence. It follows, therefore, that the decree of the district court cannot be sustained.

3. In view of the recommendation we intend to make in this case, it is proper at this time to notice another feature of the trust deed sought to be foreclosed. The power of sale authorizes the trustee to sell so much of the property, not exceeding $10,000 worth, as may be necessary to pay the amount due on the certificates. Then follows a provi-

Digitized by Google

sion to the effect that the grantor shall be entitled to a reconveyance of the property from the trustee upon the payment or deposit by the grantor of $10,000, "or so much thereof as may be necessary to pay his pro rata share of the amount due on the debt secured." It is contended that, as there were five parties who gave security for the payment of the certificates, the pro rata share of the appellant's testator would be one-fifth. We do not consider that a proper construction of the contract, taken in its entirety. The certificates were not guarantied by the testator, and he was not a party to the contract of guaranty indorsed on them. He merely pledged his property, to the extent of $10,000 worth, for their payment. Hence, aside from such liability as might arise from his being a stockholder, the certificates imposed upon him no personal liability. From the transaction, taken as a whole, we think it is clear that by the use of the phrase "his pro rata share" the parties did not intend to convey the idea that he was to share equally with the guarantors in the payment of the debt. The true construction of the provisions of the trust deed under consideration, we think, is that the property conveyed, to the extent of $10,000 worth, should stand as security for the debt, and that the grantor should be entitled to redeem at any time, by the payment of that sum to the trustee, or such sum as would bear the same relation to the debt remaining unpaid at the time of redemption as $10,000 bore to the original amount of the debt. It seems to us this is the only construction that is consistent with the rest of the contract.

The conclusion reached on the second proposition discussed in this opinion is not only fatal to the decree of the trial court, but is an insuperable obstacle to a recovery in this action, in the form it is brought. But we do not think the suit should be dismissed. A part of the trust property is before the court, and there is no trustee. We think the plaintiff should be permitted to reform its pleadings, and bring in the necessary parties to enable the district court to enforce the trust according to its terms.

It is therefore recommended that the judgment heretofore entered by this court be vacated, and that the decree of the district court be reversed, and the cause remanded for further proceedings.

PER CURIAM. For the reasons stated in the foregoing opinion, it is ordered that the judgment heretofore rendered by this court be vacated, and that the decree of the district court be reversed, and the cause remanded for further proceedings.

SULLIVAN, C. J. (concurring specially). I agree entirely with the reasoning and conclusion of the Commissioner, but think there ought, perhaps, to be some slight elaboration of the views expressed upon one point.

The petition must state whether any proceedings have been had at law for the collection of the debt secured by the mortgage, and whether any part of such debt has been paid. The provision was for the benefit of the debtor. It was intended to change the former practice, which permitted actions at law and suits in equity to be prosecuted concurrently. The practice was burdensome to the debtor, and the new procedure was designed to relieve him of the needless expense which it involved. Dimick v. Grand Island Banking Co., 37 Neb. 394, 55 N. W. 1066. The debtor must, in the end, reimburse his surety. He must not only pay the debt, but also the costs made in collecting it by the foreclosure of a mortgage upon the surety's property. If, therefore, the plaintiff may proceed at law against the principal debtor or some of his sureties, and in equity at the same time against other sureties, it seems clear that he is denied the benefit which it was the purpose of the statute to confer upon him. Practically, there is no difference between concurrent actions against the principal debtor and concurrent actions against his sureties. In either case the unnecessary expense falls upon him.

DUNN et al. v. THOMAS.

(Supreme Court of Nebraska. July 3, 1903.)

RIPARIAN OWNERS—PRESCRIPTIVE RIGHTS—MAINTAINING DITCH.

1. A lower riparian owner obtains no right to receive the water of a stream, as against an upper owner, by user for the statutory period of prescription.

2. In order to acquire an easement by prescription, the adverse user must not only be continuous in point of time, but also substantially identical, during the whole of the statutory period, with respect to manner and extent.

3. One who seeks to acquire an easement of maintaining a ditch over another's land by adverse user must maintain it, without material change of location, for the full statutory period. That he may have had a ditch somewhere upon the land for 10 years does not give him a right to maintain it in a new location, or to use an extension thereof made within the period.

(Syllabus by the Court.)

Commissioners' Opinion. Department No. 3. Appeal from District Court, Sioux County; Westover, Judge.

Action by Joseph F. Dunn and others against Samuel M. Thomas. Judgment for defendant, and plaintiffs appeal. Affirmed.

Allen G. Fisher, for appellants. W. H. Fanning, for appellee.

POUND, C. Plaintiffs sue to enjoin the defendant from interfering with or preventing their cleaning out and operating an irrigation ditch which they claim a right to maintain over and across the defendant's land. They also pray an injunction to restrain the defendant from in any manner diminishing the flow of water in the ditch.

Digitized by Google

The trial court dismissed the cause, and plaintiffs appeal.

The claim to relief against diminishing the flow of water in the ditch appears to be directed against certain ditches maintained by the defendant, who is an upper riparian owner, on his own land, and to be based on the assumption that plaintiffs, who are lower owners, have acquired a right to receive the water of the stream in question for use in their ditch by 10 years' user. Of course, this claim is without any legal basis, and was properly rejected by the district court. Crawford Co. v. Hathaway (Neb.) 93 N. W. 781. As to the plaintiffs' ditch, it appears very clearly that a ditch was run upon defendant's land in November, 1890, and that plaintiffs have taken water at a point on said land ever since. But one of their principal witnesses testifies that in 1899, two years prior to this suit, the ditch was run some distance higher up on defendant's land; and the latter claims that this extension injures his land, and that his objections and the interference and obstructions sought to be restrained are directed against the new location and extension. This does not seem to be seriously disputed. In order to acquire an easement by prescription, the adverse user must not only be continuous in point of time, but also substantially identical, during the whole statutory period, with respect to manner and extent. American Bank Note Co. v. New York E. R. Co., 129 N. Y. 252, 29 N. E. 302; Cotton v. Pocasset Mfg. Co., 13 Metc. 429. In consequence, one who seeks to acquire an easement of maintaining a ditch over another's land by adverse user must maintain it, without material change of location, for the full statutory period. Cotton v. Pocasset Mfg. Co., supra. That plaintiffs may have had a ditch somewhere upon the land for 10 years does not give them a right to maintain it in a new location, or to use an extension thereof made within that period.

We therefore recommend that the decree be affirmed.

DUFFIE and KIRKPATRICK, CC., concur.

PER CURIAM. For the reasons stated in the foregoing opinion, the judgment of the district court is affirmed.

FOKENGA v. CHURCHILL.

(Supreme Court of Nebraska. Jan. 8, 1902.)

HIGHWAYS—CULVERTS—AUTHORITY OF COUNTY BOARD—INJUNCTION.

1. On the facts stated, *held*, that the county board had authority to direct the road overseer to place a culvert across a highway in his district.

2. It is not necessary in such order to designate the specific point on the highway at which such culvert is to be placed.

3. In an action to enjoin the construction of such culvert, the question is not whether it would divert the surface drainage from its natural course to the plaintiff's injury, and, if so, whether it was the best and most advantageous means of disposing of such water, but whether such culvert was reasonably necessary to a proper maintenance of the road.

Commissioners' Opinion. Department No. 3. Appeal from District Court, Johnson County; Letton, Judge.

"Not to be officially reported."

Action by Wilm J. Fokenga against Thomas Churchill. Judgment for defendant, and plaintiff appeals. Affirmed.

M. B. C. True, for appellant. L. C. Chapman and Hugh LaMaster, for appellee.

ALBERT, C. The appellant brought this action against the appellee, the overseer of highways of a certain road district, to enjoin the placing of a culvert across a highway adjoining the plaintiff's land. The petition alleges, in substance, that the defendant is the acting overseer of road district No. 14 of Johnson county, and that the plaintiff is a freeholder of said county, and is the owner of the N. ½ of the N. W. ¼ of section 4, township 5, range 9 west; that a duly laid out highway extends along the section line running between said section and section 4 within said road district; that the northern and larger portion of the north half of said section 5 slopes to the east towards the said land of the plaintiff; that during and after heavy rainfalls a large amount of water rushes down the eastern slope of the northeast quarter of section 5 towards the lands of the plaintiff; that the said road district has heretofore dug a ditch along the western side of said road, which is sufficient, if kept clear of obstructions, to take all the water that may fall upon said northeast quarter of section 5 and adjoining land toward Hooker creek on the south, except a small amount that may fall to the north towards the south fork of the Great Nemeha river; that said ditch terminates near the southwest corner of plaintiff's land, and can be extended further south so that it will discharge its entire flow of water into Hooker creek without any damage to any lands along said road; that the defendant has threatened to put a culvert across said road between the southern half of plaintiff's land and section 5, through which, if made, the waters from the northern half of said section 5 will flow upon the lands of this plaintiff on section 4, and greatly damage said lands; that the place where the defendant threatens to put said culvert is not the natural waterway nor the place where the water would naturally flow; that said culvert is unnecessary; that there is a natural waterway across said road, near the southwestern corner of plaintiff's land, where such culvert may be placed advantageously; and that the defendant's threats, if carried into effect, would result in great and irreparable dam-

Digitized by Google

age, for which the plaintiff has no adequate remedy at law.

The defendant answered, admitting that he was threatening to place the culvert across the road as charged in the petition, but averred that he was acting by virtue of an order of the county commissioners, as follows: "* * * Emil Kopelin, overseer of highways in road district No. 14, is hereby directed to put in two culverts on the section line between the northeast quarter of section 5, range 9, Johnson county, Nebraska, the same being the section line and road involved in the action of Churchill v. Henry Beethe et al. The clerk is directed to give said overseer orders to carry this order into effect." The answer also contains a general denial of all allegations in the petition not admitted. The court found for the defendant, and entered a decree accordingly.

The appellant contends that the order of the county commissioners is insufficient to justify the defendant in constructing the proposed culvert, for the reason it does not designate the location with sufficient certainty, and for the further reason that the overseer alone should determine the location of culverts. Section 1, c. 78, Comp. St. 1901, reads: "The county board has a general supervision over the public roads of the county, with power to establish and maintain them as herein provided, and to see that the laws in relation to them are carried into effect." Section 76 of the same chapter, so far as is material at present, is as follows: "In counties not under township organization the road tax shall be paid in cash. One-half of all moneys paid into the county treasury from the several road districts in discharge of road tax shall constitute a county road fund which shall be divided equally between the commissioner districts and shall be at the disposal of the county commissioner in his district for the general benefit of the county roads therein; provided that the other one-half of all moneys so paid into the county treasury from the several road districts, in discharge of road tax, and all cash labor tax shall constitute a district road fund, and shall be expended by the county commissioners in the road district from which it was collected, for the following purposes: First—for the construction and repair of bridges and culverts, and making the fire guards along the line of roads. Second—for the payment of damages of the right of any public road. Third—For the payment of wages of overseers, and for the expense of procuring the necessary tools. Fourth—For the payment of wages of commissioners of roads, surveyor, chainman, and other persons engaged in locating or altering any county road, if the road be finally established or altered as hereinbefore provided. Fifth—For work and repairs on roads. * * *"

From the sections just quoted we think it clear that the county board may direct the overseer to make improvements in the highways of his district, including the construc tion of culverts. As to the details, we ar equally clear that much may be and should b left to the discretion of the overseer. He i supposed to be on the ground, and familia with the roads in his district, and their co dition and needs. The precise place at whic a culvert shall be placed is purely a matte of detail, and the failure of the county boar to designate it does not invalidate the orde Were it proposed to construct a culvert u der contract in pursuance of the provisio of section 83 of the same chapter, a differe question might arise.

The appellant's theory of this case, gathered from the pleadings and the evidenc is that the proposed culvert will divert t surface water, to his injury, and that su culvert is not the best means of disposing such water, and is unnecessary. Consider ble evidence was received in support of th theory. On the other hand, several witness produced by the defendant testified, in e fect, that before the road was graded su water was largely, if not wholly, carried through a ditch of swale extending acro the road, at the proposed location of the c vert, and to other facts tending to show th the construction of the culvert at that pla was reasonably necessary and proper the maintenance of the highway. Hen even should we adopt appellant's theory the case, the rule that the finding of the tri court on conflicting evidence will not be d turbed stands as an insuperable barrier the relief sought by this appeal.

Besides, the question before the trial cou was not whether the proposed culvert wou divert the surface drainage from its natu course to appellant's injury, and, if whether it was the best and most advanta ous means of disposing of such water, b whether such culvert was reasonably nece sary to a proper maintenance of the ro Churchill v. Beethe, 48 Neb. 87, 66 N. 992, 35 L. R. A. 442. On that point the fi ing of the trial court is abundantly sustain by the evidence.

The law in regard to surface water discussed at some length in the briefs. O failure to go into that subject at great length arises from no lack of interest, b from the belief that what has already be said disposes of the case.

We recommend that the decree of the d trict court be affirmed.

AMES and DUFFIE, CC., concur.

Affirmed.

HART v. DEITRICH.

(Supreme Court of Nebraska. July 3, 1903

PARTNERSHIP—ACCOUNTING.

1. A partner who, without notice to or know ledge of his copartner, takes substantially all

the ready money of the firm, and absconds, remaining away eight months without disclosing his whereabouts, has no standing in equity to demand an accounting after his copartner has wound up the business and paid the partnership debts.

(Syllabus by the Court.)

Commissioners' Opinion. Department No. 3. Appeal from District Court, Box Butte County; Westover, Judge.

Action by Nathan Hart against G. H. Deitrich. Judgment for plaintiff. Defendant appeals. Reversed.

R. C. Noleman, for appellant. William Mitchell, for appellee.

POUND, C. This is a suit for accounting. The parties were partners in the saloon business at Alliance; the plaintiff residing at that point, while defendant lived at Crawford, some 58 miles distant. On July 8, 1895, plaintiff, without notice to or knowledge of his partner, and without warning to the employés in immediate charge of the business, drew out substantially all the firm moneys in the bank, took the cash on hand in the saloon, and absconded. Where he went, or for what purpose, he does not inform us. But he was gone some eight months, during which time he did not communicate with his partner or with his family; nor was any one able to ascertain what had become of him. The defendant, who seems to have been the responsible member of the firm, closed out the partnership business and paid its debts. Afterwards plaintiff sued for an accounting. The referee, who heard the evidence, found for the defendant; but the court sustained exceptions to the report, and entered a decree for the plaintiff, which is now appealed from.

Without going into the somewhat complicated details of the accounting, we are of opinion that the decree ought not to be suffered to stand. Whether or not the purchase, earnings, and disposition of a roulette wheel are proper subjects for a court of equity, a partner who, in times of financial stress, such as prevailed in 1895, absconds with the ready money of the firm, and leaves his copartner to settle the business as best he can, has no standing in a court of equity to demand an accounting, when it turns out that the business was closed up successfully. Defendant was on the spot to meet the claims of creditors. He was compelled to see that they were paid. If the partnership property did not suffice, he was liable. The plaintiff ran no risk. If a deficit resulted, he had only to stay away. If the property paid the debts, he could turn up and call for an accounting. Unless the maxim that he who comes into equity must come with clean hands has lost all virtue, the plaintiff's case has no place in a court of equity, and should be dismissed.

It is recommended, therefore, that the decree be reversed and the case dismissed.

DUFFIE and KIRKPATRICK, CC., concur.

PER CURIAM. For the reasons stated in the foregoing opinion, the judgment of the district court is reversed, and the action is dismissed.

CHICAGO, R. I. & P. RY. CO. v. COLBY.

(Supreme Court of Nebraska. July 3, 1903.)

CARRIERS—FREIGHT SHIPMENTS—REGULATION.

1. A railroad company, as a common carrier, may make reasonable rules and regulations for the reception, carriage, and delivery of freights, including the classification and suitable preparation of articles for shipment; and such rules and regulations, shippers are to conform to.

2. The reasonableness of such rules, regulations, and classification is a question of law for the court, and it is reversible error to submit that question to the jury.

(Syllabus by the Court.)

Commissioners' Opinion. Department No. 2. Error to District Court, Gage County; Letton, Judge.

Action by David R. Colby against the Chicago, Rock Island & Pacific Railway Company. Judgment for plaintiff. Defendant brings error. Reversed.

W. F. Evans and Hazlett & Jack, for plaintiff in error. L. W. Colby, for defendant in error.

BARNES, C. In this action D. R. Colby, the defendant in error, sought to recover the possession of a certain wagon, described in his petition, from the Chicago, Rock Island & Pacific Railway Company. Such proceedings were had that the case finally reached the district court of Gage county, where, on a trial to a jury, a verdict was returned in his favor for the possession of the property, and for the sum of $13.80 damages. Judgment was rendered on the verdict, and the railway company prosecuted error.

It appears that one F. A. Matthis delivered a peddler's wagon to the Chicago & Great Western Railway Company at Pearl City, Ill., to be shipped to the defendant in error, at Beatrice, Neb.; that it was transported by the initial carrier as far as its line of road extended, and was there delivered to the plaintiff in error, and was carried by it to the place of destination; that when the defendant called for the wagon a dispute arose over the freight charges. The amount claimed by the plaintiff was $13.80, while the defendant insisted that he should be required to pay the sum of $6.62 only. Efforts were made to adjust the matter in dispute, which were unsuccessful, and thereupon the defendant replevied the wagon, alleging that he had tendered the plaintiff an amount sufficient to pay the proper freight charges. The record discloses that he introduced some evidence tending to show that he had made an inquiry of some one in charge

Digitized by Google

of the plaintiff's office in Beatrice to ascertain the probable cost of transporting the wagon from Pearl City, Ill., to that place, and had been told that it would be about $6.62; that thereupon he wrote to Matthis to ship it to him. It appears that when the wagon was delivered by Matthis, at the Great Western Railway Company, it was not crated or prepared for shipment in the manner required by the company's rules, and therefore the charge for its transportation was greater than the rate contended for by the defendant. No rate was fixed by the contract of shipment, and, when the plaintiff's freight inspector saw the wagon and ascertained its condition, he fixed the rate thereon which is provided for by what is called the "Western Classification," and which it appears applied to all roads west of the Mississippi river, the plaintiff included, and directed the agent of the road at Beatrice to collect that rate from the defendant. It also appears from the evidence that if the wagon had been crated according to the regulations set forth in the "Western Classification" of freights, which classification, together with the rates prescribed thereby, appears to have been posted in the depots of all of said roads, the cost of the shipment would have been $6.62, but for lack of proper crating the rate was $13.80, the amount claimed by the plaintiff. There is no conflict of evidence on these questions. The plaintiff claimed the right to hold the property until its lien for the freight charges was paid, while the defendant demanded its delivery on the payment of the lesser rate. This was the real question in dispute, and on the trial the court submitted the question of the reasonableness of the regulations, classification, and freight charges to the jury, by the following instructions: "(2) You are instructed that every common carrier in this state is entitled to a lien upon the property transported by it for the proper and reasonable freight charges thereupon, and that, unless you believe from the evidence that the plaintiff has tendered to the defendant the reasonable and proper freight charges for the shipment of said goods, the defendant will be entitled to a verdict at your hands. If, on the other hand, you find that the amount which was tendered to the defendant is the reasonable, proper, and usual freight charges, under the rules and regulations which have been introduced in evidence before you, adopted by various railway companies adopting such classifications, and that such regulations are fair and reasonable, then you should find for the plaintiff. (3) You are instructed that it is competent for companies engaged in the business of common carriers to adopt rules of classification and tariffs of freight charges for the carriage of goods, and that, if said classifications and tariffs are fair and reasonable, they are lawful and proper, and must be recognized by persons transacting business with such common carriers. And in this case if you believe from the evidenc that such regulations are fair and reaso able, and that the goods in controversy wer by the terms and conditions of the 'Wester Classification,' which has been introduced i evidence, entitled to be shipped at one an one-half times the first-class rate, at actu weights, then you should find for the plai tiff. But if, on the other hand, you find th the goods in controversy were, under th rules of the 'Western Classification,' entitle to be rated as first-class, minimum weig fifteen hundred pounds, then you should fi for the defendant." That a common carri has a lien for its proper freight charges o the property transported over its lines o road, and may hold possession of such pro erty until its lien is paid, is the settled la of this state. It is equally well settled th on tendering the amount of freight charg actually due the carrier, the owner may r plevy his goods, and it is unnecessary t again refer to these questions.

The plaintiff's first contention is that t court erred in giving the instructions abo quoted. A common carrier may make re sonable rules as to the reception, carriag and delivery of freights. Such rules a regulations shippers are to conform t Their reasonableness is a question of law f the court to decide. Rorer on Railroads, 22 Illinois Cent. R. Co. v. Whittemore, 43 I 420, 92 Am. Dec. 138; Vedder v. Fellows, N. Y. 126; Tracy v. N. Y. & Harlem R. C 9 Bosw. 396. In Illinois Cent. R. Co. Whittemore, supra, the court said: "The c cuit court left it to the jury to say wheth the rule was reasonable. This was error. was proper to admit testimony as was do but, either with or without this testimony, was for the court to say whether the regul tion was reasonable, and therefore obligato upon the passengers. The necessity of ho ing this to be a question of law, and the fore within the province of the court to s tle, is apparent from the consideration th it is only by so holding that fixed and p manent regulations can be established. this question is to be left to juries, one r would be applied by them to-day, and a other to-morrow. In one trial a railw company would be held liable, and in a other, presenting the same question, not l ble. Neither the companies nor the passe gers would know their rights or their oblig tions. A fixed system for the control of t vast interests connected with the railwa would be impossible, while such a system essential equally to the roads and to t public." In the case at bar there was conflict of evidence on the question as what the regulations were which had be fixed by the "Western Classification" as the manner of preparing the wagon in qu tion for shipment. Neither was there a dispute as to the rate fixed for its transpor tion when prepared for shipment accordi to said rules and regulations. Therefore

Digitized by Google

was the duty of the court to determine, as a matter of law, whether the regulations contained in the classification, which was introduced in evidence, were reasonable or not, and whether the sum charged for transportation thereunder was the proper amount. If these questions are left to the determination of juries, freight rates will soon reach a condition of chaos. What one jury might think was reasonable and just, another jury might reject. And so it would soon be impossible for common carriers to conduct their business with any degree of fairness or uniformity towards their patrons. Again, it is well known and understood that railroad companies act only through their agents; that it is necessary for them to adopt rules and regulations for the guidance of such agents; and it is generally understood that persons dealing with such corporations are to be governed by these rules and regulations, if fair and reasonable. It therefore becomes necessary for the courts, as a matter of law, to determine the question of the reasonableness thereof in case of a disagreement between the railroads and their patrons, because such rules are a part of the contract. For these reasons, we hold that the court erred in giving the instructions complained of.

We deem it unnecessary to consider any of the other assignments of error. For the giving of the instructions above quoted, we recommend that the judgment of the district court be reversed, and the cause remanded for a new trial.

ALBERT and GLANVILLE, CC., concur.

PER CURIAM. For the reasons stated in the foregoing opinion, the judgment of the district court is reversed, and the cause remanded for a new trial.

M. RUMLEY CO. v. JELSMAN et al.

(Supreme Court of Nebraska. Jan. 8, 1902.)

CHATTEL MORTGAGE—POSSESSION OF PROPERTY—ACTION BY MORTGAGEE—EVIDENCE.

1. Evidence examined, and *held* in part to sustain the verdict and judgment.

Commissioners' Opinion. Department No. 1. Error to District Court, Gage County; Stull, Judge.

"Not to be officially reported."

Action by M. Rumley Company against John Jelsman and others. Judgment for defendants, and plaintiff brings error. Modified.

Frank J. Kelley, for plaintiff in error. Griggs, Rinaker & Bibb and L. C. Burr, for defendants in error.

DAY, C. On July 1, 1898, M. Rumley Company brought this action in the district court of Gage County against John Jelsman et al. to recover the possession of certain personal property, consisting of a 12-horse power traction, a separator and wagon, a straw stacker and other fixtures belonging thereto, all of which were particularly described in the petition and affidavit. The plaintiff claimed the right of the immediate possession of the property by virtue of a chattel mortgage held by it, the conditions of which with reference to certain payments the plaintiff alleged had been broken. The answer was a general denial. The property was delivered to the plaintiff under the writ of replevin, and by it converted into money.

Upon the trial the jury found that the right of property and the right of possession of the property described in the petition was in the defendants, and found the value of the property to be $1,875, and assessed the defendants' damages for the unlawful detention of the property at $1,000. The motion for a new trial was overruled, and judgment entered on the verdict, to review which the plaintiff brings error to this court.

The principal error complained of by the plaintiff upon the argument was that the verdict and judgment are not supported by sufficient evidence. The mortgage was given to secure a number of notes maturing at different times, two of which appeared upon the face of the instrument to be due at the time of the bringing of the suit. One of the notes by its terms matured November 1, 1897, and the other December 1, 1897. It was contended by the defendants that the time of payment of all the notes had been extended one year from the date of their maturity. The evidence tended to show that in August, 1897, the plaintiff became alarmed upon some information it had received that the property was about to be removed from the state, and took possession of the property, and moved it some miles from where the defendants were at the time using it. The difficulty was adjusted between the parties a few days later, and the property returned to the defendants. The defendants claim that at this time, in consideration of their waiving damages sustained by being deprived of the use of the property, it was agreed between plaintiff and defendants that the time for payment on all of the notes be extended one year from the date of their maturity, but that meanwhile the defendants would pay such sums on the notes as they could spare.

Upon the question as to whether there had been an extension of the time of payment there was a direct conflict in the evidence. If the time of payment had been extended, then there was no breach of the condition of the mortgage. In finding for the defendants, the jury must necessarily have found that the time had been extended. There was sufficient evidence, we think, to support this finding, and under the well-established rules of this court the finding of the jury will not be disturbed.

The jury also found the value of the property taken to be $1,875. Upon this question there was likewise a conflict in the evidence, the defendants' two witnesses placed the

Digitized by Google

value at $1,875, while the plaintiffs' witness placed it at $1,000. There was ample testimony to support this finding of the jury.

For the wrongful detention of the property by the plaintiff the jury awarded defendants $1,000. This was based upon evidence of the defendants that by being deprived of the machine they had lost certain profits which they otherwise would have made. There was no statement of facts from which the jury was warranted in finding that defendants' damages for detaining the property was $1,000. The defendants were permitted to show that during the season of 1897 the profits from running the machine were $500, and that more wheat was grown in the state in 1898 than in the previous year. They had no contracts for work for the season of 1898 which could be enforced, and but few promises of jobs. The profits for the season of 1898, under the facts shown, were too remote and speculative to form the basis for estimating damages. While it may be true, as contended for by the defendants, that the profits which would have accrued to the defendants during the season of 1898 constitute the defendants' damages for the wrongful detention of the property, yet in order to make the profits a basis for the damages it must be shown that the profits would reasonably and naturally follow from certain facts proved. The law will not permit the jury to go into the realms of conjecture and award damages without proof of facts from which such damages might reasonably be expected to follow.

That portion of the verdict awarding the defendants $1,000 for the wrongful detention of the property is not sustained by any competent evidence. We therefore recommend that unless the defendants within 20 days from the filing of this opinion file a remittitur of $1,000, with interest thereon from the date of the judgment, the judgment be reversed.

HASTINGS and KIRKPATRICK, CC., concur.

Remittitur.

BOLTON v. NEBRASKA CHICORY CO.

(Supreme Court of Nebraska. July 3, 1903.)

MANUFACTURING CORPORATION.

1. A corporation organized to "plant, harvest, store, purchase, manufacture, market, sell, and deal in chicory," *held* a manufacturing corporation, within the purview of section 37, c. 16, p. 380, Comp. St. 1901.

(Syllabus by the Court.)

Commissioners' Opinion. Department No. 3. Error to District Court, Colfax County; Hollenbeck, Judge.

Action by the Nebraska Chicory Company against Henry Bolton. Judgment for plaintiff, and defendant brings error. Affirmed.

George H. Thomas, for plaintiff in error. Everitt & Wertz, for defendant in error.

POUND, C. This is a suit upon a subscription to stock, and the sole question involved is whether the plaintiff corporation is a manufacturing corporation, within the purview of section 37, c. 16, p. 380, Comp. St. 1901. A question of this sort is not to be settled entirely by the construction given to the phrase "manufacturing corporation" in statutes of other states dealing with different subjects. The intention of the Legislature in this particular case is to be sought for, and the policy and purpose of this particular act to be considered. The decisions in which this phrase has been construed are fully collected in a recent work, and need not be set out. 1 Clark & Marshall, Private Corporations, 78, 131. It will be observed that in some cases the statute exempted manufacturing corporations from taxation, in which case it was important to prevent fraud upon the revenue laws by attaching a nominal manufacturing business to a substantial industry of another sort. In other cases, manufacturing corporations were relieved from the operation of statutory provisions as to stockholders' liability. Here, again, fraud was to be guarded against, since creditors might be prejudiced greatly if one of their statutory protections could be cut off by a mere addition of some manufacturing enterprise to an undertaking essentially of a different character. The statute here in question was obviously designed to encourage the promotion of manufacturing enterprises of all kinds, in the widest sense, by relaxing the rules as to organization. There is every reason for giving it a liberal construction, and no fraud can result from so doing. Looking at the case in this way, we are satisfied that the plaintiff corporation comes fairly within the statute. The articles of incorporation state its purpose thus: "To plant, cultivate, harvest, store, purchase, manufacture, market, sell, and deal in chicory." It appears very clearly that the cultivation, harvesting, and storing were incidental to and in aid of the main project of maintaining a plant for converting the raw product into marketable form. It is shown that, to render chicory marketable, a certain process is necessary, extending over several days, and requiring machinery and a considerable plant. The corporation actually put up such a plant, and operated it. As described in evidence, the process involved the use of molasses, as well as the chicory root, and required from three days to as many weeks, depending upon the kind and grade produced. It involved roasting, crushing, grinding, and separating, and, as to certain forms, a process of making into "sticks." This preparation of the product for market was evidently the real purpose in view. The other purposes are mentioned only so as to enable the company to procure the raw material necessary to the operation of its mill. They do not suffice to take the case out of the statute.

We recommend that the decree be affirmed.

Digitized by Google

DUFFIE and KIRKPATRICK, CC., concur.

PER CURIAM. For the reasons stated in the foregoing opinion, the judgment of the district court is affirmed.

LEAMAN v. ATKINSON et al.

(Supreme Court of Nebraska. Dec. 18, 1901.)

APPEAL—REVIEW.

1. When the defendant in an action to foreclose a tax lien files no pleading in the district court, except a motion to strike plaintiff's petition from the files, the action of the trial court in overruling such motion cannot be reviewed on appeal.

Commissioners' Opinion. Department No. 2. Appeal from District Court, Sarpy County; Keysor, Judge.

"Not to be officially reported."

Action by A. J. Leaman against A. Atkinson and others. Judgment for plaintiff, and Elijah B. Nicholson appeals. Affirmed.

H. Z. Wedgwood and A. E. Langdon, for appellant. C. L. Hover, for appellee.

OLDHAM, C. This was an action to foreclose certain tax liens. There were a number of defendants to the action in the court below. There was judgment for the plaintiff, and but one of the defendants, Elijah B. Nicholson, has brought the case here for review on appeal. The only pleading filed by appellant, Nicholson, in the court below, was a motion to strike plaintiff's amended petition from the files. This motion was overruled, and the appellant filed no further pleading. This record, then, brings no issue before us which was tendered in the trial court that can be reviewed on appeal; the petition showing on its face a good cause of action. We therefore recommend that the judgment of the district court be affirmed.

POUND and SEDGWICK, CC., concur.

Affirmed.

ANDERSON et al. v. STATE.

(Supreme Court of Nebraska. July 3, 1903.)

MUNICIPAL CORPORATIONS — ORDINANCES — POLICE REGULATION—VALIDITY—CIRCULATION OF DODGERS.

1. When a municipal corporation is expressly authorized by legislation to enact a certain ordinance in execution of the police power, such ordinance stands on the same basis as a statute, and its reasonableness or unreasonableness is not a matter for the courts, except as such question would bear on the constitutionality of a statute of the same nature.

2. A police regulation, obviously intended as such, and not operating unreasonably beyond the occasions of its enactment, is not invalid because it may affect incidentally the exercise of some right guarantied by the Constitution.

3. An ordinance making it unlawful to circulate or distribute printed or written dodgers, handbills, or circulars upon the public streets, alleys, sidewalks, or public grounds of the municipality does not contravene section 5. art. 1, of the state Constitution.

(Syllabus by the Court.)

Commissioners' Opinion. Department No. 3. Error to District Court, Douglas County; Estelle, Judge.

Sid Anderson and another were convicted of violating a city ordinance, and bring error. Affirmed.

John O. Yeiser and Charles B. Prichard, for plaintiffs in error. Gaines, Kelby, Storey, & Martin, for the State.

POUND, C. Section 50, c. 12a, Comp. St. 1901, governing cities of the metropolitan class, provides, among other things, that the mayor and council may by ordinance regulate and prohibit "the distribution or posting of advertisements or handbills in the streets or public grounds, or upon the sidewalks." Pursuant to this statutory authority, the city of Omaha adopted an ordinance, known as "No. 3,413," in the following terms: "It is hereby declared unlawful for any person or persons to circulate or distribute upon any of the public streets, alleys, sidewalks, or public grounds of the city of Omaha, or to scatter about, or to hand to any person on any public street, alley, sidewalk or public ground of the city of Omaha, any such dodgers, handbills, or circulars. It is further declared unlawful for any person, firm or corporation to employ any boy or other person to circulate or distribute any such dodger, handbill, or circular upon any public street, alley, sidewalk, or public ground of the city of Omaha. Any person, firm or corporation violating any of the provisions of this section shall be deemed guilty of a misdemeanor and upon conviction thereof shall be fined in any sum not less than two dollars ($2) or exceeding twenty dollars ($20)." Complaint was made under this ordinance charging Sid Anderson and Si Johnson with unlawfully circulating and distributing upon the sidewalks and other public places in the city of Omaha printed dodgers, handbills, and circulars. The police court found them guilty of distributing circulars on the sidewalks contrary to the ordinance, sentenced them to a fine of $2 and costs, and committed them to the city jail in default of payment. Thereupon application was made to the district court on their behalf for a writ of habeas corpus, and, upon hearing, they were remanded to the custody of the chief of police. Error is prosecuted from this judgment.

As the petitioners were convicted of distributing circulars upon the sidewalk, we need not, perhaps, consider the validity of that portion of the ordinance which makes it unlawful to hand to any person dodgers, handbills, or circulars on the public streets. We may say, however, that that portion of the ordinance must obviously be construed in connection with the remainder, and that

Digitized by Google

from the whole context it is evident that general distribution of printed matter in the form of dodgers, handbills, or circulars to the public generally, or to considerable numbers of persons, is intended, and not a mere casual handing of one or more papers of that character to one or two individuals. So construed, we think the whole ordinance is valid and constitutional. When a municipal corporation is expressly authorized by legislation to enact a certain ordinance in execution of the police power, such ordinance stands on the same basis as a statute, and its reasonableness or unreasonableness is not a matter for the courts, except as such question would bear on the constitutionality of a statute of the same nature. 1 Dillon, Municipal Corporations, § 327. Hence we need not consider whether some other or better means of meeting the evils aimed at might have been chosen. The Legislature passed on that question, and authorized the city to deal with the matter as it did. It is contended, however, that the ordinance is unconstitutional, as being in contravention of section 5, art. 1, of the state Constitution, which provides that "every person may freely speak, write or publish on all subjects, being responsible for the abuse of that liberty; and in all trials for libel, both civil and criminal, the truth when published with good motives, and for justifiable ends, shall be a sufficient defense." The ordinance in question is manifestly a police regulation intended to further the public health and safety by preventing the accumulation of large quantities of waste paper upon the streets and alleys, which might occasion danger from fire, choke up and obstruct gutters and catch-basins, and keep the streets in an unclean and filthy condition. A police regulation, obviously intended as such, and not operating unreasonably beyond the occasions of its enactment, is not invalid simply because it may affect incidentally the exercise of some right guarantied by the Constitution. In all matters within the police power some compromise between the exigencies of public health and safety and the free exercise of their rights by individuals must be reached. The test in such cases is whether the regulation in question is a bona fide exercise of the police power or an arbitrary and unreasonable interference with the rights of individuals under the guise of police regulation. Wenham v. State (Neb.) 91 N. W. 421, 58 L. R. A. 825. The ordinance in question is clearly a valid police regulation. It has no reference to or connection with freedom of speech or of the press, and its plain purpose is, not to interfere with the publication of sentiments and opinions of individuals, but to promote the cleanliness and safety of the municipality. In State v. Bair, 92 Iowa, 28, 60 N. W. 486, a statute imposed a license tax upon itinerant vendors of drugs publicly professing "by writing or printing" to treat diseases. It was held that this act did not interfe with the constitutional right of freely speal ing, writing, or publishing one's opinions. I U. S. v. Newton, 20 D. C. 226, an act of Co gress prohibiting persons from soliciting receiving political contributions in any roo or building officially occupied by any offic or employé of the United States was hel applicable to private citizens as well as public officers, and not to contravene th constitutional guaranty of free speech. I Beck v. Railway Teamsters' Protecti Union, 118 Mich. 497, 77 N. W. 13, 42 R. A. 407, 74 Am. St. Rep. 421, it was hel that a court of equity would restrain th publication of a boycotting circular whic would result in irreparable injury to the plai tiff, and destruction of its proprietary right and that such an injunction was not in vi lation of a provision of the Constitution Michigan in substantially the same words the provision of our own Constitution und consideration. Similarly, a statute forbi ding public meetings in a public park h been held valid as an exercise of the poli power, and not in contravention of the co stitutional right of free speech. Commo wealth v. Davis, 162 Mass. 510, 39 N. 113, 26 L. R. A. 712, 44 Am. St. Rep. 38

We therefore recommend that the jud ment of the district court be affirmed.

PER CURIAM. For the reasons stated the foregoing opinion, the judgment of th district court is affirmed.

NEFF v. McNEELEY et al.

(Supreme Court of Nebraska. June 19, 1901.

SALE—CONTRACT—WARRANTY—BREACH.

1. A sale of personal property by a descripti indicative of grade or quality is not a warran for the breach of which the vendee, after ha ing accepted the goods with sufficient opp tunity for their inspection and converted them his own use, can recover or recoup damages. order to give the vendee that right there mu in the absence of express warranty, be a late defect in the article sold.

Commissioners' Opinion. Department N 3. Error to District Court, Dawson Count Sullivan, Judge.

"Not to be officially reported."

Action by Edwin J. McNeeley and othe against John Neff. Judgment for plaintif Defendant brings error. Affirmed.

G. W. Fox, for plaintiff in error. E. Cook, for defendants in error.

AMES, C. This is a petition in error review the judgment of the district co for Dawson county. A jury was waiv and the cause tried to his honor, H. M. S livan, alone. The plaintiff in error was su by the defendants in error in the court low for the recovery of the purchase pr of a quantity of shingles alleged to be 14 thousands sold and delivered. The defen pleaded was that the shingles were purch

Digitized by Google

ed by order from the plaintiffs, who were a firm doing business at Tacoma, Wash., and that by the terms of the order the shingles were to be what were known or described as "Star A Star, 6-2-16 random, 85 to 95 per cent. clear, vertical grain shingles," and of the quantity named in the petition, and to be delivered to the defendant on board the cars at Lexington, this state, at the agreed price of $1.98 per thousand, and that the quantity delivered was but 127¼ thousands of a grade or quality inferior to that indicated by the above description, and that by reason of the premises the value of the shingles was $80 less than the specified purchase price. The defendant averred that he did not know of the alleged breaches of the contract of purchase until after the shingles had been unloaded and placed in his lumber yard, but the evidence showed that, being a lumber dealer, he retained them and sold them in the ordinary way of trade to his customers. The reply was a general denial. At the conclusion of the trial the following special findings were made: "The court finds that the quality of the shingles delivered by the plaintiff to the defendant was substantially Star A Star shingles. The court further finds that instead of delivering 149 thousand some hundred shingles that the plaintiff only delivered 132 thousand shingles, and that there is due plaintiff from defendant, after allowing defendant for the freight paid, the sum of $102.40, with 7% interest from May 30, 1895; to which first finding defendant excepts."

The defendant excepted, and filed a motion for a new trial upon the ground that the first finding of the court was not sustained by the evidence and was contrary to law, and the motion being overruled, and judgment entered pursuant to the findings, the case was brought to this court. The evidence as respects the matter covered by the finding complained of was conflicting, and the rule that it will not be reviewed in this court is too well established to require repetition. The complaint that the finding is contrary to law is apparently founded upon the notion that it is defective for not having affirmed or denied the literal accuracy of the description set forth in the answer and quoted above. The finding is, however, one of fact and not of law, and the court was required to find only such facts as he thought the evidence proved. Perhaps what the plaintiff intended to object to was the supposed insufficiency of the findings of fact to support the judgment afterwards rendered, but this objection is not contained in the motion for a new trial or in the petition in error. If it had been specifically made, I do not think it could have been sustained. A fair interpretation of the finding is that the quality of the shingles delivered was in compliance with the contract of purchase as set out in the answer. I do not agree with the plaintiff in error that the description amounted to a warranty for the breach of which damages could be recouped or recovered after he had accepted, retained, and sold the shingles. The symbols and figures used were simply descriptive of the grade and quality of the article sold. If the grade or quality of the article tendered did not conform to the description, there being no latent defect, the purchaser could have declined to accept it, or, having ignorantly received it into his yard, could, upon discovering the defect, have notified the vendor of the fact, and retained it subject to the order of the latter, and subject to reasonable charges, if any, for storage. But, having converted it by sale to his customers, he waived the defect, if there was one, and became bound to pay the contract price. The case, I think, falls within the principles of Maxwell v. Lee, 34 Minn. 511, 27 N. W. 196; Reed v. Randall, 29 N. Y. 358, 86 Am. Dec. 305; and McClure v. Jefferson, 54 N. W. 777, a Wisconsin decision. It is recommended that the judgment of the district court be affirmed.

ALBERT and DUFFIE, CC., concur.

Affirmed.

WILLIAMS et al. v. MILES et al.

(Supreme Court of Nebraska. July 3, 1903.)

WILL—EXECUTION—EVIDENCE—APPEAL—LAW OF THE CASE.

1. Declarations of the testator are competent evidence on an issue whether a will was made, but will not suffice, of themselves, to prove its contents.

2. Where opinions are prepared by commissioners, they must be permitted, necessarily, to state their reasons in their own way, without binding the court to all that is said arguendo, even though it concurs in the conclusions of law and express findings of fact.

3. Opinions expressed by the commissioners on matters not essential to the decision, while properly set forth to advise counsel that their arguments in briefs or at the hearing have been duly considered, do not become necessarily the law of the case, and will not preclude further investigation of such points, should they come before the court once more.

(Syllabus by the Court.)

Motion for rehearing denied.

For former opinion, see 94 N. W. 705.

J. H. Broady, A. J. Weaver, John L. Webster, John H. Atwood, and Reavis & Reavis, for appellants. F. Martin, E. Falloon, and C. Gillespie, for appellees.

POUND, C. The greater portion of the brief and of the oral argument in support of this motion is based upon a failure to distinguish between the competency and admissibility of evidence, on the one hand, and its probative force or sufficiency to establish the fact in controversy, on the other hand. We did not state that a will could be shown solely by declarations of the testator. What we did say, and now adhere to, is quite another proposition, namely, that decla-

Digitized by Google

of the testator are competent evidence on an issue whether a will was made. In Clark v. Turner, 50 Neb. 290, 69 N. W. 843, 38 L. R. A. 433, this court has said already: "We think all the cases hold that the declarations of a testator may be received in evidence to prove the existence of a will." We quoted this language, and endeavored to make the point still more clear by saying: "As to the declarations of the testator, we must distinguish between their competency and their sufficiency, standing alone, to prove the contents of the lost will." We perceive no ground for holding that the evidence as to the execution of the alleged will made at St. Louis was incompetent. Counsel argued strenuously at the original hearing that this evidence should not have been received or considered, and the opinion sought to meet this contention.

Appellees complain of a number of statements made incidentally or arguendo in the course of the opinion. In particular they object to certain remarks which conceded the suspicious or extraordinary character of some of the circumstances urged upon us by appellants. We held that the evidence sustained the contentions of appellees on these points. But it does not appear wherein there was any impropriety in recognizing the force of the matters urged upon our attention by appellants. In justice to them, we could do no less than state their position, and concede the full weight of their case. This is one of the incidents of litigation. To suppress these features of the case in deference to the feelings of one party would be to deprive the other of his right to know precisely how and why he had failed. It is contended that some of the remarks in question may prejudice other or further litigation between the same parties. Here, again, however, were we to remain silent entirely, the appellants would have just ground of complaint. If we merely recommended a judgment of affirmance, without stating fully the views we entertained, by reason of which we were moved to make such recommendation, the grounds thereof would be matter of speculation and conjecture, and erroneous constructions of the judgment might prejudice appellants much more than the appellees may be injured by any incidental statements in the opinion. Moreover, no such effects as counsel appear to apprehend are involved in such remarks. It was laid down at one time that the court was not bound beyond the points stated in the syllabus to its opinion. Holliday v. Brown, 34 Neb. 232, 51 N. W. 839. And while the court would probably not state the proposition so baldly at present, the point made in that case is unquestionably well taken, namely, that each member of the court, in the body of his opinion, must be permitted necessarily to state his reasons in his own way, without binding his colleagues to all that is said arguendo, although they concur in the conclusions of law and express findings of fact. This must be true even more of opinions prepared by commissioners. The three commissioners who sat in the case at bar came to certain conclusions, by reason whereof they recommended a judgment of affirmance. The court approved their conclusions and adopted their recommendation. What they may have thought on matters not essential to the decision, while properly set forth to advise counsel and parties that the arguments urged in the briefs and at the time of hearing were duly considered, has not become the law of the case, and will not preclude further investigation of such points, should they come before the court once more in another proceeding or on another record. Lane v. Starkey, 20 Neb. 586, 31 N. W. 238; Missouri Pac. Ry. Co. v. Fox, 60 Neb. 531, 83 N. W. 744; State v. Paxton (Neb.) 90 N. W. 983.

We therefore recommend that the motion be denied.

BARNES and OLDHAM, CC., concur.

PER CURIAM. For the reasons stated in the foregoing opinion, it is ordered that the motion be denied.

LASHMETT v. PRALL.

(Supreme Court of Nebraska. Jan. 8, 1902.)

NOTE—BONA FIDE HOLDER—FRAUDULENT CONVEYANCES.

1. The indorsee of negotiable paper before due and without notice of defenses, as collateral security for an antecedent debt, is a bona fide holder thereof for value, within the meaning of the law merchant.

2. To an action by a judgment creditor to set aside conveyances alleged to have been made in fraud of the judgment, it is a defense that the plaintiff is indebted, upon simple contract, to the judgment debtor in an amount equal to the judgment.

Commissioners' Opinion. Department No. 3. Appeal from District Court, Loup County; Kendall, Judge.

"Not to be officially reported."

Action by William D. Lashmett against John Prall. Judgment for plaintiff, and defendant appeals. Reversed.

O. A. Abbott, for appellant. A. M. Robbins and C. I. Bragg, for appellee.

AMES, C. On the 8th day of October, 1896, the appellee, William Lashmett, recovered a judgment for $1,500 and costs against the appellant John Prall, in an action for damages for tort. Before the judgment, but after the cause for action arose, Prall had conveyed certain lands belonging to him to certain of his relatives without consideration. Execution having been issued and returned unsatisfied, this action was begun to set aside the conveyances and subject the land to the judgment. As a defense to this action, Prall pleaded an indebtedness due to

¶ 1. See Bills and Notes, vol. 7, Cent. Dig. § 913.

Digitized by Google

himself from Lashmett of $2,500 and interest, upon a negotiable promissory note, executed by the latter to Sears Bros., a partnership, and indorsed and delivered for value before due to the defendant. In reply it was denied that Prall was the owner of the note, and pleaded that at the time it was executed it was agreed that it should be treated merely as a memorandum of a transaction by which Lashmett purchased a herd of cattle from Sears, the animals to be taken to Omaha, and sold and settled for at the sum actually obtained for them at the sale. It was alleged that pursuant to this agreement the cattle were sold for $2,100, and a settlement made between the parties, in consequence of which Lashmett, after deducting $1,350, previously due to him from Sears Bros., paid the residue of the $2,100 to the latter, thus satisfying the note in controversy. It is further alleged that Prall had notice of these facts before he acquired possession of the note, and it is denied that he paid value for it. The court made no general findings of fact. After finding that the conveyances by Prall were without consideration and void as to his creditors, concerning which finding there is no complaint, he found that an agreement as to the use to be made of the note was entered into between Sears Bros. and Lashmett substantially as pleaded, and that settlement and satisfaction of the indebtedness took place between the parties before the note came into the possession of Prall The court did not find when Prall acquired the note, or whether any, or if any, what, consideration he paid for it, but it was found that Prall was not an innocent purchaser of the instrument because of having received notice concerning it through his agent, John Wall. From the evidence preserved in the bill of exceptions, it appears sufficiently that Prall obtained the note before its maturity, and as a collateral security for an indebtedness exceeding its amount from Sears Bros. to himself. It is not disputed that Wall was at one time the agent of Prall, and that notice to him concerning the matter was effectual as notice to his principal. A few days after the cattle were sold Prall sent Wall to Lashmett, to attempt to get the latter to pay the proceeds of the sale in satisfaction of the indebtedness to the former. As to what occurred at the interview Lashmett and Wall are the only witnesses, and their testimony is very brief. Wall testified that Lashmett said that he had given the note, but that Sears Bros. were owing him $500, which he was entitled to have and should require to have credited thereon before he would pay it. Lashmett says that the note was not mentioned in the conversation, and that he told Wall that he (Lashmett) was owing Sears Bros. $700 or such a matter, and refused to pay him anything, and after he had gone away the witness settled with Sears Bros. One of the Sears Bros. was present, and Lashmett says told him not to pay Wall anything, but it does not appear that he had any conversation with Wall.

The court evidently disposed of the case upon the assumption that a subsisting indebtedness of the plaintiff to the defendant is not to any extent or degree a defense to the action, and did not therefore determine especially or otherwise which of these two versions of the interview is the more accurate. We are consequently called upon to determine that question for ourselves, and, in the light of all the circumstances of the case, are led to adopt the former of them. They agree in the respect that both represent Lashmett as admitting, or at least not denying, the validity of the note in its inception, and its continuing obligation for some amount. In view of such admission, we think the burden was upon the plaintiff not only to show the extent of the credit thereon to which he was entitled, but that, having had an opportunity to make his claims in that respect known to the defendant through his agent Wall, he made a full and fair disclosure of them, and withheld nothing which it was to the interest of the latter to know. Fair dealing required at least this much at his hands. That he did not so conduct himself he now admits by asserting under oath that even his admission of an indebtedness of $700 was false. This fact, in connection with other circumstances, not necessary to be recited in detail, induce us to prefer the testimony of the apparently disinterested witness Wall. This evidence is sufficient to charge Prall with notice that Lashmett was entitled to a credit on the note to the extent of $500, but was not enough to put him on inquiry as to any other of the matters pleaded in the reply in this action. The indorsement upon the note is dated as of March 12th, and the preponderance of the evidence is that it was not in fact made, nor the note transferred, until after the settlement between Lashmett and the payees on March 19th.

Thus is reached one of the vital points in the case. If Prall at the time the note was transferred to him had parted with a present consideration on the faith of it, he would have been protected by the familiar rules of the law merchant. But it is conceded that he accepted it as collateral security for an antecedent indebtedness. We are not aware that this precise point has ever been before this court. The cases of Helmer v. Commercial Bank, 28 Neb. 474, 44 N. W. 482, Koehler v. Dodge, 31 Neb. 328, 47 N. W. 913, 28 Am. St. Rep. 518, and Cropsey v. Averill, 8 Neb. 152, were all instances in which the note was accepted as collateral security for an indebtedness then created, and are supported by the great weight of authority and reason. But in Martin v. Johnson, 34 Neb. 797, 52 N. W. 819, it was held that one who accepted a negotiable note, without notice of defenses, in payment of an antecedent debt, was a bona fide holder for value, and pre-

Digitized by Google

cisely the same principles must apply to one who receives such an instrument as collateral security.

Such is also, we think, the weight of authority in this country and in England. Colebrook on Collateral Securities, § 18 et seq., and notes. Prall is therefore entitled to be regarded as an innocent holder for value of the Sears Bros.' note to the extent of $2,005 and interest. But it is urged that a simple contract debt of Lashmett to Prall is not a defense to the action, because of the general rule that such a debt cannot be set off in equity against a judgment. This rule is, however, not applicable to the case. The appellee is not seeking to set off his note against the judgment. Should his defense be upheld, the judgment and whatever legal processes are provided for its enforcement would remain unimpaired. The plaintiff below invoked the aid of a court of equity to assist him in the collection of his demand, because, he says, he is without remedy at law for the enforcement of a just claim; but if in truth he is indebted to the defendant in a sum equal to, or greater than, the amount of the judgment, the legal obstacles which he asks to have removed are afflicting him with no injustice, and it is immaterial by what instrument, or whether by any, his obligation to the defendant is evidenced. The case would be quite different if the defendant were seeking the aid of a court of equity to restrain the collection of the judgment by execution, or if, by like means, he was seeking to procure a discharge or satisfaction of the judgment. He is doing neither, but, on the other hand, the plaintiff is prosecuting a suit in equity, and should be content to submit to any equitable defense.

The persons to whom Prall conveyed his lands are the natural objects of his bounty. If Lashmett is justly indebted to him it would be inequitable to sacrifice the property by judicial sale, for the sole reason that the note in question has not been reduced to judgment, and it does not appear to us that the question of Lashmett's solvency is material. The note could, of course, not have been pleaded as a set-off in the action for tort.

We think the record discloses a complete defense, and it is recommended that the judgment of the district court be reversed, and the action dismissed.

ALBERT and DUFFIE, CC., concur.

Reversed and dismissed.

MODERN WOODMEN OF AMERICA v. COLEMAN et al.

(Supreme Court of Nebraska. July 3, 1903.)

APPEAL—OPINIONS OF COMMISSIONERS—LAW OF THE CASE.

1. Where opinions are prepared by commissioners, they must be permitted, necessarily, to state their reasons in their own way, without binding the court to all that is said arguendo, even though it concurs in the conclusions of law and express findings of fact. Williams et al. v. Miles et al. (No. 11,630; filed July 3, 1903) 96 N. W. 151.

(Syllabus by the Court.)

Error to District Court, Cass County; Ramsey, Judge.

Application for rehearing denied.

For former opinion, see 94 N. W. 814.

J. W. White, C. A. Atkinson, Jesse L. Root, J. G. Johnson, and Talbot & Allen, for plaintiff in error. S. M. Chapman and Matthew Gering, for defendants in error.

HOLCOMB, J. In this application for a rehearing by the plaintiff in error some objections are presented to the opinion last filed in which a former judgment of affirmance was adhered to. Modern Woodmen of America v. Coleman et al. (Neb.) 94 N. W. 814. Most of the propositions urged as grounds for granting a rehearing have, we think, been fully discussed and correctly disposed of in the opinion last filed. While it is urged that the opinion in the case at bar is in conflict with the principles controlling in the cases of Field v. Nat. Council of K. & L. of Security (Neb.) 89 N. W. 773, and Royal Highlanders v. Scoville (Neb.) 92 N. W. 206, we entertain the view, as pointed out in the opinion in this case, that the cases referred to are readily distinguishable, and that there exists no inconsistency or conflict of a substantial character between these several cases. Upon the main points decided in the present case it is not to be denied that there is a conflict of authority between the holdings in this and other jurisdictions. This is especially noticeable by reference to some of the recent decisions of the federal courts where kindred questions were under consideration and determined. Northern Assurance Co. v. Grand View Bldg. Ass'n, 183 U. S. 308, 22 Sup. Ct. 133, 46 L. Ed. 213, and M. W. A. v. Tevis, 117 Fed. 369, 54 C. C. A. 293. This court, however, after mature consideration, has chosen to adhere to the rule as announced by a long and unbroken line of decisions in this state, notwithstanding some other courts have recently adopted a contrary doctrine. Hartford Fire Insurance Co. v. Landfare (Neb.) 88 N. W. 779; Hunt v. State Ins. Co. (Neb.) 92 N. W. 921. This rule, so far as this jurisdiction is concerned, may now be considered as too firmly established to admit of further discussion.

Our attention is also challenged to certain portions of the opinion formulated by the commissioner, wherein it is suggested that the language used does an injustice to the plaintiff in error and the business in which it is engaged, and that these remarks of the commissioner, which are sanctioned by the court, is an animadversion not properly a part of or belonging to the opinion, and for these reasons it should be eliminated there-

Digitized by Google

from. The objectionable portion of the opinion is as follows: "Finally, it is earnestly insisted that, inasmuch as the plaintiff in error is a mutual benevolent association, it should not be held to the same strict rules as respects forfeitures and the waiver of them as are applicable between regular insurance companies and their policy holders. This consideration would appeal to us with greater force if these principles of mutuality and benevolence more frequently survived the holders of certificates, and were uniformly regarded by the associations as being applicable to and as including the persons named as beneficiaries. A charitable organization, which collects its funds with avidity, but is astute in finding excuses for not bestowing them upon the designated objects of its bounty, is not entitled to any exclusive or special consideration at the hands of the court. The enormous volume of litigation with which associations of this kind have flooded the country, and the extremely technical character of their defenses, in many cases, to actions upon their beneficiary certificates are a sufficient commentary upon an appeal for tender consideration by the judiciary." These remarks were apparently called forth by what was said in briefs of counsel for plaintiff in error. While it is insisted that nothing was advanced in briefs warranting the remarks complained of, it is at once apparent that otherwise they have no legitimate bearing on the decision rendered, and at most, we think, can be regarded as voicing only the individual views of the writer of the opinion. The commissioner deemed it proper to speak as he did in meeting an argument which he regarded as having been advanced by counsel in their briefs. The remarks do not bear directly on any of the essential legal propositions discussed and decided. By reference to the syllabus, which mentions the points decided, and on which the judgment was based, it will be observed that none refer to the discussion indulged in to which exceptions are taken. It must be at once apparent to all that the court is not committed to all that may be said arguendo by one formulating an opinion. Much that is said by way of argument, and even in stating a legal proposition, must necessarily be left in a great measure to the individual judgment and discretion of the author of the opinion. The views of the commissioner, as expressed in the excerpt we have herein copied, should not be understood as reflecting the views of the court, nor that it is committed to the statements contained therein. The essential points discussed necessary to a decision in the case were accepted and adopted as a correct exposition of the law. That which was said by the commissioner in answer, apparently, to propositions advanced by counsel should not be taken as expressing other than the individual views of the writer, and is not binding on the court, nor does it wish to be understood as indorsing the same. The rule adopted in the case of Williams et al. v. Miles et al. (No. 11,630; filed herewith) 96 N. W. 151, is applicable here.

The motion for a rehearing is denied.

STEIN v. PARROTTE et al.

(Supreme Court of Nebraska. Jan. 8, 1902.)

MORTGAGE FORECLOSURE—SALE—OBJECTIONS TO CONFIRMATION—APPRAISEMENT.

1. A party will not be permitted to assail the regularity of a decree of foreclosure by objections to confirmation of a sale made thereunder.

2. Objections to the appraisement of real estate to be sold at a judicial sale must be lodged before the sale.

Commissioners' Opinion. Department No. 3. Appeal from District Court, Buffalo county; Sullivan, Judge.

"Not to be officially reported."

Action by Wilhelm Stein against Marcus L. Parrotte and others. Judgment for plaintiff, and defendants appeal. Affirmed.

Hamer & Hamer, for appellants. Dryden & Main, for appellee.

ALBERT, C. This is an appeal from the order confirming a sale of real estate, in pursuance of a decree of foreclosure in which the mortgage was found to be a lien on the premises in controversy, subject only to a certain judgment lien in favor of the defendants Dryden and Main. The decree did not provide for a sale of the premises in satisfaction of the judgment lien, but only for the amount found due on the mortgage. It appears that, at the time the decree was rendered, an appeal was pending in this court from the judgment above referred to, which had been duly stayed by a supersedeas. The objection to the confirmation of the sale, relied upon in this court, is: "* * * That the decree of the court is incorrect in that, that the same finds that the alleged lien of John N. Dryden and Louis P. Main, for the sum of $2,138.82, is now pending in the Supreme Court, upon error proceedings, from the judgment of the court; whereas said case is pending on appeal, and a supersedeas bond has been given and approved, and there can be no sale of said premises under said judgment, and this case, by reason of such appeal, must remain undetermined until the alleged lien of the said Dryden and Main is disposed of by the Supreme Court."

In view of the argument, we are not entirely clear whether the objection goes to the regularity of the decree, or the regularity of deducting the amount of the judgment mentioned from the gross appraised value of the property. In our view of the case, it would serve no useful purpose to determine that question, because in either case the objection was properly overruled. It has been repeatedly held by this court that the reg-

¶ 2. See Mortgages, vol. 35, Cent. Dig. § 1504

Digitized by Google

ularity of the decree cannot be raised in objection to confirmation, and, equally as often, that objections to the appraisement must be made before the sale. They were not so made in this case. We discover no error on the part of the court in this record.

We recommend that the order of confirmation be affirmed.

AMES and DUFFIE, CC., concur.

Affirmed.

GINGRICH v. ROGERS.*

(Supreme Court of Nebraska. July 3, 1903.)

INSANE PERSON—DEED—VACATING—AFFIRMANCE.

1. The deed of an insane person may be avoided as against a grantee for value without notice of his grantor's insanity. Dewey v. Allgire, 55 N. W. 276, 37 Neb. 6, 40 Am. St. Rep. 468, followed.

2. The burden of showing that a conveyance was made by an insane person during an interval of lucidity is upon the party claiming under the instrument.

3. Neither the county court, nor a person under guardianship because of insanity, nor the guardian of the latter, nor all together, can ratify or confirm a conveyance of lands by the ward made previous to the guardianship, but while he was insane.

(Syllabus by the Court.)

Commissioners' Opinion. Department No. 1. Appeal from District Court, Hamilton County; Good, Judge.

Action by Peter Gingrich against James B. Rogers. Judgment for defendant, and plaintiff appeals. Reversed.

John A. Whitmore and O. A. Abbott, for appellant. Hainer & Smith, for appellee.

AMES, C. From the briefs and arguments of counsel we are led to believe that it is not controverted that the record establishes by substantially uncontradicted evidence that Peter Gingrich was, and had been for more than a year immediately prior to the happening of the transaction which is the subject of this investigation, mentally insane to a degree incapacitating him for the transaction of business. Our own opinion of the evidence directs us to the same conclusion, but under the circumstances of the case a discussion of it seems to be uncalled for. On the 12th day of July, 1898, he conveyed a farm, of which he was the owner, to the appellee, Rogers, for a gross consideration, including a mortgage lien, assumed by the purchaser, of about $3,370. A preponderance of the evidence is to the effect that this price was, if not adequate to the then value of the land, at least not so widely inadequate thereto as to be indicative of fraud or undue means, and the trial court would have been abundantly justified by the evidence in finding especially that the purchaser was ignorant of the mental incapacity of his vendor. For some time prior to this date, however, Peter had been offering to sell the property at a price of $3,800 or $4,000, and his brothers, Christian Gingrich and another, had proposed to pay him therefor $5,500, and to enter into obligations for a conveyance of it to him at any time upon demand upon a return of the purchase price and interest at the rate of 6 per cent. per annum, and this offer we infer to have been subsisting at the date of the sale. In the month of September following the conveyance Peter was taken into custody by the board of commissioners of insanity, and committed by them for treatment to the Hospital for the Insane at Lincoln, and on the 22d day of November in the same year Christian Gingrich was by the county court of the proper county duly appointed the guardian of Peter and his estate, and duly qualified as such. Within three or four weeks after his appointment the guardian offered to refund to Rogers the purchase price of the land with lawful interest, and to pay him the value of improvements put upon the place by the latter, and demanded a conveyance to his ward; but met with a refusal. Rogers, however, avers that he offered to reconvey upon being reimbursed his expenditures to a slightly larger amount, and with the highest legal rate of interest, but that his offer was declined by the guardian. It is not contended that during any of the times hitherto mentioned Peter's mental capacity had been permanently restored to him, nor has he since been relieved from guardianship, although he has been set at large from the custody of the Hospital for the Insane.

This action was begun by the guardian on the 25th day of April, 1901, to compel the appellee, Rogers, to accept the above-mentioned offer, and reconvey the lands to the ward. Thus far this case is in all important particulars identical with that of Dewey v. Allgire, 37 Neb. 6, 55 N. W. 276, 40 Am. St. Rep. 468, which establishes both that the guardian has capacity to sue, and that he is entitled to recover upon the facts stated. But the appellee seeks to distinguish this case from the other in two particulars. The answer, although admitting the guardianship, denies the insanity generally, and alleges specifically that on the date of the sale, July 12, 1898, Peter was of sound mind, and capable of transacting the business in question. In argument counsel supports this allegation by saying that on that day no one testifies to having seen the vendor except the appellee and a real estate agent, who negotiated the sale, neither of whom saw anything in his conduct which led him to suspect his sanity, and that no one testifies to having observed any such conduct during the entire month of July; hence it is contended that, although he may have been insane both before and after that time, it may have been that on the day of the sale he was enjoying a lucid interval. The fact that he conveyed away for $3,370 property for which he appears to have a continuing offer of $5,500 is

*Rehearing denied October 21, 1903.

Digitized by Google

not significant in support of this contention, and, besides, it having been shown, as we said, by apparently indisputable testimony, that he had been continuously insane both for several months previously, and for at least as great a length of time subsequently, we think that both the natural and legal presumptions are that his mental incapacity throughout the period was uninterrupted, and that the burden of proving a lucid interval by clear and satisfactory evidence is upon an interested party claiming an advantage by reason of it. We do not think that this requirement has been met.

An attempt is also made to distinguish this case from Dewey v. Allgire, supra, by the contention that the sale in question was ratified, or at least acquiesced in, for such a length of time as amounted to an affirmance of it. The mental incapacity of the vendor continued uninterruptedly from the date of the conveyance until the 22d day of November following, when his affairs were put in the hands of a guardian, who has not since been discharged from his trust. Whether since the latter date he has recovered the normal use of his mental faculties is much disputed in the record, but, in our opinion, is immaterial. If he has done so, his legal status has remained unchanged. Counsel for the appellee cites us to no authority and offers no argument for holding that a person under guardianship can enter into contracts or make conveyances, although actually of sufficient natural capacity so to do. Manifestly, such a rule would lead to inextricable confusion, and would, in practical effect, annul the office and powers of a guardian, and it follows of necessity that the ward can lawfully ratify or affirm no contract or conveyance which he is legally incapacitated from making. The principal, if not the only, argument seriously urged by counsel in support of the claim of ratification is based upon other grounds. At the time the land was conveyed to Rogers he gave, in part payment therefor, and as directed by his vendor, a bank check for $215, payable to the order of the real estate agent, out of which the former received $100, which he deposited in a bank, and for which he received a certificate of deposit payable to his own order; and further, in part payment, Rogers executed his bank check for $1,413, payable to the order of Peter, and delivered it to him. The guardian, upon his appointment, found both of these latter mentioned papers in the possession of his ward. In his petition to the county court praying his appointment as guardian he represented the estate of Peter as consisting of these documents, and also of an interest in real estate of the value of $1,000—having reference to the land now in dispute. After an inquiry the county court was of opinion and found that the estate consisted of "notes, certificates of deposit, and checks of the probable value of $1,550." The guardian shortly thereafter demanded and received payment of these instruments, and deposited the proceeds thereof in various banks, receiving in lieu thereof interest-bearing certificates payable to his own order in his official character. Subsequently he expended some $450 of these funds for the maintenance and benefit of his ward. Counsel for the appellee insists that these transactions amounted to a ratification by the guardian and county court, or, what amounts to practically the same thing, to an election to enforce the collection of the securities given as payment for the land, and to abandon any claim or right to rescission. Here again counsel fails to cite us any authority upholding the right or power of the guardian or county court to make such an election, and it would be manifestly an extremely objectionable public policy which would vest such a discretion in either or both. Untrammeled as it would be, if it should exist at all, it might frequently be employed by incompetent or dishonest officials to the detriment and destruction of the ward's estate; and, once having been exercised, it would, as counsel rightly contends, be irrevocable. We are cited to section 27 of chapter 34 of the Compiled Statutes of 1901 as expressly conferring this power upon county courts, but it is quite evident from the most cursory reading that the Legislature in enacting that section did not have in mind the subject here adverted to. When it is said by the authorities that courts of equity may exercise the right of election in such cases, no more is meant than that those courts are the universal guardians of all persons under disabilities, and will see to it, when properly appealed to, that their estates are conserved so far as is consistent with the general rules of law and with good conscience. They would be shorn of a most beneficial part of their jurisdiction if their freedom of action could be hampered or taken away at the discretion of the very officials and trustees whose conduct is frequently the subject of investigation by them, whose transactions it is their province to supervise and control, and whose nonfeasances and misfeasances they are required to remedy and punish.

The district court found generally for the defendant and dismissed the action. In our opinion, the judgment is unsupported by the evidence, but, if the appellee is to be reimbursed his purchase price, with interest, he should be equitably called upon to account for the value of the use and occupation of the premises during his possession of them as well since and before the trial.

It is recommended that the judgment of the district court be reversed, and that the case be remanded for a further accounting, and for the entry of a decree in accordance with the prayer of the petition and this opinion.

HASTINGS and OLDHAM, CC., concur.

Digitized by Google

PER CURIAM. For the reasons stated in the foregoing opinion, it is ordered that the judgment of the district court be reversed, and that the case be remanded for a further accounting, and for the entry of a decree in accordance with the prayer of the petition and this opinion.

SCHMUCK v. HILL.

(Supreme Court of Nebraska. Nov. 20, 1901.)

LIBEL — PUBLICATION — OBJECTION TO EVIDENCE—EXPERT WITNESSES — COMPETENCY —INSTRUCTIONS—VERDICT.

1. While the sending of a libelous letter to the person defamed does not amount to publication thereof, where the sender so addresses it that in ordinary course it will reach a third person, and as a natural result it does reach and its contents become known to such third person, there is a sufficient publication.

2. Hence, where a libelous letter concerning plaintiff was sent by mail, addressed to plaintiff's employer and plaintiff jointly, and delivered at her employer's shop, where it was found by plaintiff, and turned over unopened to her employer, who read it, *held*, that there was a publication.

3. One who puts a libel in circulation is liable for any subsequent publications which are the natural consequence of his act.

4. An objection to a question propounded to a witness is to be judged by the question itself, and its relation to the then state of the case.

5. If writings offered as evidence of handwriting are admitted by a party to be his, but he claims that their form is the result of duress or fraud, the proper course is to show such fact for the purpose of affecting their weight.

6. The competency of expert witnesses is a question largely within the discretion of the trial court, and its rulings thereon will not be reversed unless clearly erroneous as a matter of law.

7. An instruction which merely points out the legal consequence of certain facts, of which there is evidence, in case the jury find them to be established, is not erroneous.

8. Where several causes of action are set up in the petition, a separate verdict upon each is not improper.

9. The rule that a plaintiff in a civil action is only required to prove his case by a preponderance of the evidence is not altered by the fact that the acts charged upon the defendant are highly discreditable or even criminal.

10. Evidence examined, and *held* to sustain the verdict.

Commissioners' Opinion. Department No. 2. Error to District Court, Gage County; Stull, Judge.

"Not to be officially reported."

Action by Cora Bell Hill against John Schmuck. Judgment for plaintiff, and defendant brings error. Affirmed.

E. O. Kretsinger, for plaintiff in error. Hazlett & Jack, for defendant in error.

POUND, C. Cora Bell Hill, hereinafter styled plaintiff, sued John Schmuck, hereinafter referred to as defendant, upon four causes of action—two for libel by reason of a letter alleged to have been sent and published to her sister and employer, Grace Hill, and a similar libelous communication posted upon a telephone pole in front of the post office in the city of Beatrice, and two for slander. The trial resulted in a verdict and judgment for plaintiff, from which error is now prosecuted.

The letter which is the basis of the first cause of action was sent by mail, addressed to "Ms. Grass Hill, Cora Hill," at the business of plaintiff's employer. The postman delivered the letter by placing it under the door, where it was found by plaintiff, and by her delivered unopened to her sister, who opened it and became acquainted with its contents. Under these circumstances, it is urged on behalf of the defendant that there was no publication by him, but that the letter having been first found by plaintiff, and by her turned over to her sister, plaintiff and not defendant, gave it publicity. It is undoubtedly true that sending a libelous letter to the person defamed does not amount to publication thereof. On the other hand where the sender so addresses it that in ordinary course it will reach a third person and, as a natural result of the way in which it is sent or addressed, it does reach and its contents become known to such third person, there is sufficient publication. Thus in Delacroix v. Thevenot, 2 Stark. (Eng.) 63, a libelous letter addressed to the plaintiff was received, opened, and read by his clerk in the regular course of his employment. It was shown that the defendant knew that the clerk habitually opened letters addressed to plaintiff, unless marked "Private." This was considered evidence of intention that the letter should be read by a third person, and the defendant was held liable. In Seip v. Deshler, 170 Pa. 334, 32 Atl. 1032, a libelous letter addressed to plaintiff was opened and read by her agent, who had charge of her business correspondence, and had reason to suppose the letter related to her business. It was held that there was a publication. In the case at bar the letter was addressed to a third person as well as to the plaintiff, at the third person's place of business, and it appears that defendant knew that such third person was the plaintiff's employer. Moreover, the name of the employer stood first in the address. It would seem clear that he intended the employer to see and read the libelous communication, and that plaintiff's handing the letter unopened to her was an ordinary and natural result of the manner in which it was addressed, and the known relation of the addressees to each. But it may be observed further that in any case plaintiff's sister, as one of the joint addressees, had a right to see and read a letter which had come to her shop through the mails; and hence handing it to her was not a voluntary publication by plaintiff, but a necessary result of the manner in which defendant sent and addressed it. The same state of facts was presented in Fonville v. McNease, Dud. (S. C.) 303, 31 Am. Dec. 556

¶ 1. See Libel and Slander, vol. 32, Cent. Dig. § 108.

Digitized by Google

and it was held that if the other addressee read the letter, or required the plaintiff to turn it over, there would be a publication.

An assignment of error which has been pressed strongly relates to the ruling of the trial court upon certain questions asked of the plaintiff for the purpose of showing that the letter and its contents became known to the public and to the citizens of Beatrice. Of course, if the libel was republished and given currency by plaintiff herself, defendant would not be liable for the resulting damage. On the other hand, one who publishes a libel is liable for any subsequent publications which are the natural result of his act. It was alleged in the petition that the libel had been seen and read by the public, and had gained publicity; and, so far as the court could judge from the pleadings and the questions themselves, the evidence called for was proper. An objection to a question propounded to a witness must be judged by the question itself, and its relation to the then state of the case. If the answer was unresponsive and improper, it might have been stricken out. If the subsequent course of the testimony showed that the plaintiff, and not the defendant, was responsible for the republications, a request for an instruction that defendant was not liable therefor would have been proper. But the court had to rule on the questions themselves, and they were not objectionable on their face. Missouri P. R. Co. v. Fox, 60 Neb. 531, 552, 83 N. W. 744. A similar question is presented by the rulings of the court upon certain envelopes written upon by defendant, and received as evidence of his handwriting. He admitted that the writing on these envelopes was his; but it is claimed that, in ignorance of his rights, he was induced or compelled to write upon them by the United States district attorney during criminal proceedings growing out of the transaction, and that he was deceived into copying or endeavoring to copy and imitate the address on the envelope containing the libel in question. As he himself testified before the writings were offered that they were his, the court properly admitted them. If they were obtained by duress or fraud, the proper course was to show such fact for the purpose of affecting their weight as evidence. This was done, and, in view of defendant's testimony as to where and how they were written, it was for the jury to settle their evidential value. Objection is also made to the testimony of certain witnesses as experts in handwriting. One of these had seen the defendant write, and knew his writing, independent of his expert qualifications. The qualifications of the other witness complained of were not extensive. But the competency of expert witnesses is a question largely within the discretion of the trial court, and its rulings thereon will not be reversed unless clearly erroneous as a matter of law. Missouri P. R. Co. v. Fox, 60 Neb. 531, 83 N. W. 744. There was sufficient foundation laid, so that we cannot say the testimony was absolutely incompetent.

Several instructions given by the court are excepted to as assuming facts in issue. We do not think any of them fairly open to this objection. Each of them is clearly conditioned upon the jury finding the facts on which the rules announced are stated to depend. There was evidence of these several facts, and the instructions merely pointed out their legal consequences in case the jury found them to be established. The other instruction criticised was not complained of in the motion for a new trial, and is not reviewable. By the direction of the court, the jury made a separate finding and assessment of damages upon each cause of action. We think this was not only not improper, but eminently favorable to defendant, and no reason has been suggested for believing that it could have prejudiced him or his cause in any way. 2 Thompson, Trials, § 2640.

Finally it is urged that the verdict on the first two causes of action is contrary to the evidence, and in this connection we are asked, in view of the highly discreditable nature of the acts charged upon the defendant, and the fact that they involve two criminal offenses, to hold that they must be fastened upon him conclusively by the evidence. It is fundamental that a plaintiff in a civil action is only required to prove his case by a preponderance of the evidence. Where a party seeks to impeach or to vary the usual meaning of his own formal acts, or to impeach the solemn certificate of an officer, it may be that more is required to make out a preponderance of the evidence than in other cases. But the ordinary rule is not altered because the acts alleged against the defendant are discreditable or even criminal. We have gone over the evidence on each cause of action, and find it ample to sustain the verdict. Indeed, we have been impressed that defendant had an unusually fair and dispassionate trial, in view of the gross indecency of the libel, and the wanton and malicious manner in which it was posted in one of the most conspicuous spots in the city of Beatrice. In justice to the plaintiff, however, we do not think we ought to give it further currency by discussing the evidence in detail.

It is recommended that the judgment be affirmed.

SEDGWICK and OLDHAM, CC., concur.

Affirmed.

BULLARD v. LAUGHLIN.*

(Supreme Court of Nebraska. July 3, 1903.)

OBJECTIONS TO EVIDENCE—APPEAL—REVIEW.

1. Evidence examined, and *held*, that an objection to a question put to a nonexpert witness on a trial before a justice of the peace, which clearly called for his conclusion or opinion, and not a statement of fact, was properly sustained.

Digitized by Google

*Rehearing denied October 7, 1903.

2. Where, in an action before a justice of the peace, the evidence was conflicting, and it cannot be said that his judgment was clearly wrong, the order of the district court, on a proceeding in error, sustaining such judgment, will be affirmed.

Commissioners' Opinion. Department No. 2. Error to District Court, Nemaha County; Stubbs, Judge.

"Not to be officially reported."

Action by Melle E. Bullard against Etta S. Laughlin. Judgment for defendant, and plaintiff bring error. Affirmed.

B. Frank Neal, for plaintiff in error. Kelligar & Ferneau, for defendant in error.

BARNES, C. The defendant herein commenced this action against her sister, the plaintiff in error, before a justice of the peace of Nemaha county, and alleged in her bill of particulars: That the defendant was indebted to her for work and labor as follows: To 12 weeks' work from August 17, 1897, to December 9, 1897, at $2.50 per week, $30; to 8 weeks' works as nurse and other general work from December 9, 1897, to February 5, 1898, $40; to 40 weeks' work from February 5, 1898, to December 9, 1898, at $2.50 per week, $110. That the said defendant agreed to pay her, the said plaintiff, the reasonable value of said services. That defendant accepted said services and received the benefit thereof. That said services were reasonably worth the sum of $180. That there had been paid on the said work and labor the sum of $15, leaving a balance due the plaintiff from the defendant of $165, no part of which had been paid; and prayed for a judgment against the defendant for the said sum of $165 and costs of suit. To this bill of particulars the defendant answered as follows: "(1) Denied each and every allegation contained therein. (2) Alleged that about the time alleged in plaintiff's petition plaintiff became a member of the family of the defendant, with the understanding and agreement that the defendant was to support, clothe, and care for the plaintiff and her minor child, and that plaintiff was to live with the defendant, and be a member of her family for such period as plaintiff might desire; that at the time plaintiff became a member of defendant's family she was without a home, and had to depend upon going out to labor for herself and child; that there never was any agreement for the payment of wages to the plaintiff, but, on the other hand, there was a distinct understanding between the parties that plaintiff and her minor child were to be members of the family of defendant, and that defendant was to support and clothe them during such period as they might choose to remain with her, and was not to include wages." On these issues the cause was tried before the justice without a jury. The court found that the plaintiff had worked for the defendant for the period of 60 weeks; that there was an implied contract that the defendant was to pay the plaintiff a reasonable compensation for her services, which the court itemized and found to be as follows: Fifty-two weeks at $2 per week, $104; eight weeks at $5 per week, $40—making a total of $144; that defendant had furnished clothing to the plaintiff in the value of $28, leaving a balance due the plaintiff from the defendant of $116, for which sum the justice rendered judgment against defendant. A motion for a new trial was filed before the justice, and overruled. The evidence was preserved in a bill of exceptions duly certified by him, and the cause was taken to the district court by the defendant by a petition in error. On a hearing of the cause in that court the findings and judgment of the court below were sustained and affirmed, and from the judgment of the district court the plaintiff therein brings the case on error to this court.

1. It is contended that the justice of the peace erred in sustaining the objection to question 323 found in the bill of exceptions, and that the district court erred in affirming the ruling of the justice therein. The question was as follows: "Q. What would you say was the treatment accorded by Mrs. Bullard to Mrs. Laughlin—the treatment usually accorded to hired help, or was it that which is usually extended to members of the family?" This question was objected to as being immaterial, and calling for the opinion and conclusion of the witness, and not a statement of facts, and the objection was sustained. The witness to whom this question was put was one James Hanaford, who had testified that he was present at the Bullard home during a part of the time when Mrs. Bullard was confined to her bed by reason of sickness; and it is claimed that the answer would have tended to show whether or not Mrs. Bullard stood to Mrs. Laughlin and her minor child in loco parentis. If it be conceded that such would have been the result of the answer, yet the question was objectionable as calling for the conclusion or the opinion of the witness. He should have been required to state the manner of treatment, the facts in relation to it, and it was for the court to draw the conclusion from these facts. There was no error in sustaining the objection, and this contention of the plaintiff must fail.

The plaintiff also contends that the evidence does not sustain the judgment. An examination of the record discloses that there was a conflict of evidence on the question as to whether or not defendant herein was to receive pay for her services. She testified that plaintiff requested her by letter to come and live with her, and assist in the work about the house and premises, promising to pay a reasonable compensation therefor. This was denied by the plaintiff. The defendant also testified that at another time, when nursing the plaintiff, who was ill, the plaintiff said to her "that, if anything should happen, and she should not get well, I will

Digitized by Google

receive my wages just the same." This was denied by the plaintiff, but she admitted that they had some talk about the matter. The plaintiff testified that she never made any arrangements or agreement with the defendant to pay her wages, but admitted that her services were worth more than the board of herself and minor child and the articles of clothing which she had purchased for her.

It appearing that there was such a conflict of evidence as we have described, it was proper for the district court to sustain the finding and judgment of the justice of the peace. The district court rightly concluded that the justice, having heard the evidence of the witnesses, having had an opportunity to observe their demeanor upon the trial, their apparent truthfulness or lack thereof, and all the incidents which go to make up the trial, was better able to determine to which party he should give the most credit. And the same rule should prevail in the district court that we have so often announced as the rule of this court, that, where there is some competent evidence to sustain the finding of the justice, and it cannot be said that his judgment was clearly wrong, it should be affirmed.

We therefore hold that the judgment of the district court was right, and we recommend that it be affirmed.

ALBERT and GLANVILLE, CC., concur.

PER CURIAM. The conclusions reached by the Commissioners are approved, and, it appearing that the adoption of the recommendations made will result in a right decision of the cause, it is ordered that the judgment of the district court be affirmed.

CHAFFEE et al. v. SEHESTEDT et al.

(Supreme Court of Nebraska. July 3, 1903.)

MECHANIC'S LIEN—PRIORITY OF MORTGAGE—FORECLOSURE.

1. The lien of an ordinary mortgage is not subordinate to mechanics' liens because the money which it was given to secure was loaned for the purpose of improving the mortgaged premises, and under an express contract that it should be so used. Henry & Coatsworth Co. v. Halter, 79 N. W. 616, 58 Neb. 685, followed and approved.

2. Proof of the allegation that no proceeding at law has been had, in a suit to foreclose a real estate mortgage, is required for the benefit of the mortgagor. The omission of proof of this allegation in a contest between lienors is, at most, error without prejudice.

Commissioners' Opinion. Department No. 1. Error to District Court, Douglas County; Keysor, Judge.

"Not to be officially reported."

Action by Clarence L. Chaffee against Leopold Sehestedt and others. From the judgment, Chaffee and certain of the defendants bring error. Affirmed.

Martin Langdon and S. A. Searle, for plaintiffs in error. Gaines, Kelby, Storey & Martin and George A. Magney, for defendants in error.

OLDHAM, C. This cause of action was instituted by the plaintiff in the court below for the purpose of foreclosing a mechanic's lien on two lots situated in Douglas county, Neb. The owner of the premises, the mortgagee, and other lienors were made parties defendant. The mortgagee, the Omaha Building & Loan Association, filed an answer and cross-petition, alleging that the lien of its mortgage was prior to that of plaintiff and the cross-petitioners, and praying for a decree of foreclosure. On issues thus joined between the mortgagee and the lienors, a trial was had, and a judgment rendered decreeing a foreclosure of the mortgage and sale of the property, and finding that the lien of the mortgage was superior to the various liens of the mechanics and materialmen. An accounting was also had of the amount due on each of the liens of the mechanics and materialmen, and these were all adjudged to prorate as a second lien upon the premises. To reverse this judgment and decree, error proceedings have been instituted in this court by the second lienors. The mortgagors and owners of the premises acquiesced in the decree of the district court, and do not complain of the judgment.

The first contention of plaintiffs in error is that the money loaned to the owners of the lots by the association was advanced for the purpose of promoting the erection of the buildings on the lots in controversy, and that consequently the mortgage taken to secure this advance should be held an inferior lien to the claims of the mechanics and materialmen. It is conceded that the mortgage was executed and recorded before any contract for building or repairs was entered into. It is also shown by the record that, when the owners of the lots applied to the association for the money, they stated in their application that the money was to be used for the purpose of erecting buildings upon the lots. It is also shown that some of the money advanced by the association was used for the purpose of paying for the erection of the buildings, and that some of the money was paid direct to the mechanics and materialmen on orders given by the mortgagor upon the mortgagee. It is also shown that one of the agents and officers of the association frequently visited the buildings during the time of their erection, and had knowledge, in a general way, of the amount of money that was being expended for the improvements. There is also some evidence that tends to show that this officer of the association suggested to the owners of the property that, if the amount of money already loaned was not sufficient to pay for the improvements on the premises, he would recommend a further loan for that purpose, and that, in conformity with this agreement, he did recommend an additional loan after the contracts

had been let, and the buildings partially or fully completed; that, when he found the amount of money it would take to fully complete the work, his company declined to loan more than $175 on defendant's last application. The lien for the amount last advanced was held by the trial court to be inferior and junior to the liens of the mechanics and materialmen, and as to this part of the judgment no complaint is made.

The question then to be determined is, do these facts show that the association was a promoter of the erection of these buildings so as to bring this case within the rule announced in Bohn Mfg. Co. v. Kountze, 30 Neb. 719, 46 N. W. 1123, 12 L. R. A. 33; Millsap v. Ball, 30 Neb. 728, 46 N. W. 1125; and Cummings v. Emslie, 49 Neb. 485, 68 N. W. 621. Bohn Mfg. Co. v. Kountze and Millsap v. Ball are both based upon a contract for the sale of the land, wherein it was stipulated, as a part of the purchase contract, that the buildings should be erected. The proper rule to be deduced from these cases is, as stated in Hoagland v. Lowe, 39 Neb. 412, 58 N. W. 197, that where "a vendor of real estate, holding or owning the legal title, authorizes or requires the vendee to erect improvements upon the premises, * * * the lien of laborers or materialmen who performed labor or furnished material for the improvements will attach to the interest of both vendor and vendee, and be prior to the lien of the vendor for unpaid purchase money." It is apparent that the facts in the case at bar clearly take it without the rule announced in these cases, for the mortgagee in this case was not the owner of the property on which the improvements were erected, and only loaned money to the owner for the purpose of enabling him to make the improvements. In Cummings v. Emslie, supra, the facts showed that the mortgagee had agreed to take a lien second to that of the incumbrancers for all the money he had advanced for the purpose of making the improvements in excess of $1,000. On proof of this agreement the court held his mortgage a prior lien to that of the materialmen for $1,000, and a subsequent lien for the remainder of the money advanced. In the case at bar no agreement is shown between the mortgagee and the mortgagor that the lien of the mortgage for $2,000 was to be taken subject to any other lien. The import of the testimony clearly shows that this mortgage was taken as a first lien, and that all incumbrances prior to it were discharged from the proceeds of the lien. In this state of the record, we do not think the case falls within the reason of the rule of the cases relied upon by counsel for plaintiff in error. On the contrary, we think it is and should be governed by the doctrine announced in Henry & Coatsworth Co. v. Halter, 58 Neb. 685, 79 N. W. 616, in which Sullivan, J., speaking for the court, says: "Whatever may be the logic of the earlier adjudications in this state, we are, by the decisions just mentioned, irrevocably committed to the doctrine that the lien of an ordinary mortgage is not subordinate to mechanics liens merely because the money which it was given to secure was loaned for the purpose of improving the mortgaged premises and under an express contract that it should be so used. The rule of decision in this class of cases has been too long established to be now successfully assailed."

The only other objection called to our attention is that there is a lack of evidence on the part of the mortgagor tending to show that no action at law had been commenced to recover the mortgage debt. It is conceded that this is true; that no evidence of any nature was introduced to support this allegation in the cross-petition of the mortgagee. It is also conceded that, if this objection had been presented by the mortgagor, it would have been well taken. It is urged, however, by counsel for defendant in error, that where the controversy is solely between lienors, as in this case, it is not necessary to prove this allegation; that the provision of section 850 Code Civ. Proc., requiring this allegation in the petition, was enacted solely for the benefit of the mortgagor; and that other parties cannot be interested in it. It will be observed that the mortgagee in this cause of action did not in the first instance seek a foreclosure of his lien, but that he was brought into the case at the suit of another lienor and asserted his mortgage in an answer and cross-petition. While, as against the mortgagor, the fact that the mortgagee was brought into the suit as a defendant would not cure the admission to allege in his cross-petition and prove that no action at law had been brought for the collection of the mortgage debt, we think, however, that a different rule should obtain in a contract between lienors. Section 851 of the Code provides, in substance, that where a judgment has been obtained in a suit at law for the money demanded, or any part thereof, no proceedings shall be had in such case to foreclose the mortgage until an execution has been returned unsatisfied in whole or in part, showing that the defendant has no property from which to satisfy the judgment, except the mortgaged premises. It was held by this court, in construing this kindred section of the statute in Simmons Hardware Co. v. Brokaw, 7 Neb. 405, that the provisions requiring the return of an execution unsatisfied before proceedings to foreclose could be maintained were enacted for the benefit of the debtor, and that, in a contest between lienors in which the senior mortgagee was made a defendant, the junior mortgagee could not complain because this allegation was not proven. We see no good reason for extending the rule requiring proof of the allegation that no action at law has been maintained in a suit to foreclose a mortgage beyond the scope that it has already been given

Digitized by Google

by this court. In each of the cases in which a reversal has been ordered because of the failure of this technical proof, it has been done on complaint made by the debtor and mortgagor. Even if an action at law had been maintained by the mortgagee in the case at bar, such fact could not affect the priority of his lien; and unless, as a result of such fact, he had collected all or a part of his indebtedness, it would in no wise affect the rights of subsequent lienors. If the subsequent lienors relied on a payment of the whole or a part of the indebtedness of the mortgagee, they should have pleaded this fact as an affirmative defense, but no such issue was tendered in the lower court. The whole combat was waged for a priority of the liens, and, if there be technical error in the record because of the failure of the mortgagee to prove this allegation, it is, at most, error without prejudice to plaintiff and cross-petitioners.

It is therefore recommended that the judgment of the district court be affirmed.

AMES and HASTINGS, CC., concur.

PER CURIAM. The conclusions reached by the Commissioners are approved, and, it appearing that the adoption of the recommendations made will result in a right decision of the cause, it is ordered that the judgment of the district court be affirmed.

SULLIVAN TRANSFER CO. v. PASKA et al.

(Supreme Court of Nebraska. July 10, 1901.)

FORCIBLE ENTRY AND DETAINER—APPEAL.

1. Prior to Act of 1901 (Laws 1901, p. 484, c. 85), no appeal to district court lay from judgment in forcible entry and detainer, of a justice of the peace. Armstrong v. Mayer (Neb.) 83 N. W. 401.

Commissioners' Opinion. Department No. 1. Error to District Court, Lancaster County; Holmes, Judge.

"Not to be officially reported."

Action by Louis Paska and others against the Sullivan Transfer Company. Judgment for plaintiffs, and defendant brings error. Reversed.

W. B. Comstock, for plaintiff in error. Sawyer, Snell & Frost, for defendants in error.

HASTINGS, C. This is a forcible entry and detainer case. It was tried in justice court of Lancaster county, the defendant found guilty, and judgment of restitution entered. Defendant took the case by appeal to the district court of Lancaster county, where trial was had before a jury, resulting in a verdict of guilty, and another judgment of restitution. From this judgment defendant brings error to this court.

Defendant in error raises the point that the district court had no jurisdiction, for the reason that, as decided in Armstrong v. Mayer (Neb.) 83 N. W. 401, no appeal will lie from the judgment in forcible entry or detainer, of a justice of the peace, in this state. The amendment of 1883 (Laws 1883, p. 327, c. 82) to section 1030 of the Code, by which it was sought to provide for such an appeal, is held to be unconstitutional in the case just cited. It follows that the district court had no jurisdiction, and this judgment must be reversed.

It is therefore recommended that the judgment of the district court be reversed, and the case remanded, with directions to dismiss the appeal.

DAY and KIRKPATRICK, CC., concur.

Reversed with directions.

NORTHDRUFT v. CITY OF LINCOLN.

(Supreme Court of Nebraska. July 3, 1903.)

APPEAL—REVIEW—PRESUMPTIONS—DEFECTIVE SIDEWALKS.

1. In a case where a verdict has been directed by the trial court, the reviewing court will assume the existence of every material fact which the evidence of the complaining party establishes or tends to prove. Paxton v. State, 81 N. W. 383, 59 Neb. 460.

2. But this does not change the presumption that the judgment of the district court is correct; and it is the duty of the plaintiff in error in all cases to point out the errors by reason of which he claims the judgment should be reversed, and, unless the error complained of is affirmatively established by the record, the judgment will be affirmed.

3. In an action against a municipal corporation to recover damages for personal injuries alleged to have been sustained by reason of the defective condition of a sidewalk, that the city had actual or constructive notice of the defect complained of is a substantive fact to be established by the evidence, and this fact cannot be left to the mere inference or conjecture of the jury.

4. Former judgment in this case (92 N. W. 628) adhered to.

(Syllabus by the Court.)

Petition for rehearing denied.

For former opinion, see 92 N. W. 628.

BARNES, C. This case is before us on a rehearing. In our former opinion we affirmed the judgment of the trial court (92 N. W. 628), and in that opinion the facts are stated so fully that no further statement is necessary.

The first point made by counsel is that, because the district court directed a verdict, there is no presumption in favor of the correctness of its ruling, and that this court should carefully scrutinize the record in order to find something upon which to base a reversal of the judgment. This is not the law. The rule is a general one that a court of review will presume that the judgment of the district court is correct, and it is the duty of the plaintiff in error in all cases to point out

¶ 3. See Municipal Corporations, vol. 36, Cent Dig. § 1725.

Google

and present the errors by reason of which he claims the judgment should be reversed. "All presumptions favor the regularity of the proceedings of the district court, and an order or judgment made therein will not be reversed unless the error complained of is affirmatively established by the record." Maginn v. Pickard, 57 Neb. 642, 78 N. W. 295; Alexander v. Irwin, 20 Neb. 204, 29 N. W. 385; McBride v. Lathrop, 24 Neb. 93, 38 N. W. 32; Birdsall v. Carter, 16 Neb. 422, 20 N. W. 287; Am. Investment Co. v. McGregor, 48 Neb. 779, 67 N. W. 785; First Nat. Bank v. Stockham, 59 Neb. 305, 80 N. W. 899; Roehl v. Roehl, 15 Neb. 655, 19 N. W. 632. "The findings and judgment of a court of record will always be presumed to rest upon sufficient evidence, unless the contrary be clearly shown by the record. Error is never to be presumed." Singleton v. Boyle, 4 Neb. 414; Creighton v. Newton, 5 Neb. 101; Mo. Pac. Ry. Co. v. Hays, 15 Neb. 226, 18 N. W. 51. It is contended, however, that a contrary doctrine is announced in Paxton v. State, 59 Neb. 460, 81 N. W. 383. We do not so understand that case. It merely states the well-established rule that in a case where a verdict has been directed by the trial court the reviewing court will assume the existence of every material fact which the evidence for the complaining party establishes or tends to prove. This does not change the presumption, nor does it relieve the complaining party of the duty devolving upon him to point out to the court the evidence which proves, or tends to prove, the facts which he relies on for a reversal of the judgment; and where there is a failure to affirmatively show the existence of such evidence, and in fact it is not contained in the record, the same presumption obtains and is decisive of the case where a verdict is directed, as well as in any other case.

Counsel contends that the jury might well have presumed that the city had notice of the defective condition of the sidewalk, to wit, the particular defect which caused the injury complained of in this case; and that, where there was a scintilla of evidence to establish such a fact, the trial court should have submitted the question to the jury. Although the older cases appear to support such a doctrine, the rule is now well settled that a jury will not be permitted to pass upon a matter about which reasonable minds cannot differ, even though there is a scintilla of proof in the record. Rogers v. Marriott, 59 Neb. 759, 82 N. W. 21; Knapp v. Jones, 50 Neb. 490, 70 N. W. 19; McKinney v. Hopwood, 46 Neb. 871, 65 N. W. 1055. In Knapp v. Jones the court said: "The evidence must be such as to justify different conclusions without reasoning irrationally." An examination of the record discloses that there was no direct evidence whatever establishing or tending to establish the fact of notice on the part of the city. But it is contended by counsel that the boards used in the new sidewalk were too rotten to hold nails, and tha this fact was the cause of the accident. Th is merely an inference of counsel, for the ev dence does not sustain the claim. It is tru that some of the boards in the old walk wer too rotten to hold nails, and that was on reason, and perhaps the principal reaso why the old walk was condemned an thrown into the street. This was done son 60 days before the accident occurred, and appears that a new walk was constructe out of the good material contained in the o one, which was only about half its forme length; and the evidence shows, without di pute, that the rotten boards in the old wal were rejected, and only the best ones used the construction of the new walk. It plain, therefore, that the evidence that the were rotten boards in the old walk, whic would not hold nails, does not tend to sho that there were any such boards in the ne walk, especially in the face of the ove whelming and undisputed testimony of man witnesses that the new walk was perfect safe. Counsel devotes a large part of h last brief to the question of notice, which is claimed the city had as to the conditio of the old walk. There can be no questio but that the city was abundantly charge with notice of the condition of that walk, b such notice is not material in the case at ba because the old walk had been replaced b the new one about two months prior to th accident.

It is next contended that the city is cha ged with notice because the city sidewa inspector had seen the new walk some tim prior to the accident. Counsel says that th jury could infer from this fact that the wa was bad, and that he knew that fact, no withstanding the evidence on that point all one way. It is claimed that the ju would have the right to say that it did n believe the city sidewalk inspector, and co clude that he really found it unsafe. N such extravagant power is conceded to juri by modern courts. The jury must deci upon the evidence. So long as all the wi nesses testified that the new walk was saf the mere fact that the city inspector saw does not prove that he had notice of fac which are not shown to have existed. Th fact that a board became loose after he i spected the walk is no evidence that it wa loose at the time of his inspection. If th witnesses who testified as to the conditio of the walk, or any of them, had stated tha it was unsafe, the jury might have inferre from the fact that the sidewalk inspecto saw it, that he knew of the conditions test fied to by the witnesses. But the proof wit reference to the condition of the new wal prior to the accident affords no ground fo any inference whatever of notice. There nothing in the evidence to show that th loose board which caused the accident b came loose until at or about the momen when the accident occurred. The record a

Digitized by Google

fords no ground for the inference drawn by counsel. Repeated reference is made to the condition of the stringers at the end of the walk, and it is stated that they protruded at that point because the boards were loose and had come off. This statement is unwarranted. The testimony shows that the stringers protruded because no boards had been put upon them. This is a very different thing from the condition portrayed by counsel in his brief. It is made clear by the evidence that the stringers had not been sawed off at the end, and no boards had been nailed to them at that point, so they protruded somewhat at the end of the walk. Taking the bare fact that the stringers projected slightly at this point, and ignoring the explanation clearly shown by the record, counsel bases an elaborate argument upon the supposed rottenness of the boards, which caused them to become loose, and claims that it shows a general state of bad repair, and is therefore evidence of notice. This argument is based on an incorrect statement of the facts. The lower court heard the testimony, and drew from it the same conclusion which we drew from reading it. We find no ground for the inferences insisted upon by counsel. This court will not draw an inference contradictory to the record in order to sustain an assignment of error. Nebraska Land Co. v. McKinley-Lanning Loan & Trust Co., 52 Neb. 410, 72 N. W. 357. To sustain a verdict for damages in this case on account of the alleged negligence of the city, there must be evidence that the injury resulted from the negligence charged, and in this charge the element of notice is a substantive fact. This fact cannot be left to the mere inference or conjecture of the jury. Kilpatrick v. Richardson, 37 Neb. 731, 56 N. W. 481; O. & R. V. R. Co. v. Clarke, 39 Neb. 73, 57 N. W. 545; Omaha St. R. Co. v. Leigh, 49 Neb. 785, 69 N. W. 111; City of Omaha v. Bowman, 52 Neb. 300, 72 N. W. 316, 40 L. R. A. 531, 66 Am. St. Rep. 511.

It is next contended that the city is estopped because it had condemned the old walk, and ordered a new one of brick and stone to be built in its place. Having done this, and afterwards suffered a wooden walk to be laid, not in accordance with the ordinance, counsel seems to think that the city thereby became an insurer of the safety of all persons using the walk. We know of no ground upon which to rest such a holding. It is clear that no estoppel as to third persons could arise under such circumstances. Oliver v. Lansing, 59 Neb. 219, 80 N. W. 829. The city is not an insurer of the safety of pedestrians, and is only bound to use reasonable diligence to keep its walks in a safe condition for travel. The question as to what material should be used in the construction of the walk was one between the city and the lot owner. It could have compelled him to construct a brick or stone walk, and, in case of default on his part, could have constructed one at his expense. But as between itself and the public generally, it was bound only to maintain a reasonably safe walk. There is nothing inherently unsafe in a wooden sidewalk, even though it does not conform to the requirements of the city ordinances; and if, as all the evidence in this case seems to establish, the fact existed that the walk in question, as reconstructed, was in a good condition and a reasonably safe walk, no liability attached to the city by reason of the accident.

In our former opinion we drew a distinction between general defects, and particular ones having no relation to the defect which caused the injury complained of, and in so doing gave our views of the case of Plattsmouth v. Mitchell, 20 Neb. 228, 29 N. W. 593. Counsel now complains of that construction. Our position in that respect was well taken, and is amply sustained by authority. In the case of Ruggles v. Town of Nevada, 63 Iowa, 185, 18 N. W. 866, the court said: "To charge a town with constructive notice of a defective plank in a sidewalk, by reason of which an injury has accrued, it is necessary to show that the identical defect which led to the accident was open and visible, and no questions with respect to the condition of the walk in the locality near by can be admitted." It was held in the case of Carter v. Town of Monticello, 68 Iowa, 178, 26 N. W. 129, that, "while a town will be bound by a notice of a defect in a sidewalk communicated to a member of the town council, such notice must relate to the defects which caused the injury sued for, and notice to the councilmen of defects which had been repaired before the accident occurred will not charge the town with notice of those which caused the injury, although they occurred at the place where the repairs had been made." In the case of Village of Shelby v. Clagett, 46 Ohio St. 549, 22 N. E. 407, 5 L. R. A. 606, it was held: "In an action against a municipal corporation to charge it with liability to one injured by a defective sidewalk, it cannot, as a matter of law, be charged with notice of the defect that caused the injury from the fact merely that it knew of the existence of a defect in the same sidewalk." The same rule is announced in Dundas v. City of Lansing, 75 Mich. 499, 42 N. W. 1011, 5 L. R. A. 143, 13 Am. St. Rep. 457; Fuller v. City of Jackson, 82 Mich. 480, 46 N. W. 721.

No other defect is mentioned in the new walk in question, except the fact that the stringers protruded near the place where the accident occurred. This defect, if defect it was, would convey no notice whatever to the city of the fact that a board had become loose upon the walk at another near-by point. The testimony shows, however, that the stringers, at the place where they protruded, were imbedded in the soil, and were level with the surface of the ground, so that this fact could have in no way contributed

Digitized by Google

plaintiff's injury, and cannot be said to have rendered the walk unsafe.

A careful re-examination of the record convinces us that there was no evidence tending to charge the city with notice of the particular defect which caused the plaintiff's injury, and for that reason we recommend that our former judgment be adhered to.

OLDHAM and POUND, CC., concur.

PER CURIAM. For the reasons given in the foregoing opinion, the former judgment in this case is adhered to.

DARRAH v. JUEL et al.

(Supreme Court of Nebraska. Nov. 20, 1901.)

TRIAL—FRAMING ISSUES—INSTRUCTIONS—OBJECTIONS—APPEAL—REVIEW.

1. Parties to an action can waive the statutory time given in which to frame the issues for trial, and, by proceeding to trial by agreement or without objection, the time will be deemed to have been waived.

2. Instructions to which no objections are taken at the time they are given or refused are not reviewable in this court. Humpert v. McGavock, 80 N. W. 1038, 59 Neb. 346, followed.

3. Questions of fact determined by a jury upon fairly conflicting evidence will not be examined in error proceedings in the Supreme Court. Lydick v. Gill, 77 N. W. 340, 57 Neb. 89, followed.

Commissioners' Opinion. Department No. 1. Error to District Court, Nemaha County; Baker, Judge.

"Not to be officially reported."

Action by J. W. Darrah against Otto Juel and others. Judgment for defendants, and plaintiff brings error. Affirmed.

A. J. Burnham and M. L. Hayward, for plaintiff in error. W. H. Kelligar, G. W. Cornell, and Ed. Ferneau, for defendants in error.

DAY, C. This is an action to recover damages for malicious prosecution brought by J. W. Darrah in the district court of Nemaha county against Otto Juel, Geo. W. Cornell, and Edgar Ferneau. The trial resulted in a verdict for the defendants, upon which judgment was rendered, to review which the plaintiff has brought the case on error to this court.

It will not be necessary to set out the facts which form the basis of the action in order to understand the propositions urged by the plaintiff for a reversal of the judgment.

One of the assignments of error in the motion for a new trial, as well as in the petition in error, relates to an alleged irregularity in proceeding with the trial of the case before the time had expired for making up the issues. This contention cannot be considered by this court, because the record not only shows that no objection was made by the plaintiff to proceeding with the trial, but shows affirmatively that the trial was had by agreement of parties. Undoubtedly parties to an action can waive the statutory time given t frame the issues, and, by proceeding to tri by agreement or without objection, the tim will be deemed to have been waived.

It is also urged that there was error i the giving of certain instructions to the jur We are precluded from examining the allege errors, for the reason that no exception wa taken either to the giving of the instruction or the refusal to give certain instructio asked. It is now the well-settled practic that instructions to which no exceptions a taken at the time they are given to the ju or refused are not reviewable in this cou This rule is supported by the following a thorities: Humpert v. McGavock, 59 Ne 346, 80 N. W. 1038; Scofield v. Brown, Neb. 221; Brooks v. Dutcher, 22 Neb. 644, N. W. 128; Johnson v. Swayze, 35 Neb. 11 52 N. W. 835; Darner v. Daggett, 35 Ne 696, 53 N. W. 608; Bouvier v. Stricklett, Neb. 792, 59 N. W. 550; Levi v. Fred, Neb. 564, 57 N. W. 386; Glaze v. Pascal, Neb. 732, 59 N. W. 382. Notwithstandi this rule of practice, we have examined t instructions in the light of the evidence, an in our judgment, they fairly and fully sta the law of the case.

It is also urged that the evidence was n sufficient to sustain the verdict. The que tion of fact arising from a consideration the evidence was submitted to the jury, a its finding upon the disputed evidence ca not be disturbed. No rule is more thoroug ly established than that questions of fa determined by a jury upon fairly conflicti evidence, will not be re-examined in err proceedings in the Supreme Court. Lydi v. Gill, 57 Neb. 89, 77 N. W. 340.

There are other objections urged in t petition in error, but, as they are not argue they will be deemed to have been waived.

It is therefore recommended that the jud ment be affirmed.

HASTINGS and KIRKPATRICK, CC., co cur.

Affirmed.

McVEY et al. v. PEDDIE.

(Supreme Court of Nebraska. July 3, 1903.

APPEAL BOND—LIABILITY OF PARTIES.

1. The principal and sureties upon an unde taking in an appeal prosecuted, under a vo statute, to a court to which in fact no lawf appeal lies, are liable on the instrument if t court, without objection, entertains the appe and upon a retrial of the issues renders a jud ment adverse to the appellant.

(Syllabus by the Court.)

Commissioners' Opinion. Department N 1. Error to District Court, Antelope Count Boyd, Judge.

Action by Alexander Peddie against Hen McVey and others. Judgment for plaintif and defendants bring error. Affirmed.

Digitized by Google

E. D. Kilbourne, for plaintiffs in error. S. D. Thornton, for defendant in error.

AMES, C. On the 8th day of July, 1899, the defendant in error, Peddie, in a suit in justice's court against the plaintiff in error McVey for forcible detention, recovered a judgment for the restitution of the demanded premises. For the purpose of prosecuting an appeal to the district court, McVey and the two other plaintiffs in error, Carrabine and Libbey, as sureties, executed an appeal undertaking, conditioned as provided by section 1030 of the Code, as it was attempted to be amended by the Session Laws of 1883, p. 327, c. 82. The case was thereupon docketed, as upon appeal, in the district court, and, a jury being waived, proceeded to trial, and a judgment for restitution. In this proceeding and judgment all parties appear to have acquiesced, no objection having at any time been made to the jurisdiction of the latter-named court. This is an action against the principal and sureties upon the appeal undertaking, upon which the defendant in error obtained a judgment in the district court. In Armstrong v. Mayer, 60 Neb. 423, 83 N. W. 401, this court held that the attempted amendment providing for an appeal in such cases is unconstitutional and void, and the sole contention of the plaintiffs in error is that because of that fact the undertaking is void, also, and that therefore no action can, or could have been, properly founded thereon. If the defendant in error had ignored the attempted appeal, and sued out a writ of restitution from the justice's court, as he might, doubtless, have lawfully done, or if by objection or motion he had attacked the jurisdiction of the district court, as it must also be presumed he could have successfully done, a subsequent action upon the undertaking would have raised an issue differing from that presented upon the record before us. It is not necessary to decide now what would have been the liability of the appellant or of his sureties in such a case, or whether they would have been liable at all. In this case the appellant obtained by his proceeding all that he stipulated for in the instrument in suit. He had a trial upon the merits in the district court, where a judgment was rendered in which all parties acquiesced, and during the pendency of the proceedings he remained in possession and enjoyed the fruits of the demanded premises. The absence of jurisdiction in the district court did not affect him injuriously, and, whether the judgment which was there recovered was void or voidable, it was rendered at his instance, and he cannot justly be permitted to attack it collaterally in an action upon an undertaking by which he deliberately promised to respond in damages if it should be adverse to his desires. The question was recently before this court in Stevenson v. Morgan, 93 N. W. 180, and decided adversely to the plaintiffs in error. The issues of law arising in the two cases are substantially identical, and the conclusion in the opinion cited appears to us to be supported both by reason and authority. Perhaps the leading authority upon the subject is that of Daniels v. Tearney, 102 U. S. 415, 26 L. Ed. 187, in which the principles involved are sufficiently elucidated. We think that the considerations in view of which the obligation of the principal is upheld apply with appeal force to his sureties. They are not thus held beyond what is "nominated in their bond," nor called upon to respond for any consequences for which they did not expressly stipulate to respond in the instrument which they deliberately executed.

It is recommended that the judgment of the district court be affirmed.

HASTINGS and OLDHAM, CC., concur.

PER CURIAM. For the reasons stated in the foregoing opinion, it is ordered that the judgment of the district court be affirmed.

EDNEY v. BAUM et al.

(Supreme Court of Nebraska. Dec. 4, 1901.)

ABATEMENT—ACTION—DISMISSAL—SUIT TO REINSTATE.

1. An action does not abate by the removal or discharge of an administrator as party plaintiff during its pendency.

2. A suit in equity may be maintained for the purpose of reinstating a case erroneously dismissed, when there is no adequate legal remedy therefor.

Commissioners' Opinion. Department No. 2. Error to District Court, Lancaster County; Baker, Judge.

"Not to be officially reported."

Action by Gertrude T. Edney against James E. Baum and others. Judgment for defendants and plaintiff brings error. Reversed.

George A. Adams and R. Cunningham, for plaintiff in error. L. C. Burr, for defendants in error.

OLDHAM, C. This litigation was begun a number of years ago, and phases of it have been before this court before. Edney v. Baum, 44 Neb. 294, 62 N. W. 461; Id., 53 Neb. 116, 73 N. W. 454; Id., 59 Neb. 147, 80 N. W. 502. The phase of the case now presented arises on a petition filed by Gertrude T. Edney, as administratrix of the Edney estate, in the district court of Lancaster county, Neb., for the purpose of having an order formerly made by that court dismissing her action set aside, and the case reinstated. The action of the court complained of in this petition is, in substance, that an action was pending in said court, brought by the administratrix and executor of the Edney

¶ 1. See Abatement and Revival, vol. 1, Cent. Dig. § 233.

Digitized by Google

estate, against the Baums, for damages for deceit and false representations in a trade of a stock of hardware for certain real estate; that this case had proceeded to trial and verdict, when the defendants Baum filed their motion for a new trial, and, as one of the grounds thereof, alleged that the administratrix and executor had been discharged of their office by the probate court in which they had been appointed, before the trial commenced, and, as a consequence thereof, they had no legal capacity to maintain the suit. Upon the hearing of this motion, the court set aside the verdict and dismissed the action. The action so dismissed is now sought to be reinstated. The defendants Baum filed their answer to this petition of the administratrix in this case, and a trial was had thereon, which resulted in a finding for the defendants, and a judgment dismissing the petition, whereupon Mrs. Edney, as administratrix, prosecutes error to this court.

It is urged that the findings and judgment of the trial court are contrary to law. The court, by its findings, held that the letters of administration of the parties claiming to be plaintiffs had been revoked and annulled by the county court of Douglas county, and that court had jurisdiction of both the parties and the subject-matter. Conceding this to be true, does this fact abate the action? It is not claimed that this revocation was made before the inception of the action. The record shows that this alleged revocation was made on the 29th day of February, 1896, while the record discloses that this action had been pending for a number of years prior thereto; had been once tried, taken to the Supreme Court, reversed, and remanded. Edney v. Baum, 44 Neb. 294, 62 N. W. 461. Section 336, c. 23, Comp. St. 1901, provides that "when an executor or administrator shall die, be removed from office, or resign, or when his letters shall be revoked, during the pendency of any suit in which he is a party, the suit may be prosecuted by or against the executor or administrator appointed in his place, if any shall be appointed, in like manner as if it had originally been commenced by or against such last executor or administrator." Section 45 of the Code of Civil Procedure provides that "an action does not abate by the death, marriage or other disability of a party or by the transfer of any interest therein during its pendency if the cause of action survive or continue. In the case of marriage of a female party, the fact being suggested on the record, the husband may be made a party with his wife; and in case of the death or other disability of the party the court may allow the action to continue by or against his representative or successor in interest." It is clear from these provisions of the statute that the action does not abate because the representative capacity of the plaintiffs had terminated. The right of th plaintiff to carry on the suit may have te minated, but this did not authorize the cou to dismiss the action, nor was it legal groun upon which the court could dismiss it, an its action in this respect was clearly e roneous.

The remaining question is, can this erro of the trial court be corrected by this pr ceeding? A suit in equity for this purpos can only be maintained when there is n adequate legal remedy, and only then t prevent a failure of justice. When this judg ment of dismissal was rendered, there wa no one before the court clothed with autho ity to represent the decedent's estate. A these proceedings were had in the absenc of any representation of this estate, and wha was done was not binding on the estate. had no day in court. There was no on who could complain, prosecute error, or a peal. The quondam personal representativ attempted to prosecute error from this jud ment, but their petition was dismissed f want of interest. Edney v. Baum, 53 Ne 116, 73 N. W. 454. At this time there wa no personal representative in existence— least, none which the court, by reason of th record of the probate court, would recogni as such. Then there was no one who cou prosecute error from this action of the tri court. This being so, the legal remedy gone. But this does not extinguish the rig of the personal representatives of this esta to have this action tried on its merits. Th so-called trial was nothing, binding no on because it was not a trial between the pe sonal representatives of this estate and th defendants, but between strangers to th estate and the defendants, and hence no tri in fact and in law. Equity never suffers wrong without a remedy, and, whatever ma be the merit or demerit of that suit, the pe sonal representatives of this estate have th legal right to have their day in court, an the case tried on its merits. This was n done through no fault of theirs.

There is some complaint made for the re son that Cavanaugh, as executor, does n join in this action. The petition shows hi to be one of the parties plaintiff, and w find no disclaimer of his in the record. B if he refused to join as plaintiff, this wou not defeat the action, as, under section 42 the Code, he may be made a defendant.

It is therefore recommended that the jud ment of the district court be reversed, an the cause be remanded, with directions to th court below to reinstate the original cas and proceed with its hearing as if no tri had ever been had.

SEDGWICK, C., concurs. POUND, C., ha ing been of counsel, did not sit.

Reversed, with directions.

Digitized by Google

KEARNEY COUNTY BANK v. DULLENTY et ux.*

(Supreme Court of Nebraska. July 3, 1903.)

FRAUDULENT CONVEYANCE—EVIDENCE.

1. Evidence examined, and *held* to show that the consideration for the conveyance of a certain city lot moved from the husband, and that the title thereto was taken in the name of the wife for the purpose of placing it beyond the reach of the creditors of the former, and of hindering and delaying them in the collection of their debts.

Commissioners' Opinion. Department No. 2. Appeal from District Court, Lancaster County; Holmes, Judge.

"Not to be officially reported."

Action by the Kearney County Bank against William Dullenty and wife. Judgment for defendants, and plaintiff appeals. Modified.

S. B. Pound and F. H. Woods, for appellant. A. G. Greenlee, for appellees.

ALBERT, C. The petition in this case shows that the plaintiff on the 16th day of January, 1897, recovered a judgment against the defendant William Dullenty in the county court of Lancaster county for some $960, on a note executed by said defendant on the 19th day of January, 1894, which by its terms was payable on the 19th day of April of that year; that at and before the date of said note said defendant was the owner of a certain tract of farm land in Lancaster county, and that afterward, on the 31st day of August, 1894, he conveyed the land to his father-in-law, who in the following year conveyed it to Mary Dullenty, wife of the defendant William, and his codefendant in this case; that the said conveyances were without consideration, and were made in fraud of the plaintiff, and for the purpose of hindering it in the collection of its judgment. It is also alleged in the petition that the defendants claim that said farm lands at the time of said conveyances were owned and occupied by them as their homestead, but that the value thereof is in excess of $2,000, and that the defendants had long since abandoned such premises as their homestead. The plaintiff alleges further that the defendant William on the 19th day of November, 1900, purchased a certain lot in the city of Lincoln, and paid the consideration thereof; that for the purpose of hindering, delaying, and defrauding the plaintiff and his other creditors in the collection of their debts, he caused the title thereof to be taken in the name of his wife; that she now holds the title to said lot in trust for her said husband and codefendant; and that the defendants have resided on and occupied, and still reside on and occupy, such lot, and claim the same as their homestead. The plaintiff asks that the deeds conveying the farm lands be set aside, and that said lands be subjected to the payment of its judgment; that in case the court finds that said land is the homestead of the defendants, not exceeding in value the sum of $2,000, then that the title to the said lot be adjudged to be in the defendant William; and that the same be sold in satisfaction of the plaintiff's judgment. The answers of the defendants admit their relationship, that the defendant William owned the farm land as stated in the petition, his conveyance thereof to his father-in-law, and the reconveyance thereof by his father-in-law to the defendant Mrs. Dullenty, but denies all the other allegations of the petition. Further answering, the defendants allege that, at and before the execution of the note upon which the judgment was based, they were husband and wife, and resided upon and occupied the said farm land as their family homestead, and that the same is still their homestead, and has never been abandoned by them. The answers also allege facts showing that the cause of action, so far as relates to the farm land, is barred by the statute of limitations. The reply is a general denial. The court found in favor of the defendants, both as to the farm land and as to the said lot. With respect to the farm land, the court specifically found that, at the time of the conveyances thereof hereinbefore mentioned, it was and still is the homestead of the defendants. A decree was rendered accordingly, and the plaintiff appeals to this court.

In this court the plaintiff abandons its contention as to the farm land, and the only question presented is whether the decree of the district court with respect to the city lot is warranted by the evidence. The history of the transaction which resulted in the acquisition of the legal title to the lot in question by Mrs. Dullenty, as shown by the evidence, is as follows: The defendant William Dullenty was the owner of a schoolland contract, and in 1897 or 1898 borrowed $145 from one Moran, and transferred the contract to him as security for the debt. Moran, without any consideration, turned the contract over to his wife, who is a sister of the defendant Mrs. Dullenty. Afterward the debt of $145 was paid, but the contract and assignment do not appear to have been returned to William Dullenty. Afterward Mrs. Moran turned the contract over to Mrs. Dullenty, who in turn traded it for the lot in question. It does not appear that Mrs. Dullenty paid her sister anything whatever for the contract, nor that she made any promise to pay anything for it. There is an entire absence of evidence tending to show that she gave any consideration whatever for the contract. The trade for the lot was made in November, 1900, after the return of the execution issued on the plaintiff's judgment. The conveyance was not recorded for more than a year afterward. The whole transaction in regard to this lot was among relatives. Taking into account that fact, the nature of the transaction, the attending circumstances, and the situation of the parties at the time, there is but one reasonable in-

*Rehearing denied October 21, 1903.

Digitized by Google

ference to be drawn, and that is that, when the contract was given in exchange for the lot in question, it was the property of William Dullenty. In other words, the sole consideration for the lot was paid or given by him, and the conveyance was taken in the name of his wife for the purpose of placing the property beyond the reach of his creditors. That being true, the defendant William Dullenty is the real owner of the lot, and it is liable for the satisfaction of his debts.

But the defendants contend that, the plaintiff having alleged in its petition that the lot in question is the homestead of the defendants, it is not entitled to any relief as to this lot in the absence of an allegation that it is worth more than $2,000. A sufficient answer to this is that the petition does not allege that the lot is the homestead of the defendants. The allegation in that behalf is as follows: "That ever since the purchase of said lot said defendants have resided on and occupied, and still reside upon and occupy, such lot, and claim the same as their homestead." The petition also alleges that they claim the farm land as their homestead. The prayer of the petition is, in effect, that the court determine which of the two pieces of property is the homestead of the defendants. The defendants put this question at rest by their answer when they claimed the farm land as their homestead. We think the allegations of the petition are ample to warrant a decree in favor of the plaintiff in respect to the lot.

Another contention of the defendants, stated in the language of their brief, is "that if there were any proof that he owned it clear, there is nothing in the record to show the value of the lease when it was assigned by Mrs. Moran to Poska. Even then, if he owned it clear of liens, and if the lease constituted the whole of the consideration for the lot, plaintiff could impress a trust on the property only to the extent of the value of the lease, and the burden is on him to show that before he is entitled to any relief. He cannot take for the payment of his judgment any profit the sisters may have made in the transaction." As it appears to us from the evidence, William Dullenty owned the school-land contract when it was traded for the lot. The trade was in fact his trade. He paid the consideration, and took the beneficial title to the lot. That being true, the value of the school-land contract is immaterial, and a resulting profit from the transaction to his wife or her sister is out of the question.

It is therefore recommended that the decree of the district court with respect to the farm lands be affirmed, and that that portion relating to the city lot be reversed, and the cause remanded, with directions to the district court to enter a decree as to such lot in favor of the plaintiff, in accordance with the prayer of its petition.

BARNES and GLANVILLE, CC., concur.

PER CURIAM. The conclusions reached by the Commissioners are approved, and, it appearing that the adoption of the recommendations made will result in a right decision of the cause, it is ordered that the decree of the district court with respect to the farm lands be affirmed, and that that portion relating to the city lot be reversed, and the cause remanded, with directions to the district court to enter a decree as to such lot in favor of the plaintiff, in accordance with the prayer of its petition.

HALL v. WESTERN TRAVELERS' ACC. ASS'N.

(Supreme Court of Nebraska. July 3, 1903.)

MUTUAL BENEFIT INSURANCE—AMENDMENT OF CONSTITUTION.

1. A member of a mutual insurance company, who accepts membership subject to such provisions of the constitution as are then in force or may be thereafter adopted, is bound by a reasonable amendment to the constitution subsequently adopted.

2. Such companies are self-governing bodies, and courts will interfere in case of amendments to their constitution only when the amendment is unfair, operates oppressively, or to the disturbance of vested rights. Amendments which do not thus operate are not unreasonable.

3. On the facts stated, *held*, that the amendment was reasonable, and binding on the assured.

(Syllabus by the Court.)

Commissioners' Opinion. Department No. 2. Error to District Court, Douglas County; Slabaugh, Judge.

Action by Thomas L. Hall against the Western Travelers' Accident Association. Judgment for defendant, and plaintiff brings error. Affirmed.

Thomas L. Hall, for plaintiff in error. O'Neill & Gilbert, for defendant in error.

ALBERT, C. The defendant is a body corporate organized under the laws of this state for the purpose of creating and maintaining "a mutual fraternal insurance association for the benefit of those who become its members." On the 28th day of February, 1894, one William R. Parks became a member of the association, and received a certificate of membership, which, omitting the formal parts, is as follows: "This Certifies that William R. Parks is while in good standing a member of the Western Travellers Accident Association, and is entitled to all its Benefits under the provisions on the back of this Certificate, and named in the Constitution and By-Laws and subject to the warranties, contained in the application for membership." The provisions on the back of the certificate are: "Payments will be made: For injuries received through external, violent and accidental means and resulting in death, loss of hands, both feet or both eyes, $5,000; Perma-

¶ 1. See Insurance, vol. 28, Cent. Dig. § 1855.

Digitized by Google

nent bodily disability, $2,500; Loss of one foot, one hand and one eye, $1,250; Temporary bodily disability $25 per week, for a period not to exceed 52 weeks." On the back of the certificate there is also a clause making the constitution and by-laws of the association, the application for membership, and the certificate the contract between the association and the certificate holder. In his application for membership the assured expressly agreed to accept membership "subject to the provisions and limitations of the constitution and by-laws of the association now in force or that may be hereafter adopted." At the date of the certificate the constitution expressly provided for its revision and amendment. Afterward, the association duly adopted the following amendment to its constitution: "The association shall not be liable for disappearances, nor shall the association be liable for injuries occasioned, wholly or partly, directly or indirectly, by any of the following acts, or causes, occurring while so engaged or affected: Disease, bodily and mental infirmity, hernia, orchitis, fits, vertigo. * * *" On the 28th day of December, 1901, and after the adoption of said amendment, the assured, in a fit of vertigo, fell, and through the external, violent, and accidental means received bodily injuries, which, independently of all other causes, wholly disabled him for a period of one week. He then made claim for indemnity under his certificate, and duly complied with the rules and regulations of the association in that behalf. Thereafter he assigned his claim for indemnity to the plaintiff in this case. The association refused to pay the claim, and the plaintiff brought this action to recover it. The case was submitted to the district court on a stipulation of the parties, and judgment given for the defendant. The plaintiff prosecuted error to this court.

By agreement of the parties the sole question presented to this court is whether the amendment to the constitution, excepting injuries received as a result of vertigo from the class for which the association would pay indemnity, is binding on a certificate holder whose certificate was issued before such amendment was adopted, but whose injury occurred thereafter. That a member of a mutual insurance company, who accepts membership subject to such provisions of the constitution as are then in force or may be thereafter adopted, is bound by a reasonable amendment to the constitution, subsequently adopted, is no longer an open question in this state. In Farmers' Mutual Ins. Co. v. Kinney (Neb.) 90 N. W. 926, this court, speaking through Oldham, C., says: "An examination of many adjudged cases on this question leaves no doubt in our mind that under a great weight of authority a member of a mutual insurance company, who agrees in his application to be bound by subsequent by-laws of his association, will, when such subsequent by-laws are reasonable, and enacted under properly delegated authority, be bound by those subsequently enacted in the same manner that he is bound by those in existence at the time his certificate of membership is issued." The following authorities support the doctrine just stated: Hobbs v. Association (Iowa) 47 N. W. 983, 11 L. R. A. 299, 31 Am. St. Rep. 466; Borgards v. Association (Mich.) 44 N. W. 856; Hughes v. Ins. Co. (Wis.) 73 N. W. 1015; Stohr v. Society (Cal.) 22 Pac. 1125; Supreme Commandery v. Ainsworth, 71 Ala. 443, 46 Am. Rep. 332; Ellerbe v. Faust (Mo.) 25 S. W. 390, 25 L. R. A. 149; Daughrty v. Knights of Pythias, 48 La. Ann. 1203, 20 South. 712, 55 Am. St. Rep. 310; Fugure v. Mut. Society, 46 Vt. 362; McCabe v. Father Mathew Soc., 24 Hun, 149; Supreme Lodge v. Knight, 117 Ind. 489, 20 N. E. 479, 3 L. R. A. 409; Montgomery Co. Ins. Co. v. Milner (Iowa) 57 N. W. 612; St. Mary's Benefit Soc. v. Burford's Adm'r, 70 Pa. 321; Moerschbaecher v. Sup. Council, 188 Ill. 9, 59 N. E. 17, 52 L. R. A. 281; Robinson v. Templar Lodge (Cal.) 49 Pac. 170, 59 Am. St. Rep. 193; Falconer v. Societa (Sup.) 61 N. Y. Supp. 873.

In view of the holding of this court in Farmers' Mutual Ins. Co. v. Kinney, supra, it would seem that the only question left in this case is whether the amendment in question, excepting injuries received as a result of vertigo from the class of injuries against which the association would indemnify its members, is reasonable. In the determination of that question the nature of the association should be kept in mind. It is not maintained for the purpose of profit to itself as a legal entity, but for the benefit of its members, in order to distribute the burden of individual misfortunes of a specified class among the entire membership. Mutuality is its controlling feature. It is obvious, therefore, that for a benefit bestowed on one member there must be a corresponding burden imposed on the other members collectively, and that a proper adjustment of the benefits to the burdens is essential to its existence as a mutual organization. The constitution is the fundamental compact between the members, and usually, as in the present instance, outlines the plan for the distribution of the benefits and adjustment of the burdens among them. Unerring foresight is not the gift of any man or body of men, and experience alone can demonstrate whether the plan authorized by a constitution is the best, or even practicable. The welfare of the association, if not its existence, may demand a change in the constitution and a readjustment of the relations between the benefits and burdens. The association is a self-governing body, and it is for its members to determine when such change is required or advisable. The courts will interfere only when such change is unfair or operates oppressively, or to the disturbance of vested rights. When it does not do that, it is reasonable, within the meaning of the

Digitized by Google

term as used by this court. In this case the amendment operated not only to deprive each member of the benefits to which he would be entitled in case of an accident resulting from vertigo, but also relieved each member from the corresponding burden. It operated alike on each member, and gave no advantage to one over another. Such an amendment cannot be said to be unfair or oppressive, nor to deprive any member whose injury, as in the present case, occurred after the adoption of the amendment, of any vested right. That being true, the amendment was a reasonable exercise of the right of the association to amend its constitution, and, having expressly reserved that right when it issued the certificate, the assured and his assignee are bound by the amendment. Most of the cases heretofore cited support this conclusion; none of them conflict with it.

It is recommended that the judgment of the district court be affirmed.

BARNES and GLANVILLE, CC., concur.

PER CURIAM. For the reasons stated in the foregoing opinion, the judgment of the district court is affirmed.

TOWER v. McFARLAND et al.

(Supreme Court of Nebraska. Nov. 20, 1901.)

PLEADING—EVIDENCE—INSTRUCTIONS.

1. A material fact necessary to a defense which is not pleaded is presumed not to exist, and admission of evidence to establish it is error.

2. Instructions submitting an issue not in any way pleaded are erroneous.

Commissioners' Opinion. Department No. 1. Error to District Court, Furnas County; Norris, Judge.

"Not to be officially reported."

Action by Addison Tower against T. James McFarland and others. Judgment for defendants, and plaintiff brings error. Reversed.

L. H. Alberts and M. B. Reese, for plaintiff in error. J. T. Fults and McClure & Anderson, for defendants in error.

HASTINGS, C. The petition in error in this case includes 18 assignments, which, however, all seem based upon two main questions, viz.: First. Can a justification of an alleged trespass on the ground that the facts committed were done in the opening and improvement of a public highway be permitted, where the existence of no public highway is alleged? Second. Are the county authorities, in opening a section-line road, bound by the location of the line as previously established by the adjoining landowners? This was an action by one who alleged he was the owner and in possession of certain lands to recover damages for trespass. The defendants answered, first denying all of plaintiff's allegations; then denying that they did any of t acts alleged unlawfully or upon land own by the plaintiff; then they say that defen ant John V. Anderson was county comm sioner of Furnas county, and defendant James McFarland, road overseer of distri No. 11 in Furnas county, and that the secti in which plaintiff's alleged land was situat was all in that road district; that the oth defendants were residents of the road d trict, and had been warned out to work the overseer, and that "all of the acts of of these defendants on said day complain of by plaintiff were done under the directio of defendants John V. Anderson and James McFarland, in the discharge of th official duties." There is no allegation of t existence of any highway on the premis in question. A motion was made to have t answer made more definite and specific describing the road, and was overruled, a exception taken. It seems clear that the can be no justification by reason of the ro work if there was no public highway. It equally well established that, if a fact ma rial to an action or defense is not alleged. will be presumed not to exist. Curtis & v. Cutler, 7 Neb. 315; Burlington & M. R. v. York County, 7 Neb. 487; McClure Warner, 16 Neb. 447, 20 N. W. 387; Gibs v. Parlin, 13 Neb. 292, 13 N. W. 405; C cago, R. I. & P. R. Co. v. Shepherd, 39 N 523, 58 N. W. 189. It would seem, therefo that there was, aside from the question as the amount of damages, no issue in this ca except as to the ownership and possession the land claimed by the plaintiff. That iss was not submitted to the jury at all, and t only one actually submitted by the instr tions was the amount of damage, and wheth the point at which it was claimed to ha been done was located in a public highw of Furnas county. Objections were prese ed to both the introduction of evidence a the giving of instructions, and in both seems clear that the learned trial court co mitted error.

As to the second question, we are cited plaintiff to a number of cases in which agr ments and acquiescence in location of bou ary lines are held binding as to the adjoi ing owners, and to establish the line as them. We are not cited to any case whe such agreement or acquiescence is held affect the public right of eminent domai and neither reason nor authority seems indicate why it should. Of course, it is har ly conceivable that the public authorities, offered an equally available road line whe the adjoining proprietors had fixed it, wou litigate for the true line. If, however, it b came necessary or desirable for the pub interest to hold the true line, it is hard see how any agreement of adjoining owne could change it. There is, however, no bri on file for defendant, and, as the case mu be reversed for trial over plaintiff's obje tion upon an issue not raised by the plea

Digitized by Google

ings, it is not thought advisable to pass upon any other question in the case.

It is therefore recommended that the judgment of the trial court be reversed, and the cause remanded.

DAY and KIRKPATRICK, CC., concur.

Reversed and remanded.

BROWN et al. v. COLLINS.

(Supreme Court of Nebraska. Dec. 4, 1901.)

APPEAL—REVIEW—DOCUMENTARY EVIDENCE—MORTGAGE FORECLOSURE.

1. Errors not urged in the briefs will be disregarded.
2. An acknowledged instrument, of a kind permitted to be acknowledged and recorded, is admissible in proof without evidence of the authenticity of the signatures.
3. A judicial record of another state, authenticated as provided in section 414 of the Code of Civil Procedure, is admissible in evidence without further proof that the court from which it comes is one of record.
4. Where there is some evidence tending to support the allegation of no proceeding at law in a foreclosure suit, and no counter showing attempted, decree of foreclosure will be affirmed.

Commissioners' Opinion. Department No. 1. Error to District Court, Lancaster County; Tuttle, Judge.

"Not to be officially reported."

Action by Henry H. Collins against William J. Brown and others. Judgment for plaintiff. Defendants bring error. Affirmed.

Burr & Burr, for plaintiffs in error. S. L. Geisthardt, for defendant in error.

HASTINGS, C. The errors complained of by the defendants in this case are, first, that the decree is too large. No mention is made of this allegation in the briefs filed, and it will not be considered further.

The first error argued is the admission in evidence, without proof of the signatures, of the assignment of a mortgage from the Clark & Leonard Investment Company to A. M. Collins, the testator of the defendant in error. The objection is not well taken. The instrument is duly acknowledged, and is, under our statute, entitled to be read in evidence without further proof. Comp. St. 1901, c. 73, § 13.

The next error urged is the admission in evidence of Exhibit D, an exemplification of a will and its probate, under which the plaintiff below claimed to be the owner of the mortgage. The objection is that the exhibit does not disclose that the orphans' court of the city and county of Philadelphia is a court of record. Section 414 of the Code of Civil Procedure provides that a judgment of another state may be proved by the attestation of the clerk, and the seal of the court annexed, together with a certificate of the judge or presiding magistrate that the attestation is in due form. All of these requisites were complied with in this case, and the objection was properly overruled.

The third error urged is that there was no competent evidence on which to base a decree, because it was not proved that no action at law had been commenced or proceeding had to collect the debt. To this point the only testimony offered was that of the attorney, S. L. Geisthardt, who testified that he was familiar with the debt from its inception, and that no proceedings had been taken or action commenced at law to collect any part of it. It is urged that this is largely hearsay testimony, because the information of the witness seems to have been derived in part from other persons, with whose business he was familiar, and from whom he would have received information of any action on this paper. It was not necessary to produce the testimony of every person who had ever had any charge or control over this paper from its first execution down to the institution of this action, in order to show that no proceedings had been had at law. It was a negative allegation, in support of which some proof was adduced. The facts were as well in the knowledge of defendants as of plaintiff, and no counter showing was attempted. There appears no reason why the finding of the trial court should not be affirmed.

It is therefore recommended that the decree of the district court be affirmed.

DAY and KIRKPATRICK, CC., concur.

Affirmed.

KOHOUT v. CHALOUPKA et al.

(Supreme Court of Nebraska. July 3, 1903.)

BANKRUPTCY—SECURED CREDITOR—CREDITORS' SUIT—INTERVENTION BY TRUSTEE OF BANKRUPT.

1. If a secured creditor of a bankrupt, whose security is insufficient, discloses his security in proving his claim before the referee, he may retain his security, and share in the dividends as to the overplus.
2. The petition of a trustee in bankruptcy, asking to be substituted as party plaintiff in a creditors' bill filed by a creditor of the bankrupt who has filed his claim before the referee in bankruptcy, which does not allege that such creditor has waived his security, is insufficient to entitle the trustee to intervene and be subrogated to the rights of such creditor.
3. Petition examined, and *held* not to state facts sufficient to entitle the petitioner to intervene and prosecute the suit.

(Syllabus by the Court.)

Commissioners' Opinion. Department No. 3. Error to District Court, Saline County; Stubbs, Judge.

Action by Charlotte S. Flint, administratrix, against Frank J. Chaloupka and others. Ben V. Kohout, trustee in bankruptcy, intervened. From the judgment, Kohout brings error. Affirmed.

¶ 1. See Bankruptcy, vol. 6, Cent. Dig. § 505.

Digitized by Google

J. A. Wild and A. N. Dodson, for plaintiff in error. A. S. Sands, for defendant in error.

KIRKPATRICK, C. This proceeding is prosecuted from a judgment of the district court of Saline county sustaining a demurrer to a petition of intervention filed by B. V. Kohout, trustee in bankruptcy of the estate of Frank J. Chaloupka, Sr., in the case of Charlotte S. Flint, administratrix, against Frank F. Chaloupka, Sr., et al. The case named was one in the nature of a creditors' bill pending in the district court of Saline county. The petition there recited that the plaintiff, Charlotte S. Flint, was administratrix of the estate of James Flint, deceased; that on May 12, 1897, she, as such administratrix, recovered a judgment against Frank J. Chaloupka and Joseph F. Chaloupka on a promissory note delivered to James Flint in his lifetime for $1,451; that execution had been issued upon the judgment, and returned nulla bona; and then contained certain allegations as to fraudulent conveyances by the judgment debtors, and asked to have such conveyances set aside, and the property subjected to the payment of her judgment. The judgment debtors and their alleged fraudulent grantees were made defendants in her suit. On September 9, 1901, Kohout filed his petition of intervention, alleging his appointment and qualification as trustee in bankruptcy of the estate of Frank J. Chaloupka, who had been adjudged a bankrupt some time in 1899. His petition recited the pendency in the district court of Saline county of the action by Charlotte Flint, administratrix, plaintiff, against Chaloupka, and other defendants, the purpose of which was "to recover possession of the following described real estate," describing the property mentioned in the petition in that action, and then contained the following paragraph: "Your petitioner shows to the court that the action was begun before bankruptcy proceedings were instituted, and the plaintiff herein [the administratrix] has filed her claim, and said claim was allowed by the referee in bankruptcy. Your petitioner is entitled, as trustee, to whatever interest the plaintiff herein may have in or to the above-described premises, and is entitled to the immediate possession of the same. Wherefore your petitioner prays that he may be a party plaintiff in said action, and permitted to prosecute the same." The defendants named demurred to the trustee's petition for the reasons (1) that the court has no jurisdiction of the subject-matter; and (2) because the petition did not state a cause of action against the defendants, or any of them, in favor of the said intervener. This demurrer was sustained, and the question presented in brief of plaintiff in error is whether this rule is correct. There is no brief by defendants in error.

We are of opinion that the judgment of the trial court must be affirmed. The record doe not show that the administratrix, plaintiff i the creditors' bill, pleaded to the petition c the trustee; and she is not a party to thi error proceeding, the only defendants in er ror being the demurrants, who were defend ants in the suit brought by the adminis tratrix. The rule invoked by plaintiff in er ror to sustain his position is, of course, we settled, namely, that a creditor of a bank rupt may either directly or indirectly waiv his security, and prove his claim as uns cured; as where a creditor, by judgmen execution, attachment, or creditor's sui proves his claim without disclosing his lie in which event he will not subsequently b permitted to enforce it, but will be deeme to have waived it. But in this connection is important to keep in mind that a secure creditor is not, under the bankruptcy lav forced to the alternative of either relyin wholly on his security, or, abandoning ths prove his claim with other creditors. It i we think, settled by a number of authorit tive adjudications that a creditor who h security for his debt, if that security is i sufficient, may prove his claim for the ove plus, and does not abandon his security if l makes a full disclosure of it and the valu thereof. Under such circumstances he ma vote upon the choice of an assignee upo such overplus. In re Bolton, Fed. Cas. N 1,614. So, where a creditor proves for th full amount of his claim, specifying the s curities held by him for the debt, he ma participate in the dividends to the extent th his claim is greater than the value of th security.

Recurring now to the language of the tru tee's petition, it is there said "that the plai tiff herein has filed her claim, and said clai was allowed by the referee in bankruptcy Clearly, the mere allegation of the filing her claim and its allowance by the refer is not sufficient to show that she waived h security, as she may have filed her clai without waiving her security. For all th appears from the trustee's petition, she ma have appeared in the bankruptcy proceeding as she had a right to do, only for the purpo of participating to the extent that her clai was greater than her security. The alleg tion that by filing her claim she waived h security was a material one, and the on presumption that may be indulged from i absence is that she did not waive her s curity. Humphries v. Spafford, 14 Neb. 48 16 N. W. 911.

It would seem to be a matter of chief co cern to the plaintiff in the creditors' bill su whether the trustee in bankruptcy shou be permitted to intervene, and be substitute as party plaintiff. But the only questio before us is whether the ruling of the tri court upon the demurrer interposed by th defendants in that suit is correct. The o question raised by the demurrer was whet er the petition disclosed a right in the tru

Digitized by Google

tee to prosecute the suit against them. They had manifest right to raise this question. If the facts alleged were insufficient to entitle him to be made party plaintiff by substitution, the defendants against whom the suit was to be prosecuted were entitled to raise that question. It is always open to the defendant to question the right of the plaintiff to sue. The right of the intervening trustee to prosecute the suit depended upon whether or not the plaintiff had in fact waived her security, the lien by her procured by the filing of her bill. In this material respect we have already found the petition insufficient.

It follows that the ruling of the trial court should be affirmed, and it is recommended that the same be done.

DUFFIE and POUND, CC., concur.

PER CURIAM. For the reasons stated in the foregoing opinion, the judgment of the trial court is affirmed.

HEAGNEY v. J. I. CASE THRESHING MACH. CO.

(Supreme Court of Nebraska. July 3, 1903.)

REPLEVIN—DEMAND—SALE—CONTRACT OF WARRANTY—NOTICE OF DEFECTS—BREACH OF WARRANTY.

1. A demand of possession before suit is not necessary to maintain replevin, where the defendant contests the case on the merits.

2. Where a contract of warranty provides for notice of defects in the article sold to be given to the vendor, and that "any assistance rendered by the company, its agents or servants, in operating or in remedying any actual or alleged defect, either before or after the ten-days trial, shall in no case be deemed a waiver of or any excuse for any failure of the purchaser to fully keep and perform the conditions of this warranty," *held*, that notice to an agent of the company of defects in a machine, obtained from assisting in setting it up and trying to make it work, was not such notice as complied with the conditions of the warranty.

3. Contract of warranty examined, and *held* that, on breach thereof by the vendor and warrantor, the only relief allowed the vendee was to return the article sold and reclaim the consideration.

Commissioners' Opinion. Department No. 3. Error to District Court, York County; Sornborger, Judge.

"Not to be officially reported."

Action by the J. I. Case Threshing Machine Company against Patrick Heagney. Judgment for plaintiff, and defendant brings error. Affirmed.

George B. France and Meeker & Wray, for plaintiff in error. Hainer & Smith, for defendant in error.

DUFFIE, C. This case comes here on petition in error from the York county district court. The action is one of replevin, brought by the defendant in error to recover possession of a threshing machine outfit. The facts, as we gather them from the record, are as follows: Heagney, the plaintiff in error, was the owner of a threshing outfit, consisting of a Nichols & Shepard engine, Hawkeye feeder, Nichols & Shepard separator, and one mounted tank and telescope weigher. He desired to discard his old separator, and purchased from the J. I. Case Company (hereafter called "Company") one of its separators and wind stackers. A printed copy of the contract of purchase and of the warranty made by the company appears in the bill of exceptions, and will be hereafter referred to. The price of the new separator and the wind stacker was $600, and was evidenced by notes and a chattel mortgage made to the company upon the property purchased, and also upon parts of the old machine. The first note, for $10, matured November 1, 1901; and the mortgage contained a condition that, if any of the sums of money secured thereby were not paid when due, the mortgagee might declare the whole sum due, and take immediate possession of the mortgaged property. The warranty contained, among others, the following conditions: "Said machinery is purchased upon and subject to the following mutual and dependent conditions, namely: It is warranted to be made of good material, and durable with good care, to do as good work as any made in the United States, if properly operated by competent persons, and the printed rules and directions of the manufacturers intelligently followed. If purchasers, by so doing, after trial of ten days, are unable to make the same operate well, written notice shall at once be given to J. I. Case T. M. Company at Racine, Wis., and also to the agent from whom purchased, stating wherein it fails to fulfill the warranty, and reasonable time shall be given to said company to send a competent person to remedy the difficulty, the purchaser rendering necessary and friendly assistance; said company reserving the right to replace any defective part or parts, and if then the machinery cannot be made to fill the warranty, the part that fails is to be returned by the purchaser, free of charge, to the place where received, and another substituted therefor that shall fill the warranty, or the notes and money for such part immediately returned and no further claim made on the company. Failure so to make such trial or to give such notice, in any respect, shall be conclusive evidence of due fulfillment of warranty on the part of said company and that the machinery is satisfactory to the purchasers, and any assistance rendered by the company, its agents or servants, in operating or remedying any actual or alleged defect, either before or after the ten-days trial, shall in no case be deemed any waiver of or excuse for any failure of the purchaser to fully keep and perform the conditions of this warranty. * * * If any part of the machinery (excepting belting, which is not warranted) fails, from defect of material, while this warranty is in force, the company has the option to repa'

Digitized by Google

or replace the same, on presentation of the defective part or parts, but deficiency or defect in any piece shall not condemn other parts, and purchaser expressly waives all claim for damages on account of the nonperformance of any of the above-described machinery." The separator and stacker were purchased at Lincoln through H. H. Pugh, the sales agent of the company at that place, and the machinery was shipped to Fairmont, Neb., and delivered to Heagney on July 30, 1901, on which day the notes and mortgage securing the same bear date. Heagney used the machinery until September 9, 1901; the evidence being undisputed that 13 days' actual threshing was done with it. Under date of September 9, 1901, one Sloan, an attorney at Geneva, wrote the company (directing his letter to Lincoln, Neb.), stating that the machine did not work satisfactorily, and also complaining that the company had not sold his old machine; that he now had two machines on hand—and asking the company to take back the new machine and return his papers. The letter also stated "that unless you will notify him where you prefer the machine to be left he will bring it and leave it at the office of Mr. Talmage or at the depot subject to your order." One Ed. Coleman, general agent of the company, replied to this letter; stating, in substance, that it was the first intimation received by the company of any dissatisfaction on the part of Heagney, and directing attention to the contract of sale entered into between the parties, and declining to take back the machine. Heagney kept possession of the machine, and did not return or offer to return it to the company or any of its agents. In November, about the time of the maturity of the first note, and again in December, some time after it fell due, one Tolman, an agent of the company, called on Heagney and demanded payment, which was refused by Heagney; and shortly afterward the company brought replevin for the property covered by its chattel mortgage, and took possession of the same under the writ. The answer of the defendant is a general denial. On a trial of the case the company called Heagney as a witness, and identified the notes and mortgage, introduced these papers in evidence, and rested; and thereupon Heagney requested the court to direct a verdict for him, which motion was overruled.

It is now insisted that the court should have instructed the jury to return a verdict for the defendant, for the reason that it was not shown that anything was due upon the notes secured by the mortgage when the action was commenced. At the time the action was commenced the first note had matured by its terms. The plaintiff had possession thereof, and no claim of payment was made by the defendant. Prima facie, we think that these facts were sufficient to show nonpayment of the note; but, conceding that the burden was on the company to show by direct and positive evidence that the first note had not been paid at the date of commencing suit, the plaintiff in error cannot now take advantage of that fact, for the reason that it was not alleged in his motion for a new trial.

It is further insisted by plaintiff in error that the plaintiff's petition does not state a cause of action, as it fails to allege a demand for the possession of the property prior to commencing suit. People's F. & C. Co. v. Crosby, 57 Neb. 282, 77 N. W. 658, 73 Am. St. Rep. 504, is cited in support of this position. An examination of that case will show that it has no application to the facts in this case. The sale in that case was evidenced by a written contract in the form of a lease, with an option to purchase; the vendor reserving the title as security for the purchase money. A large part of the purchase price had been paid, and the court said: "Where goods have been sold under a contract reserving title in the vendor as security for the purchase money, which is payable in installments, where the vendee has paid a large part of the purchase money, and the vendor has accepted payments after the time the whole became due, the vendor cannot retake the property without a previous demand for the unpaid money. The rule whereby a demand is unnecessary to maintain replevin, where the defendant contests the case on the merits, does not apply to cases where a demand is necessary, not merely as a basis for asserting the remedy, but to vest in the plaintiff a right of possession, as where the plaintiff's right depends upon a condition which is broken only by demand and refusal." This extract from the opinion makes plain the difference between the two cases.

It is further urged that the petition does not state a cause of action, because there is no allegation that the debt secured remains unpaid. It is evident that counsel have overlooked the following allegation of the petition: "That one of the notes hereinbefore mentioned and described, and secured by said chattel mortgage, became due and payable on the 1st day of November, 1901, and that the same has not been paid, and the defendant refuses to pay the same; and the plaintiff does now elect to treat all of said indebtedness as due and payable, and hereby declares the same due and payable."

Exceptions were taken to the ruling of the court upon its refusal to allow evidence offered by the defendant below. Some of this evidence went to conversations with alleged agents of the company, and some to proof of damages sustained by Heagney because of the claimed failure of the machine to do proper work. The contract of sale contained a stipulation as follows: "Agents have no authority to waive, alter or enlarge this contract or to make any new or substituted or different contract or warranty." Whether or not a general agent of the com-

Digitized by Google

pany, having general authority in the transaction of its business, might waive or modify the conditions of the contract, it is not necessary to inquire. No offer was made tending to show a waiver or modification of any of the conditions of the contract, coming from a general agent of the company; and no special or local agent could, in the face of the contract itself, modify or waive any of its terms. The claim that Heagney was entitled to prove damages, and to offset them against his notes, is met by the provisions of the contract itself, which specially provides against such a proceeding.

It is further urged that there was no evidence of any consideration for the notes and mortgage. Aside from the presumption that obtains in favor of a consideration for paper of this character, Heagney admitted upon the trial that he gave the notes and mortgage to evidence the purchase price of the machine bought from the company. He further testified that the separator and stacker, "in the condition in which it was, was probably worth a couple of hundred dollars," and "if it were all right it would have been worth, probably, what I gave for it." The evidence is uncontradicted that Pugh, the agent who sold the machine to Heagney, assisted in putting it up and in running it a part of the first day, and it was shown by the evidence of Heagney that some time in the afternoon he said: "I am going back to town. I cannot make it work." And it is now insisted that this was notice sufficient to the company that the machine was defective in its operation, and that Pugh's knowledge of its defective workings obviated the necessity of any further notice to the company on the part of Heagney. Under the provisions of the warranty, we are not prepared to concede this position. The warranty contains the following clause: "And any assistance rendered by the company, its agents or servants, in operating or in remedying any actual or alleged defect, either before or after the ten-days trial, shall in no case be deemed any waiver of or excuse for any failure of the purchaser to fully keep and perform the conditions of this warranty." Conceding, however, for the purposes of the case, that notice to Pugh of defects in the machine, gained from his personal observations of its workings, was sufficient notice to the company, still Heagney has not taken advantage of the conditions of his contract of warranty by returning the machine. If we admit that the company had such notice as the warranty required of the defective workings of the machine, and failed to remedy the defects within a reasonable time after such notice, the remedy of Heagney was to return the machine to the place where the same was purchased, and demand his notes and mortgage, and this he has failed to do. By the contract of purchase the parties undertook to, and did, fix absolutely not only the terms and conditions on which the company would part with the possession of the machine, but also the consequences of a failure on the part of either to comply with the contract; and, where the contract of warranty contains limitations, these limitations will be enforced. Sycamore Marsh Harv. Co. v. Sturm, 13 Neb. 215, 13 N. W. 202; Clark v. Deering, 29 Neb. 293, 45 N. W. 456. In Davis v. Gosser, 41 Kan. 414, 21 Pac. 240, it was held: "Where a threshing machine was sold upon a written contract, one of the conditions contained therein being that if the machine did not do good work the purchaser should return it to the place where received, before the purchaser can recover damages for breach of warranty he must return the machine, or show a waiver of such requirement by the seller."

The defendant below apparently tried his case upon two theories, entirely inconsistent one with the other: First, that the contract of sale had been rescinded, and that no recovery could be had on his notes, because of such rescission; and, second, that he was entitled to damages on an executed contract for the sale of the machine. It is hardly necessary to observe that the law could allow him no damages growing out of a contract which he himself had rescinded, or that by the terms of his contract he could rescind only by returning the machine to the agent from whom he purchased, and the contract, which he signed with full knowledge of all its conditions contains this stipulation: "And the purchaser expressly waives all claim for damages on account of the nonperformance of any of the above-described machinery." The contract appears to have been entered into with a full understanding of all its terms and conditions, and the court has no power to alter or change it in any respect, or to relieve either of the parties from full performance. The plaintiff in error has barred his right to claim damage for failure of the machine to do good work, and has failed to take advantage of the right given him to rescind the contract.

We discover no reversible error in the action of the district court, and recommend an affirmance of its judgment.

KIRKPATRICK and POUND, CC., concur.

PER CURIAM. The conclusions reached by the Commissioners are approved, and, it appearing that the adoption of the recommendations made will result in a right decision of the cause, it is ordered that the judgment of the district court be affirmed.

Digitized by Google

GALLENTINE v. CUMMINGS.*

(Supreme Court of Nebraska. July 3, 1903.)

FORECLOSURE—NOTICE OF SALE—CONFIRMATION—DECREE.

1. It is not essential that a notice of sale under a decree of foreclosure should state the amount due on the decree.

2. It is not a valid objection to a confirmation of such sale that a copy of the decree was not attached to or incorporated in the order of sale.

3. The signature of the presiding judge to a decree or the record is not essential to the validity of the decree.

Commissioners' Opinion. Department No. 2. Appeal from District Court, Buffalo County; Sullivan, Judge.

"Not to be officially reported."

Action by Joseph J. Gallentine against Archibald Cummings. Judgment for plaintiff, and defendant appeals. Affirmed.

B. O. Hostetler, for appellant.

ALBERT, C. This is an appeal from an order confirming a sale made in pursuance of a decree of foreclosure. Of the many objections lodged against the confirmation of the sale but three are relied upon in this court, and we shall consider them in the order in which they are presented in the appellant's brief.

1. The first objection is that the notice of sale does not contain a statement of the amount due on the decree. The objection was properly overruled. It is not essential to the validity of a notice of sale under the decree of foreclosure that it state the amount of the decree. Stratton v. Reisdorph, 35 Neb. 314, 53 N. W. 136. The appellant cites Cook v. Foster (Mich.) 55 N. W. 1019, as indicating a contrary doctrine. That case is not in point, because there is an express statutory provision in that state which requires the amount of the decree to be stated in the notice. No such provision exists in this state.

2. The second objection is that no certified copy of the decree was attached to the order of sale. This objection is also without merit. A decree of foreclosure may be executed without an order of sale. The decree itself is the authority to the officer to make the sale. Rector v. Rotton, 3 Neb. 171; Fried v. Stone, 14 Neb. 398, 15 N. W. 698; Id., 14 Neb. 402, 15 N. W. 700; Jarrett v. Hoover, 54 Neb. 65, 74 N. W. 429; Baldwin v. Burt, 54 Neb. 290, 74 N. W. 594; Wagenknecht v. Seeley, 55 Neb. 770, 76 N. W. 473. We do not overlook Loan & Trust Co. v. Hamer, 40 Neb. 281, 58 N. W. 695, wherein this court said that it would seem to be the better practice to embody in or attach to the order of sale a copy of the decree. That is a mere recommendation for the convenience of the officer making the sale. So long as the sale is made in accordance with the terms of the decree, it is no ground for complaint th the officer did not take all the precautions might have taken to insure that result.

3. The last objection is that the decree h never been signed by the presiding judg The appellant relies on Code Civ. Proc. § 44 which directs that the records shall be e amined by the presiding judge, and, if fou correct, be signed by him. But this cou in Fouts v. Mann, 15 Neb. 172, 18 N. W. 6 held that the failure of the judge to sign decree of foreclosure or the record does n affect the validity of the decree. To t same effect is Scott v. Rohman, 43 Neb. 61 62 N. W. 46, 47 Am. St. Rep. 767, and t numerous authorities there cited in suppo of the proposition.

The foregoing disposes of all the objectio relied upon for a reversal of the order confirmation. None of them are well foun ed, and we recommend that the order of t district court confirming the sale be affirme

BARNES and GLANVILLE, CC., concu

PER CURIAM. The conclusions reach by the Commissioners are approved, and, appearing that the adoption of the reco mendations made will result in a right d cision of the cause, it is ordered that t judgment of the district court be affirmed.

¶ 1. See Mortgages, vol. 35, Cent. Dig. § 1512.

*Rehearing denied October 7, 1903.

HORN v. WILLIAMSON et al.

(Supreme Court of Nebraska. July 3, 1903.

HIGHWAY—ESTABLISHMENT—PRESCRIPTION

1. Proceedings of the county board of coun commissioners examined, and *held* insufficie to establish a consent road.

2. Evidence examined, and *held* insufficie to show the establishment of a public road prescription.

Commissioners' Opinion. Department N 3. Appeal from District Court, Boone Cou ty; Paul, Judge.

"Not to be officially reported."

Action by George P. Horn against Ze Williamson and others. Judgment for pla tiff, and defendants appeal. Affirmed.

E. C. Spear and H. C. Vail, for appellan R. F. Williams, for appellee.

KIRKPATRICK, C. This is an appe brought to this court by Zena A. Willia and others from a judgment of the distri court of Boone county perpetually enjoini appellants from tearing down the fence appellee, and opening and working a pub road along the west line of his land in sa county. It is disclosed by the pleadings th appellee, George P. Horn, is the owner a in possession of the southwest quarter section 14, town 18 N., of range 5 W., Boone county; that appellants Zena A. W liams, Barsly Hubbell, and James A. Smi are the commissioners; that David We brook is one of the road supervisors of Boo county; that appellee had constructed a

Digitized by Google

for many years had maintained a fence along the west line of his land; that appellant Westbrook, acting as road supervisor, had, under the direction of the other appellants as county commissioners, served notice upon appellee to tear down and remove the fence from his west line, and that, if he failed so to do, Westbrook, as road supervisor, would himself remove the fence, and that the expense of so doing would be collected from appellee. It is further disclosed that Westbrook, as supervisor, was about to tear down the fence and remove it, and would have done so, had he not been temporarily enjoined from doing so by the county judge of Boone county. Appellants attempted to justify the proposed action upon certain proceedings claimed to have been had by the county commissioners some time in the year 1885, which it is claimed amounted to the laying out and establishing of a public road along the section line in question. The only action ever taken in the matter by the board of county commissioners is disclosed by the record of the commissioners, which is in the language following: "Before the board of county commissioners of said county, May term, 1885, at a regular meeting of the county commissioners of said county held at Albion on the 1st day of May, 1885. Present: Peter J. Files and J. J. Young, County Commissioners, and John Peters, county clerk—the following among other proceedings were had: Come now William Floy and others, and present a petition to examine and to locate a county road, called 'Road No. 168,' which said petition is in the words and figures, following, to wit," etc. The commissioners' proceedings fail to show any action of any kind taken on this petition, but it does appear that the road was platted by the county clerk upon the road record. The road petition seems to be in the ordinary form, and is signed by a number of petitioners, and describes the proposed road; the last three words of the petition being as follows: "Located by consent." The record fails to disclose that the road was ever viewed; that any notice of the laying out of the proposed road was ever given; that any claims for damages were ever filed, or any appraisement made, or any damages ever paid. The petition seems to have been signed by appellee, but it is clearly established that many of the owners of the land along the proposed road, and whose land must have been taken, did not sign the petition. The petition was clearly insufficient to confer jurisdiction upon the county board to lay out and establish a consent road, and it moreover appears that no action was ever taken by the board in the matter of the laying out and establishing of the road. This want of action by the county board is apparently accounted for by the testimony of appellee and others, from which it appears that an agreement was entered into between the county and certain of the petitioners, among whom was appellee, that the proposed section-line road extending north and south along the west line of section 14, the south half of which was owned by appellee, should be abandoned, and in place thereof, a consent road should be laid out and established, running north and south through the middle of sections 14 and 15, and thence south to the county line, one-half mile east of the location of the road now contended for; and this seems to be corroborated by the fact that a consent road was laid out and established running north and south through the sections mentioned, and through the middle of appellee's land, on the half-section line. This road has been worked by the commissioners, is used continuously, and seems, from the testimony, to be amply sufficient to supply the wants of the traveling public in that portion of the county.

Again, it is contended by appellants that even though the action of the county commissioners was ineffectual to lay out and establish a public road along the section line, as contended, there has been a traveled road along the section line for a sufficient length of time to establish a road by prescription This contention seems to be wholly without merit. The testimony establishes, almost beyond dispute, as found by the trial court, that there has been no travel along the line mentioned. It is shown that for a considerable portion of the distance along the section line the land is so rough and broken as to be wholly impassable, and that what little travel passes along near the line follows the cañons around there, and the farms on either side, without regard to the section line. It is further shown that appellee has maintained his fence along that line for 16 years.

The judgment of the trial court seems to be right, and it is recommended that the same be affirmed.

DUFFIE and POUND, CC., concur.

PER CURIAM. The conclusions reached by the Commissioners are approved, and, it appearing that the adoption of the recommendations made will result in a right decision of the cause, it is ordered that the judgment of the district court be affirmed.

HARE v. WINTERER et al.

(Supreme Court of Nebraska. Nov. 20, 1901.)

MORTGAGE—FORECLOSURE—USURY—PLEADING—EVIDENCE.

1. Allegation that defendants borrowed $300, and agreed to pay 10 per cent. per annum interest, and in addition, by agreement with plaintiff, a bonus or premium of $14, which amount was taken by plaintiff out of the sum loaned, and $286, and no more, paid by him to plaintiff, and said sum of $14 was so paid in excess of the legal rate of 10 per cent. per annum for the use of said money, is a sufficient plea of usury to a petition to foreclose a mortgage securing a note for $300, and bearing 10 per cent. per annum interest.

Digitized by Google

2. In the absence of special circumstances requiring a different plea, it is sufficient to allege an agreement as made by a party, in order to introduce proof that it was made by his duly authorized agent.

3. Evidence *held* not to establish any authority on the part of the alleged agent to make any loan for plaintiff to defendant. nor any participation in any usurious agreement on the part of plaintiff himself.

Commissioners' Opinion. Department No. 1. Appeal from District Court, Deuel County; Grimes, Judge.

"Not to be officially reported."

Action by William W. Hare against Jacob H. Winterer and others. Judgment for defendants, and plaintiff appeals. Reversed.

Hoagland & Hoagland, for appellant. Wilcox & Halligan and James Harvey Hooper, for appellees.

HASTINGS, C. The plaintiff in this case complains first that defendants' answer does not set up the plea of usury, because "it fails to state with whom the agreement for usurious interest was made, when it was made, where made, and the facts which make the transaction usurious." If this were true, beyond all doubt, there would be no defense. The answer, however, states that, at the time the $300 was borrowed from the plaintiff, it was agreed to pay 10 per cent. interest thereon, and that the plaintiff, in addition to interest at the rate of 10 per cent. per annum, demanded, contracted for, received, and reserved a bonus of $14, and took it from the amount agreed to be loaned, and the defendants received from plaintiff the sum of $286, and no more, and that the sum of $14 was demanded, contracted for, received, and reserved by the plaintiff in excess of the legal rate (10 per cent. per annum) for the use of said money. This would seem to cover "the facts which make the transaction usurious." Time and place are sufficiently shown by reference to plaintiff's own petition.

It is next objected that no mention of agency in the transaction is made by the answer, and therefore proof of agency for the plaintiff on the part of one Van Marter, through whom the money was paid to the defendants, is inadmissible. Merchants' Bank v. McConiga, 8 Neb. 245, is cited to this proposition, and Van Santford's Pleadings. The citations do not seem to sustain the contention. The case in the 8th Nebraska is one where the evidence fails to sustain an express plea of agency. The true rule is that an allegation of contract with a party is supported by proof that the contract was made with his authorized agent. Sherman v. N. Y. Cent. Ry. Co., 22 Barb. 239; Abbott's Trial Brief on Pleading, p. 128, citing, among other cases, Bank of Metropolis v. Guttschlick, 14 Pet. 19, 10 L. Ed. 335.

It is not disputed that Van Marter received $14 out of the loan. It remains sim ply to be considered whether or not he wa such an agent, and the circumstances suc that this was an additional exaction for th use of the money, and rendered the transa tion usurious. It is earnestly contended tha the appellant knew nothing about any suc payment; that he had no funds in the hand of this alleged agent; that, on his approv of the application, he sent a draft for th full amount, payable to the defendant's o der; that the defendant cashed this drai and out of it paid this small sum voluntari to Van Marter in compensation for his ser ices. Van Marter is dead, and the case res upon the testimony of the plaintiff and th defendant Jacob H. Winterer. Winter swears: That, when he borrowed this mone Van Marter was living on the same sectio with him, farming, raising stock, and loa ing money. That he applied for a loan, an was told he could have it, and arranged f one of $300, and received a draft for $3 from Van Marter, which is acknowledged be one sent by plaintiff. It was paid to th defendant at Ogallala in Van Marter's a sence. An agreement had been made to pa 8 per cent. for getting the loan, and, the ne or second day after defendant cashed th draft, he paid this, with $5 additional for a abstract and expenses, to Van Marter. Th he did not employ Van Marter as agent, b only applied to him for money, and he fu nished it on those terms. Van Marter stat he was loaning money for an old friend an neighbor of his in New York—Mr. Hare, th plaintiff. Van Marter also gave notice of m turity of interest coupons on the loan up the time of his death. It appears that th note and mortgage were drawn by Van Ma ter. Plaintiff testifies: That he loaned $3 to the defendants. That he was then at Gr tan, Thompson county, N. Y., and sent th money by a draft payable to the order J. Winterer. That he sent the draft to Va Marter, with directions to deliver it wh defendants executed note and mortgage, an produced an abstract of title. Van Mart had applied for the loan for defendants, an had recommended it, and had been give no other authority. Van Marter was at th time a farmer in Deuel Co., Neb., living ne defendants. He had formerly lived at Gr tan, N. Y. That the plaintiff never agre to receive more than 10 per cent. on th loan. That he did not authorize Van Mart or any one else to collect any sum as bonus or premium. That he never receiv from Van Marter or any one else any su whatever as a bonus or premium on th loan. That he had no knowledge of Va Marter's receiving anything. That he wro to Van Marter to deliver the $300, and d not direct or authorize him to withhold an part of it. That Van Marter never had an of plaintiff's money to loan, nor any autho ity to accept or reject loans, and plaint never solicited any loans, and rejected man

¶ 2. See Principal and Agent, vol. 40, Cent. Dig. §§ 713, 716.

Digitized by Google

applications from Van Marter. Plaintiff made about 25 loans in Deuel and Keith counties, Neb. He visited the country himself before any loans were taken, and himself examined the lands at first. That Van Marter reported the quality of the lands which plaintiff himself had not examined. That Van Marter collected the interest on most of the loans, and remitted it up to the time of his death, and represented a good many, but not all, of plaintiff's debtors in Nebraska. Plaintiff professes to have no letters from Van Marter relating to this loan, and no application for it. He does not know with certainty whether one was made. It does not seem that this evidence is sufficient to show a usurious agreement on the part of the plaintiff in the making of this loan. It is true that ever since Philo v. Butterfield, 3 Neb. 256, it has been the rule in this state that one who places money in the hands of an agent to be loaned is responsible for any exaction of premium or bonus which that agent may make in loaning the money, even though the principal himself has no knowledge of it, and that such premium or bonus, if in excess of the amount of legal interest, will taint the transaction with usury, although the real loaner is ignorant of the exaction, and did not authorize it. In this case, however, it will be seen that, so far as the evidence disclosed, Van Marter never had any funds of the plaintiff in his hands; had no authority to make any agreement or arrangement with regard to loans; did nothing, in fact, except forward the application and recommend the security offered. He seems to have interested himself in the collection of interest on these loans after they were made, but, so far as the evidence in this case goes, was never even agent for the collection of any money, or authorized to receive any, on behalf of plaintiff. The case of Hare v. Hooper, 56 Neb. 480, 76 N. W. 1055, is cited by appellees, but the evidence recited in that case is very different from that before us in this one. Courtnay v. Price, 12 Neb. 188, is also appealed to. There is no analogy between the evidence stated in that case and what has just been recited. The money there was shown to be absolutely left with the agent to be loaned at his discretion. Cheney v. Eberhardt, 8 Neb. 423, 1 N. W. 197, is also cited. The evidence of agency in that case, too, was something far stronger than anything we have here. Cheney had had the money turned over to him, and had bound himself by a contract to either return it or procure the securities which were taken; and all the notes were made payable at Cheney's place of business, several hundred miles from the residence of the loaner. Olmsted v. New England Mortgage Security Co., 11 Neb. 487, 9 N. W. 650, is another case relied upon by appellees. In this case the Corbin Banking Company was regularly and systematically employed, over a wide range of territory, in procuring mortgages payable to defendant in error, and the evidence was held ample to establish that it must have been with the knowledge and collusion of the Mortgage Security Company, and it was therefore bound by the usurious transactions of the banking company. Anderson v. Vallery, 39 Neb. 626, 58 N. W. 191, is a case also cited by appellees, in which there was no dispute as to the question of agency, but the contest was over the question whether a certain payment had been made; and, if so, whether it was made in consideration of the forbearance by the agent on the principal's debt. New England Mortgage Security Co. v. Hendrickson, 13 Neb. 157, 12 N. W. 916, is also cited. This case presents the same facts as to agency which were disclosed in Olmsted v. New England Mortgage Security Co., supra. None of these cases are in contravention of Philo v. Butterfield, and nearly all of them cite that case. The proof of agency in Philo v. Butterfield was held insufficient, and it was decidedly stronger, so far as appears from the report, than we have here. The alleged agent in that case had previously made loans for the same principal. He had made a personal trip to Des Moines, and had himself procured the money which was loaned, and $300 additional, which, so far as appears, was turned over to him for the same purpose. In the present case the alleged agent was not intrusted with any money; it was remitted directly to the borrower; the borrower himself cashed the draft; and the only ground of usury is that after doing so he carried out a previously made agreement with Van Marter to pay the latter $9 for getting the loan, and also paid $5 expenses, which he does not now dispute. It would seem that he must have known on getting the draft that it was intended and expected by his creditor in New York that he should have the whole $300, and be himself responsible for its use and employment; and, having obtained it on those terms, it would seem highly inequitable to permit him now, because he paid out this $14 to Van Marter without plaintiff's direction, or even knowledge, to charge plaintiff with usury in the transaction. In Secor v. Patterson, 114 Mich. 37, 72 N. W. 9, a much stronger case of exaction on the part of the loan broker than the one we have before us was held to create no taint of usury, so far as the loaner was concerned.

It is therefore recommended that the case be reversed, with instructions to enter a decree for the amount of $300, and interest at 10 per cent. per annum; allowing defendants credit for the sum of $7 claimed in their answer.

DAY and KIRKPATRICK, CC., concur.

Reversed, with directions.

Digitized by Google

TAYLOR v. HARLE-HAAS DRUG CO.

(Supreme Court of Nebraska. July 3, 1903.)

REPLEVIN—MORTGAGEE IN POSSESSION—CHATTEL MORTGAGE—VALIDITY.

1. An allegation of possession under a chattel mortgage by agreement with the mortgagor renders unnecessary any allegation of demand of payment of demand notes secured by the mortgage in order to show the mortgagee's right of possession.

2. The open and admitted inclusion of a small claim on behalf of another creditor in a chattel mortgage given to secure bona fide indebtedness will not of itself render such mortgage and possession fraudulent and unlawful as against attaching creditors.

3. Evidence *held* to support finding that the drug company was in actual possession under its mortgage when the attachments were levied.

Commissioners' Opinion. Department No. 1. Error to District Court, Hall County; Paul, Judge.

Action by the Harle-Haas Drug Company against S. U. Taylor. Judgment for plaintiff. Defendant brings error. Affirmed.

Harrison & Pearne, for plaintiff in error. W. A. Prince and Ashton & Mayer, for defendant in error.

HASTINGS, C. This action was a replevin suit, brought by the drug company, plaintiff below, claiming as mortgagee in possession, to recover a quantity of drugs which the sheriff had taken under attachment against one D. E. Wilcox. On June 21st, Wilcox, who had a drug store in Wood River, gave a chattel mortgage to the drug company to secure the payment of two notes —one for $268.60, representing an amount due from Wilcox to the drug company, and one for $15.75, drawn in favor of the drug company, but in reality in settlement of an account of the Nebraska Mercantile Company. These two claims were presented at the same time, and by the same attorney, and the chattel mortgage was given to secure both of them in the drug company's name. The attorney then ostensibly put in possession the witness D. D. O'Kane on behalf of the mortgagee, and so left the matter with the agreement that O'Kane was to hold possession, and no proceedings in foreclosure were to be instituted for 10 days, by which time Wilcox claimed that he could get aid to liquidate the amounts due under the mortgage. The notes were payable on demand. The drug company's attorney, Mr. Ashton, says that he made demand at once, took possession, and delivered such possession, with Wilcox's assent, to O'Kane; that Wilcox objected to O'Kane's not being a registered pharmacist, and it was finally agreed that O'Kane should have possession and control, but that Wilcox should remain in attendance as pharmacist. June 27th the sheriff levied two writs of attachment—one for E. E. Bruce & Co., and the other for Jerry Bowen, or Jerry Bowen & Co.—on the goods in question. Almost immediately Wilco seems to have filed a petition in voluntar bankruptcy, and on July 10th he was ad judged a bankrupt, and some time in Augus the goods which had been levied upon, an were still retained by the sheriff, were se off to him as exempt. In a day or two afte such allowance of exemptions by the truste in bankruptcy, the drug company replevie the goods from the sheriff in the count court of Hall county. A trial was had i that court, and a finding entered for th plaintiff. An appeal was taken, another tri had in the district court, resulting in anothe judgment for the plaintiff, rendered after trial to the court, a jury being waive From that judgment the sheriff brings erro and urges in brief and argument that th plaintiff's petition and affidavit failed to di close a cause of action, because plaintiff claim of ownership was by a chattel mor gage to secure notes payable on demand, an neither petition nor affidavit contained an allegation that demand had been made, an therefore it is claimed that the notes were no due. The petition, however, and affidavi both allege that the notes were due, and als allege that the property had been by th plaintiff reduced to possession by agreemen with Wilcox.

It seems clear that, even if the allegatio that the notes were past due should be trea ed as a legal conclusion, the allegation th the property had been reduced to possessio by the plaintiff and was in plaintiff's posse sion at the time the officer levied upon would cure any question as to plaintiff right of possession because the mortgage ha not matured. The only objection made t the sufficiency of the petition in this case after the judgment. It does not appear t have been made at the trial in any wa whatever, and defendant's pleading was general denial. Under such circumstances would seem that the allegation that the note were past due and unpaid should be held su ficient. If defendant desired an express all gation as to demand, it should have con plained by way of motion.

It is also complained that the chattel mor gage was given to secure the payment of tw distinct debts due to different parties; bu the notes, like the mortgage itself, were i favor only of the plaintiff. It is claimed th this constituted a secret trust in favor of th undisclosed creditor, the Nebraska Mercan tile Company, and rendered the mortgag void, under the ruling announced in Stewar v. Stewart, 36 Neb. 559, 54 N. W. 828. Stew art v. Stewart does not seem to us applicabl to the present case. In Stewart v. Stewar the trusteeship of the German Bank wa denied, and an endeavor made to claim th the whole indebtedness represented by th mortgage was the bank's. The evidence wa not held sufficient to sustain any such co tention and the mortgage was held fraud lent. The main ground for annulling th

Digitized by Google

mortgage in the Stewart Case was the since discredited doctrine of Bonns v. Carter (Neb.) 31 N. W. 381, that such mortgages are against the policy of the state assignment law. In the present case no claim was ever made by the drug company to own the $15.75 note taken in its name by its attorney. We cannot see anything in the transaction fraudulent, or in violation of the rights of other creditors.

The real question in the case seems to be as to the actuality of the possession claimed by the drug company through its attorney, Ashton, and through O'Kane. Ashton and O'Kane both swear that full possession and control of these premises was turned over to them to be held on behalf of the drug company. It appears from the sheriff's statement that when he went to levy his attachments he found both O'Kane and Wilcox in possession, the former claiming to have entire control, and supported in this claim by Wilcox. There is some testimony tending to show that Wilcox, during the few days intervening between the mortgage and the levy, sold some cigars from the stock, and placed the money in his pocket. There also appears an arrangement between Wilcox, O'Kane, and a wholesale grocer named Porter, by which the latter was permitted to take out of the stock 13 or 14 boxes of unopened cigars, which he himself had sold to Wilcox, and for which he had not been paid. The cigars in the stock were included in the mortgage. It seems that it was agreed, when O'Kane was ostensibly put in possession, that Wilcox should pay his wages. After Wilcox had filed his petition in bankruptcy, O'Kane filed a claim for care of the stock during these few days before the levy, and it was allowed and paid, but that O'Kane was acting on behalf of the drug company in such possession and control as he actually had is clear from the testimony of all the parties.

There is evidence by the attorney for the levying creditors that on the day before the levy he visited the drug store, found Wilcox alone in possession and behind the counter, and saw him sell five cents worth of sulphur, and put the money in his pocket. But, as before stated, it is clear that at the time the levy was made Mr. O'Kane was present, and both he and Wilcox were claiming that he held possession on behalf of the drug company. It is clear that the drug company was simply trying to collect a bona fide claim. There is nothing to indicate that it or its attorney was in any way attempting to assist Wilcox in any concealment of his property. There was no attempt at concealment of the fact that the $15.75 note belonged to the Nebraska Mercantile Company in reality, and we are not prepared to say that the trial court's finding that the weight of evidence indicated that O'Kane was in actual possession of the stock, and entitled to hold it for the drug company under the mortgage against these attachments, is contrary to the weight of the evidence.

It is recommended that the judgment of the district court be affirmed.

AMES and OLDHAM, CC., concur.

PER CURIAM. For the reasons stated in the foregoing opinion, the judgment of the district court is affirmed.

MORTON et al. v. WESTERN SEED & IRRIGATION CO.

(Supreme Court of Nebraska. Dec. 4, 1901.)

ERROR—SUPERSEDEAS—PROCEDURE.

1. In order to supersede a judgment under sections 588 and 590, Code Civ. Proc., a transcript, as well as a petition in error, must be filed in the Supreme Court.

Commissioners' Opinion. Department No. 2. Error to District Court, Douglas County; Dickinson, Judge.

"Not to be officially reported."

Action by the Western Seed & Irrigation Company against Robert B. Morton and others. Judgment for plaintiff, and defendants bring error. Reversed.

Byron G. Burbank, for plaintiffs in error. J. W. West, for defendant in error.

POUND, C. The controlling question in this cause is whether, at the time of the sheriff's sale which is the basis of plaintiff's complaint, the judgment under which the sale was held had been superseded. The plaintiff alleged that prior to the sale it had "filed a petition in error, together with a transcript of the final judgment, * * * in the Supreme Court," and that a supersedeas bond was thereupon duly executed, filed, and approved. At the trial, plaintiff introduced the supersedeas bond, a certified copy of the petition in error filed in the Supreme Court, a summons in error, with return showing service thereof, and a certificate of the clerk of the Supreme Court that a petition in error was on file. There was no certificate or proof of any sort that a transcript had been filed, unless the filing thereof may be presumed from the issuance of summons in error. But whatever presumption might thus arise is overcome by the clerk's certificate, which raises a strong inference that only a petition in error was on file, confirmed also by the recitals of the undertaking, and several notices served upon the sheriff by plaintiff, all of which recite the filing of a petition in error only, though the form of undertaking in common use recites filing of a transcript. Even the petition in error omits the usual statement that a transcript is filed therewith. Plaintiff alleged the filing of both the transcript and the petition in error, but we think it proved only the filing of the latter. Construing sections 588, 590, Code Civ. Proc., in connection with section 586, we are satisfied that, in order

supersede a judgment under the two former sections, a transcript, as well as a petition in error, must be filed in the Supreme Court. Originally the Code merely required an undertaking. But in 1873 section 590 was amended to provide that, before the undertaking mentioned in section 588 should operate as a supersedeas, "a petition in error must be filed in the appellate court." The obvious purpose of this change was to require the judgment debtor to actually institute his error proceedings, as well as give an undertaking, before the judgment creditor could be deprived of his right to enforce the judgment. A petition in error without a transcript is wholly nugatory. It gives the Supreme Court no jurisdiction, and has no legal effect whatever. Garneau v. Omaha Printing Co., 42 Neb. 847, 61 N. W. 100. By requiring a petition in error to be filed, the Legislature meant to require it to be filed as provided by section 586, just preceding. A proceeding of some legal force and validity was contemplated—not a mere pretense, conferring no power or jurisdiction on the court wherein it was begun. The same view was taken of statutory provisions of like import in Glafcke v. O'Brien, 1 Wyo. 316, and such has been the general understanding of the profession. Strawn, Supr. Ct. Prac. 162.

We recommend that the judgment be reversed and the cause remanded.

OLDHAM and SEDGWICK, CC., concur.

Reversed and remanded.

HAGADORN v. WAGONER.

(Supreme Court of Nebraska. July 8, 1903.)

APPEAL FROM JUSTICE—DISMISSAL—REVIEW.

1. An appeal from a judgment of a justice of the peace will not be dismissed for the reason that the appellant failed to file a transcript within 30 days from the date of the judgment, where such failure did not occur through the fault or neglect of the appellant. Continental B. & L. Ass'n v. Mills, 62 N. W. 478, 44 Neb. 136.

2. The action of the district court in overruling a motion to dismiss an appeal for failure by the appellant to file a transcript in time will not be reversed where it appears that such ruling was based on evidence, and the evidence has not been preserved and presented to this court by a bill of exceptions.

Commissioners' Opinion. Department No. 3. Error to District Court, Frontier County; Norris, Judge.

"Not to be officially reported."

Action by Aaron G. Hagadorn against John Wagoner. Judgment for defendant, and plaintiff brings error. Affirmed.

J. L. White, for plaintiff in error. L. M. Graham and W. R. Starr, for defendant in error.

DUFFIE, C. This action was commenced in justice court, where judgment went in favor of the plaintiff. An appeal was taken to the district court, but the transcript was not filed for more than 30 days after the rendition of the judgment in the justice court. Motion was made to dismiss the appeal upon this ground. A number of affidavits were filed both in support of the motion and in resistance thereof. Oral testimony also appears to have been offered by the parties. The court overruled the motion, and gave the plaintiff 30 days in which to file his petition, and the defendant 30 days thereafter to plead, and to this ruling the plaintiff took an exception. The plaintiff failed to file his petition or to plead or appear further in the case, standing on his motion to dismiss; and the action being one in replevin, and the property having been delivered to the plaintiff, a trial was had to a jury, and a verdict returned finding that the defendant was entitled to the possession of the property when the action was commenced. Judgment was entered upon this verdict, and the plaintiff has taken error to this court.

The only error assigned is that the court erred in refusing to dismiss the appeal. It has been held in numerous cases that a failure to file transcript within 30 days from the rendition of the judgment appealed from will not cause a dismissal of the appeal, provided the failure to file the transcript was not caused by the neglect of the appellant. This is so well understood that a citation of the cases is not necessary. The defendant in error evidently made a showing that the failure to file the transcript in time was not through his neglect, the journal entry made upon the motion being as follows: "Be it remembered that on the 30th day of October, 1901, it being the second day of the adjourned regular October term of said court, this cause came on for hearing upon the motion of the plaintiff to dismiss the appeal of the defendant herein taken, and the evidence in support of the same was submitted to the court, upon consideration whereof the court overrules said motion, to which ruling the plaintiff at the time excepted." What evidence the court acted upon, we have no means of knowing, as no bill of exceptions was taken, and the evidence has not been preserved. The presumption is in favor of the ruling of the district court, and, in the absence of the evidence, we cannot say that there was error in overruling the plaintiff's motion to dismiss. As that is the only error alleged, the judgment of the district court should be affirmed, and we so recommend.

KIRKPATRICK and POUND, CC., concur.

PER CURIAM. The conclusions reached by the Commissioners are approved, and, it appearing that the adoption of the recom-

¶ 1. See Justices of the Peace, vol. 31, Cent. Dig. § 622.

Digitized by Google

mendations made will result in a right decision of the cause, it is ordered that the judgment of the district court be affirmed.

FOURTH NAT. BANK OF CADIZ, OHIO, v. CRAIG et al.

(Supreme Court of Nebraska. Nov. 20, 1901.)

NOTE—CONSIDERATION—FRAUD—EVIDENCE.

1. A moral obligation to pay a pre-existing legal obligation is a sufficient consideration for a note given in its payment.
2. Evidence examined, and found not to support the defense of want of consideration for, or fraud in procuring, the note and mortgage in suit.

Commissioners' Opinion. Department No. 1. Appeal from District Court, Colfax County; Marshall, Judge.

"Not to be officially reported."

Action by the Fourth National Bank of Cadiz against John Craig and others. Judgment for plaintiff. Defendants appeal. Affirmed.

E. F. Gray and Vesta Gray, for appellants. George H. Thomas, for appellee.

KIRKPATRICK, C. The facts in this case are as follows: On August 7, 1893, John Craig, appellant, executed to the First National Bank of Cadiz, Ohio, a note for $3,744, and, to secure the same, he and his wife executed a mortgage on certain land in Colfax county, this state. Appellant sent the note to his father, Walter Craig, who resided at Cadiz, Ohio, and he indorsed his name on the back of the note, and delivered it to the bank, and appellants received the money. After maturity, appellants failing to pay the note, suit was brought upon it against Walter Craig, as surety, in the courts of the state of Ohio, which on October 29, 1894, resulted in a judgment against him for the amount due on the note. Walter Craig seems to have made payments on this judgment from time to time. Finally an execution was issued on the judgment, and on September 3, 1895, the sum remaining due was paid from the proceeds of a sale of Walter Craig's property. On June 3, 1895, Walter Craig, being indebted to the Fourth National Bank of Cadiz on obligations held by it amounting to several thousand dollars, executed to it an assignment of his claim against appellant John Craig, arising by reason of payment of the note heretofore described, and authorized the bank to proceed to collect the amount due from appellant. Appellee, through its attorney, presented the claim and demanded payment, and appellants to satisfy it, executed the note and mortgage in suit. Appellants, in the trial court, in answer to appellee's petition, pleaded that the note and mortgage in suit were obtained by fraud and misrepresentation, and that they were given wholly without consideration. A decree was entered foreclosing the mortgage, from which appellants bring the case to this court on appeal.

There is no evidence in the record tending to show any fraud or misrepresentation, and the only question presented is whether the note and mortgage in suit were given without consideration. It is argued by appellants that, when Walter Craig signed his name on the back of the note, he became a joint maker; that he did not pay the judgment until September 3, 1895, and therefore he had nothing that he could assign to appellee on June 3, 1895, and that, when the note was actually delivered to appellee, it was on September 11, 1895; that the note had been marked "Paid" and settled, and that it could not at that time be the subject of a valid assignment to appellee, and would not be a consideration for the execution of the note and mortgage in suit. We are unable to find any merit in this contention. It is true, the written assignment seems to have been made on June 3, 1895, but the actual transfer of the note itself was not consummated until September 11, 1895, at which time the First National Bank, on the order of Walter Craig, turned the papers over to appellee. This was some days after the balance due on judgment was paid. It appears from the evidence that the judgment was taken against Walter Craig on this note in July, 1894, nearly a year before this assignment. It also appears that several payments had been made on the judgment from time to time before the final payment was made, but the exact date of the payments does not appear. However this may be, the transfer was completed by an actual transfer of the note on September 11, 1895, 30 days before the execution of the note and mortgage in suit. We have no doubt that these proceedings operated to transfer to appellee the right which Walter Craig undoubtedly had to collect the amount he had paid from appellant John Craig. This was a sufficient legal consideration for the note and mortgage in suit. It further fully appears from the evidence, and the trial court was amply justified in finding, that appellants thoroughly understood all these circumstances at the time the note and mortgage in suit were executed. Back of all this, however, is the fact that Walter Craig, as surety, had paid the debt of John Craig, and was entitled to repayment of the amount. The fact that appellants honestly owed the debt, and ought, in equity and good conscience, to pay it, was a sufficient consideration for the execution of the note and mortgage in suit, even if, for some ulterior reason, Walter Craig might have lost his right of action. The principle is well settled that a moral obligation to pay a pre-existing legal debt is a good consideration for the execution of a note and mortgage in its payment. Story on Prom. Notes (7th Ed.) § 185; Ingersoll v. Martin, 42 Am. Rep. (Md.) 322-325.

The defense presented by appellants is

¶ 1. See Bills and Notes, vol. 7, Cent. Dig. § 206.

Digitized by Google

entirely without equity, and cannot be sustained. The judgment of the trial court is right, and it is therefore recommended that the same be affirmed.

DAY and HASTINGS, CC., concur.

Affirmed.

GRAND LODGE A. O. U. W. v. BARTES.

(Supreme Court of Nebraska. July 3, 1903.)

PEDIGREE—EVIDENCE.

1. A member of the family, living therein, is presumptively qualified as a witness to prove the age and pedigree of the other members; but when it is shown on cross-examination that the knowledge of such witness is derived, not from family tradition and repute, but from statements made by a stranger, the testimony should be excluded.

(Syllabus by the Court.)

Commissioners' Opinion. Department No. 3. Error to District Court, Colfax County; Hollenbeck, Judge.

Action by Frantiska Bartes against the Grand Lodge Ancient Order of United Workmen. Judgment for plaintiff. Defendant brings error. Reversed.

W. P. Hall and Matthew Gering, for plaintiff in error. F. Dolezol, for defendant in error.

DUFFIE, C. This action is brought to recover upon a benefit certificate issued by the plaintiff in error to Joseph Bartes, the husband of the defendant in error, and in which she is named as the beneficiary. The only defense urged, and the only question tried, was the age of the decedent at the time of making application for admission to the order; section 1 of article 2 of its constitution and by-laws providing that "no person shall be admitted to membership in the order except that he be a white male of the full age of twenty-one years and under forty-five years at the time of receiving the workman degree." Joseph Bartes' application for beneficiary certificate bears date June 29, 1894, in which he states that he was born on the 25th day of December, 1849, at Moravia, Europe. He died as the result of an accident on February 25, 1898. In the investigation following his death, the plaintiff in error obtained from Mrs. Bartes what is termed a "birth certificate" of her husband, in which it is recited that he was born on the 23d day of December, 1846. On the trial no witness made any direct statement as to the age of Joseph Bartes, but his mother testified that she was married to his father on February 3d, and on Christmas of the same year of her marriage her son Joseph was born; that his father died in 1900, and that she had lived with him 50 years, lacking about 3 weeks; that they were preparing to celebrate their golden wedding at the time of his death. Accepting this as a correct statement of the facts, it would establish that Joseph Bartes, the deceased, would have been 50 years of age on the 25th of December, 1900, and that he was born in 1850. On her direct examination the plaintiff in error testified as follows: "Q. Mrs. Bartes, do you know how old Mr. Bartes was when you married him? A. Yes, sir. Q. You may state how old he was when you married him? A. He was twenty-seven years old. Q. How long were you married to him before he died? A. It would be twenty-five years if he was living now. Q. Would it be twenty-five years this year? A. Yes, sir; this fall, at All Saints Day." She could not give the years of the marriage, but, as her husband had been dead two years, her testimony corroborates that of her mother-in-law, and fixes the age of Joseph Bartes at the time of his death between 47 and 48 years. On cross-examination Mrs. Bartes testifies as follows: "Q. How long had you known Mr. Bartes before your marriage? A. I only knew him when I was married. Q. Did you know Mr. Bartes a year before you married him? A. No, sir. Q. How do you know that your husband, Joseph Bartes, was twenty-seven years of age twenty-five years ago, when you married him? A. From the publication of the banns. * * * Q. Is the only way that you know the age of your husband, Joseph Bartes, at the time of your marriage, what the priest announced at the banns? A. No other way. Q. In speaking about the banns being announced, do you mean that the preacher or priest announced it from the pulpit to the congregation that you and Mr. Bartes were engaged? A. Yes, sir. Q. Announced it orally? A. Yes, sir. Q. Now, from the time that you heard the announcement made by the priest of the banns of marriage, have you ever had occasion to think or consider your husband's age, until this case was begun? A. I never did. Q. You never talked with your husband about his age? A. No, sir. Q. And any information about your husband's age was gained from the announcement made by the priest at the time the banns of marriage was announced? A. Yes, sir; that is it." At this point the defendant moved the court to strike out all the evidence of Mrs. Bartes as to the age of her husband, for the reason that there was no foundation laid for such evidence, and the witness had not shown herself competent to testify as to his age, and that the only statement as to his age is the statement made by the priest who announced the banns; the same being hearsay and an improper method of proving age. This motion was overruled, and defendant excepted.

The date of a person's birth may be testified to by himself or by the members of his family, although he must and they may know the fact only by hearsay based on family tradition. No rule is better established than this one, and, when it is shown

that the witness is a member of the family of the person whose age is the subject of inquiry, the presumption obtains that the witness is competent, without laying any foundation therefor; but on cross-examination it may be shown that although a member of the family, and prima facie qualified to testify as to age or pedigree, the witness is not qualified, either because he has no knowledge in fact on the question involved, from not having heard it discussed, or that his opportunities for obtaining knowledge on the question has been insufficient to make him a competent witness. Harland v. Eastman, 107 Ill. 535. In the case cited it is said: "Such conversations may have been such in extent and variety, and may have been held under such circumstances, as to enable a witness to say that such was the reputation in his family, but the conversations may not have been such. The witness surely could not be permitted to swear to any specific thing which his wife or either of her uncles had said in his hearing, because they are living, and their sworn testimony is better than his unsworn statements. It follows that the witness cannot properly be allowed to state his conclusions from such unsworn statements, unless all of them, taken together with their surroundings, enable him to say such was the accepted state of the case in the family, or such was the uncontradicted repute in the family." Mrs. Bartes, on her cross-examination, gave the source of her information as to the age of her husband at the date of her marriage. This information came from the priest, and not from any member of the family; and she further testified that it was the only information relating to his age at that time of which she was possessed. In this state of the case, we have no hesitation in saying that she showed herself incompetent to testify, and that it was error not to exclude her testimony upon the motion made therefor. It is true that she was afterward recalled, and the following question asked her: "Q. Mrs. Bartes, was it not talked of between you and your husband— That is, I mean, when you were together did you not sometimes talk over the fact of how old you were and how old he was? A. We never talked about our age. Once in a while he spoke of his birthday. Once in a while we talked of our birthdays." She further testified that both her father-in-law and mother-in-law lived with them in their family, and was then asked this question: "Now, Mrs. Bartes, in your talks—that is, in your family talks between your husband and yourself and his father and mother—was it ever talked of how long you had been married to your husband, and how long you lived together; that is, before his death? A. Yes, sir; it was talked. Q. Now, Mrs. Bartes, from your living together with the father and mother of Joseph Bartes, your husband, and they with you, do you know what day their wedding anniversary came in the year? A. Yes, sir; it came on the 2d of February." It is insisted that, because of these people all living together, she was qualified to speak of the age of her husband at the time of their marriage. Presumptively, this is true; but, as before stated, she, by her own declarations, has shown her disqualification; her only knowledge upon that subject having come from the declaration of a priest, who it is not claimed would be qualified as a witness upon that question. What weight the jury may have attached to this testimony, we cannot, of course, say; but it was submitted to them with other competent testimony as to the age of Joseph Bartes, and it may or may not have controlled their verdict. For the error in submitting this evidence to the jury, we recommend a reversal of the judgment, and that the case be remanded for another trial.

KIRKPATRICK and POUND, CC., concur.

PER CURIAM. For the reasons stated in the foregoing opinion, the judgment of the district court is reversed, and the case remanded for another trial.

BROWN v. HELSLEY.

(Supreme Court of Nebraska. Nov. 20, 1901.)

PLEADING — CONSTRUCTION — ACTION FOR COSTS—JUDGMENT—PRESUMPTIONS.

1. When a petition is not assailed until after judgment, it will be liberally construed, so as to be sustained if possible.
2. An absolute judgment is one which is operative and effective.
3. It is the presumption of law that all officials have done their duty, until the contrary is shown.

Commissioners' Opinion. Department No. 2. Error to District Court, Douglas County; Dickinson, Judge.

"Not to be officially reported."

Action by Lee Helsley against Frank D. Brown, administrator. Judgment for plaintiff, and defendant brings error. Affirmed.

T. J. Mahoney, for plaintiff in error. Lee Helsley and Charles S. Lobingier, for defendant in error.

OLDHAM, C. This was a suit against a surety in an undertaking in appeal. The material allegations of the petition were that one Antonio Columbio procured a judgment before a justice of the peace of Douglas county, Nebraska, for $194, against Frank Romano and Michelina Romano, on the 5th day of July, 1895; that on the 15th day of July the defendant Lucien Woodworth made, executed, and delivered to the plaintiff in said suit an undertaking in appeal in the sum of $500. The undertaking is set out in the petition, and is in the statutory form, and contains, among other things, the following condition: "That the said Frank Ro-

¶ 1. See Pleading, vol. 39, Cent. Dig. § 73.

Digitized by Google

mano and Michelina A. Romano will prosecute their appeal to effect without unnecessary delay, and that said appellants, if judgment be rendered against them on appeal, will satisfy such judgment and costs." The petition further alleges that said cause was appealed to the district court of Douglas county, Neb., and on the ——— day of May, 1896, a judgment, with costs, was duly rendered against the said Frank Romano and Michelina A. Romano. It is further alleged that said judgment has not been reversed or modified, and that no proceedings are pending to reverse said judgment, and the same has become, and now is, absolute. It is also alleged that an execution was issued on the judgment, and returned unsatisfied, either in whole or in part.

The fifth and sixth paragraphs of said petition are as follows:

"(5) Plaintiff further alleges that, in the several trials of the said cause of Columbio v. Romano et al., the following named persons earned fees as follows: John Drexel, as sheriff, $1.10; M. Maring, as witness, $10; Frank Pascall, as witness, $2.20; B. Mancuzo, as witness, $5.30; Martin Dunnizzo, $11.90, as witness; Lewis De Frazzia, $20.20, as witness; M. Romano, as witness, $4; Antonio La Grotta, as witness, $20; G. Dennuzzo, $14, as witness; Frank Moores, as clerk, $13.65; A. Frank, as clerk, $27; county of Douglas, for jury fees, two trials, $10; C. W. Kink, as constable, $4.75; John A. Karling, as justice of the peace, $8.10; C. H. Fitch, as constable, $8.80; A. Columbrio, for money advanced, $6; the total of said several amounts being the sum of $186.70.

"(6) Plaintiff further avers that the several sums named above have been duly assigned to him, and he is now the owner of the same."

When this petition was filed, defendant Woodworth entered a voluntary appearance in the court below, but neglected to either plead or answer until after judgment had been rendered against him. He then filed a motion for a new trial, and brought error proceedings to this court. After suit was instituted in this court, defendant Woodworth departed this life, intestate, and the cause was revived in the name of his administrator.

The only question called to our attention is as to the sufficiency of the petition to sustain the judgment. As this question was not presented until after judgment in the court below, it must be determined under the rule that, when a petition is not assailed until after judgment, it will be liberally construed, and every reasonable presumption will be indulged to sustain it, if possible. We cannot now examine the question as to whether this petition would have been vulnerable to a motion to make it more specific and certain because the time for filing such motion has long since passed; nor can w examine it in the light of defenses th might have been interposed by answer, b cause answer day was permitted to pass to the neglect of the defendant in the cou below. The only question is, will this pe tion, when aided by all reasonable presum tions as to its sufficiency, support a verdic It is alleged against the petition that t costs for which suit is brought are not leged to have been taxed against the R manos in the judgment against them in t district court. While the petition does n contain this specific allegation, it does alle that "A judgment, with costs, was duly re dered against the said Frank Romano a Michelina A. Romano." It also alleges th at the several trials of the cause the perso named in the petition "earned fees as f lows" (enumerating them). Now, as all t fees sued for were proper items to have be taxed as costs, it will be presumed, in a sence of a showing to the contrary, that t officer whose duty it was to tax costs d his duty. Again, the condition of the bo was that he (defendant) "will satisfy su judgment and costs," so that the condit of the bond did not limit the liability of t defendant to only such costs as should taxed against the Romanos in the distr court. If any of the costs sued for w improperly charged, such fact should ha been pleaded before judgment.

It is further urged against the petit that it does not show that the costs sued have not been paid. In the first place, the defendant relied on payment as a fense to this action, he should have plead it; and, again, we think that, under a l eral rule of construction, the petition do show that the costs sued for had not be paid, because the petition alleges "that judgment, with costs," was duly rende against the Romanos, and that the same "b become, and now is, absolute"; and it a alleged the issuing and return of an exe tion unsatisfied on such judgment. No when a judgment is absolute, it must be erative and effective, and this allegation the petition fairly negatives the fact of t payment of such judgment; also the alle tion of the return of the execution on t judgment unsatisfied, "in whole or in par negatives the idea of any payment hav been made on the judgment or costs.

We therefore conclude that the petiti while not a model of concise pleading, is sufficient to sustain the judgment. It therefore recommended that the judgm of the district court be affirmed.

POUND and SEDGWICK, C. C., concur

Affirmed.

Digitized by Google

AGNEW v. OMAHA NAT. BANK.

(Supreme Court of Nebraska. July 3, 1903.)

RES JUDICATA—FINAL DECREE—DISMISSAL—CONVERSION—DIRECTING VERDICT—PARTNERSHIP.

1. A final order or decree is conclusive as evidence in a subsequent action between the same parties or their privies upon the matters therein adjudicated.

2. To constitute an order or decree final, and conclusive as evidence in a subsequent action, it must have been a complete disposition of the main thing or matter in controversy, leaving nothing for the further determination of the court.

3. When a suit is dismissed as to one of two or more defendants without prejudice, such defendant ceases to be a party to the record, and the effect of the dismissal is to leave such defendant in the same position as if he had never been a party to the action.

4. If before such order of dismissal there has been a decision or decree upon one of several issues made by the pleadings, but such determination does not fix or determine the liability of the defendant who is subsequently dismissed, such preliminary decree does not estop the defendant dismissed in a subsequent action from litigating the same issue.

5. Plaintiff alleged in his petition a partnership, and the conversion by one of the defendants of the assets of the partnership. Such defendant denied the partnership, and that it had converted the assets of the partnership. A preliminary decree was entered, finding that a partnership did exist; reserving the case for supplemental proceedings and an accounting. Before final decree, said defendant was dismissed out of the case without prejudice. *Held* that, in a subsequent action between plaintiff and the defendant dismissed, the latter was not concluded by the preliminary decree finding the existence of a partnership.

6. Evidence examined, and *held* to sustain the peremptory instruction for defendant.

(Syllabus by the Court.)

Commissioners' Opinion. Department No. 1. Error to District Court, Douglas County; Estelle, Judge.

Action by Frank A. Agnew against the Omaha National Bank. Judgment for defendant, and plaintiff brings error. Affirmed.

Joel W. West and T. J. Mahoney, for plaintiff in error. Hall & McCulloch and Paul Charlton, for defendant in error.

KIRKPATRICK, C. This is an error proceeding prosecuted from a judgment of the district court of Douglas county in favor of the defendant below in an action wherein Frank A. Agnew, as receiver, was plaintiff, and the Omaha National Bank was defendant. Plaintiff's petition alleged the corporate character of defendant under the laws of Congress relating to national banks; that on January 5, 1894, Phil Stimmel and Frank T. Emerson were copartners in a seed-growing business at Omaha and Waterloo, Neb.; that at the date named the copartnership was the owner of chattel property of the value of $51,114, and of evidences of debt amounting to $13,124, and that on or about that date the defendant wrongfully obtained possession of the chattels, notes, bills, and accounts receivable, wrongfully and unlawfully converting the same to its own use, and to the damage of the partnership in the sum of $64,138.57; that on January 6, 1897, in a suit pending at the time of the filing of this petition in the district court of Douglas county, wherein Emerson, for himself and all other creditors of the copartnership, is plaintiff, and Stimmel is defendant, the plaintiff herein was appointed receiver of the partnership assets, and by order of the court was directed and required to bring suits to recover all debts owing to the partnership; and that plaintiff qualified as such receiver, bringing this suit as such; the petition closing with a prayer for judgment against the defendant for $64,138.57. Defendant answered, denying generally, but averred that on January 6, 1894, under a valid judgment in its favor, it caused execution to issue against Phil Stimmel, whereby certain property was seized, which was sold, the proceeds being applied in satisfaction of its judgment against Stimmel; and pleaded that all of its acts and doings, and those of the court and its officers, were legal and regular. Plaintiff filed a reply, and admitted that defendant had seized certain property upon execution, but alleged that such property was part of the property charged by plaintiff to have been converted by defendant; denied that the execution referred to in defendant's answer was legal and regular; alleged that none of the property so seized was liable on execution against Stimmel; alleged that in the suit theretofore pending in Douglas county, mentioned in the petition, in which suit defendant herein was defendant, a partnership between Emerson and Stimmel was alleged, and that defendant herein, as defendant in that suit, answered, denying the existence of the partnership; that a trial of that issue was had in that cause, wherein defendant herein appeared and defended; that upon consideration the court found that the partnership did exist on January 6, 1894, and on July 10, 1895, entered a decree adjudging that Emerson and Stimmel were partners; that afterwards plaintiff herein was appointed receiver; and that defendant is estopped by record to deny the existence of such partnership. There was also a plea that defendant was estopped to deny the regularity of plaintiff's appointment as receiver, which it is not necessary to notice. There was a trial to the court and a jury, and at the conclusion of the testimony the court, on motion of the defendant, instructed the jury to find for defendant. From a judgment rendered on such verdict, and the ruling of the trial court denying the motion of plaintiff for a new trial, plaintiff prosecutes this proceeding. A somewhat detailed statement of the facts as they appear in the record is necessary to apprehend the questions presented in briefs and argument, which require determination.

¶ 3. See Judgment, vol. 30, Cent. Dig. § 1034.

Digitized by Google

It appears from the record that the following agreement was entered into on the date and between the parties named therein:

"Memorandum of agreement entered into this 19th day of January, 1892, by and between Phil Stimmel of Omaha, Douglas county, Nebraska, of the one part, and Frank T. Emerson, of the same place, of the other part, witnesseth: That it is hereby mutually understood and agreed between the parties hereto that the said Phil Stimmel is to furnish all money necessary for all expenses in making contracts for the growing and sale of garden and other seeds for the season of 1892–1893; for the purchase of all stock; planting seeds and delivery of the same; and for all expenses of office, administration, etc., without charge for interest or use. And that Frank T. Emerson is to devote all his time and abilities, to the absolute exclusion of every other business, under the direction and in the name of Phil Stimmel, to the conduct of said business to the best of his knowledge, using all the connections which his former conduct of a like business has brought, together with such other as he may be able to secure. And further, that the said Phil Stimmel is to have sole executive charge, direction and control of the whole of said business, and all contracts of sale are to be passed upon as to their credits by the said Phil Stimmel. The net profits accruing from the aforesaid business after paying all expenses, disbursements, and losses, if any, shall be divided between the parties hereto in the proportion of 66⅔ per cent. thereof to Phil Stimmel, and 33⅓ per cent. to Frank T. Emerson, which shall be compensation in full to said Emerson for his good will, services, etc. And further, that said Frank T. Emerson is to be entitled to draw against his said proportionate share of the probable net profits of said business for said season of 1892–1893, the sum of $150.00 per month from February 1st, 1892, to June 1st, 1893, or the date when the contracts of the year shall be closed and settled, if before June 1st, 1893, at which date a final settlement between the parties hereto is to be made. In witness whereof, the parties have hereunto set their hands to this, and a duplicate instrument of like tenor and effect, at Omaha, Nebraska, the date and year first above written. Phil Stimmel. Frank T. Emerson. Witness: George H. Totten.

"Omaha, Nebraska, Jan. 20, '93. By mutual consent, this agreement is extended and continued in full force and effect for twelve months, excepting settlement of 1892 business, that to be on or before June 1st, 1893. Phil Stimmel. Frank T. Emerson."

While this agreement was in full force, and on January 6, 1894, Stimmel, who was largely indebted to the defendant, the Omaha National Bank, and to a firm of attorneys for legal services, made confession of judgment in their favor, upon which executions were issued and levied upon property of Stimmel, and also upon property connected with business which was being transacted un the agreement quoted above. Thereup and before any sale was had under the e cutions, and on January 24, 1894, Frank Emerson, "for himself, and on behalf all creditors of the seed-growing departm of Phil Stimmel who may desire to a themselves of the benefits of this actio filed a petition in the district court of Do las county, making Phil Stimmel, Montg ery, Charlton & Hall, the Omaha Natio Bank, and J. C. Drexel, sheriff, defenda in which he alleged, first, the agreement ready quoted, faithful performance by of his part thereof; that the business been largely profitable, but that defend Phil Stimmel had excluded him from insp tion of the books; that Stimmel had diver the funds and assets of the said busin and refused to account to him; that the business owed many obligations, to the p ment of which, if the funds thereof w properly applied, there would be left a la surplus for division between Emerson Stimmel under the agreement mentior that the conduct of Stimmel was calcula to inflict great and irreparable injury plaintiff Emerson; that Stimmel had con erated with the Omaha National Bank, Montgomery, Charlton, and Hall, who fraudulently procured said confessions of ju ment with the fraudulent purpose of levy upon the assets of the seed-growing dep ment mentioned, with intent to defraud pl tiff Emerson and said creditors; that the de due from Stimmel, upon which said judgme were based, were private debts of Stimm and had no connection with the busin known as the seed-growing and contract department of Stimmel; that Stimmel, the purpose of defrauding plaintiff Emer out of his share of the profits of said b ness, had diverted the assets of that dep ment to other departments of his busin using the same for the payment of his de not connected therewith, and that an counting was necessary to determine w was due to Emerson; that the said defe ants had full knowledge of the relations tween Emerson and Stimmel; that the fendants named had procured from Stim an assignment to them of a large amo of notes, bills, acceptances, and accounts longing to the partnership, and had cured possession of the books thereof in der to cover the fraud perpetrated; plaintiff, without a discovery, was w out remedy; that the character of most the chattels levied upon was such tha sale upon execution would result in g and needless sacrifice; that there were la sums outstanding due to Stimmel on acco of the said business, which Stimmel was lecting and converting to his own use; many replevin suits were being prosecu to get possession of said goods; that Stim was insolvent. The petition closed wit

Digitized by Google

prayer for an accounting between Emerson and Stimmel "touching the said profit-sharing business enterprise," for the appointment of a receiver during the pendency of this suit, for an injunction against Stimmel from interfering with the assets of the business referred to, and against defendant from attempting to apply the assets of said business to the satisfaction of their claims. To this petition of Emerson the Omaha National Bank answered, justifying its seizure, denying fraudulent intent towards Emerson, and denied that he "ever had any interest in the business, goods, property, effects, or assets of the said Phil Stimmel as a partner of said Stimmel," and pleaded an adjudication by the district court of Douglas county that plaintiff Emerson had no claim as against Stimmel on the ground of partnership; pleading other matters not material here. To this answer plaintiff Emerson pleaded a general denial. The case of Emerson v. Stimmel et al. was thereupon submitted to the court upon the single issue whether there was in fact a partnership between Emerson and Stimmel, and upon that issue a decree was upon July 10, 1895, rendered, adjudging that there was a partnership; that Emerson was entitled to an accounting, as between himself and Stimmel, of the assets and liabilities of the seed-growing department of the business of Phil Stimmel. The decree ordered a reference; the referee to report on or before December 20, 1895. To this decree the defendants, Omaha National Bank and Montgomery, Charlton, and Hall, took exceptions, and were given 40 days from the rising of the court to prepare and serve a bill of exceptions. On May 29, 1896, the Omaha National Bank filed a motion in the case of Emerson v. Stimmel et al. to be dismissed out of that case at plaintiff's costs, for the reasons: First. That the real intent of the action was to obtain an accounting between Emerson and Stimmel, his prayer for an injunction against the bank having been by a prior order of the court, on July 26, 1894, denied, so that the bank was no longer a necessary or proper party. Second. Because it did not appear that plaintiff Emerson would, upon an accounting, be shown to have an interest in the alleged partnership assets; that defendant was not insolvent, or liable to become so. Third. That, if plaintiff had an action against the bank, it was for conversion, which was an action at law, and not in equity. Fourth. That there had been an interlocutory decree on July 10, 1895, finding a partnership and ordering a reference, but that plaintiff Emerson had failed to prosecute his case, whereby, to its great detriment, defendant bank had been wrongfully retained in the case. On September 29, 1896, this motion was sustained; the bank being dismissed without prejudice at plaintiff's costs. On January 6, 1897, Frank A. Agnew, plaintiff herein, was, on motion of plaintiff in Emerson v. Stimmel et al., appointed receiver "of all the partnership effects and assets of every kind and description," both parties being directed to deliver same to him, and he was authorized to sue for and recover all debts due the partnership. Agnew immediately gave bond and qualified as receiver. After defendant bank had been dismissed on its own motion out of the action of Emerson v. Stimmel et al., Agnew, receiver, commenced against it the action for conversion which is now here for review. However, before this action came on for trial, defendant bank asked and obtained leave again to answer and intervene in the equity suit, and obtained an injunction against plaintiff, Agnew, receiver, from proceeding in the law action herein. But when the equity suit came on for trial, defendant bank was, upon its motion, again dismissed out of that suit, and that suit went on to decree July 25, 1899, in which judgment was rendered upon the report of the referee against the partnership in favor of several hundred intervening creditors; but the court expressly declined to give judgment against defendant bank, on the ground that, by dismissing it out of the action, jurisdiction over it had been lost, but found that it was indebted to the partnership in a large sum; directing the receiver to prosecute his action against it. Then it was that the present action was prosecuted to final judgment, as already narrated.

While the record in this case is somewhat voluminous, and a statement of the facts necessary to an understanding of the case cannot conveniently be embraced within a small compass, there are, at most, only two questions raised by the record, and necessary to be determined: (1) Was the defendant here estopped from denying a partnership by reason of the interlocutory decree of July 10, 1895, entered in the action of Emerson v. Stimmel, finding the existence of a partnership at a time when defendant was still a party to that action? And (2) if it was not estopped, is the peremptory direction for defendant justified?

Plaintiff, invoking the maxim that a judgment as evidence is conclusive, as a plea a bar, insists that the decree of July 10, 1895, pleaded in his reply, has all the elements of a final adjudication between plaintiff and defendant on the issue of a partnership, and is res adjudicata herein. It appears that after that decree was entered, and the order of reference was made, defendant bank was twice dismissed out of the action—the latter time just before the final decree of July 25, 1899, in which decree, as already stated, the court declined to give judgment against the bank in favor of the receiver, on the ground that by dismissing it out of the action it had lost jurisdiction over it. The inquiry accordingly is, what effect did the dismissal of defendant bank prior to the decree of July 25, 1899, have as to the binding force upon defendant of the

Digitized by Google

decree of July 10, 1895, as to the issue therein adjudicated? Manifestly, the decree of July 10th is res adjudicata as to all parties to the final decree of July 25, 1899. Is it otherwise as to defendant, because it was dismissed before final decree? To hold in the negative would, we believe, be unwarranted, in sound reason and authority. The decree of July 10th was interlocutory; that is, it was not a final determination of the principal thing sought or litigated in the action commenced by Emerson. It was a separable determination of one issue, declaring that a partnership did exist, leaving still for determination whether defendant was liable though a partnership did exist. Was that such a final determination as would have given the bank, then in that action, a standing in the appellate court? Had the bank attempted to appeal, a sufficient answer would have been found in Lodge v. Twell, 135 U. S. 232, 10 Sup. Ct. 745, 34 L. Ed. 153. There the plaintiff brought suit against three defendants, one of whom was a judgment debtor to her under a decree for alimony, and the other two were fraudulent grantees of such debtor. By decree the conveyances were held fraudulent, reserving the case for an accounting as to the value of the property disposed of by the fraudulent grantees. It was held that the first decree, although it disposed of the equities of the case, was interlocutory, from which no appeal lay, as it was still necessary to determine in what amount an order for payment or a money decree should be entered against the defendants, fraudulent grantees. The decree of July 10th in this case did not even dispose of the equities of the case, and did not purport to fasten upon defendant bank any liability whatever. In McGourkey v. R. Co., 146 U. S. 536, 13 Sup. Ct. 170, 36 L. Ed. 1079, and the many cases there cited and reviewed, the principle that a decree ordering a reference to a master for judicial purposes, whose functions are something more than merely ministerial, is not final and not appealable, is shown to be firmly established.

It has, so far as our investigation has led us, been the uniform holding of this court that an adjudication, to be binding as res adjudicata, must dispose of the whole merits of the case on trial, and leave nothing for the further determination of the trial court. Johnson v. Parrotte, 46 Neb. 55, 64 N. W. 363, and cases there cited. Under the issues as joined in Emerson v. Stimmel et al. (at the rendition of the decree of July 10, 1895), there is nothing to warrant the conclusion that the determination of the issue in that manner settled the question of the liability of the defendant bank to the partnership. Defendant bank might have shown that it had not taken partnership assets. "A judgment, to be conclusive, must be final and upon the merits." Cheney v. Cooper, 14 Neb. 415, 16 N. W. 433. That is, it must be full disposition of the main thing sought be recovered or accomplished by the ins tution of the suit. This decree cannot said to have had these characteristics. it was not a final order—final in the sen that it was appealable—then it would see to follow that it would not conclude defen ant bank herein, as to the issue therein pa ed upon, unless it can be said (and su seems to be the contention of plaintiff) th it did become final and appealable by virt of the rendition of the final decree of Ju 25, 1899. But on that date it was no long a party to the action, having been auth ized by the court to withdraw therefron an authorization which, in effect, told that the final decree about to be entered w no concern of its. With the question of t correctness of the order of dismissal we a certainly not now concerned, but surely gave to defendant bank a right to assu that it was out of the case; that so far as was concerned, it was in the same positi no better and no worse than if the acti had never been instituted. We believe it the law, applicable here, well sustained authoritative decisions, that the order of d missal as to defendant in that action with prejudice before final decree, before the l bility of any party thereto had been fix was, as to the bank, a complete nullificati of all that had previously taken place, well as an exculpation from any liabil under the final decree.

In Loeb v. Willis, 100 N. Y. 231, 3 N. 177, it is said: "By the discontinuance of action, the further proceedings in the acti are arrested, not only, but what has be done therein is also annulled, so that the tion is as if it never had been." An exa ination of the Loeb Case, we think, will sh that it is in point herein. There the plaint brought his action to foreclose a mortga and procured a decree and judgment for ficiency. Subsequently to the rendition the decree of foreclosure, but before proce ing to sale thereunder, he made a motion leave to discontinue his foreclosure suit, a begin an action against the same defenda upon the bond accompanying the mortga This was granted, and in the action at l defendant sought to show matters in avo ance, which were ruled out on the theo that the judgment in the foreclosure suit w an adjudication thereof. Holding this acti on the part of the trial court error, the preme Court of New York used the langus already quoted. If the order of dismis after judgment in the case cited nullified t judgment, and deprived it of the dignity an estoppel in the action at law, it wou seem, upon the same principle, the dismis under consideration before final decree, after the interlocutory decree of July 1895, would have like effect in nullifying t decree, so that it would not work an toppel in a subsequent action at law. Ogl City v. Weaver, 108 Fed. 564, 47 C. C.

Digitized by Google

485, was a suit in the federal court by the receiver of a waterworks company against Ogden City. The defendant sought to estop the plaintiff by pleading a decree in the state court in a case in which Ogden City was plaintiff and the receiver's predecessors in interest were defendants, holding the contract declared upon by the receiver invalid. It appeared that after rendition of the decree mentioned the case was retained for an accounting with reference to the value of the property affected by the contract, and the business transacted between the parties during the period the contract was supposed to be valid, and that the case was still pending before the master in the state court. It was held that the decree was interlocutory, and did not conclude the receiver in the federal court upon the question of the validity of the contract. In the case last cited the equity suit in the state court was still pending, but in the case at bar the equity suit in which decree of July 10, 1895, was rendered had, as to defendant, been discontinued.

We conclude, therefore, that the decree of July 10 did not estop defendant bank to deny the partnership.

If defendant was not concluded by that decree, was the peremptory instruction for defendant right, under this record? Counsel for defendant argue at some length that the agreement between Stimmel and Emerson was not a partnership agreement, but merely a profit-sharing contract, and that under it Emerson was not responsible for debts, or liable for losses, other than a failure of the business to earn profits. However, in view of the conclusion already announced that the decree in Emerson v. Stimmel et al. did not estop defendant, we must inquire whether there is any competent proof of a partnership. Plaintiff alleged such a partnership, defendant denied it, and plaintiff pleaded an estoppel, but has not sustained such plea. This certainly put plaintiff upon other and independent proof of a partnership. As we view the record, plaintiff seems to have relied for his right to recover, so far as that right must be determined by the existence of a partnership, wholly upon the plea of estoppel, and the record evidence introduced in support thereof. It is true that the agreement is contained in the bill of exceptions, but only as one of the several exhibits introduced in support of the plea of estoppel. Beyond this, the issue of a partnership is without any evidence in its support. Moreover, counsel for plaintiff, in his reply brief, does not claim that the agreement, standing alone, shows a partnership, but says that in the action in which the relationship between Stimmel and Emerson was held to be a partnership there was much evidence in addition to the agreement, which showed that Emerson also assumed the risks of the business and was liable for the debts, and that in that action it was conclusively proven that there was a partnership. Under this state of the record, we do not believe that the question of the legal effect of that agreement is before us. It follows that the allegation of a partnership is wholly unsupported by the evidence. Accordingly, it must be held that the judgment of the trial court is right, and it is recommended that the same be affirmed.

HASTINGS, C., concurs.

PER CURIAM. For the reasons stated in the foregoing opinion, the judgment of the district court is affirmed.

PETTIBONE et al. v. YEISER et al.

(Supreme Court of Nebraska. Nov. 20, 1901.)

APPEAL—REVIEW—TAX LIEN—FORECLOSURE.

1. Rulings of the trial court, made during the progress of the trial, will not be reviewed by this court when presented on appeal.
2. A party who brings a case to this court on appeal impliedly consents to submit the issues for decision on the evidence actually in the record.
3. Evidence examined, and *held* sufficient to warrant the finding and decree of the trial court.

Commissioners' Opinion. Department No. 3. Appeal from District Court, Webster County; Beall, Judge.

"Not to be officially reported."

Action by J. H. Pettibone and others against John O. Yeiser and others. Judgment for defendants, and plaintiffs appeal. Affirmed.

R. T. Potter and J. S. Gilham, for appellants. John O. Yeiser, for appellees.

ALBERT, C. This action was brought to foreclose an alleged tax lien on real estate. The trial court found for the defendants, and dismissed the action. The plaintiffs come here on appeal.

Complaint is made of some of the rulings of the court made during the progress of the trial, but it is the settled rule of this court that such rulings will not be reviewed on appeal, but must be presented by petition in error. Alling v. Nelson, 55 Neb. 161, 75 N. W. 581. In the same case it is held that a party who brings a case here on appeal impliedly consents to submit the issues for decision on the evidence actually in the record. Hence the only question that presents itself is whether the evidence actually in the record warrants the finding and decree of the trial court. One of the facts essential to a finding and decree in favor of the plaintiffs is the regularity of all proceedings prior to the tax sale under which plaintiffs assert their lien. The tax certificate was ruled out —rightly or otherwise we cannot, as we have seen, determine in this proceeding. Had it been admitted, if admissible, it would have been presumptive evidence of such regularity. Whether such fact could have been shown by other evidence, we need not determine, because it is sufficient to say that it was not

Digitized by Google

Therefore there is a failure of proof on a material point, and the court properly found for the defendants and dismissed the case.

It is recommended that the decree of the district court be affirmed.

AMES and DUFFIE, CC., concur.

Affirmed.

THOMPSON v. NELSON et al.*

(Supreme Court of Nebraska. July 8, 1903.)

ERROR—CONTEMPT PROCEEDINGS—FINAL JUDGMENT.

1. Orders and judgments of the district court in proceedings for contempt are reviewable in this court by petition in error only.

2. A judgment for costs only is not final, and is not reviewable in this court.

Commissioners' Opinion. Department No. 1. Appeal from District Court, Madison County; Boyd, Judge.

"Not to be officially reported."

Action by Thomas A. Thompson against Andrew N. Nelson and others. Judgment for defendants, and plaintiff appeals. Dismissed.

Allen & Reed, for appellant. M. D. Tyler, for appellees.

AMES, C. The facts in this case are not in dispute. Appellant, who was plaintiff in the district court, was mortgagee and the appellees were mortgagors in possession of a tract of farm land. A decree of foreclosure of the mortgage was rendered in April, 1900, and stayed at the request of the defendants. The land was sold under the decree on May 13, 1901, and the sale was confirmed, and sheriff's deed executed and delivered pursuant thereto on the 23d of the same month. The mortgagors continued in possession, and had, of course, notice of all these proceedings, and on or immediately before the last-named date completed the planting of a crop on the premises. They were and are insolvent, but continued in possession and cultivated the crops without objection by the plaintiff until the beginning of this action on the 14th day of August, 1901. The action was brought and prosecuted upon the theory that after the date of the sale and deed the defendants had remained in possession as tenants at will of the plaintiff, and were liable to him for the reasonable value of the use and occupation. It was alleged that they were insolvent, and were about to sell and dispose of the then ripened and ripening grains, in which the plaintiff claimed an interest to the extent of a third of their value by way of rent, and prayed for an accounting and an injunction to restrain the defendants from disposing of the property until the amount of the plaintiff's claim should be ascertained and satisfied. A temporary injunction was granted, and, together with the summons, duly served on t defendants on the same day. Neverthele the defendant Andrew N. Nelson did sell part of the grain, but whether before or af being notified of the injunction is disput He was cited to show cause why he shou not be punished for contempt in so doing, b the court, upon the hearing, discharged t process. No separate proceeding to revi the order discharging him has been pro cuted, and the matter need not be furth considered here. Zimmerman v. The Sta 46 Neb. 13, 64 N. W. 375; Gandy v. T State, 13 Neb. 445, 14 N. W. 143. The acti was tried without the intervention of a ju and the court made some special findings fact, but no general finding in favor of eit party, and entered the following order, whi was excepted to by the plaintiff: "It is f ther considered, adjudged, and decreed t the injunction heretofore granted in this c be, and the same is hereby, dissolved, a the defendants are adjudged and decreed be the owners of the crops raised by th on said premises during the year 1901, a that the defendants recover from the pla tiff their costs herein expended, taxed at cents." The plaintiff filed a motion for new trial, which was overruled, but brought the record to this court by appeal

There is nothing here for review. T judgment is for costs only. The action w not dismissed, but is still pending in t district court. Smith v. Sahler, 1 Neb. 3 Scofield v. State Nat. Bank, 8 Neb. 16; Ni ols, Shepard & Co. v. Hall, 5 Neb. 194; M ler v. R. R. Co., 7 Neb. 227; Stone v. Neel 34 Neb. 81, 51 N. W. 314; Reynolds Tecumseh, 48 Neb. 785, 67 N. W. 792; H County v. Smith, 49 Neb. 274, 68 N. W. 4

It is recommended that the appeal be d missed.

HASTINGS and OLDHAM, CC., concur

PER CURIAM. The conclusions reach by the Commissioners are approved, and appearing that the adoption of the reco mendations made will result in a right de sion of the cause, it is ordered that the peal be dismissed.

MUCHMORE v. GUEST.

(Supreme Court of Nebraska. Dec. 4, 190

JUDGMENT—COLLATERAL ATTACK.

1. There is a well-marked distinction m tained between judgments rendered in wh there has been no service of summons at and those rendered where there has been ser of summons irregularly made. In the for class the judgment may be collaterally impe ed, but in the latter the defect is waived un directly assailed.

Commissioners' Opinion. Department 2. Error to District Court, Gage Cou Letton, Judge.

*Rehearing denied November 18, 1903.

¶ 2. See Appeal and Error, vol. 2, Cent. Dig. § 481.

¶ 1. See Judgment, vol. 30, Cent. Dig. §§ 926,

Digitized by Google

"Not to be officially reported."

Action by James A. Guest against Ellen T. Muchmore. Judgment for plaintiff, and defendant brings error. Affirmed.

F. N. Prout, for plaintiff in error. A. H. Babcock, for defendant in error.

OLDHAM, C. This was an action in ejectment in the district court of Gage county, Neb., instituted by the plaintiff below for the recovery of the possession of certain lots situated in the village of Liberty, Gage county, Neb. A jury was waived, and trial was had to the court, and judgment was rendered for the plaintiff, and defendant brings error to this court.

It is conceded that the common source of title from which each of the litigants claim is F. M. Muchmore, who is conceded to have been the owner of the premises in dispute at and prior to the 27th day of August, 1885. Plaintiff claims title under a sheriff's deed dated March 3, 1888, executed under an order of sale issued by the district court of Gage county, Neb., on a judgment entered in said court on the 16th day of November, 1887. This judgment was rendered by the district court on an action prosecuted by plaintiff, James A. Guest, against F. M. Muchmore and defendant, Ellen T. Muchmore, and John S. Muchmore, Jr. The action was in the nature of a creditors' bill, and sought to charge the lands in dispute with the payment of a judgment which the plaintiff, James A. Guest, had procured against F. M. Muchmore and W. F. Richards in the district court of Gage county, and to cancel a deed to the premises in dispute executed by F. M. Muchmore and defendant, Ellen T. Muchmore, and delivered to John S. Muchmore, Jr., on the 27th day of August, 1885. Defendant claims title under a quitclaim deed executed and delivered to her by John S. Muchmore, Jr., on the 1st day of December, 1896. It appears from the testimony in the record that after the delivery of the sheriff's deed to plaintiff, in 1888, he entered into the possession of the premises in dispute, and occupied them continuously, by his tenants, until some time in the year 1896, when, during a temporary vacancy of the premises, the defendant took possession, and subsequently procured the quitclaim deed on which she now asserts title. Her contention is that the judgment of the district court in favor of the plaintiff and against F. M. Muchmore and W. H. Richards was void, because F. M. Muchmore was improperly served with process in that cause of action. While we do not think this objection is material, in view of the conclusion we shall reach on an examination of the record and judgment in the creditors' bill proceeding, yet, as this objection is strongly urged by counsel for defendant in an able brief, we shall examine it briefly. It appears from the record that, when the cause of action on which the judgment at law was rendered against F. M. Muchmore and W. H. Richards, the first summons issued was returned by the sheriff of Gage county, Neb., with service upon W. H. Richards, but without having found F. M. Muchmore within the county. It also appears from the record that an alias summons was issued to the sheriff of Gage county, Neb., against F. M. Muchmore. This summons was in proper form, and bore the following return: "Received Apr. 27, 1886. As commanded by the writ I summoned the witness named April 27, 1886, F. M. Muchmore, by delivering to him a certified copy. Wm. Montgomery, Guide Park precinct, Constable." F. M. Muchmore did not appear in this cause of action, and judgment was rendered against him on the 27th day of September, 1886, for the sum of $614.06 and costs. While the return to this summons was informal, and might have been successfully attacked by special appearance, before judgment, yet, in the absence of a clear showing that no service of summons was had at all on F. M. Muchmore, the judgment rendered on such irregular service cannot be collaterally impeached. There is a well-marked distinction maintained by the decisions of our own court between judgments rendered where there has been no service of summons at all, and those rendered where there has been service irregularly made. In the former class the judgment may be impeached by collateral attack, but in the latter the defect is waived, unless assailed in a direct proceeding before judgment. Gilbert v. Brown, 9 Neb. 90, 2 N. W. 376; Seward v. Didder, 16 Neb. 58, 20 N. W. 12; Holliday v. Brown, 33 Neb. 657, 50 N. W. 1042; Gandy v. Jolly, 35 Neb. 711, 53 N. W. 658, 37 Am. St. Rep. 460; Campbell Printing Press & Mfg. Co. v. Marder, 50 Neb. 283, 69 N. W. 774, 61 Am. St. Rep. 573.

An attack is made on the judgment in the creditors' bill proceeding for the alleged reason that there was no proper service of summons in this case on Jno. S. Muchmore. This judgment was by default, and the court found, among other things, that "due personal notice of the filing and pendency of this petition was given to the defendants according to law." This finding of the court is attempted to be impeached by the return of the summons as to the service on Jno. S. Muchmore. The summons bore the following indorsements: "Summons. District court. Doc. H. No. 2254. Page 191. James A. Guest, Plaintiff, against F. M. Muchmore, et al., Defendants. I hereby depytize L. J. Palmer to serve this within writ. E. F. Davis, Sheriff. A. V. S. Saunders, Clerk, D. C. By E. E. Worrall, Depy. Filed May 26, 1887. State of Nebraska, Gage County, ss. Received this writ on the 20th day of May, A. D. 1887, and on the 22nd day of May, A. D., 1887, I served the within summons on the within-named John S. Muchmore by delivering to and leaving with the said John S.

Digitized by Google

Muchmore a true and certified copy of this writ, together with all the endorsements thereon. All done in Gage county, Nebraska. Witness my hand this 22nd day of May, 1887. ——, sheriff, L. J. Palmer, Deputy. Fees. Service $.50. Copy .25. Mileage 2.60. Total $3.35." The only objection urged against the return of this service is the fact that the return was not verified by L. J. Palmer. This objection, however, is one of a mere irregularity in the return, which could have been raised in a direct attack, but is not available in a collateral action. Larimer v. Wallace, 36 Neb. 444, 54 N. W. 835.

These are all the contentions on which defendant relies for a reversal of this cause. It is therefore recommended that the judgment of the district court be affirmed.

POUND and SEDGWICK, CC., concur.

Affirmed.

MOORE v. STATE.

(Supreme Court of Nebraska. July 3, 1903.)

SALOON KEEPER—ALLOWING GAMING—INFORMATION.

1. An information under section 217 of the Code of Criminal Procedure of 1901 must set out the names of the parties allowed to play the games complained of, if known to the prosecutor, or allege that they are unknown if such is the fact.

(Syllabus by the Court.)

Commissioners' Opinion. Department No. 3. Error to District Court, Custer County; Sullivan, Judge.

George Moore was convicted of crime, and brings error. Reversed.

C. H. Holcomb and N. T. Gadd, for plaintiff in error. F. N. Prout, Atty. Gen., Norris Brown, Dep. Atty. Gen., and A. R. Humphre- for the State.

DUFFIE, C. The plaintiff in error was informed against under section 217 of the Code of Criminal Procedure of 1901, for allowing games to be played at a saloon of which he was the proprietor. The information does not name the parties who were allowed to play, nor does it allege that such parties are unknown. He was convicted, and fined, and now prosecutes error.

Sections 216 and 217 of our Criminal Code were copied from an Ohio statute approved March 12, 1831. At an early day the Supreme Court of Ohio held that "an indictment for permitting gambling must recite the parties or allege that they are unknown." Davis v. State, 7 Ohio, 205, pt. 1. It is true that the indictment in that case was brought under the section corresponding to section 216 of our Criminal Code, but it is apparent that the same necessity existed for naming the parties, if known, in a charge brought under section 217, as when brought under the preceding section. The highest court of the state from which the statute was adopted having passed upon the question, the presumption obtains that the legislature of this state in adopting the statute did so in the light of the construction given it by the Supreme Court of Ohio, from which it was borrowed.

The information was defective in the respect named, and we recommend a reversal of the judgment.

KIRKPATRICK and POUND, CC., concur.

PER CURIAM. For the reasons stated in the foregoing opinion, the judgment of the district court is reversed.

STULL v. STULL.

(Supreme Court of Nebraska. June 19, 1901.)

TRIAL — INSTRUCTIONS — PROBATE OF WILL—UNDUE INFLUENCE—ARGUMENT OF COUNSEL—INSTRUCTIONS — DEPOSITION — OBJECTIONS—MENTAL CAPACITY—EVIDENCE.

1. When, in course of a trial, certain written documents pertinent to the issues have been identified and authenticated by the oath of one of the parties, and at his instance received in evidence, it is not error for the court, as a part of the instructions in the case, to tell the jury that it is right and proper for them to consider the documents, because they are important evidence bearing upon one of the matters of dispute, and to include in the instruction a statement that the genuineness or authenticity of the documents has not been denied by the other party to the suit.

2. An instruction which is an accurate and complete statement of the law, as bearing upon one phase of a matter in litigation, is not erroneous because it is not coupled with another equally accurate and complete statement of the law concerning another and distinct, though somewhat related, phase of the same matter.

3. When, in a contest over the probate of an alleged will, it is charged that the proponent procured the execution of the instrument by the exercise of undue influence, it is not error for the court to refuse to instruct the jury, in substance, that the mere facts that the circumstances were such that the proponent, who is a son of the testator, might, if he had chosen, have exerted such influence, and that he was named as executor of the will, and his wife was made one of the beneficiaries thereunder, raise a presumption of undue influence, which the proponent must remove by a preponderance of evidence, or else the instruction will be void.

4. It is not error to permit counsel for one of the parties, while addressing the jury, to read a part of his argument, a version of the evidence professedly prepared by himself. So long as he does not misquote or misrepresent the evidence, it is immaterial whether his speech is extemporaneous or previously prepared, in whole or in part, and written down.

On Rehearing.

5. Where an instruction contains nothing prejudicial in its charge, it will not be condemned because it is not couched in the best selected words to accurately express its meaning.

6. Influence, to vitiate a will, must be such as to amount to force and coercion, destroying the free agency of the testator, and there must be proof that the will was obtained by this coer

¶ 1. See Gaming, vol. 24, Cent. Dig. §§ 266, 267.

cion; and it must be shown that the circumstances of its execution are inconsistent with any hypothesis but undue influence, which cannot be presumed, but must be proved, and in connection with the will, and not with other things. Latham v. Schaal, 41 N. W. 354, 25 Neb. 535, followed.

7. Where an entire deposition is not asked to be suppressed, the customary method of procedure is to wait until the deposition is offered in evidence before objections to certain questions and answers, contained in the deposition, are passed upon; but this is not an inflexible rule, and where nothing but irrelevant and improper testimony is stricken from a deposition the action is without prejudice, whether done before or after it is actually offered in evidence.

8. Declarations and admissions of a want of legal capacity of the testator can only be shown when made by a sole legatee under the will; but the declarations of one who is an executor, and not a sole legatee, are not admissible as against the rights of the other legatees.

9. No belief that has any evidence for its basis is in law an insane delusion.

10. The prima facie showing of mental capacity of a testator, made by the testimony of the witnesses to the will, is not overcome by the proof that the testator was old, feeble in health, and almost blind, and that his mind was not so strong as formerly.

11. Evidence examined, and *held* insufficient to show undue influence.

The trial court in its instructions may properly limit evidence, admitted, but capable of misapplication, to those issues to which it is legally applicable. Per Pound, C.

It may also instruct the jury that in passing on a particular issue, which is one of the ultimate issues of fact to be found, they may consider this or that piece of evidence, so long as undue prominence is not given thereto. Per Pound, C.

But it is error for the court to lay hold of some particular piece of evidence, and point out its probative relation to a number of collateral circumstances and incidental questions not primarily in issue, but only bearing on the ultimate issues of fact. Per Pound, C.

A verdict which is clearly right upon the law and the evidence should not be set aside by reason of error of the court in giving undue prominence to certain evidence in its instructions. Per Pound, C.

Commissioners' Opinion. Department No. 3. Error to District Court, Nemaha County; Ramsey, Judge.

"Not to be officially reported."

Action by John S. Stull against William Stull. Judgment for plaintiff, and defendant brings error. Affirmed.

C. C. Flansburg, for plaintiff in error. S. P. Davidson, G. W. Cornell, and Kelligar & Ferneau, for defendant in error.

ALBERT, C. As respects its legal character, this is a litigation concerning the probate of a will. Let it be said at the outset that in the following opinion the writer will not concern himself with an attempt to ascertain who, among the active participants in the contest, is most censurable for want of filial regard and natural sympathy and affection for a father who, until his death at the advanced age of 85 years, was, judging by the record at least, the intellectual and moral peer of any of his progeny whom he reared and educated, and of whom the three who have engaged in and are carrying on this controversy have attained prominence and influence in this state. Of the more than 1,400 pages of typewritten matter comprised in the record in this case, by far the greater part has but little, if any, relevancy to the matters really at issue, and not a little consists of scandalous criminations and recriminations between the litigant parties, having no tendency to serve the ends of justice. Notwithstanding the extravagant volume of the record, the questions presented for review in this court are neither many nor difficult of solution.

For more than half a century prior to June, 1895, Lefler Stull had been a resident of the state of Illinois, and at that date moved to Auburn, Neb., and became an inmate of the home of his son, John S. Stull, where he remained until his death on the 7th day of April in the following year. On the 10th day of the same month the said son filed and offered for probate, in the county court of Nemaha county, the instrument in controversy, purporting to be the last will of his father, and to have been executed in said county on the 9th day of the preceding September. Soon afterwards, William Stull, another son of the decedent, filed objections to the probate of the instrument as the will of his father, upon the following grounds: "(1) The court has no jurisdiction. (2) The deceased was not of sound and disposing mind. (3) That said will was procured to be made and was made by undue influence of the proponent, John S. Stull." The court overruled the objections and admitted the instrument to probate, and the contestant, William Stull, appealed from the judgment to that effect to the district court for Nemaha county. In the district court, a trial of the cause was had to a jury, which resulted in a verdict, and consequent judgment, upholding the jurisdiction of the court and establishing the instrument as the last will of the decedent. From that judgment the contestant prosecutes error to this court.

The issues in the district court were not different in character from those in the court below, but more fully stated. The objection to the jurisdiction was founded upon the contention on the part of the contestant that the decedent was not, at the time of his death, a resident or inhabitant of Nemaha county, he not having had, at the time of his removal thereto or since, either the intention, or the mental capacity to form one, to exchange his former residence in Illinois for the home of his son. Under the circumstances of the case, this question is involved in the second and third objections, and is to be determined, for the most part, by the same evidence. All three are questions of fact, and, upon the most favorable view for the plaintiff in error that can be taken of the record, the evidence with respect to each is conflicting. In accordance with a long-established rule, this court will not, after a verdict by a

Digitized by Google

covering all the issues of fact in a cause, examine the record for the purpose of attempting to ascertain upon which side conflicting evidence preponderates.

The controversy here is narrowed to the inquiry whether the court committed any reversible error during the progress of the trial or in submitting the issues to the jury. In support of the objection as to mental capacity, the contestant introduced evidence tending to show that for a period of 25 years next previous to his death the decedent had been incapable of intellectual composition, and the correct apprehension of his circumstances and the grasp of mental propositions, and that afterward, and at the time of the alleged execution of the will, this imbecility, together with physical weakness and impaired eyesight, had incapacitated him from reading and understanding written documents, raising the presumption that he was, or might have been, ignorant of the contents or purport of the instrument in controversy. In rebuttal of this evidence, the proponent produced and identified, as being in the handwriting of his father, a series of letters addressed to and received by him at intervals during the period named. The genuineness of the letters was not denied by any witness, unless the above-mentioned evidence, consisting of the opinions of witnesses with respect to the mental and physical condition of the deceased, can be regarded as a denial by inference.

In regard to these letters the court instructed the jury as follows: "The court further instructs you that in arriving at your verdict it is right and proper for you to consider the eleven letters offered in evidence by proponent as the letters of Lefler Stull, deceased. There has been no attempt on the part of the contestant to disprove the evidence that they were the letters of the deceased, and were written and mailed at times detailed in the testimony; and if you believe that they were, respectively, the letters of said deceased, then they are important for you to consider in arriving at your verdict on the following points: First, as to the ability of the deceased to write; second, as to the ability of the deceased to compose; third, as to the ability of the deceased to see; fourth, as to the mental capacity of said Lefler Stull, deceased; fifth, as to the feelings entertained by the deceased toward his son, John S. Stull, at the time said letters were written, respectively."

It is claimed that this instruction was erroneous, because, by calling attention specially to these letters, it gave them undue prominence as evidence, and because by the use of the word "important" it indicated that the court regarded them as of peculiar, at least, considerable, weight as evidence bearing upon the issue of the case. We are unable to concur in either objection. The trial of causes would be rendered extremely difficult, if not impossible, if the presiding judge should be rigidly forbidden to remind the jury of the propriety of considering certain items of evidence which had been introduced upon the trial, or to tell them upon what particular matter in controversy such items had a bearing. Indeed, it is often of the highest importance to the ends of justice that he should do so, lest evidence that is important and material as to certain matters in dispute only should be mistakenly supposed by the jury to be entitled to consideration in the determination of other matters to which it had no relevancy. That is what this instruction does, and no more. It says to the jury: "It is right and proper for you to consider these letters, because they are important; that they have a bearing and significance on and concerning certain alleged facts, the existence of which is in dispute." Nor do we think that the mere statement that the genuine character of the letters was undisputed renders the instruction argumentative or prejudicial to the plaintiff in error. There was no expression of opinion by the court as to their degree of weight, or as to which side of the controversy they would help or hinder. The principal matter in dispute was the mental condition of the decedent at a certain period in his life. The instruction says, in effect: "Gentlemen, here is a partial intellectual sketch or portrait of the deceased, which one party has sworn is accurate; and his testimony is undisputed. It was drawn by his own hand. It is right and proper for you to examine it, and see what features you can make out, because upon the character of some of these features your solution of certain of the questions in litigation depends." The instruction is not, therefore, in conflict with the opinion of this court in Bank v. Lowrey, 36 Neb. 290, 54 N. W. 568, or with Murphey v. Virgin, 47 Neb. 692, 66 N. W. 652.

The court gave to the jury another instruction, being instruction No. 12 in the record, the correctness of which, as a complete and accurate statement of a proposition of law applicable to the case, is undisputed. But the plaintiff in error excepts because it was not coupled with another proposition, as it might have been without error, and to his possible advantage. But so long as the court committed no error in what he did say, the plaintiff has no ground of complaint. If the court had refused to give the plaintiff's proposition in its charge to the jury, upon request so to do, the case would have been different.

The court also gave the following instruction: "You are instructed that the material question for you to determine is whether, at the time the will in controversy was executed, the testator was of sound mind and understood the business he was doing at that time. If the testator was of sound and disposing mind and memory, and acted voluntarily at the time he executed the will in controversy, it is immaterial what the condi-

Digitized by Google

tion of his mind was before and after that time." This instruction is excepted to on the ground that there is a "vast mass" of evidence to show that the decedent for years had been of unsound mind and subject to insane delusions, and that a condition of insanity, shown to have once existed, will be presumed to continue until the contrary is proved, and that the instruction should have been coupled with this latter proposition of law. But the "mass" of evidence did not necessarily establish that the deceased was ever insane. There was an equal "mass" to the contrary, and it was for the jury to say which was of the greater weight. Besides, as the court told them by the instruction in question, if they found he had the testamentary capacity at the time of executing the instrument in suit, it was unnecessary to decide whether he had been insane at some previous time.

The plaintiff in error complains that the court erred in refusing to instruct the jury that the testimony of subscribing witnesses is not, solely on account of their being such, entitled to a greater weight upon the question of competency than is that of other witnesses. The proposition is so clearly self-evident that it is impossible to understand how the giving or withholding of the instruction could have affected the result in any way.

The plaintiff in error excepts to the refusal of the court to give at his instance the following instruction: "The court instructs the jury that the existence of undue influence is very seldom susceptible to direct and positive proof. It is established by all the facts and circumstances surrounding the testator. And if the jury find, from the evidence in this case, that the testator had been of irresolute and feeble mind, under the control or dictation of the proponent, his son, dependent upon him for his living as a member of his household, and further find, from the evidence, that confidential relations existed between the testator and the proponent, John S. Stull, that the said proponent, John S. Stull, prepared or caused to be prepared the will in question, dictated the same to his private stenographer, selected witnesses in his employ to attest the will, and, after its execution, he concealed the making of the will, and kept the same in his possession until after the decease of the testator, and you further find that the said will, so dictated and prepared by the said proponent, John S. Stull, made himself the executor thereof, and his wife a beneficiary thereunder, then the court instructs you that such facts raise the presumption of undue influence, and cast upon the proponent the burden of proving to your satisfaction by a preponderance of the evidence that said will was the free and voluntary act of the testator, and was not induced by coercion, or forced on the part of the said proponent, either directly or indirectly."

The instruction is poisoned by a virulent form of the very vice of which the plaintiff in error mistakenly accuses the instruction first in this opinion quoted. His counsel cite no authority in support of their contention, and, although they say that the books are full of them, we confess our ignorance of their existence. We cannot see why every act recited in the proposed instruction is not consistent with the most innocent, and even laudable, intent; and from such facts we have yet to learn that the courts raise an inference of fraud so strong as to cast the burden of removing it by a preponderance of evidence upon the assumed guilty party. The law does not presume that a man has done wrong from the mere fact that he had an opportunity for so doing, and to weigh motives and the influence of interest and prejudice is the peculiar province of the jury. Some of these circumstances, if they existed, offered an opportunity for the exercise of undue influence, and the bequest of the wife might or might not, according to the influence of other circumstances, have furnished a motive for its exertion. They might properly enough have been called especially to the attention of the jury, together with a statement that they are proper to be considered in connection with the question at issue; but this was all the plaintiff in error could ask, and was as far as the court could properly go. Their weight, as in other instances discussed by counsel, was for the jury to determine.

Plaintiff in error complains that the court withheld from the jury certain proposed testimony tending to show that in 1870 and 1871, a quarter of a century before the making of the will in question, the testator, by reason of his real or supposed physical disease, and of distress of mind produced by his social and domestic surroundings, suffered from hypochondria and depression of spirits, and harbored what the witness is pleased to call "hullucinations" with respect to the lack of sympathy and esteem manifested toward him by the members of his family. The writer not only agrees with the trial court that the proposed evidence was too remote to have any appreciable bearing upon the issues being tried, but holds that a lack of acute sensibility on the part of the deceased at that time to the treatment to which he was daily subjected by those to whom he had a natural right to look for sympathy and support in his affliction would have been strong evidence of an abnormal mental constitution. The attempt to prove by the same witness that at or about the same time the proponent, another son, was guilty of unfilial language toward his father, could have served only to further befoul the record to no useful purpose.

There is no merit in the objection that counsel for proponent was permitted to read, as a part of his address to the jury, a version, professedly written by himself, of parts of the evidence produced at the trial. There

Digitized by Google

is no rule that would have prevented him from preparing beforehand and reading his entire argument, had he willed to do so. Whether the address was oral or written, all that was incumbent upon the court in the premises was to see that the attorney did not misquote or misrepresent the evidence. This seems to have been done by admonishing counsel "to confine himself to the evidence." Counsel for plaintiff in error do not point to any specific disregard of this admonition, or any particular inaccuracy of statement in which opposing counsel indulged.

There are 330 other assignments in the petition in error, which counsel for plaintiff in error refers to in his brief as being classifiable into groups; those of each group being, as he supposes, subject to some special criticism common to them all. As counsel lacks either the confidence or the industry requisite for a more specific indictment, the court will not grope among the groups in quest of errors which, if they exist, might easily escape detection in the absence of a more careful guide.

We find no reversible error in the record, and therefore recommend that the judgment of the district court be affirmed.

AMES and DUFFIE, CC., concur.

Affirmed.

On Rehearing.

(Feb. 6, 1902.)

Commissioners' Opinion. Department No. 2.

OLDHAM, C. The issues in this case are fairly and fully set forth in the former opinion by ALBERT, C. At the earnest solicitation of counsel for the contestant, a re-examination of this voluminous record has been directed. In the brief filed by contestant on rehearing we are asked to further consider the conclusion reached in the former opinion on the action of the trial ourt in giving paragraph 21 of instructions on its own motion. (This is the instruction with reference to the Lefler Stull letters, offered in evidence by the proponent, and copied in full in the former opinion.) It is strongly urged by counsel for the contestant that the trial court erred in saying, in this instruction: "There has been no attempt on the part of the contestant to disprove the evidence that they were the letters of the deceased, and were written and mailed at times detailed in the testimony; and if you believe that they were, respectively, the letters of the deceased, then they are important for you to consider in arriving at your verdict on the following points," etc.

We have re-examined that part of the record that refers to the admission of these letters, and find it in brief to be: That proponent, John S. Stull, testified that he has been acquainted with the handwriting of his father, Lefler Stull, for 30 years, and that these letters are in his handwriting. That he received the letters offered in evidence, in the ordinary manner, through the post office, either in Brownville or Auburn, Neb. When the first one of these letters was offered in evidence counsel for the contestant was permitted to cross-examine the witness concerning the offer before the same was admitted, and when he had finished his cross-examination he said: "We have no objections to this letter, except that it is immaterial." And this was the only objection interposed to any of these letters. Counsel for contestant now assert that the evidence which they had previously offered with reference to the condition of the eyesight of the deceased showed it to be physically impossible for him to write at the time that these letters were received by the proponent. This contention rests on a most extravagant exaggeration of the effect of the testimony which they had offered as to the condition of the eyesight of Lefler Stull during the times at which these letters were written. The most that their evidence showed was that his eyesight was defective, and that he could not read small print. So far from showing that his eyesight was so defective that it would be impossible for him to write, their evidence shows that he not only could, but did, write and sign a pleading which was filed in a lawsuit pending in Illinois after he came to Nebraska.

Again, all that this instruction told the jury was that there had been no attempt to disprove the evidence that these were the letters of the deceased, and were written and mailed at times detailed in the testimony; and it does not tell them that there was no attempt to disprove the evidence that these letters were actually written by Lefler Stull himself, but, on the contrary, it leaves it to the jury to determine whether these were, respectively, the letters of said deceased, before giving them any consideration.

The use of the word "important" in this instruction is again severely criticised by counsel for the contestant. While it might have been better for the trial court to have used some other word, as, for instance, the word "relevant," or the word "competent," in this instruction, yet this contention is at most but a verbal criticism of the charge given to the jury, and an effort to predicate error on the letter of its construction, and not on any harmful result that followed from it. It is a sound maxim that "he who sticks to the letter sticks in the bark." We are unable to discover any good reason for changing the conclusion reached with reference to this instruction in the former opinion.

We are also asked to re-examine the holding in the former opinion on the refusal of the trial court to submit contestant's request for an instruction which sought to change the burden of proof on undue influence from the contestant to the proponent. We have examined the conclusions reached in the for-

Digitized by Google

mer hearing on this question, and are satisfied that they are builded on the rock. Any other conclusion would have been in plain conflict with the doctrine announced by this court in Latham v. Schaal, 25 Neb. 535, 41 N. W. 354, in which it is said: "Influence, to vitiate a will, must be such as to amount to force and coercion, destroying the free agency of the testator, and there must be proof that the will was obtained by this coercion, and it must be shown that the circumstances of its execution are inconsistent with any hypothesis but undue influence, which cannot be presumed, but must be proved, and in connection with the will, and not with other things." We see nothing that should change in any respect the decision reached in the former opinion on the action of the trial court in giving or in refusing instructions.

It is next urged that there was error in the action of the trial court in excluding certain questions and answers from the depositions taken by contestant, on objections filed by proponent, before these depositions were offered in evidence. The matter seems to have arisen in this manner: When some of the depositions taken by contestant had been placed on file, proponent filed objections to certain questions and answers contained in these depositions before the trial began, and sought to obtain a ruling on these objections before the depositions were offered in evidence. It appears from the record that, after these objections were filed by proponent, contestant's leading counsel was not present, and his other counsel agreed with the attorneys of the proponent that a jury might be drawn and excused, and these matters disposed of before the jury was again called into the box. Under this arrangement the court took up the objections and sustained such of them as were well taken.

Where an entire deposition is not asked to be suppressed, the customary method of procedure is to wait until the deposition is offered in evidence before objections to certain questions and answers contained in the deposition are passed upon. But this is not an inflexible rule, and, where nothing but irrelevant and improper testimony is stricken from a deposition, the action is without prejudice, whether done before or after it is actually offered in evidence. In this case the testimony stricken from the contestant's depositions was all of a character which tended only to degrade and humiliate the proponent, and was not responsive or material to any fact properly in issue in this case; and after a careful examination of the evidence excluded we hesitate to even criticise the action of the trial court in fumigating these depositions before they were offered in evidence.

It is next contended that the trial court erred in excluding testimony offered by contestant tending to show statements alleged to have been made by the proponent, John S. Stull, with reference to the mental condition of the testator. An examination of the will offered for probate shows that the proponent, John S. Stull, is not a legatee under the will; but, on the contrary, he is executor and heir at law of the testator. Declarations or admissions of a want of legal capacity of the testator can only be shown when made by a sole legatee under the will; but declarations of an executor who is not a sole legatee are not admissible as against the rights of other legatees. Ames v. Blades (Iowa) 2 N. W. 408; Renaud v. Pageot (Mich.) 61 N. W. 3.

It is finally contended by contestant that an examination of the testimony contained in this bulky record shows that the verdict in the lower court was clearly against the weight of the evidence. It is first contended that the testimony clearly shows the existence of insane delusions or hallucinations in the mind of the testator with reference to his property and the objects of his bounty, which must have affected his will. This theory is most favorably presented, on the part of the contestant, in the testimony of Lewis Stull, who said: "He was a monomaniac. He had three hallucinations—two growing out of the one, originally, that he had some sort of fatal disease, and was going to die with it. * * * And out of this grew that hallucination, which he always had, that my mother set the children against him, to have no sympathy for him; and, following this, the other hallucination was that there was a Scotch clan that was against him. * * * His real affliction was a severe headache. I would call it a a 'sick headache,' only that he frequently ate hearty meals when he had it; but that affliction was real, and it was intense. It occurred, as I remember it, not regularly—perhaps once a month; I would guess at that—and then I was convinced that he suffered intensely, and we all sympathized with him. He would groan, sometimes for a day or two at a time, so that we could hear him all over the house, except at night, when his bedroom door was closed." The existence of each of the alleged delusions described in this testimony was detailed by other witnesses called by the contestant. The whole case, as far as insane delusions are concerned, is bounded by the outline contained in the testimony just quoted from.

It will first be noted that in this outline there is nothing that tends to show any aberration with reference to the kind or extent of his property, nor is there anything that tends to show any false notions as to who the natural objects of his bounty are. The delusion, if any, of the testator as to his health, could only affect his will, in so far as it would tend to generally destroy his mental capacity. The bias or prejudice which the evidence shows that he manifested toward a Scotch clan could only affect such of the objects of his bounty as he imagined were in some way connected with this clan; and the evidence shows that the member of his family that he suspected of being in

Digitized by Google

league with the Scotch clan was his wife, who had departed this life long before this will was written, and had therefore ceased to be an object of his bounty. A careful examination of the testimony of the record with reference to these alleged insane delusions leads us to the conclusion that they, at the most, were but absurd notions, and not insane delusions of such a character as to destroy testamentary capacity. No belief that has any evidence for its basis is, in law, an insane delusion.

Now, examining each of these alleged insane delusions in the light of the evidence in the record, we find, with reference to testator's theory of a Scotch clan, that there were a number of Scotch settlers in his neighborhood; that the deceased had had trouble with two Scotchmen about getting a right of way for a road over their land; that he believed these Scotchmen wanted his land, and exacted an enormous price from him for the right of way, to compel him to sell his land to them for less than it was worth; and from this circumstance he concluded that the Scotch clan was inimical to him, and he in turn became hostile to them. Now, while this was undoubtedly an absurd notion, yet it did have some evidence for its basis, and in this it fell short of an insane delusion. The testator's belief that his wife was of Scotch descent, although born in Ireland, appears from the evidence to be based on the fact that her maiden name was Hutchinson, which he thought indicated a Scotch ancestry.

Now, with reference to his belief that his wife had turned the children against him, this idea, while perhaps cruel and unjust, was not without some evidence for a basis; for the testimony clearly shows that in 1871 his sons, with the exception of Marinus, combined against him and coerced him into deeding his home place to his wife, by threatening to apply for a conservator of his estate unless he did so. The only reason that they allege for this was that he had signed a bond for his son Marinus and a note for one of his neighbors. The evidence clearly shows that after this the deceased became, as one of the contestant's witnesses said, "dissatisfied," and left his home, and resided from that time, until he came to the home of his son, John S. Stull, in 1895, among strangers. It is also in evidence that his children neglected him, and seldom, if ever, recognized him in any manner for several years after he had left his old home. During this time it is in evidence that he complained of the neglect of his children and blamed his wife for it. When a man, stricken in years and suffering from bodily infirmities, has been long taught, like King Lear, to feel

> "How sharper than a serpent's tooth it is
> To have a thankless child"

—the fact that he complains of neglect is not sufficient to establish an insane delusion. The rule with reference to insane delusions is well stated in Underhill on the Law of Wills, at page 126, where he says: "Th the fact that the testator believed that relatives have ill-treated him, or that th are inimical to him, and have conspired defraud him, and for that reason leaves property to strangers, does not constitute insane delusion, unless it appears that his lief is wholly without any basis whatev and that the testator has obstinately persi ed in it against all argument which m have been employed to dissuade him. there are any facts, however little evident force they may possess, upon which the t tator in reason may have based his belief, will not be an insane delusion."

The evidence offered by contestant tendi to show a general want of testamentary pacity, because of the age and physical firmities with which the deceased was fected at the time the will was execut is unsatisfactory and insufficient in ma particulars. The most that it shows is advanced age of the deceased; he being years old at the time the will was execut It also shows that from 1885 to 1892 the ceased suffered intense pain from a canc ous eye, which had to be removed, and t the sight of the other eye was considera impaired. It shows that during some peri of his life he was unable to attend to ordinary business affairs, and that his ion was imperfect. But the overwhelmi weight of the testimony is that his men faculties were well preserved for one of years. There is no testimony that he o forgot the name of one of the natural jects of his bounty, or that he ever failed recognize the extent and kind of his pr erty. The rule is that although the tes tor may be weak and infirm, yet if he sufficient mental capacity to know the jects of his bounty, the extent of his pr erty, and the effect of his will upon his pr erty, this is all that is required to consti testamentary capacity. In O'Connor v. M ison (Mich.) 57 N. W. 105, it is said: "T prima facie showing of mental capacity o testator, made by the testimony of the w nesses to the will, is not overcome by proof that the testator was old, feeble health, and blind, and that his mind was so strong as formerly."

The charge of undue influence is, in judgment, entirely unsupported by any su cient evidence. The evidence shows clea and unmistakably that before the making the will now offered for probate the dece ed had made two former wills. The first which he made was executed in 1885. T will, after providing for small bequests the church and Masonic lodge of which was a member, disposed of the residue his estate to his great-grandchildren. In 1 he added a codicil to this will, by which disposed of the residue of his estate to living heirs of Marinus and John S. St these being his only grandchildren. He a provided in this codicil that his unmarr

daughter, Jane Stull, should be supported if she became needy. In 1894, he made another will, which simply redeclared the provisions of the codicil of his former will, and made proponent, John S. Stull, one of the executors. It is conceded that each of these former wills were made without any knowledge or interference on the part of John S. Stull. The will of 1894 provided that none of his real estate should be sold within a period of 20 years from his death. The will of 1895 is essentially the same as the will of 1894, except that it gives a specific bequest of one-fourth of his estate to his unmarried daughter, Jane Stull, and gives three-eighths of the estate to the children of Marinus Stull, and the other three-eighths to the wife, instead of the children, of John S. Stull, and makes John S. Stull the sole executor, and removes the provision that his real estate should not be sold for 20 years. So that, to our minds, there is nothing in the provisions of the last will itself to suggest the exercise of undue influence over the testator by proponent, John S. Stull, and this is the only evidence on which that charge rests.

While a careful examination of the record in this case discloses some technical errors in the admission of testimony, which might be criticised, yet we find nothing prejudicial in this regard, and we are firmly convinced that no good ends would be accomplished by granting a new trial. This gruesome family skeleton dance is ended now, and the further use of the courts of this state as a theater for its reproduction should be denied.

We therefore recommend that the former opinion in this case be adhered to.

BARNES, C., concurs. POUND, C., concurs in the result.

POUND, C. To my mind the most serious questions in this case are with reference to the instruction of the court concerning the alleged letters of the testator and the refusal of an instruction requested by contestants as to the burden of proof of undue influence.

It is well settled that it is error to charge the jury that certain testimony is "strong evidence," or a "circumstance of great weight," or entitled to "strong consideration." First Nat. Bank v. Lowrey, 36 Neb. 290, 54 N. W. 568; Murphey v. Virgin, 47 Neb. 692, 66 N. W. 652; Bourquin v. Bourquin (Ga.) 35 S. E. 710. On the other hand, it has been held proper to instruct that the number of witnesses and their concurrence in support of a particular statement is "of material importance" in passing upon their credibility. Bisewski v. Booth (Wis.) 76 N. W. 349. And in Hansberger v. Sedalia Electric Ry. Co., 82 Mo. App. 566, "important" in an instruction of this nature was held to be equivalent to "material," and hence to refer to a question of law, not to one of fact. But it seems to me that all attempts to lay down a hard and fast rule that this and that word are proper, and this and that word improper, in such a connection, must fail. It has sometimes seemed that all of the old-time subtlety of the law, driven out of pleading, had merely transferred the scene of its operations to the instructions of the trial court, and that the fine-spun distinctions and nice differences which we urge with respect to the charge have as little relation to anything substantial as the questions of duplicity, departure, and variance with which our predecessors had to struggle. There ought to be general principles by which to test instructions, rather than too many hard and fast rules, and they ought to be applied with reasonable liberality upon a view of the charge as a whole. Granting this, I am unable to concur in the view that the instruction given was proper. It is undoubtedly in the power of the court, and, indeed, its duty, to limit evidence, which might be capable of misapplication, to those issues upon which it is legally applicable. This is a function of the court. It is one of the legal questions arising upon the evidence. It is also proper for the court to lay before the jury all the legal rules by which evidence is to be weighed as a matter of law. Thus, rules as to the burden of proof, as to presumptions of law, and the like, are binding legally upon the jury, and should be stated to them. But it is no less clear that many considerations by which the court would be governed in settling questions of fact, such, for instance, as the well-known statement of Greenleaf with respect to evidence of admissions, have no proper place in the charge of the court. The jury are to judge of the issues of fact in their own way; that is, by the ordinary, natural tests of common sense and reason, and not by an artificial standard growing out of judicial experience. When, therefore, the court tells the jury that certain evidence, if believed, is material on this or that issue, but not on some other, or that in passing on a particular issue it may consider this or that evidence, a rule of law is enunciated; and I should have no quarrel with the charge if the word "important" chanced to be used, rather than the more accurate word "material," in a proper case. But it is another matter entirely for the court to lay hold of some particular piece of evidence, and point out its probative relation to a large number of collateral circumstances and incidental questions of fact. To say that its materiality to any of the ultimate issues of fact may be pointed out does not say that its bearing upon each or any of the subordinate problems presented by the evidence, through which the jury are to reach a conclusion upon such issues, is a proper subject of comment by the court.

The instruction complained of in the case at bar tells the jury that certain letters, if believed to be the letters of the testator, are important to consider "on the following points:

Digitized by Google

First, as to the ability of the deceased to write; second, as to the ability of deceased to compose; third, as to the ability of deceased to see; fourth, as to the mental capacity of said Lefler Stull, deceased; fifth, as to the feelings entertained by the deceased toward his son, John S. Stull, at the times said letters were written, respectively." To my mind, this instruction is improper and objectionable from every point of view. It would have been within the powers of the court entirely to say that these letters might be considered, in connection with all the other evidence in the case, upon the issue as to the testator's mental condition; for that was one of the ultimate issues of fact. It would have been allowable to charge that the feelings of testator toward his son John S. Stull might be considered upon the issue of undue influence. But what portions of the evidence proved such feelings, and their nature and character, was for the jury, not for the court. Whether the testator could read, whether he could write, how far he could compose, were not issues to which the court could direct its charge. They were incidental questions raised by the testimony, from which light might be obtained upon the ultimate questions of fact. To pick out this one matter, and explain its relations to all these incidental and minor problems presented to the jury by the evidence, was to bring the instruction squarely within the mischief aimed at the rule against giving undue prominence to particular portions of the evidence. That is a rule capable of abuse, if applied too strictly. But, if it has any just foundation at all, it derives it from instructions such as this, wherein the court assumes part of the work of the jury, instead of confining itself to its own sphere of laying down the pertinent rules of law. For these reasons I am constrained to think that the instruction was erroneous.

Upon the other question, I think the ruling of the trial court was correct. But it seems proper to point out that there may be cases where the facts and circumstances are so suggestive of undue influence as to raise a presumption thereof which a proponent would be required to overcome. Ordinarily the burden of proving undue influence is on the contestants, and they must show a state of facts consistent with no other hypothesis. But where the disposition of the testator's estate is not just or reasonable, in view of the circumstances proved, the beneficiaries thereof are active agents in procuring its immediate execution, and the evidence in connection with the situation of the parties strongly suggests fraud and undue influence, and calls for close scrutiny of the transaction, the burden is upon the proponent to overcome any presumption of fact arising from such circumstances. Disch v. Timm, 101 Wis. 179, 77 N. W. 196, and cases cited. I do not think the evidence brings this case within that rule, but I should not wish to state the general rule so broadly as to give rise to a impression that it had to be overlooked.

What course should be taken, then, in vi of the erroneous instruction first consider In an ordinary case, a reversal must follo But I do not feel justified in recommend such judgment in the case at bar. I beli that all the evidence bearing upon the iss that would be likely to come before a co and jury upon a new trial is before Upon that evidence I am satisfied that verdict is right and just. I do not believ different result would be reached upon a n trial, or, if it was reached, that it would likely to be allowed to stand. This co has held more than once that it would not verse a judgment under such circumstan Jeffres v. Cashman, 42 Neb. 594, 60 N. 895; Everett v. Hobleman, 15 Neb. 376, N. W. 452. I therefore concur in recomme ing that the former judgment be adhered

Former judgment in this case adhered

NATIONAL MUT. BLDG. & LOAN AS v. RETZMAN et al.

(Supreme Court of Nebraska. July 8, 190

CONTRACTS—CONSTRUCTION—MORTGAGE PURCHASE OF EQUITY—USURY—ESTOPPEL.

1. Contracts made in this state, by resid of this state, with foreign building and associations, such contracts being made thro agents of such associations located in this st are Nebraska contracts, and their construct validity, and enforcement are governed by laws of this state.

2. The rule that the purchaser of the eq of redemption, who purchases subject t mortgage, and who deducts from the purc price sufficient to pay such mortgage, is estop to defeat the mortgage on the ground of us is not applicable when the vendee and the m gagor, at the time of sale, agree that the cumbrance is tainted with usury, and ther retained out of the purchase price only eno to pay the incumbrances, less any usurious alties.

3. Evidence examined, and *held* that def ant was not estopped to set up the plea usury.

4. Evidence examined, and *held* to sustain judgment.

(Syllabus by the Court.)

Commissioners' Opinion. Department 1. Appeal from District Court, Harlan Co ty; Adams, Judge.

Action by the National Mutual Building Loan Association against Ferdinand Retzm and others. Judgment for defenda Plaintiff appeals. Affirmed.

C. M. Miller, for appellant. John Ever and Gomer Thomas, for appellees.

KIRKPATRICK, C. On December 1900, the National Mutual Building & L Association of New York, a foreign corpo tion, filed in the district court of Har county a petition making Ferdinand Retzm and Magdalena Retzman, his wife, defe

Digitized by Google

ants, alleging its corporate existence under the laws of the state of New York; that it was authorized to transact business of a building and loan association, and its authority to do business in the state of Nebraska; that in June, 1890, Alice G. Simms made application in writing for membership in plaintiff association, and subscribed for 20 shares of plaintiff association's stock, which application was accepted, and the shares issued; that in July, 1890, Alice G. Simms, as such member, applied for a loan of $2,000, which was granted, payable in installments, the last payment to be made on completion of certain buildings, as stipulated in her application; that on March 13, 1891, Alice G. Simms gave a bond mortgage and assignment of her shares of stock to plaintiff to secure the payment of her loan. From the petition it appears that the mortgage bond contained the usual stipulations and conditions that upon failure to pay as therein agreed the whole principal sum, including arrearages of interest, premiums, dues, and fines, at the option of the mortgagee, became due and payable; contained the description of certain lots in Alma, Neb., the property mortgaged. The petition alleged failure on the part of Alice G. Simms and the defendants Retzman to pay certain monthly dues of $10 from January to March, 1899; that three months had elapsed since default; that plaintiff elected to consider the whole amount of $2,000 due and payable, including interest at 6 per cent. from January, 1899, together with a monthly premium of $10 from March 13, 1899, amounting on June 1, 1900, to $170 and $24.33 premiums, subject to the application thereon of the value of the aforesaid shares in accordance with a collateral agreement in the bond that upon default in the stated payments said shares might be canceled, and their maturity value applied on the loan; it was agreed that the withdrawal value of these shares was, on June 1, 1900, $1,296; that said shares were canceled, and the amount mentioned applied on the loan; that no proceedings had been had at law; that there remained due $898.13. The petition alleged the conveyance of one-half interest in the premises covered by the mortgage by deed from Alice G. Simms and her husband, B. M. Simms, on March 1, 1895, to defendant Ferdinand Retzman, subject to plaintiff's mortgage; that Retzman, on July 24, 1896, conveyed his undivided one-half to Magdalena Retzman, his wife, subject to plaintiff's mortgage; that on March 7, 1898, Alice G. Simms conveyed her remaining one-half to her husband, B. M. Simms; that on March 15, 1898, Simms and wife conveyed this remaining one-half to Ferdinand Retzman, subject to plaintiff's mortgage. The plaintiff further alleged that by accepting this deed from Ferdinand Retzman, subject to plaintiff's mortgage, Magdalena Retzman was estopped from setting up the defense of usury against the mortgage; that by accepting the deed from Simms subject to the mortgage, Ferdinand Retzman was estopped in the same manner; closing with a prayer for judgment. Ferdinand Retzman answered, admitting the execution of the mortgage for $2,000; that Alice G. Simms subscribed for the shares of stock as alleged, but for the sole purpose of obtaining the loan; pleaded that the mortgage was a Nebraska contract, and that Alice G. Simms agreed to pay for the use and forbearance of the money loaned the sum of $240 per annum; admitted that on March 1, 1895, he bought a half interest in the mortgaged premises, Simms and wife warranting the title to be free of all incumbrances except plaintiff's for the sum of $1,237; admitted that he agreed to assume half this indebtedness, and thereafter paid his share upon the indebtedness at the rate of $240 per annum; that under this agreement he paid and plaintiff received and accepted the sum of $1,388; alleged that on March 15, 1898, he purchased of the Simmses the other half interest, agreeing to pay the amount remaining due upon the mortgage, not to exceed $85, and that as sole owner he paid to plaintiff $236; admitted the cancellation of the shares, but alleged that he had not received full credit therefor; alleged that Alice G. Simms and B. M. Simms had confederated and conspired with plaintiff to compel defendants to pay a large amount on the mortgage, although plaintiff and Simms well knew its usurious character; and that the failure of plaintiff to make the Simmses defendants was part of the conspiracy; prayed that the Simmses be made defendants, an accounting and disclosure of the assets of plaintiff, and cancellation of the mortgage with the decree that it had been fully paid. Magdalena Retzman's answer denied generally, and pleaded that at the time of the creation of the alleged liability she was under coverture. Alice G. Simms and B. M. Simms filed a joint answer and cross-petition, alleging the transfer of March 1, 1895, of one half interest, and of March 15, 1898, of the other half interest, to Retzman; his assumption of plaintiff's mortgage; that at the time of the second transfer the stock of goods was valued at $1,033.50, the interest of the Simmses being $516.75; the value of the real estate was $2,000, the interest of the Simmses being $1,000—making the total interest of the cross-petitioners $1,516.75, which was by Retzman to be paid for the interest of the cross-petitioners; that he paid $1,000, assuming to pay $500 on the mortgage; that he had paid thereon only $118. They accordingly prayed that, if the court find nothing due to plaintiff from Retzman, he be adjudged to pay to the cross-petitioners the sum of $382. They denied all allegations in both petition and Retzman's answer not admitted. Retzman's reply to the cross-petition denied generally. Plaintiff replied to Retzman's answer, pleading that the contract sued upon was a New York contract, and not subject

Digitized by Google

to the usury laws of Nebraska. Trial was had, and the court found generally for defendants Retzman, and dismissed both the petition of plaintiff and cross-petition of Alice G. and B. M. Simms. From this judgment the building and loan association and the cross-petitioners, Alice G. and B. M. Simms, prosecute appeal.

A brief outline of the evidence may conveniently be given before stating the contentions of the several parties to this appeal. In 1895 B. M. Simms was engaged in the retail drug business at Alma, Neb., the business being carried on in a building located on lots owned by his wife, Alice G. Simms. The real estate was mortgaged as alleged in the pleadings. In March, 1895, Ferdinand Retzman purchased from the Simmses a half interest in the real estate and drug business. The deed from Simms to Retzman contained this clause: "This conveyance is subject to an indebtedness of twelve hundred thirty-seven dollars in favor of National Mutual Building & Loan Association of New York, and one half of said amount grantee herein assumes and agrees to pay as part of the consideration herein named." The parties continued to do business as partners, apparently, under the name of the "Simms Drug Company," for some three years. In the course of time, however, the partnership proved highly unsatisfactory to both Retzman and Simms, and various attempts were made to separate, culminating on March 15, 1898, in the acceptance by Simms of an offer of $1,000 by Retzman for the former's half interest in all the real estate and drug business. Thereupon a deed was executed by B. M. and A. G. Simms to Ferdinand Retzman conveying the half interest belonging to Simms for a consideration of $1,000, the deed containing the following clause: "This conveyance is made subject to a certain mortgage given by first parties to National Mutual Building & Loan Association, of New York, for the sum of $2,000, on which a large amount has been paid, second party assuming balance unpaid, which may be found to be due."

Appellant makes two principal contentions: (1) That the contract sued on is a New York contract, and, tested by the laws of that state, is not usurious; (2) that appellees Retzman, purchasers of the equity of redemption, cannot set up usury as a defense, because such defense is personal to the borrower, and appellees purchased subject to the mortgage of appellant. The contention of the cross-petitioners Simms is that the trial court erred in not decreeing Retzman should pay to them the sum of $382, inasmuch as his liability to them in that sum is a logical deduction from the conclusion that Retzman was without liability to appellant because the mortgage was usurious.

The first contention of appellant can scarcely be sustained. There is no question whatever made that, if tested by the laws of this state, the contract was indisputably usurious, and that at the time of bringing this suit the whole principal sum, with legal interest, had been more than paid. The only question, therefore, is whether the contract was a New York or Nebraska contract. It was doubtless the latter. Alice G. Simms was a resident of Alma, Neb. Appellant is a corporation of New York state. The contract was made by an agent of appellant located at Alma, Neb., and we must hold the contract a Nebraska contract, under the test applied in People's Bldg., Loan & Savings Ass'n v. Shaffer (Neb.) 88 N. W. 669, namely: "Contracts made in Nebraska, with residents of this state, by a foreign building and loan association, if made by agents of such association within this state, are Nebraska contracts, and their construction, validity, and enforcement are governed by the laws of this state."

Appellant cites Cheney v. Dunlap, 27 Neb. 401, 43 N. W. 178, 5 L. R. A. 465, McKnight v. Phelps, 37 Neb. 858, 56 N. W. 722, B. & L. Ass'n v. Walker, 59 Neb. 456, 81 N. W. 308, and many cases from other states in support of the second contention that appellee Retzman, not being a privy to the contract with A. G. Simms, but only the purchaser of the equity of redemption, cannot plead the defense of usury. We think the authorities are very clear to the effect that usury is a defense personal to the borrower, his privies or representatives, to be waived by him, but only available to him, and not to one who purchases his equity recognizing the validity of the mortgage, and retaining from the purchase price a sum sufficient to pay such mortgage in full. The reason of the rule is not far to seek. Equity declares that the purchaser under such circumstances shall not be permitted to get a larger estate than he bargained for. The rule is based on the universal requirement of good faith; so that, when the owner of the equity of redemption permits a reduction from his interest of the full amount of the usurious incumbrance, he never intends this as a gift or concession to his vendee, but as a waiver of the personal defense of usury; and when the vendee takes subject to the full incumbrance, including the usury, he forfeits the defense of usury, because he has already gotten all he bargained for, and the defense of usury would give him more than that, namely, the amount deducted from the purchase price by the owner of the equity upon the belief that the full amount of incumbrance would be paid. Equity will not aid a purchaser to get an estate at a less price than he has agreed to pay for it. Hence it is stated in Hough v. Horsey, 36 Md. 181, 11 Am. Rep. 484, cited by appellant herein, which was an attempt by the purchaser of the land subject to a mortgage alleged to be usurious to escape payment of the usury: "If the mortgage debt were to be reduced on the present

Digitized by Google

application by reason of the alleged usury in the contract, it is manifest the complainant would get the estate purchased for less than she agreed to pay for it." The rule is similarly stated in a quotation from 27 Am. & Eng. Enc. of Law (1st Ed.) 952, made by appellant. The inquiry, accordingly, is whether Retzman and Simms, at the time of the second transaction, by which Retzman acquired the half interest theretofore held by Simms, had in mind the usurious character of the incumbrance, and intended that there should be deducted from the purchase price only enough to pay the incumbrance, less usury. It is established by the evidence that at the time of the conveyance to Retzman of March 1, 1895, the amount of the indebtedness was understood by all parties to be $1,237, as stated in the deed of that date, and that by accepting the conveyance Retzman agreed and assumed half of this indebtedness, with the full understanding as to its amount and the terms and conditions under which it was to be paid. Thereafter, and until March 15, 1898, the partnership paid regularly $32 monthly to the local agent of appellant. In March, 1898, when the efforts of the parties to separate were about coming to fruition, and it was agreed that Retzman should buy Simms' interest, an attempt was made by the parties and those representing them to figure out the amount still due to appellant association upon the mortgage. All of the evidence on the part of the appellee Retzman points clearly to the conclusion that Retzman, in assuming by the contemplated conveyance to him the sum still due on the mortgage, had in mind only the principal loan and interest at lawful rates under the usury laws of this state, assuming that the contract was highly usurious, and that in no event would he or Simms be liable beyond the principal and interest divested of usurious penalties. We do not hesitate in saying that from this same evidence and other evidence in the record it is fairly inferable that Simms also understood that the conveyance to Retzman contemplated the assumption by the latter of the amount due less any sum tainted with usury. In the evidence on behalf of appellees Retzman it is claimed that the computation resulted in ascertaining that there remained due on the mortgage a sum not exceeding $100, possibly not more than $85. There is evidence also in the record that the deed of conveyance last made in 1898, as originally drawn, contained a specific provision that Retzman should not be liable on the mortgage beyond the sum due, less any usurious penalties, but that this provision was stricken out or erased, and the words, "assuming balance unpaid which may be found to be due," inserted in their stead, upon the suggestion of Simms himself, who explained that, because of a personal feeling of kindness because of good treatment from appellant towards him in the past, he did not care to have the obnoxious provision remain in the deed, as stated by one witness, who made the alteration, "in black and white." B. M. Simms was called on behalf of cross-petitioners, but, as we read his testimony, it fails to produce upon our minds any doubt as to the truth of the evidence already set out, which was doubtless credited by the trial court.

We think that no other conclusion can fairly be drawn from the evidence than that the parties, at the time of their last negotiations in March, 1898, both treated appellant's mortgage as tainted with usury, and that under the laws of this state the original mortgage would not have been obligated to pay more than the principal sum, with legal interest; and, further, that Retzman, in taking the latter conveyance, was retaining out of the purchase price only enough to pay "the balance which may be found to be due," without usury. The difference in the wording of the assumption clauses in the two deeds goes to sustain this view. In Essley v. Sloan, 116 Ill. 391, 6 N. E. 449, it is said: "It would be inequitable, after the purchaser has obtained the benefit of the incumbrance by deducting the amount thereof from the consideration paid for the land, to permit him to keep it to himself, and not apply it to the purpose for which it was set apart and reserved in his hands." In Wiltsie on Mortgage Foreclosures, § 395, it is said: "It is a general rule that a purchaser whose conveyance is, by its terms, made subject to a mortgage, the amount of which is deducted as part of the consideration of the purchase, whether he expressly assumes it as part of the purchase money or not, cannot plead usury as a defense to the foreclosure of such mortgage." We think from what has already been said it will be apparent that the doctrine announced in the citations just made is inapplicable to the facts in this case. In the Essley Case the decision is based in equitable considerations, namely, that the purchaser shall not be permitted to divert to himself money left in his hands by his grantor for another purpose. In the quotation from Wiltsie the foundation of the rule is said to be the deduction from the purchase price of the amount of the mortgage. The facts in this case bring it within the doctrine as announced in Maher v. Lanfrom, 86 Ill. 514: "If a party purchases from a mortgagor without any deduction from the price on account of the incumbrance, he thereby becomes invested with the right to interpose the same defenses as might have been made by the mortgagor. In such case the conveyance amounts to an authority to the purchaser to interpose the defense of usury. We fail to discern any conflict between these decisions. There was a deduction from the purchase price paid by Retzman because of appellant's mortgage, but the language in the deed, as well as the evidence, amply show that this deduction did not, and was not intended to, include usurious interest, and, if it did not,

Digitized by Google

then Simms never waived the defense of usury and intended that Retzman should have the advantage thereof. If in the transfer of Simms' half interest there had been deducted the full amount of appellant's mortgage, including all charges that entered into its usurious elements, there would be manifest inequity in permitting Retzman to defeat the mortgage for usury. If, on the contrary, no such deduction was made, but only a deduction sufficient to pay the loan with legal interest, less credits, there is no injustice in Retzman's plea of usury. We conclude that the judgment of the trial court as between Retzman and appellant, dismissing the latter's petition, is right.

With reference to the demand of the cross-petitioners, Alice G. and B. M. Simms, for judgment in their favor against appellee Retzman in case the court determines that appellee is not liable on appellant's mortgage, it follows necessarily, from the conclusion already reached, that in denying their prayer the judgment of the trial court is also right. It was the theory of the cross-petitioners that there was a deduction from the purchase price on account of this incumbrance in the sum of about $500, and, as Retzman had paid only $118 to appellant, according to one computation, he was liable to them for the difference between the amount retained out of the purchase price for the payment on the mortgage and the amount paid thereon. The evidence wholly fails to sustain this theory. On the contrary, the evidence shows that Retzman paid more than the parties at the time of the transfer agreed was still due.

It is therefore recommended that the judgment of the trial court be in all respects affirmed.

HASTINGS, C., concurs.

PER CURIAM. For the reasons stated in the foregoing opinion, the judgment of the district court is affirmed.

PARKER v. PARKER et al.*

(Supreme Court of Nebraska. July 3, 1903.)

EQUITY—FRAUD OF PLAINTIFF—DISMISSAL OF ACTION.

1. Evidence examined, and *held* sufficient to sustain the judgment of the trial court.

Commissioners' Opinion. Department No. 1. Error to District Court, Gage County; Stull, Judge.

"Not to be officially reported."

Action by Frank H. Parker against Lewis C. Parker and others. Judgment for defendants, and plaintiff brings error. Affirmed.

Geo. M. Johnston, for plaintiff in error. Griggs, Rinaker & Bibb, E. O. Kretsinger, and Doyle & Berge, for defendants in error.

OLDHAM, C. This case is an aftermath grown from the stubble of Sheldon v. Parker (Neb.) 92 N. W. 923. In the former case the contest was between the trustee in bankruptcy of the estate of Lewis C. Parker, Maude Lord Parker, his wife, and others, for the purpose of subjecting the lands now in dispute, and other property, to the payment of the debts of the bankrupt. A full history of the dealings and transactions between Frank H. Parker, plaintiff in the present case, and Lewis C. Parker and wife, with reference to the lands in dispute, is contained in the opinion of this court in Sheldon v. Parker, supra. After Sheldon v. Parker, supra, had been instituted in the district court of Gage county, the present cause of action was instituted by Frank H. Parker against Lewis C. Parker and Maude Lord Parker, the trustee in bankruptcy of the estate of Lewis C. Parker, and others, for the purpose of canceling a deed executed by the plaintiff in this cause of action to Lewis C. Parker to a one-half interest in about 16 acres of land, referred to in the record as the "Home Place," as having been procured without consideration, and by the fraudulent representations of the grantee. The petition also prayed for an accounting on a contract with Lewis C. Parker. Issues were properly joined upon this petition. Trial was had to the district court. Judgment was rendered dismissing plaintiff's petition for want of equity. A motion for a new trial was filed and overruled, and error proceedings have been instituted in this court for the purpose of reviewing this judgment.

No summons in error has been served upon defendants Lewis C. Parker and Maude Lord Parker, and the only parties who have appeared in this court to answer this proceeding are the trustee in bankruptcy and other creditors. The only question called to our attention in the brief of plaintiff in error is as to the sufficiency of the evidence to sustain the judgment of the trial court. This allegation of error we will examine only so far as affects the judgment of the district court with reference to the trustee in bankruptcy and other claimants. Much of the testimony in the present case is identical with that commented upon by the learned commissioner who wrote the opinion in Sheldon v. Parker, supra. From this testimony it seems to fairly appear that the plaintiff in this cause of action knowingly and intentionally conspired with his brother, Lewis C. Parker, for the purpose of placing the lands now in controversy beyond the reach of either the creditors of Lewis C. Parker, or creditors of the estate of Hiram W. Parker and Elmira T. Parker, the ancestors from whom the property was inherited. When the contest began between the creditors of Lewis C. Parker and Maude Lord Parker, the plaintiff in this suit was ready with an affidavit and deposition tending to show that he had conveyed the premises now in dispute to Maude

*Rehearing denied October 21, 1903.

Digitized by Google

Lord Parker for a cash consideration, and that no indebtedness existed between him and his brother, Lewis C. Parker. In the present case he testifies that he executed the deed to Lewis C. Parker, and that the first name of his brother was written in pencil, and that this name was subsequently erased from the deed and the name of Maude Lord Parker inserted. We do not doubt that the latter statement is true, and that the former affidavit and deposition were false, but it clearly appears from the correspondence between these brothers that the present plaintiff knew the object of having the first name of his brother written in pencil, and knew that his brother was going to erase it and insert the name of some one else in its stead for the purpose of defrauding creditors. One who appears with his hands grimed to the wrists by such dubious transactions deserves no consideration from a court with a conscience.

It is therefore recommended that the judgment of the district court be affirmed.

AMES and HASTINGS, CC., concur.

PER CURIAM. The conclusions reached by the Commissioners are approved, and, it appearing that the adoption of the recommendations made will result in a right decision of the cause, it is ordered that the judgment of the district court be affirmed.

CITY OF SOUTH OMAHA v. TAYLOR.*

(Supreme Court of Nebraska. July 8, 1903.)

MUNICIPALITIES—DEFECTIVE STREETS—CONTRIBUTORY NEGLIGENCE—QUESTION FOR JURY—INSTRUCTIONS—VARIANCE.

1. That one injured in consequence of a defect in a street had knowledge of the defect beforehand does not per se establish negligence on his part, but ordinarily is merely one of the circumstances to be taken into account by the jury in determining whether there was a lack of due care.
2. On the facts shown in the opinion, *held*, that the question of contributory negligence was for the jury.
3. It is not error to refuse an instruction tendered, when the same ground is covered by an instruction given by the court on its own motion.
4. Record examined, and *held* that there is no variance between the allegations and proof, and that the verdict is sustained by sufficient evidence.

Commissioners' Opinion. Department No. 2. Error to District Court, Douglas County; Estelle, Judge.

"Not to be officially reported."

Action by John W. Taylor against the city of South Omaha. Judgment for plaintiff, and defendant brings error. Affirmed.

A. H. Murdock, for plaintiff in error. James M. Kerr and Martin Langdon, for defendant in error.

ALBERT, C. This is an action for damages for personal injuries alleged to have been sustained by the plaintiff by reason of the defective condition of certain sidewalks of the defendant city. The petition is in the usual form, and does not require further attention at this time. The answer, among other things, contained a denial of the injuries, and allegations showing contributory negligence on the part of the plaintiff. The affirmative matter in the answer is denied in the reply. There was a verdict and judgment for the plaintiff, and the defendant brings error.

The principal complaint of the defendant is based on the refusal of the court to give certain instructions, the first of which is as follows: "The jury are instructed that the evidence in this case shows that the plaintiff herein knew of the defect in the sidewalk complained of, if it existed, before the reception of his injuries, and that the evidence of both plaintiff and defendant shows that there was sufficient space in good condition on each side of said walk, and that the plaintiff might, in use of ordinary care and prudence, have passed over the defect, and thus avoided injury to himself; and you are further instructed that, by failing to use the way thus open to him to pass around the defect, the plaintiff herein did not use ordinary care in passing over the defect, by reason of which he was guilty of contributory negligence, and your verdict must be for the defendant." By the tender of the foregoing instruction, the defendant asked the court to say, as a matter of law, that the plaintiff was guilty of contributory negligence, and to withdraw that question from the jury. Ordinarily the question of negligence is for the jury, and it becomes a question of law only when the facts are undisputed, there is no conflict in the evidence, or when but one reasonable inference is to be drawn from the undisputed facts. Guthrie v. M. P. R. Co., 51 Neb. 746, 71 N. W. 722, and cases there cited. It is true, in this case, it is undisputed that the plaintiff had known of the defective condition of the sidewalk, and of a space at the side where he could have passed safely long before the accident occurred. But the accident occurred in the nighttime, and when there was snow on the ground, which was being blown about and into drifts by a considerable wind. There is evidence tending to show that the plaintiff was on the lookout for the defect which occasioned the injury, but, owing to the darkness, the snow, and the condition of the weather, he miscalculated the distance, and stepped into the opening before he was aware of its proximity. In view of these facts, we do not think it can be justly claimed that the only reasonable inference is that the plaintiff was guilty of negligence. Knowledge of the existence of a defect in a street does not, in itself, establish negligence on the part of a traveler who is in-

*Rehearing denied October 21, 1903.

¶ 1. See Municipal Corporations, vol. 36, Cent. Dig. § 1677.

Digitized by Google

jured in consequence of such defect. Neb. Tel. Co. v. Jones, 60 Neb. 396, 83 N. W. 197. That a traveler voluntarily attempts to pass along a highway, with knowledge of some defect therein, is not ordinarily conclusive evidence of a want of due care, but is merely one of the circumstances to be taken into account by the jury in determining whether he exercised such care as a reasonably careful and prudent man would have exercised under like circumstances. Elliott on Roads & Streets (2d Ed.) § 636. Whether the plaintiff in the present case exercised due care was clearly a question for the jury, and the court properly refused to withdraw that question from their consideration.

It also complains of the refusal of the court to give the following instruction: "The jury are instructed that a person has no right knowingly to expose himself to danger, and then recover damages for that which he might have avoided by the use of reasonable precautions; and if the jury believe from the evidence that there was a defect in the sidewalk, and that it was dangerous, and that plaintiff, before and at the time of the alleged injury, knew of the defect of the sidewalk, and knew that, by passing over that part of the sidewalk space immediately west of the alleged defect, he could have avoided all danger to himself, you will take that knowledge into consideration in arriving at a verdict, and, if you believe that by the exercise of ordinary care and prudence the plaintiff might have avoided injury by passing over the ground on either side of the defect, then you will find for the defendant." As a general statement of the law applicable to the facts in this case, we think the foregoing instruction is, perhaps, correct. But the instruction leaves it somewhat indefinite as to what facts would excuse the plaintiff for his failure to pass to one side of the defective portion of the walk. Had it been given, it would have been proper for the court to indicate, as far as the evidence would justify, what facts would excuse such failure. The court, on its own motion, gave the following instruction: "You are instructed that the testimony of the plaintiff discloses that at the time of the alleged injury he was familiar with the sidewalk at the place where he alleges that injury occurred, and was familiar with the existence, nature, character, and extent of the alleged defect therein, and that he frequently passed over and about said defect shortly before the date on which the injury is alleged to have been sustained. You are further instructed that, in the light of this testimony on the part of the plaintiff herein, the plaintiff cannot recover in this case unless he has proven to you by a preponderance of the evidence that at the time of or immediately before receiving the injury, if he did receive an injury, his attention was momentarily attracted elsewhere, and in this moment of forgetfulness he received the injury, or that the defect, if any, was so obscured, hidden, or covered by dar ness or otherwise that he was deceived, m taken, or misled, and while so mistaken, d ceived, or misled, and while in the exerci of ordinary care, he received the injury which he complains." A comparison of t foregoing instruction with the second instru tion tendered by the defendant will disclo that the former, down to the qualifyi clause, "unless he has proven," etc., is least as favorable to the defendant as t one tendered. It is a familiar rule that t refusal of the court to give an instructi tendered does not constitute error, where t same ground is fully covered by an instru tion given by the court on its own moti The foregoing instruction, down to the qua fying clause mentioned, covers the sa ground and is couched in as favorable la guage as that tendered by the defenda Hence the defendant has no just ground complaint that the theory covered by the struction tendered was not fully and fai submitted to the jury, unless it be with gard to the qualifying clause. But it do not claim that the instruction given by t court is erroneous, nor is any complaint ma of it either in the petition in error or in t brief. Hence the qualifying clause stands a part of the accepted law applicable to t facts in this case. Moreover, we think was justified by the evidence, because might reasonably be inferred therefrom th the plaintiff's attention was momentarily tracted elsewhere by the storm, the darkne snow, or other causes, or that the defect w so hidden by the darkness or covered by t snow that he was misled. We are satisfi that the instruction given is as favorable the defendant had a right to ask, and that was not error to refuse the second instru tion tendered.

Another reason urged for the reversal this cause is that there is a variance b tween the pleadings and the proof. Th point is not made very clear. It seems be based exclusively on the ground tha while the petition shows that at the pla where the injuries occurred the boards fro the sidewalk were taken up for the space from 20 to 30 feet, the evidence shows th the hole or defect in the walk which caus the injury was from but 2 to 4 feet in wid We do not understand counsel to claim th it would be necessary to show a defect the exact dimensions alleged in the petitio but rather that the only inference to drawn from the petition and the evidence that the injury must have occurred at so other place than that alleged in the petitio We are unable to concur in that view. T evidence is amply sufficient to show that t injury occurred at the point alleged in t petition. It is true, as stated by the defen ant, that, in order to permit the verdict a judgment in this case to stand, we must cept the testimony of the plaintiff as tr because no other person was present wh

Digitized by Google

the accident occurred. It is also true that there was some slight discrepancies in his testimony, but not more than usually occurs in the testimony of a witness detailing an occurrence of that kind, and they are in regard to immaterial matters. There is nothing to indicate that his testimony was willfully false in regard to any material point, nor that it was willfully false in respect to any point, for that matter. He was before the jury, who heard his testimony, and had an opportunity to observe his demeanor while testifying. They are the best judges of his credibility, and their verdict is fully sustained by the evidence.

The foregoing disposes of all the points urged for a reversal of the judgment of the district court. We find none of them sufficient to that end. We recommend, therefore, that the judgment of the district court be affirmed.

BARNES and GLANVILLE, CC., concur.

PER CURIAM. The conclusions reached by the Commissioners are approved, and, it appearing that the adoption of the recommendations made will result in a right decision of the cause, it is ordered that the judgment of the district court be affirmed.

CLARKSON SAWMILL CO. v. PATRICK.

(Supreme Court of Nebraska. Dec. 18, 1901.)

ACTION ON DRAFT—EVIDENCE.

1. Evidence examined, and *held* to support the verdict and judgment.

Commissioners' Opinion. Department No. 1. Error to District Court, Douglas County; Dickinson, Judge.

"Not to be officially reported."

Action by Clarkson Sawmill Company against A. L. Patrick. Judgment for defendant, and plaintiff brings error. Affirmed.

Warren Switzler, for plaintiff in error. Duffie & Van Dusen, for defendant in error.

DAY, C. The Clarkson Sawmill Company commenced this action in the district court of Douglas county against A. L. Patrick to recover a balance alleged to be due upon an accepted draft drawn by the plaintiff and accepted by the defendant. The draft was for the sum of $635, upon which there had been a payment of $135. The answer admitted the acceptance of the draft and the payment of $135, as alleged in the petition, but by way of defense charged that on October 23, 1894, the defendant executed and delivered to the plaintiff his promissory note for $500, due three years after date, secured by a mortgage upon real estate, and that the same were accepted by the plaintiff in full satisfaction and payment of the debt sued upon. The reply was a general denial. The trial resulted in a verdict in favor of the defendant, upon which judgment was rendered, to review which the plaintiff has brought the case to this court on error.

The principal error complained of is that the verdict is not sustained by sufficient evidence, and is contrary to law. The evidence discloses that in October, 1894, the defendant was financially embarrassed, and unable to pay his creditors, some of whom were pressing him for payment of their claim. On October 23, 1894, in order to avoid threatened litigation, and seemingly prompted by the best of motives, he attempted to make an adjustment with a number of his creditors by executing to them notes and giving security, and thus securing to himself an extension of the time of payment. Among others, he executed a note in favor of the plaintiff for $500, due and payable October 23, 1897, secured by a second mortgage upon real estate situated in the city of Omaha, and delivered the same to Rich & Sears, a firm of attorneys, who had other claims in their hands against the defendant, for the purpose of obtaining security. These attorneys notified the plaintiff by wire that their claim had been secured by a real estate mortgage, and requested the plaintiff to ratify their action. The plaintiff replied to this communication that its matters were wholly in the hands of Mr. Cady, and to advise with him. A conference was had between the attorneys and Mr. Cady with reference to the security, and, while the security was not considered sufficient for some reason, as the witness expressed it, "the matter was rather left hanging in the air, and the papers left in my possession." On November 19, 1894, Rich & Sears sent the mortgage to the plaintiff, and suggested that the plaintiff execute a release to Patrick, and also made the suggestion that, if it continued to hold the mortgage unreleased, Patrick might insist that the note and mortgage were accepted in payment of the claim. In response to this letter the plaintiff replied as follows: "Your favor of the 19th, inclosing mortgage, which you ask us to release, received, and both have been referred to Mr. H. C. Cady, of your place, who is our agent in the matter. You may confer with him, and see what he cares to do about executing release." The record also shows that some months afterwards Cady informed the defendant that he proposed to hold the mortgage for what it was worth. While the testimony offered was not clear and direct that the plaintiff had accepted the note in full settlement of the debt represented by the acceptance, there was, in our opinion, sufficient to warrant the jury in so finding.

We therefore recommend that the judgment of the district court be affirmed.

HASTINGS and KIRKPATRICK, CC., concur.

Affirmed.

Digitized by Google

CLELAND et al. v. ANDERSON et al.

(Supreme Court of Nebraska. July 3, 1903.)

BANKRUPTCY—PROPERTY—INTEREST IN PENDING SUIT.

1. Where the state statutes make a distinction between a plaintiff's interest in a pending action and his cause of action before suit brought, making the one assignable in cases where the other is not, the interest of a bankrupt in a pending action, which he might sell and assign, and of which his creditors might obtain the benefit on administration of his estate, is to be held "property," within the purview of subdivision 5, § 70, of the national bankruptcy act (Act July 1, 1898, c. 541, 30 Stat. 566 [U. S. Comp. St. 1901, p. 3451]), rather than a "right of action," under subdivision 6.

(Syllabus by the Court.)

Petition for rehearing denied.

For former opinion, see 92 N. W. 306.

POUND, C. The facts are stated at length in the former opinion. It may be desirable, however, to restate briefly the particular circumstances out of which the point argued upon this rehearing arises. Anderson had a cause of action for injury to his business, under section 11, c. 91a, Comp. St., against some seven joint tort feasors. He brought an action against three of them. Pending the action he became bankrupt, and listed his interest therein among his assets. In consequence, it was sold, along with his other property, and the purchaser made a settlement with the defendants. Afterwards he brought the present action against the other four tort feasors, who set up the settlement and satisfaction in bar. The question is whether the interest of the bankrupt in the pending action passed to the trustee, and thence to the purchaser, so as to enable the latter to make a settlement.

Section 70 of the national bankruptcy act (Act July 1, 1898, c. 541, 30 Stat. 565 [U. S. Comp. St. 1901, p. 3451]), by which this question must be determined, is not entirely clear. While doubtless intended to cover everything of value which ought to be applied upon the claims of creditors, it does so in a somewhat clumsy and confused form, which makes construction difficult. It provides that the trustee shall be vested with the title of the bankrupt to "all (1) documents relating to his property; (2) interests in patents, patent rights, copyrights, and trademarks; (3) powers which he might have exercised for his own benefit, but not those which he might have exercised for some other person; (4) property transferred by him in fraud of his creditors; (5) property which prior to the filing of the petition he could by any means have transferred or which might have been levied upon and sold under judicial process against him: provided, that when any bankrupt shall have any insurance policy which has a cash surrender value payable to himself, his estate, or personal representatives, he may, within thirty days after the cash surrender value has been ascertained and stated to the trustee by the company issuing the same, pay or secure to the trustee the sum so ascertained and stated, and continue to hold, own, and carry such policy free from the claims of the creditors participating in the distribution of his estate under the bankruptcy proceedings, otherwise the policy shall pass to the trustee as assets; and (6) rights of action arising upon contracts or from the unlawful taking or detention of, or injury to, his property."

We have no doubt that Anderson's right of action against Iddings, Birge, and Field, before suit brought, would not have passed, and that his cause of action against the defendants in the present action did not pass, to the trustee. Subdivision 6 clearly applies in each case, and as the right of action did not arise upon contract, nor from the unlawful taking or detention of or injury to the bankrupt's property, that subdivision leaves it in the bankrupt. But the question remains whether the interest of Anderson in the action pending against Iddings, Birge, and Field, at the time he became a bankrupt, as distinguished from his right of action before he brought suit, comes within the purview of subdivision 5, or is likewise to be governed by said subdivision 6. Ordinarily we should consider the one as standing upon the same ground as the other. The Code, however, makes a clear and important distinction between them; the interest of a plaintiff in a pending action surviving and passing to the personal representative, so as to be available to creditors, and hence becoming assignable and salable, in many cases where the cause of action before suit brought would abate. It would be an anomaly indeed if creditors of an estate could take advantage of rights not available to creditors of a bankrupt. A construction which would produce such an anomaly should be avoided if possible. We must look to the state law to see what the bankrupt might "by any means have transferred." Looking to the laws of this state, and finding that the interest in the pending suit here in controversy was transferrable, and that our laws distinguished it from a right of action not in suit, it would seem that this distinction should be borne in mind in construing the general language of the federal statute, which was meant to be adjusted to the many and diverse local laws and statutes of the several states of the Union, so as to subject all of the debtor's estate, not exempt or otherwise beyond the reach of creditors, to the payment of his debts. We think, therefore, that where the state statutes make a distinction between a plaintiff's interest in a pending action and his cause of action before suit brought, making the one assignable in cases where the other is not, the interest of a bankrupt in a pending action, which he might sell and assign, and of which his creditors might obtain the benefit on ad-

ministration and distribution of his estate, in case of his death, is to be held "property," within the purview of subdivision 5, rather than a "right of action," under subdivision 6. It may be said that subdivision 5 must be limited in meaning to tangible or corporeal property, by reason of the context, since subdivisions 2, 3, and 6 relate to particular species of incorporeal or intangible property. But subdivision 5 contains a proviso as to policies of life insurance which negatives this construction, and many valuable rights and species of intangible property have been held to come within its purview. In re Gaylord (D. C.) 111 Fed. 717; In re Wellin, 113 Fed. 189, 51 C. C. A. 151; In re Page, 46 C. C. A. 160, 107 Fed. 89, 59 L. R. A. 94; Moses v. Travelers' Ins. Co. (N. J. Err. & App.) 49 Atl. 720; In re Slingluff (D. C.) 106 Fed. 154; Waldron v. Becker, 33 Misc. Rep. 182, 68 N. Y. Supp. 402.

We therefore recommend that the former judgment be adhered to.

DUFFIE and KIRKPATRICK, CC., concur.

PER CURIAM. For the reasons stated in the foregoing opinion, the former judgment of this court is adhered to.

ROSSO v. MILWAUKEE HARVESTER CO.

(Supreme Court of Nebraska. Dec. 18, 1901.)

SALE—WARRANTY—ACTION FOR BREACH—APPEAL.

1. Evidence examined, and *held* sufficient to sustain the findings of the trial court.
2. Where the evidence sustains the findings, and the findings sustain a formal judgment rendered thereon, such judgment will not be reversed because of an erroneous conclusion of law deduced from the findings of fact, such conclusion being merely an expression of opinion by the trial court.

Commissioners' Opinion. Department No. 3. Error to District Court, Buffalo County; Sullivan, Judge.

"Not to be officially reported."

Action by Fred C. Rosso against the Milwaukee Harvester Company. Judgment for defendant, and plaintiff brings error. Affirmed.

Dryden & Main, for plaintiff in error. H. M. Sinclair and F. M. Hallowell, for defendant in error.

ALBERT, C. In 1894 the plaintiff agreed to buy a binder of the defendant on condition that it would do good work. With that understanding the binder was delivered to him. After the harvest of that season was over, when called upon to settle for the machine, he expressed some dissatisfaction with its work. Some negotiations followed, which resulted in a reduction of $5 on the price of the machine, and the execution of a contract in writing between the parties, of which the following is a copy: "Kearney, Neb., Aug. 4, 1894. This is to certify that I have agreed with Fred Rosso of Prairie Center, that the Milwaukee binder settled for this date does not do good work so far as the cutting of the grain, it did not cut the grain clean and I have agreed to make it do first class work in the season of 1895, and if it cannot be made to do good work a new binder will be given in place of it or the last two notes returned. [Sig.] Milwaukee Harvester Co., by C. D. Ayres, Agt."

This action was brought by the plaintiff to recover for an alleged breach of said contract. The court to which the case was tried made the following findings of fact: "The court finds, as a matter of fact, that the only trouble the plaintiff had with the machine, and which the machine failed to work during the first year, or 1894, was that it didn't leave smooth stubble and dragged down the grain to some extent, and left a small part of the grain uncut; that in every other respect the machine worked perfectly the first year; that at the time the settlement was made, on August 4, 1894, and the notes given, that this was the only thing concerning which the plaintiff made any complaint or found fault with, and at that time he made no complaint or found any fault that the machine did not bind well, or that it clogged up, or something caught and stopped it; that because of this difficulty in not cutting the grain clean, the defendant, in making settlement with plaintiff, threw off the sum of five dollars, and entered into a contract in regard to that defect that he would make the machine work all right and perfectly, and that, so far as this cause of complaint is concerned, the machine did work perfectly thereafter; that the cause of the machine's clogging up, or the cause of the machinery's failure to work, was from the wearing of the machinery about the binding part, and not because of any difficulty or defect in the manufacture; that at the beginning of the season of 1895, before the machine became badly worn, it did do good work in every respect."

From the foregoing findings the court deduced the following conclusion of law: "As a matter of law, the court concludes the contract was a guaranty only against the difficulty complained of by the plaintiff, to the agent of the defendant, at the time of the contract of August 4th was made, and was not a guaranty against any other difficulty or failure to work, and that the written contract did not guaranty against the alleged clogging up of the machine." A judgment in due form in favor of the defendant was rendered and the plaintiff brings the case here on error.

It is urged that the findings of the court are not sustained by sufficient evidence. As to the first and second findings, we do not deem it necessary to examine the record to determine that point, because, in our view

Digitized by Google

of the case, the third finding alone is sufficient to sustain the judgment. By the terms of the contract, the defendant bound itself to make the binder do good work in 1895. This was not a contract to keep it in repair, nor to indemnify the plaintiff against the wear and damage incident to its use, but to overcome the defects resulting from its faulty construction. The third finding, in effect, is a finding that the defendant performed its part of the contract, as thus interpreted; in other words, that there was no breach of contract. But the plaintiff insists that this finding is not sustained by sufficient evidence. We think otherwise. Among other items of evidence that would warrant this finding, is the clear and unequivocal statement of the plaintiff, in writing, given July 14, 1895, to the effect that the machine had been adjusted and operated to his entire satisfaction.

It is urged that the court erred in its conclusion of law. But we think it will not be contended that, where the evidence sustains the findings, and the findings sustain the judgment, such judgment should be reversed for the expression of an erroneous opinion by the trial court of the legal conclusions to be drawn from the facts found.

We recommend that the judgment of the district court be affirmed.

AMES and DUFFIE, CC., concur.

Affirmed.

PHŒNIX MUT. LIFE INS. CO. v. SPARKS.

(Supreme Court of Nebraska. Dec. 18, 1901.)

FORECLOSURE SALE—OBJECTIONS TO CONFIRMATION.

1. Objections made to the confirmation of a sale examined, and *held* insufficient.

Commissioners' Opinion. Department No. 3. Appeal from District Court, Buffalo County; Sullivan, Judge.

"Not to be officially reported."

Action by the Phœnix Mutual Life Insurance Company against James A. Sparks. Judgment for plaintiff, and defendant appeals. Affirmed.

B. O. Hostetler, for appellant. Wm. Gaslin, Saml. J. Tuttle, and Tibbets Bros. & Morey, for appellee.

DUFFIE, C. This is an appeal from an order of the district court confirming a sale of real estate made upon a decree of foreclosure. All the points discussed in the brief of appellant have been determined by this court in former decisions, with two exceptions, to which we will now call attention. It is objected that the notice of sale does not state the county in which the land is situated. A description of the land as contained in the notice is as follows: "Lots number seven (7), eight (8), nine (9), and ten (10), in section six (6), in twelve (12), range sixteen (16) west, of the 6th P. M." Land is frequently described by giving the section or particular part of the section, followed by the township and range in numerals, for example: "Southwest quarter (¼) of section ten (10), in 12-16." This, to every one acquainted with governmental survey of lands, would clearly indicate that the southwest quarter (¼) of section ten (10), in township twelve (12), of range sixteen (16), was intended. We do not think that the description was so defective that prejudice to the defendant will be presumed, in the absence of an affirmative showing.

It is next urged that the decree of foreclosure was entered at an impossible term of court, namely, at an adjournment of the September, 1896, term, held in January, 1897. The decree merely recites the date of its rendition, and does not state the term at which it was entered. There is no evidence in the record to support the contention of the appellant, except a recital made by the clerk in the order of sale issued by him. We cannot accept a recital of the clerk as evidence that the court entered a decree at a term illegally convened and held. Every presumption is in favor of the regularity of the proceedings of the court, and a mere recital made by the clerk, and which was not required by any statute or rule of practice, cannot overcome such presumption. Neither are we prepared to say that a term of court regularly convened in September may not continue over until the succeeding January, provided no regular term had been appointed to take place in January prior to that date of such continued or adjourned term. The decree in this case is fair upon its face. We cannot see from an inspection of the decree that it was entered at a term illegally convened or held. Such being the case, the defendant, if he had objections to urge, should have taken an appeal from the decree itself. We find no error in the record.

We therefore recommend the affirmance of the decree.

ALBERT and AMES, CC., concur.

Affirmed.

BEMIS et al. v. McCLOUD et al.

(Supreme Court of Nebraska. July 3, 1903.)

ERROR—QUESTIONS REVIEWED.

1. A plaintiff who has been defeated upon a trial in the court below by a general finding of issues of fact, upon petition, answer, and reply, in favor of his adversary, and who prosecutes error without having preserved the evidence in a bill of exceptions, and without having obtained a ruling upon a motion for a new trial, can assign but one ground of error in this court, viz., that the answer does not state facts constituting a defense to the petition.

2. An assignment of error not noticed in the brief will be deemed to have been waived.

Digitized by Google

Commissioners' Opinion. Department No. 1. Error to District Court, York County; Sornborger, Judge.

"Not to be officially reported."

Action by George W. Bemis and others against Charles A. McCloud and others. Judgment for defendants, and plaintiffs bring error. Affirmed.

George W. Bemis, for plaintiffs in error. F. C. Power and W. W. Wyckoff, for defendant in error.

AMES, C. This is an action to enjoin the authorities of the city of York from levying a special assessment upon certain real estate of the plaintiff to defray the expense of building a sidewalk adjacent thereto and along certain public streets. The action was tried in the district court upon issues joined by petition, answer, and reply, but the evidence was not preserved in a bill of exceptions; and, although a motion for a new trial was filed, it does not appear to have been ruled upon by, or called to the attention of, the district court. None of the pleadings was impeached, or sought so to be, in the lower court, by motion or by demurrer. The court found both specially and generally for the defendants, and dismissed the action.

The plaintiff seeks a review in this court by petition in error. Under these circumstances, it was possible for the plaintiff to assign but one ground of error in this court, viz., that the answer does not state facts constituting a defense to the petition. This he has not done, or, if his first assignment can be construed as equivalent thereto, he has waived it by making no allusion to it in his brief. We have, however, examined the answer, and are of opinion that it does state a defense, but do not feel called upon to enter upon a discussion of it.

It is recommended that the judgment of the district court be affirmed.

OLDHAM and HASTINGS, CC., concur.

PER CURIAM. The conclusions reached by the Commissioners are approved, and, it appearing that the adoption of the recommendations made will result in a right decision of the cause, it is ordered that the judgment of the district court be affirmed.

SWOFFORD BROS. DRY GOODS CO. v. COWGILL et al.

(Supreme Court of Nebraska. Jan. 8, 1902.)

PARTNERSHIP—EVIDENCE—QUESTION.

1. Evidence examined, and *held* sufficient to require submission to the jury of question of liability on the part of defendant in error, as partner, in the purchase of the goods for whose price the action was brought, and action of trial court in instructing for verdict for defendant therefore erroneous.

Commissioners' Opinion. Department No. 1. Error to District Court, Phelps County; Beall, Judge.

"Not to be officially reported."

Action by Swofford Bros. Dry Goods Company against J. F. Cowgill and others. Judgment for defendants, and plaintiff brings error. Reversed.

Rhea Bros. & Manatt and Ellis, Reed, Cook & Ellis, for plaintiff in error. Clancy St. Clair and G. Norberg, for defendants in error.

HASTINGS, C. The question in this case is the liability of the defendants Norberg and J. F. Cowgill for goods purchased by W. H. Cowgill and delivered to him under the name of J. F. Cowgill & Co. There is no evidence against J. F. Cowgill, except the fact that her husband bought these goods in her name, and put a bank account in her name, and drew checks on it in her name. There is no evidence against Norberg, except that of one of the attorneys for plaintiff, who testifies that in the year 1892, as agent for Dunn & Co., he received an inquiry at Holdrege, Neb., as to the firm of Cowgill & Norberg, "while the business was carried on at Tobias," and called, he thinks, upon Mr. Norberg, and in the conversation "it was stated that Mr. Norberg was connected with the business, and I so reported." This statement was made in answer to the question as to what the conversation was, and was stricken out by the court as not responsive. The question was repeated, and the answer was, "My recollection is—the best that I can give, that is—Mr. Norberg said they were carrying on the business down there, he and the Cowgills." It appears that from some time in May, 1892, until some time in November of the same year, a bank account was kept in the name of Norberg, at Tobias; that the account was opened by W. H. Cowgill in that name, and checked upon by him in that name, and in his own name, and in the name of J. F. Cowgill. It appears that goods were ordered by W. H. Cowgill in the name of G. Norberg, shipped to Tobias, and delivered in that name to W. H. Cowgill. It appears that, on October 3d, W. H. Cowgill in person purchased the goods sued for in this action, representing that J. F. Cowgill, his wife, and Norberg were partners in the transaction. It does not appear that either Norberg or J. F. Cowgill were during any of the time personally at Tobias, or had any connection with the transaction, except from these representations of W. H. Cowgill and the testimony above stated. The court rejected all evidence of the transaction as to the purchasing of the goods as against the defendants Norberg and J. F. Cowgill, and instructed the jury to return a verdict for these two defendants, and one against W. H. Cowgill for the price of the goods. This was done on the ground that no connection on the part of the defendants in error with the transaction was shown.

The sole competent evidence tending to show Norberg's liability as a partner in the

Digitized by Google

transaction of the purchase of these goods is the statement of James I. Rhea, above given. There is nothing else to show that G. Norberg was aware of the use being made of his name at Tobias, more than 100 miles from his home. With considerable hesitation it has been concluded that, in refusing to submit to the jury the question as to Norberg's liability as partner for these goods, the trial court erred, and that plaintiffs are entitled to a new trial in this cause.

It is recommended that the judgment of the district court be reversed, and the cause remanded for further proceedings.

DAY and KIRKPATRICK, CC., concur.

Reversed and remanded.

WOLCOTT'S ESTATE v. McCORMICK HARVESTING MACH. CO.

(Supreme Court of Nebraska. July 3, 1903.)

APPEAL—DISMISSAL—INCOMPLETE TRANSCRIPT—DIRECTING VERDICT.

1. Defendant in error appealed from a judgment rejecting its claim against the plaintiff in error. The defendant in error moved the district court to dismiss the appeal because the transcript brought up was not complete, instead of suggesting diminution of the record. *Held*, that the court had jurisdiction, and did not err in overruling the motion.

2. Record examined, and *held* to show no error on the part of the trial court, and that it properly directed a verdict for defendant in error.

Commissioners' Opinion. Department No. 2. Error to District Court, Webster County; Adams, Judge.

"Not to be officially reported."

Action by the McCormick Harvesting Machine Company against the estate of Sidney E. Wolcott. Judgment for plaintiff. Defendant brings error. Affirmed.

Overman & Blackledge, for plaintiff in error. Fred Maurer and Doyle & Berge, for defendant in error.

GLANVILLE, C. This is a petition in error from the district court of Webster county, alleging error in the trial and judgment in an appealed estate claim contest. The county court disallowed the claim of the defendant in error. Bond was given and approved, and the case taken to the district court. Plaintiff in error alleges error, and contends that the district court did not become possessed of the action, because of the insufficiency of the transcript. The transcript contained the judgment or order disallowing the claim, and was sufficient to confer jurisdiction. Some of the original files of the county court were filed with the transcript, without being certified to. That is not the proper practice. Such of the record as is needed should be brought up in the form of certified transcripts, but the plaintiff in error had a right to suggest a diminution of the record if anything not properly brought up was needed. Instead, he moved to miss the appeal, and, when the motion overruled, joined issue and went to t The district court had jurisdiction of the ties and subject-matter.

The claim was based upon a judgmen the county court of Webster county rend against the deceased in his lifetime, wl was not dormant, and appears to be in respects a valid, subsisting judgment in vor of the claimant, and it was prop proved. Plaintiff in error offered to prov contract, made with an unknown party cancel the judgment, which now amount over $900, for $20. The court ruled out evidence because no proof was offered connect the unknown party with the def ant in error. This ruling was right, bu left the defendant in error without any p of any defense. The court therefore pro ly instructed a verdict for defendant in e for the amount due on the judgment.

There is no error in the record, and judgment of the trial court should be firmed.

We may say here that the plaintiff in ror has been overzealous in the matte bringing up record. We have before u transcript of the petition and amended tion, the answer and amended answer, even certified copies of subpœnas and o useless papers. This practice makes n less costs, fills the archives of the clerk's fice with useless paper, and makes unne sary work for the reviewing court. A neys should endeavor to bring up " enough, and not any too much," of the ord.

We recommend that the judgment of lower court be affirmed.

ALBERT and BARNES. CC., concur.

PER CURIAM. The conclusions rea by the Commissioners are approved, an appearing that the adoption of the re mendations made will result in a right cision of the cause, it is ordered that judgment of the district court be affirme

---

HANSEN v. MORTENSEN et al.

(Supreme Court of Nebraska. Dec. 18, 19

MORTGAGE—FORECLOSURE—PETITION—PARTIES.

1. Petition examined, and *held* that the murrer thereto was properly sustained.

Commissioners' Opinion. Department 3. Error to District Court, Howard Cou Kendall, Judge.

"Not to be officially reported."

Action by Rasmus Hansen against Cl topher Mortensen and others. Judgment defendants, and plaintiff brings error. firmed.

Bell & Robinson, for plaintiff in e Henry Nunn and Paul, Haggart & Paul, defendants in error.

Digitized by Google

ALBERT, C. The plaintiff filed a petition against the defendants in the following words and figures: "The plaintiff complains of the defendants, and for cause of action alleges that on or about the 24th day of March, 1887, the above-named Rasmus Hansen, for and in consideration of the sum of $4,840.00 and other valuable considerations paid and given by Berte Marie Hansen, his then wife, made, executed, and delivered to the said Berte Marie Hansen, for the use and benefit of their children, Anna Oline Hansen, Marie Hansen, Petrine Jacobine Hansen and Hans Chr. Hansen, his certain mortgage deed in writing for the sum of $1,000.00, covenanting and agreeing therein to pay each of said children when they respectively become of the age of 21 years the sum of $250.00. That said total sum should bear interest at the rate of 7% per annum, payable annually, said interest to be paid to and collected by the person or persons on whom the support of said children devolves. Said mortgage conveyed, subject to the considerations and limitations therein written, the following described real estate then owned in fee by the said Rasmus Hansen, and situated in Howard county, Nebraska: Northwest quarter of section twenty-three (23), in township sixteen (16), range ten (10). Neither said mortgage, nor the debt evidenced thereby, nor the interest thereon due on the 24th day of March, 1897, has been paid, and there is due and unpaid as such interest the sum of $70.00. That subsequent to the 24th day of March, 1887, the said Rasmus Hansen conveyed said land by warranty deed to one F. O. Malmgren, by request of, and for the use and benefit of, one Andrew Brock, subject to the said mortgage of $1,000.00, the same being a part of the consideration for said land, which said mortgage the said Andrew Brock agreed to assume and pay as a part of the consideration for said land. That on or about the 15th day of February, 1888, said F. O. Malmgren conveyed said land, as by a prearranged agreement, to one Andrew Brock, one of the above-named defendants, subject to said mortgage, which said mortgage the said Andrew Brock assumed and agreed to pay as part of the consideration for the said land, together with the interest thereon until full payment should be made according to the conditions of said mortgage. That on or about the 14th day of March, 1889, the said Andrew Brock and Matilda Brock, his wife, sold and conveyed said land to Christopher Mortensen, one of the above-named defendants, by warranty deed, and the said Christopher Mortensen assumed and agreed to pay said mortgage, with all the interest thereon, as part of the consideration for said land. That said Christopher Mortensen is now the owner of said land in fee, and has failed to pay the interest on said mortgage debt for the year ending March 24, 1897, and said interest is past due and wholly unpaid. That the agreement of the said Andrew Brock and Christopher Mortensen, whereby they each respectively assumed and agreed to pay said mortgage debt and the interest thereon as above set forth, were each verbal, and made at the time the conveyances were made to them and each of them. A true copy of said mortgage is hereto attached, and made a part hereof, and marked 'Ex. A.' That by reason of said agreement and the failure of the said defendants to pay the interest on said debt as aforesaid the said defendants and each of them have become and are liable to and are indebted to this plaintiff in the sum of $70.00. That the said Rasmus Hansen, the above plaintiff, is the father of said above-named children, and the person on whom the care and support of said children devolves, and said children are now in the care of and under the control of said Rasmus Hansen. Wherefore plaintiff prays for judgment against the defendants for the sum of $70.00, with interest from March 24, 1897, and for costs."

The instrument referred to in the petition as "Exhibit A," so far as is material to this case, is as follows: "This indenture, made this 24th day of March, 1887, witnesseth: That I, Rasmus Hansen, of Howard County, Nebraska, for and in consideration of $4,840.00 in hand paid by my wife, Berte Marie Hansen, do by these presents bind myself, my heirs and assigns as follows to-wit, whereas Anna Oline Hansen, nine years old, and Petrine Jacobine Hansen, six years old, and Hans Christian Hansen, four weeks old, being the lawful issue of myself, Rasmus Hansen, and Berte Marie Hansen, and whereas it is desired by said Berte Marie Hansen that said Anna Oline Hansen, Petrine Jacobine Hansen, Marie Hansen and Hans Christian Hansen or their heirs shall have and receive a portion of the estate of said Berte Marie Hansen, it is hereby understood and agreed that in consideration of the sum above mentioned that I, Rasmus Hansen, am bound and firmly held unto Berte Marie Hansen and to Anna Oline Hansen, Petrine Jacobine Hansen, Marie Hansen and Christian Hansen to perform the following conditions, to-wit: That on the day each of the above mentioned children become of the age of 21 years I shall give to Anna Oline Hansen, Petrine Jacobine Hansen, Marie Hansen, and Hans Christian Hansen the sum of $250.00 each, and it is hereby understood and agreed by and between Rasmus Hansen and Berte Marie Hansen that this instrument shall be a legal and binding lien upon the northwest quarter of section twenty-three (23) in Township sixteen (16), Range ten (10), in Howard County, Nebraska. * * * And it is hereby understood and agreed * * * that said sum of $1,000.00 shall draw interest at the rate of 7 per cent. per annum from this date. And that said interest shall be paid to the person upon whom the support of the said Anna Oline Hansen, Petrine Jacobine Hansen, Marie Hansen and Hans Christian Hansen shall

Digitized by Google

fall. It is further agreed and understood that in default of the payment of the said sum of $1,000.00 when the same shall become due, as specified herein, or in default of the payment of the interest at the end of each year after the date of this instrument or any part of said interest, or in default of the payment of the taxes as herein specified then the said Anna Oline Hansen, Petrine Jacobine Hansen, Marie Hansen and Hans Christian Hansen or their legal representatives may foreclose this lien in the same manner and subject to the same conditions that mortgages in equity are foreclosed, and the $1,000.00 and the interest derived from said sale shall be converted into good security bearing not less than 7 per cent. interest payable annually. Provided, however, that before foreclosed of this lien said Anna Oline Hansen, Petrine Jacobine Hansen, Marie Hansen, and Hans Christian Hansen or their legal representatives shall enter into bonds in probate court for the faithful performance of the conditions mentioned in this instrument in the sum of $3,000.00 in the same manner as in the case of the original appointment of guardian of minor children."

The defendants each interposed a demurrer on the grounds that the plaintiff lacked legal capacity to sue, that there was defect of parties plaintiff, and that the facts stated in the petition were insufficient to constitute a cause of action. The demurrer was sustained, and the cause dismissed. The plaintiff brings the case here on error.

In our opinion, the demurrer was properly sustained. If the plaintiff is entitled to maintain this action, it is by virtue of that provision of the mortgage which makes the interest payable to the person upon whom the support of the beneficiaries devolves. We do not believe it was the intention of the parties to that instrument to confer upon some person, who, in the nature of things, must have been unknown to them at the time, the power to collect and handle this money at his own will and pleasure. On the contrary, we think it is clear from the entire instrument that the intention was to provide for the payment of a certain sum when the beneficiaries should have respectively attained the age of 21 years, and a certain income that might be applied to their support and maintenance during that period; in other words, the contract was for their exclusive benefit. All payments falling due are payable only to them or their legally appointed guardian, who, by the terms of the instrument, is charged with the duty of applying the interest on the $1,000, so far as needful, at least, to their support and maintenance during minority. If we are correct in this construction of the instrument, it follows that the plaintiff lacks legal capacity to maintain the action, that the facts stated in the petition are insufficient to constitute a cause of action, and that the court did not err in sustaining the demurrer.

We recommend that the judgment of t district court be affirmed.

AMES and DUFFIE, CC., concur.

Affirmed.

RELIANCE TRUST CO. v. ATHERTO

(Supreme Court of Nebraska. July 3, 190

Motion for rehearing. Denied.
For former opinion, see 93 N. W. 150.

ALBERT, C. An opinion was filed in t case at the present term, which is repor in 93 N. W. 150. A motion for rehear has been filed, in which a vigorous ass is made on a proposition contained in opinion to the effect that a return show service of a summons by leaving a copy the residence of the defendant does not isfy the statute requiring a copy to be at his usual place of residence. But the qu tion is not necessarily involved in this ca hence the opinion, to that extent, is dictu By the return in this case it is left unc tain to whom, and at whose residence, copy was delivered. The legality of the se ice was put in issue by the objections of defendant to the jurisdiction of the cou The court sustained those objections, and was thereby established as one of the fa in the case that there had been no le service of summons issued September 1, 19 Consequently it is true, as stated in the mer opinion, that the appearance of the fendant in the case after his objections w sustained was voluntary.

We do not overlook the fact that the cou in passing on the merits of the case, fou that "the summons served on the defenda herein was delivered to the sheriff for serv September 27, 1900." The phrase "served the defendant" is not to be taken as a find that there had been due and legal serv thereof, thereby vacating the order of justice sustaining the objections to his ju diction, but rather as a means of identify the summons to which he referred. No m tion was made to amend the return to the su mons. Timely objections were lodged agai the service, which were properly sustained the justice. There is no record of any ot service. We must, therefore, hold, as here fore, that the general appearance of the fendant was voluntary, and was the co mencement of the action within the meani of the statute of limitations. As such pearance was entered more than five ye after the cause of action had accrued, claim was barred when the action was co menced.

Complaint is made in the motion that it held in the opinion as a matter of law t the payment relied upon to interrupt running of the statute was not volunta

Digitized by Google

The question arose on a demurrer to the petition. The petition does not allege a payment, but merely that the note bears an indorsement of a credit of the proceeds of a foreclosure sale. Under such circumstances the question presented is one of law, namely, whether such a credit is a voluntary payment within the meaning of the statute of limitations. The court has held that it is not. Moffit v. Carr, 48 Neb. 403, 67 N. W. 150, 58 Am. St. Rep. 696.

It is recommended that the motion for rehearing be denied.

AMES and DUFFIE, CC., concur.

PER CURIAM. For the reasons stated in the foregoing opinion, the motion is denied.

STATE ex rel. PIERSON v. FAWCETT, Judge.

(Supreme Court of Nebraska. Dec. 18, 1901.)

BILL OF EXCEPTIONS—CONTENTS—AFFIDAVITS.

1. The function of a bill of exceptions is to bring into the record the facts on which the trial court decided the questions of law presented for review.

2. Affidavits not presented to and considered by the trial court will not be considered in this court in the event that the case is brought to this court for review, and therefore should not be included in the bill of exceptions.

Commissioners' Opinion. Department No. 2. "Not to be officially reported."

Application by the state, on the relation of Emil Pierson, for writ of mandamus to Jacob Fawcett, judge of the Fourth Judicial District. Writ denied.

V. O. Strickler and W. A. Corson, for relator. Silas Cobb, for respondent.

OLDHAM, C. This is an original action brought in this court for the purpose of procuring a writ of mandamus to compel Hon. Jacob Fawcett, one of the judges of the Fourth Judicial District of this state, to settle, sign, and allow what purports to be a bill of exceptions. An alternative writ was herein allowed by the Chief Justice, and this is a hearing had upon the rule to show cause, upon which we heard the evidence of the respective parties.

The testimony discloses that there was an action pending in the district court of Douglas county, entitled "The State of Nebraska v. The Nebraska Savings and Exchange Bank"; this action having been instituted by the Attorney General, by the direction of the State Banking Board, for the purpose of winding up the affairs of the defendant bank, which was insolvent. That one William K. Potter was the receiver thereof, and this case was on the docket that Judge Fawcett had in charge. That the relator and the other were creditors of this bank. That on June 24, 1901, the receiver procured an order in the district court of Douglas county, Neb., Judge Fawcett presiding, permitting him "to pay a dividend of 56 per cent. of the balance due on claims as originally allowed against said bank to the owners of the receiver's certificates." That afterwards a motion was filed in said case by "Michael Carmondy, John Mackin, and 53 other depositors." After lengthy recitations and allegations, the motion concludes as follows: "Wherefore we move that the court modify said order so signed June —, 1901, by directing said receiver to pay to said depositors the said sum of 56 per cent. upon their unpaid claims, and to then require said receiver to report to this court fully touching what moneys remain in his hands after paying said dividend, and that he then be directed to proceed to collect from said Thomas Wolfe and from other stockholders of said bank, who have not contributed to said fund in the amounts named in said order of April 25, 1901, the full amount of their stock liability, for the use and benefit of the depositors and creditors of said bank." This motion was not supported by affidavits or other proof. That on July 2d Judge Fawcett overruled this motion, and at that time refused to hear oral testimony in support thereof. On July 5th following the overruling of the motion, the purported bill of exceptions was presented to Judge Fawcett with the request that he settle, sign, and allow the same; but he refused to do so, and assigned as grounds for his refusal that it was not a bill of exceptions, and that the persons proposing the same were not entitled to a bill of exceptions. This proposed bill of exceptions contained nothing but three affidavits—the affidavit of V. O. Strickler, the joint affidavit of W. A. Corson and V. O. Strickler, and the separate affidavit of W. A. Corson. Neither of these affidavits bears any filing mark, but the jurat of each shows that they were sworn to on July 3, 1901. Now, then, the question is, should affidavits that were not used on the hearing, and not made until after the controversy was decided, be brought into and made a part of the record by incorporating them into a bill of exceptions? An affidavit is an ex parte statement in writing of facts, under oath, and may be used as evidence "to prove the service of summons, notice, or other process in an action to obtain a personal remedy, an examination of a witness, a stay of proceedings, or upon a motion, and in any other case permitted by law." Section 370, Code Civ. Proc. The function of a bill of exceptions is to bring into the record the facts on which the trial court decided the questions of law presented for review. It follows, then, that this will include only the facts that were presented to the trial court, and upon which it acted by either considering or rejecting them. Facts not presented to it cannot be the subject of review in this court, for the reason that they have never been the subject of judicial consideration in the court below. It is the province of this

Digitized by Google

court to review the acts which have been done by the trial court, but for reasons which are obvious we cannot review that which has not been done by it. For the reason that the affidavits contained in the proposed bill of exceptions were not presented to and considered by the court below on the hearing of the motion complained of, we conclude that they cannot be considered in the event that the case is brought to this court for review, and therefore should not be brought into the record by a bill of exceptions.

It is therefore recommended that the writ be denied.

POUND and SEDGWICK, CC., concur.

Writ denied.

CHADRON LOAN & BUILDING ASS'N v. SCOTT et al.*

(Supreme Court of Nebraska. July 3, 1903.)

NEW TRIAL—FILING MOTION—HEARING.

1. A motion for a new trial on the ground of newly discovered evidence must be filed at the term, but not necessarily within three days from the date of the rendition of the judgment complained of.

2. A motion for a new trial duly filed within the time prescribed by statute at one term of court may be heard and decided at a subsequent term, and, if affidavits are required for its support, they may be filed at any time before its final submission.

Commissioners' Opinion, Department No. 1. Appeal from District Court, Dawes County; Harrington, Judge.

"Not to be officially reported."

Action by the Chadron Loan & Building Association against Robert C. Scott and others. Judgment for defendants, and plaintiff appeals. Affirmed.

A. W. Crites, for appellant. Allen G. Fisher, F. M. O'Linn, and M. F. Harrington, for appellees.

AMES, C. At the March, 1901, term of the district court for Dawes county the plaintiff obtained a decree of foreclosure and sale upon a real estate mortgage. During the same term, but after the lapse of more than three days from the date of the rendition of the judgment, the defendant filed a motion for a new trial, containing, among other assignments of error, the following: "Newly discovered evidence, which the defendant was not, with a due exercise of diligence, able to discover and produce at the trial, as will appear from the affidavits to be hereafter filed herein." No affidavits in support of the motion were filed at that term, but at a subsequent term such affidavits were filed, and the court, in consideration of them, granted the motion, vacated the former judgment, and set the case down for a new trial. Later the parties appeared by their counsel, by whom it was stipulated in open court that the cause should be submitted upon substantially the same evidence taken at the former trial. A submission was made accordingly, and the court rendered a judgment thereon, from which the plaintiff appeals.

The principal contention of the appellant is that the court erred in entertaining and granting the motion after the expiration of the term at which the judgment was rendered, and because it was not filed within three days after such rendition. We do not think that the objection is well taken. Section 316 of the Code of Civil Procedure expressly excepts applications on the ground of newly discovered evidence from the requirement that such motions shall be filed within the said three days, and permits them to be filed at any time during the term of the rendition of the judgment; and since the decison of this court in Harris v. State, 24 Neb. 803, 40 N. W. 317, the practice of deciding such motions at a term subsequent to that at which they were filed has become general. In the same case it was held that affidavits in support of a motion for a new trial may be filed at any time before its submission. In the light of the foregoing authority there seems to be no room for doubt that the court had as ample jurisdiction to hear and decide the motion at the subsequent term as at that at which it was filed. In Weber v. Kirkendall, 44 Neb. 766, 63 N. W. 35, this court held, quoting from the syllabi: "(2) Primarily, the office of a motion for a new trial is to afford the court an opportunity to correct errors in its own proceedings without subjecting parties to the expense and inconvenience of appeal or petition in error. (3) The power to correct errors in their own proceedings is inherent in all courts of general jurisdiction, and in the exercise of that discretion they are governed not alone by this solicitude for the rights of the litigants, but also by consideration of justice to themselves as instruments provided for the impartial administration of the law. (4) A stronger case will be required for interference by this court on account of an order setting aside a verdict resulting in a second trial on the merits of a cause than where the motion therefor is denied. Bigler v. Baker, 40 Neb. 325 [58 N. W. 1026, 24 L. R. A. 255]." Within the rule thus announced, we are of opinion that the affidavits in support of the motion for a new trial are sufficient to justify the order granting it, although it is probable that they would not have upheld an assignment of error in denying it. The principal objection made to them is that the newly discovered evidence disclosed by them is largely cumulative. But it has been repeatedly held by this court that evidence of that character is sufficient if it is of such a nature as that it can be seen that it would probably have changed the result of the trial. That, in the opinion of the trial judge, it would have

¶ 1. See New Trial, vol. 37, Cent. Dig. § 241.

*Rehearing denied October 7, 1903.

Digitized by Google

done so in this case, is demonstrated by the fact that both trials were before him without a jury, that he granted the motion, and that his latter judgment was the direct reverse of his former.

We therefore recommend that the judgment of the district court be affirmed.

HASTINGS and OLDHAM, CC., concur.

PER CURIAM. The conclusions reached by the Commissioners are approved, and, it appearing that the adoption of the recommendations made will result in a right decision of the cause, it is ordered that the judgment of the district court be affirmed.

CONNOR v. SCHREINER-FLACK GRAIN CO.

(Supreme Court of Nebraska. Dec. 18, 1901.)

ERROR—BILL OF EXCEPTIONS—REVIEW OF INSTRUCTIONS.

1. When a case is brought to this court by petition in error, and there is no bill of exceptions in the record, instructions given by the trial court that might have been proper under any possible condition of the evidence under the pleadings will not be held erroneous and prejudicial.

Commissioners' Opinion. Department No. 2. Error to District Court, Douglas County; Baker, Judge.

"Not to be officially reported."

Action by the Schreiner-Flack Grain Company against Joseph A. Connor. Judgment for plaintiff. Defendant brings error. Affirmed.

Duffie & Van Dresen, for plaintiff in error. W. D. McHugh, for defendant in error.

SEDGWICK, C. In this action the plaintiff alleged in its petition in the district court that it made with the defendant a contract for the purchase of the defendant of a quantity of corn, which contract was afterwards extended and modified, and finally, in consideration of the cancellation of the contract, the defendant agreed to pay the plaintiff the sum of $625. The answer of the defendant is, in substance, that the contract for the sale and purchase of the corn was a gambling contract, as it was not intended that any corn should be delivered under it, but merely that margins should be paid; and also set up a counterclaim for sums already paid thereon. It was tried with a jury, and verdict for plaintiff, and brought here by defendant upon petition in error.

There is no bill of exceptions in the record. The plaintiff in error admits that there was sufficient evidence to warrant the jury in finding the verdict they did, and says in his brief that it does not complain "that any one particular instruction" is not warranted by the evidence. The complaint is that the instructions gave "undue prominence to one feature of the case, and that this unduly influenced the jury," and this is the sole question raised. There were 16 several instructions given by the court to the jury. Five of these are complained of as giving undue prominence to one feature of the case. They are too lengthy to quote here, but they manifestly come within the well-established rule of this court that all presumptions are in favor of the regularity of the proceedings of the district court. And when a case is presented in this court upon the transcript alone, without a bill of exceptions, instructions given to the trial jury by the district court will be presumed to be correct, unless they misstate the law, and contain propositions which could not be held correct in any possible case made by the proof under the pleadings. Willis v. State, 27 Neb. 98, 42 N. W. 920; Oltmanns v. Findlay, 47 Neb. 289, 66 N. W. 425. And we cannot say from this record that there was any error in these instructions which was prejudicial to the rights of the plaintiff in error. It might be added that each of these instructions appears to present some particular phase of the case which may or may not have been covered by the evidence.

It is recommended that the judgment of the district court be affirmed.

OLDHAM and POUND, CC., concur.

Affirmed.

WITHNELL et al. v. WITHNELL et al.*

(Supreme Court of Nebraska. July 3, 1903.)

TENANT BY CURTESY—SALE OF PROPERTY—RIGHTS IN PROCEEDS.

1. Plaintiffs' mother died in 1883, seised in fee of real property in this state, leaving their father as surviving spouse. *Held*, that the father took a life estate in the property as tenant by curtesy.

2. Plaintiffs and their father sold for $40,000 real property in which he held a life estate and they the remainder. Plaintiffs received $24,000 and the father retained $16,000 and mingled it with his own property. The father lived nine years after the sale, his age not being shown in the record. *Held*, that these facts do not show plaintiffs' ownership of the $16,000 retained and used by the father. *Held*, further, that the father's declarations of an intention to invest the same for the plaintiffs did not create a title thereto in them.

3. Record and evidence examined, and *held* not to show error. *Held*, further, that the trial court was justified in rejecting plaintiffs' claim of equitable title to the property involved in the action.

(Syllabus by the Court.)

Commissioners' Opinion. Department No. 2. Error to District Court, Douglas County; Read, Judge.

Action by Charles H. Withnell and others against Martha A. Withnell and others. Judgment for defendants, and plaintiffs bring error. Affirmed.

A. L. Knabe and Martin Langdon, for plaintiffs in error. A. S. Ritchie and C. E. Herring, for defendants in error.

*Rehearing denied October 21, 1903.

Digitized by Google

GLANVILLE, C. This action is brought for the purpose of establishing title to certain property in the city of Omaha in the plaintiffs on the ground that the same was held in trust for them. The plaintiffs are all of the children of Mary Withnell and John Withnell, deceased. The defendants are Martha A. Withnell, stepmother of the plaintiffs, and widow of the deceased, John Withnell, and the administrator of the estate of John Withnell. There is no allegation or proof of any facts to indicate that the administrator has any interest in the contest, and his connection therewith will be ignored in this opinion. After the introduction of plaintiffs' evidence, the trial court, upon motion of the defendants, found "that no resulting trust had been shown by the said plaintiffs by clear and satisfactory evidence," and rendered judgment in favor of the defendants. A motion for new trial was made and overruled, and the case is before us upon petition in error.

The facts clearly established by the pleadings and proofs are as follows: Mary Withnell and John Withnell were living with their family upon certain property in the city of Omaha, which we will designate herein as the "Fifteenth Street Property," prior to and at the time of the death of Mary Withnell; and at the time of her death in January, 1883, she was seised in fee of that property. John Withnell and his family continued to reside thereon until January, 1892. In the meantime the defendant Martha A. Withnell was married to John Withnell in 1887, and resided with him from that time until his death, January 29, 1901. On the 28th day of January, 1892, this Fifteenth street property was sold for $40,000, and the plaintiffs and John Withnell made the deed therefor, but John Withnell made the deal, and the money was paid to him. Of this sum of $40,000, $24,000 was by some understanding among the parties paid to the plaintiffs, $3,000 to each of them, unless possibly one of them may not have received her portion; and $16,000 was retained by the father. Previous to that time those lots in the city of Omaha which we will hereafter call the "Farnam Street Property" were deeded to John Withnell, the consideration, as shown by the deeds, being $14,700, the deeds being dated August 4, 1887, and July 25, 1888. Almost simultaneously with the receipt of the last half of the purchase money for the Fifteenth street property, John Withnell commenced the erection of a home on the Farnam street property, into which he afterwards moved with his family. April 4, 1894, this Farnam street property was sold, the consideration named in the deed being $40,000. It was at the time incumbered by mortgages to the extent of $9,000, and in exchange or part payment therefor the property involved in this action, known as the "St. Mary's Avenue Property," was taken for the consideration of $15,000. There is no pleading or proof as to how or in what form the other portion of the consideration was received. It is unequivocally alleged in the petition and admitted in the answer that John Withnel died seised in fee of the St. Mary's avenue property. It is, however, in another part of the petition, alleged "that John Withnell, deceased, did take the title to said property last aforementioned [being the St. Mary's avenue property] in the name of himself and Martha A. Withnell, his second wife, and that the title to said property so remained and was of record at the time of the death of the said John Withnell," and the allegations of that paragraph of the petition in which the foregoing is contained are admitted generally by the defendants. The proof shows that the deed was taken to the husband and wife, and there is no allegation or proof of any change of title thereafter. This St. Mary's avenue property is incumbered by a mortgage made by John and Martha A. Withnell to the extent of $2,000.

Aside from what appears as above stated, there are matters in dispute. The plaintiffs, in their petition, allege as follows: "That on the 28th day of January, A. D. 1892, these plaintiffs sold said property aforementioned [being the Farnam street property] to one Bartholomew Scannel in consideration of the sum of forty thousand ($40,000) dollars; that immediately thereafter these plaintiffs handed to said John Withnell the sum of sixteen ($16,000) thousand dollars, without relinquishing their rights thereto, and upon the express understanding and verbal agreement with the said John Withnell that he, the said John Withnell, now deceased, should take said money aforesaid, and invest it for the benefit of these plaintiffs. Plaintiffs further allege that the said John Withnell, deceased, thereupon afterwards did invest said money on or about the 2d day of July, A. D. 1892, in a residence building upon" (here is described the Fifteenth street property) "and in improvements upon said property." The proof does not correspond with the first allegations, and in fact clearly establishes that the $16,000 was never paid to the plaintiffs, nor in any manner ever placed in their possession, nor came under their control. Neither does it establish the fact that they alone sold the property, for John Withnell necessarily joined in the deed for the purpose of conveying his interest therein, which was a life estate, as hereafter shown; and it was his life estate, together with their remainder, that was sold by them and their father. As to the use of the $16,000 in the erection of the improvements upon the Farnam street property, we are of the opinion that the proof sufficiently sustains this allegation, if the title of the plaintiffs to the $16,000 is sufficiently established by the proof. Again, it is alleged by the plaintiffs that the St. Mary's avenue property is of the value of $8,000. This is denied by the answer, which alleges that its value does not exceed $4,000. No evidence as to its value appears in the bill of excep-

Digitized by Google

tions. There is also an allegation in the petition that during her lifetime Mary Withnell sold certain real estate, "and realized therefrom the sum of $5,500, which said sum of money, without relinquishing her right thereto, she handed to the said John Withnell, deceased, to be invested for her, and that the said John Whitnell did invest said sum of money in the following described property" (then follows the description of the Farnam street property). As to this allegation it appears by the evidence that the property mentioned was sold in 1882, that Mary Withnell died in 1883, and that the Farnam street property was purchased in 1887 and 1888. It further appears that the consideration for the property sold in 1882 was but $4,050 above the incumbrance. There is absolutely no evidence to trace any of this money into Mr. Withnell's hands, or into the Farnam street property, unless it be that one witness testified to being present a few days before the death of Mary Withnell, when she stated to her husband, "You have $8,000 of mine in your possession, and that belongs to the children," and that he said, "Yes, Mary, that is right," and the testimony of the son-in-law, E. D. Bellis, wherein he stated that John Withnell had on one occasion told him that he had some money that Mrs. Mary Withnell had left in his hands, a portion of which he had invested with the firm of Withnell Bros., and had drawn out from Withnell Bros. this amount (witness did not remember what amount), together with what the profits had been on it, and he had bought two lots on Farnam street. This conversation is alleged to have taken place in 1892. This evidence is insufficient to establish any trust in the unimproved lots on Farnam street in favor of the children because of ownership of the money paid therefor, and, if any trust in either the Farnam street property or the St. Mary's avenue property resulted in their favor, it must be because of their ownership of the $16,000 retained by their father. It is contended by plaintiffs that this money belonged to them, not that their title thereto resulted from any contract with their father, or gift thereof by him; but that, as a matter of law, their mother having died seised of the property for which this money was received, the money became their property, and that their father received and held the same in trust for them. If they cannot prevail in this contention there is no hope of their establishing a trust in the property in dispute. If the money belonged to the father, his promise to invest it for them would not pass the title to them. It would not be good as a gift inter vivos, because it was never delivered to the plaintiffs nor invested in their name. If he had joined in the deed, and permitted the children to collect and retain the entire consideration, that might have been good as an advancement; but that was not done. As a matter of law, when Mrs. Mary Withnell died seised in fee of the Fifteenth street property, the title vested eo instante in John Withnell for life, as tenant by curtesy, with remainder to the plaintiffs. Section 29 of the chapter on Descendants in our statutes (Comp. St. 1885, c. 23) as it stood prior to the amendment of 1887, provided that: "When any man and his wife shall be seized in her right of any estate or inheritance in lands, the husband shall, on the death of his wife, hold the lands for his life, as tenant thereof by curtesy." Nothing in the bill of exceptions or the pleadings shows the age of John Withnell at any time. It is, therefore, impossible to determine his expectancy under the Carlisle Tables. He died January 29, 1901—nine years and a day after the date of the deed to the Fifteenth street property. He was in fact then the owner of a life estate in the property, which would have lasted for nine years. Had the parties recognized his right to the use for life of the entire $40,000 in lieu of his life estate in the property sold, and the whole sum had been left with him in recognition of this right, we are of the opinion that he would have been trustee for the remaindermen. In Cheshire v. Cheshire, 37 N. C. 561, it is said: "A court of equity has invariably entertained a bill by one entitled to a personal chattel in remainder after a life estate to have the property secured when it is alleged in the bill that it is likely to be lost by any means whatever; and when the property has been converted into another species of property by the tenant for life, or those who claim in privity with him, the remaindermen may elect to follow and take the fund in its changed form." The same rule is announced in Hunter v. Yarborough, 92 N. C. 68. But the $40,000 was not so left with the father, but was separated into two funds—$24,000 and $16,000. The present worth of $40,000 due in nine years, computed on the basis of 7 per cent. simple interest, is in the neighborhood of $24,500, while, compounding the interest with annual rests, it is something less than $22,000; making the value of the father's life estate from $15,500 to $18,000.

It cannot be supposed under the evidence that John Withnell would be willing to forego his legal interest in this property. It is shown by the plaintiffs' witnesses that at that time he was not making money in his business, and it is not shown that he had any other tangible property, except the unimproved lots on Farnam street. The fact that the $24,000 was paid to the children and recognized as theirs, and that $16,000 was retained by the father, leads us to the belief that this $16,000 was so retained by him as the agreed value of his interest in the property, computed upon some basis agreed upon between him and the children; and that the money in fact and in law was the property of the father. If this is correct, then no promise on his part to do anything with the property for the benefit of the children would have the effect of placing the title the

Digitized by Google

in them, until their title was made good by some delivery or investment in their name; neither of which ever took place. A resulting trust can no more be created by an oral contract or oral declarations of holding the property in trust than can an express trust be so created. A resulting trust in land is created by operation of law, and only because of being created by operation of law does it constitute an exception to the rule that a trust in land cannot be created or declared except in writing. Only the facts upon which the law will raise the trust may be proved by parol. Unless the money itself belonged to the children, its investment in real property by their father did not create a trust by operation of law. While oral declarations of one in posession of a fund are admissible for the purpose of helping to trace the fund when its trust character is established, and also as evidence tending to establish such character by way of admission, yet they cannot alone create ownership in the supposed cestui que trust, or deprive the real owner of his right thereto, unless, because of the circumstances, they create an estoppel.

Defendant has contended that, under the pleadings and evidence, if any trust is claimed and shown, it is an express trust, and void under the statute of frauds, because by parol; and that, there being an express trust, no resulting trust can be raised. These results do not necessarily follow. An express trust in the $16,000 fund could be created by parol contract if the plaintiffs owned the fund; and then, the fund being held under express trust, if it was converted by the trustee into other property, and the title thereto taken in his own name, a resulting trust would attach to the property in which the fund was invested.

A very common case of resulting trust is where one holding a fund under an express trust, either with the duty of holding the fund intact or with power of discretionary investment, invests the trust fund in his own name, and the law raises a resulting trust in the acquired property because of the ownership of the fund, notwithstanding it was originally held under an express trust. All that we can say for the most favorable evidence introduced by the plaintiffs is that it tended to establish a promise of their father to invest the $16,000 for them, without any indication or specification as to what investments would be made, and some conversations thereafter indicating that he considered the Farnam street property, which was eventually sold for $40,000, as their property, or rather, perhaps, that their money was invested therein, together with some rather loose and illy proved conversations in which the St. Mary's avenue property was spoken of as theirs. The difference between the selling price of the Farnam street property and the incumbrance thereon added to the price of the St. Mary's avenue property is $16,000. If, by any construction of the evidence, it will be sufficiently established that the original $16,000 fur was the property of the children, and th their father had promised to invest the su for them without specifying the investmen he could undoubtedly dedicate to the tru fund any of the proceeds of the sale of t Farnam street property he saw fit—eith the St. Mary's avenue property, or oth portion of the consideration. That he did n dedicate the St. Mary's avenue property such trust fund is evidenced by the fact th he took the title thereto jointly with h wife, the defendant, and then, with her, i cumbered it by mortgage. The lots on Fa nam street for which he had paid the co sideration of $14,700, appear to have be clear in his name after his marriage wi the defendant, and she had an interest the in, her signature to the deed was needed bar her dower, and was indispensable to co vey the homestead interest. Moreover, the is no evidence or pleading to show that might not at that time make a valid a vancement to her, and we think that, aft causing an interest in this property to conveyed to her, when it was taken in e change for their prior home and property, could not then dedicate it to the trust fur so as to destroy her interest therein.

It is urged by defendant that the $1 000 fund must be directly and specifica traced into the property sought to be i pressed with the trust. While, under certa conditions, this is the rule, yet when t trust is clear, and the trustee has dissipat the trust fund, an instant and continuing du rests upon him to restore the fund, and may do so by an appropriation of any of h own property to the trust estate. In Houg ton v. Davenport, 74 Me. 590, it is said: "trustee need not purchase property with t very dollars received from the trust fur nor give any notice to the cestui que trust the purchase, nor make any delivery to hi in order to create a trust estate. If he us or loses the trust fund, he may afterwar by some proceeding or act of his own, su stitute his own money therefor, and the su stituted money will be subject to the sa trust that was impressed upon the mon by the trustee used and lost. If a trust commingles trust money with money of h own, and afterwards separates from the co mon fund a proper portion of it as t property of the cestui que trust, and wi such portion of the fund purchase real e tate in his own name, the trust becomes i pressed upon and attached to the money th set aside and the real estate purchased wi such money." But we think no separati and dedication is proved in this case. It worthy of note that the deed to the St. Mar avenue property, carrying the title to pla tiffs' father and stepmother was at on recorded, yet, though his health was know to be failing, there does not appear to ha been any attempt made to secure a conve ance in recognition of the alleged tru

Digitized by Google

Upon the whole case we think the trial court was right in holding the evidence insufficient to establish a resulting trust in favor of the plaintiffs in the property in question.

Complaint is made, and error assigned, because the court ruled out certain evidence offered by the testimony of William Withnell. If the ruling of the court thereon was error, it is without prejudice, for the matter offered to be proved by this witness was well established by the evidence of another.

Complaint is also made that the court erred in admitting a certain chattel mortgage in evidence as an exhibit during the cross-examination of a witness. The matter was within the discretion of the court, and, moreover, the contents of the chattel mortgage had already been read into the record upon the cross-examination, and its admission as an exhibit could not change its force.

We recommend that the judgment of the district court be affirmed.

ALBERT and BARNES, CC., concur.

PER CURIAM. For the reasons given in the foregoing opinion, the judgment of the district court is affirmed.

MOORES et al. v. STATE ex rel. MacRAE.

(Supreme Court of Nebraska. July 3, 1903.)

SALOON LICENSE—FILING PROCESS—MANDAMUS.

1. A protest addressed to a board empowered to grant saloon licenses was sent by mail, and received prior to any action granting the license protested against. The board took cognizance of the same, and ordered it preserved in the files of its office. *Held*, that the protest was "filed" in the proper office within the meaning of the law, and that it became the duty of the board to "appoint a day for hearing the case," under the requirements of section 3, c. 50, of the Compiled Statutes.

2. Record examined, and *held* to show no error, and that the writ of mandamus was rightly granted by the district court.

Commissioners' Opinion. Department No. 2. Error to District Court, Douglas County; Estelle, Judge.

"Not to be officially reported."

Application by the state, on the relation of John D. MacRae, against Frank E. Moores and others, members of the board of fire and police commissioners of the city of Omaha. Judgment for relator, and defendants bring error. Affirmed.

Charles Ogden, Wright & Stout, and W. J. Connell, for plaintiffs in error. George C. Martin, for defendant in error.

GLANVILLE, C. This is a proceeding in error from the district court of Douglas county, seeking to reverse the judgment of that court granting a peremptory writ of mandamus against the members of the board of fire and police commissioners of the city of Omaha, requiring said board to convene and appoint a day for hearing the protests, remonstrances, and objections of the relator, John D. MacRae against the issuance of a saloon license to Charles Metz, also respondent in the action, and requiring said board to revoke the license which had already been granted until such hearing. There is practically only one contention on the part of the plaintiffs in error relied upon to secure a reversal, and that is that the protest, remonstrances, and objections to the granting of such license made by the relator and brought to the attention of the defendant board were not filed with the board. The answer filed by the members of the board contains the following: "Further, the said respondents deny that any protest or remonstrance has ever been filed with this board as by law required." The answer of Charles Metz contains the following: "And denies that the said relator at any time filed, or asked to be filed, any remonstrance or protest against the granting of said license." The license in question was granted on the 18th day of December, 1902, and the relator, who is a person entitled to be heard in opposition to the granting of such license, wrote and sent by mail in such manner that the same was received by the clerk of the defendant board on the 17th day of November, the following communication:

"Omaha, Nebr., Nov. 15/02.

"To the Honorable Board of Fire and Police Com's of City of Omaha, Nebraska—Dear Sirs: As owner and resident of 810 So. 27th Street, I protest against a license being granted to Mr. Chas. Metz to do business at 2705 Leavenworth St.

"Ever since he has had a saloon there, he has been a violator of the law; curtains are never removed at any time of day from the windows, and it is kept open for business every Sunday. I hope you will give me a hearing and an opportunity to prove my charges. I think you will acknowledge that I am interested more than those who live ½ to 1½ miles from 2705 Leavenworth Street. Furthermore, building is within limits of Catholic School Grounds.

"Thanking you in advance that I may be favored with my request, I remain yours,

"J. D. MacRae."

It was indorsed by the clerk of said board, at the direction of the secretary thereof, as follows: "Received by mail Nov. 17 at 11:30 a. m. Wm. I. Kierstead, Clerk." Thereafter, on the 15th day of December, the relator sent another communication by mail to said board in such a manner that it reached the hands of the clerk on the same day, and before the license in question was granted. These communications were placed in the envelope containing the other papers in relation to the application for such license. The record of the proceedings of the board upon the granting of the license in question, as originally made, is as follows: "Thursday, December 18th, 1902. 7:30 p. m. R

Digitized by Google

met pursuant to adjournment. William J. Broatch presiding. Members present: Thomas, Wright and Spratlen. Minutes of the last meeting were read and approved. The clerk then presented the application, bond, treasurer's receipt, and legal notice of publication of Charles Metz for license to sell liquor at No. 2705 Leavenworth street. The board finding no protest filed except the letters of J. D. MacRae, thereupon ordered the same placed on file, approved the bond, granted the license, and ordered the same issued." This record was afterwards corrected by proceedings of the board as shown by the following entry under date of January 9, 1903: "The following motion by Mr. Spratlen was unanimously adopted: 'Moved that the record in the matter of the application of Charles Metz for a license at 2705 Leavenworth street be, and the same is hereby, amended so as to conform with the state of facts as follows: The board finding no protest filed, and the clerk stating to the board that there was a letter of J. D. MacRae's dated November the 15th, 1902, but the board finding that the same was not filed or any request made to file the same, thereupon approved the bond, granted the license, and ordered the same issued. And the said board ordered the clerk to preserve in the files of this office said letter.' Thereupon the board adjourned."

Some errors of law occurring at the trial are alleged in the petition in error, but in the condition of the record only one of the assignments is entitled to be considered. The respondents offered to prove to the trial court "that the plaintiff in this case for several years last past prior to the year 1902 has been in the habit and custom of sending written communications to said board protesting against the granting of a license at No. 2705 Leavenworth street, and that the said plaintiff in each of said cases never appeared before said board, never asked for a time to be fixed for a hearing, and never followed the matter up in any manner whatsoever, except by sending said written communications." This offer was rejected, and, we think, properly so. The evidence has no bearing upon the issues of this case. The good faith of the board in the matter complained of is not in issue.

No contention is made by plaintiffs in error that the letter copies above are not sufficient in form and substance to have required the board to appoint a day for hearing thereon, under the requirements of section 3 of chapter 50 of the Compiled Statutes, relating to the granting of such licenses; and the only question to be determined is as to whether the papers should be considered as "filed" within the meaning of the law. That they were received in due time, and called to the attention of the board, and that the board recognized their presence, and noted the same upon its records, is undisputed. It seems that the relator called at the office of the clerk of the board on the 20th day of November, and was told that his first letter had been received, and that he saw it there marked or indorsed as above shown. It is further shown that the relator did not again call at the office of the board until December 20th, two days after the issuing of the license. This action was commenced on the 5th day of January, 1903. We find no provision of law fixing the duties of the clerk of the board in question; neither is there anything in the bill of exceptions which shows that the board had adopted any rule requiring the filing marks on papers presented to the board; and the record of its proceedings at the time of granting the license in question would indicate a custom of making papers a part of its record by ordering them filed. As corrected, it shows that the application, bond, treasurer's receipt, and notice of publication connected with the license in question were presented by the clerk, and that the board "ordered the same placed on file," and that the board also "ordered the clerk to preserve in the files of this office said letter"—referring to the letter of the relator. We think these communications should be treated as proper protests and remonstrances, and that to all intents and purposes they were "filed in the office where the application is made," as provided by the section of the statute above referred to; that under the law as repeatedly construed by this court it became the duty of the defendant board to appoint a day for the hearing of the relator's protest, and that he must be given "a hearing and an opportunity to prove his charges," as requested. It is too thoroughly settled by this court that the provisions of the statute requiring such action on the part of the license boards is mandatory to require discussion. See State v. Reynolds, 18 Neb. 431, 25 N. W. 610; Vanderlip v. Derby, 19 Neb. 165, 26 N. W. 707, and cases cited.

The judgment of the district court is right, and we recommend that it be in all things affirmed.

ALBERT and BARNES, CC., concur.

PER CURIAM. The conclusions reached by the Commissioners are approved, and, it appearing that the adoption of the recommendations made will result in a right decision of the cause, it is ordered that the judgment of the district court be affirmed; and it is further ordered that a mandate be issued instanter.

PORTER v. TROMPEN et al.

(Supreme Court of Nebraska. Nov. 20, 1901.)

EXECUTION—REFUSAL TO SELL LAND—COMPLICATED TITLE—COSTS.

1. No damage appearing to have been sustained, and the trial court finding that the complicated condition of the title justified the sheriff in refusing to sell real estate levied upon by execution, decree directing sale, but exonerating sheriff, upheld.

Digitized by Google

2. In other actions than those in which costs follow of course, the discretion of the trial court in awarding costs will not be interfered with, except where facts regularly brought before this court show abuse of such discretion.

Commissioners' Opinion. Department No. 1. Appeal from District Court, Lancaster County; Cornish, Judge.

"Not to be officially reported."

Action by Alexander S. Porter against John J. Trompen and others. Judgment for plaintiff, and defendants appeal. Affirmed.

Billingsley & Greene, E. F. Pettis, Burr & Burr, S. L. Geisthardt, and Chas. O. Whedon, for appellants. Walter J. Lamb, for appellee.

HASTINGS, C. This is an appeal originally taken by a number of defendants from a decree rendered in favor of plaintiff, directing the sale, in a certain order, of real estate which had been previously levied upon by the defendant sheriff. May 29, 1896, the plaintiff procured an execution from the district court of Lancaster county against Jonathan Chase, Joseph M. Beardsley, and Benjamin A. Gibson for the sum of $1,190.30 and costs—an unpaid remainder on a judgment of $15,100 recovered July 18, 1890, by the consideration of the district court of Douglas county. This execution the sheriff proceeded to levy upon a long list of lands as the property of Benjamin A. Gibson, and then returned the execution for lack of time to sell. Plaintiff then procured a vendi, on which the lands were advertised for sale, and subsequently the vendi was returned for the following reason given: "Having been notified by the clerk of the district court of a mandate issued by the Supreme Court restraining the sale under the judgment on which this writ issued of the property of Benj. A. Gibson, I herewith return this writ without offering said land for sale." The mandate is found to have contained the following: "That the judgment rendered by you in said cause be modified so that the appellants shall be restrained from further enforcing the execution of levy thereof against the property of Benjamin A. Gibson for the purpose of applying the proceeds thereof in satisfaction of the balance due on the judgment in favor of Alexander S. Porter and against Benjamin A. Gibson, Jonathan Chase, and Joseph M. Beardsley, and, as thus modified, the said decree be affirmed, at the costs of the appellee." The court finds that the plaintiff was entitled to have the amount due on the vendi made out of the property levied upon, and that the sheriff should proceed to sell the same in accordance with the statute, and provides the order in which the premises should be sold. The court also made the following finding: "And the court further finds that by reason of the premises and the foregoing facts, as found, and the involved condition of the title to the said several tracts of land, and the claims of the defendants and cross-petitioners, respectively, made against said sale, that the plaintiff is not entitled to a personal judgment against the defendant John J. Trompen for his refusal to sell the said property under the said vendi in his hands, which he was requested by the plaintiff to do." Plaintiff now claims the court should have given him judgment against the sheriff for the amount of the execution and the costs of this action.

A bill of exceptions was settled by the appealing defendants and the plaintiff, but the sheriff does not appear to have been made a party to the bill of exceptions, and, as against him, it cannot be considered. Indeed, it is difficult to find upon what basis it can be held that there is any appeal here on the part of the plaintiff. A careful examination of the record fails to reveal any sign of any cross-appeal on plaintiff's part, except his brief. He seems, however, to have taken exception to the finding in favor of defendant sheriff, and, as the transcript is here, perhaps plaintiff is entitled to have the case considered as appealed on his behalf and against the sheriff. He is not, however, entitled to have the bill of exceptions considered, and the only matter that need be examined is whether the findings of fact made by the court, when applied to the pleadings, disclose any relief to which the plaintiff is entitled, and show a right of recovery on his part. The findings, so far as they relate to the dispute between the plaintiff and the sheriff, are as above stated. They establish a lien and a right to sell property on the part of plaintiff. It is manifestly impossible that there can have been any disappearance or loss of property. There is nothing in the findings anywhere to indicate any loss of value, or that the property had not enhanced in value during the time that the plaintiff was required to wait. Neither is there anything to indicate that the property is not ample to discharge the execution and interest. Plaintiff's own petition is in the alternative, for either a judgment or a decree such as was rendered. Probably the fact that the prayer for relief is in the alternative, and one has been granted, would not warrant the refusal at this time to grant the other, also, if the facts set out in the pleadings and found by the court would warrant it. Bliss, Code Pleading, § 161. But they certainly do not. The facts found by the court do not disclose, as above suggested, any actual loss or damage sustained by the plaintiff because of his delay in procuring the sale of the property.

Plaintiff strenuously insists that he is entitled to costs, at all events, as against the sheriff. Costs in an action of this kind seem to be placed by the statute in the discretionary control of the court. This does not seem to have been one of the actions mentioned in section 620 of the Code of Procedure, in

¶ 2. See Appeal and Error, vol. 3, Cent. Dig. § 3881.

Digitized by Google

which costs are allowed of course upon a recovery by plaintiff. It is, rather, one of those "other actions" mentioned in section 623 of the Code, in which the court may award and tax costs as "in its discretion it may think right and equitable." The facts in this case, and upon which the trial court acted, are not before us, and we are without any means of determining that the action of the trial court was not just and equitable; and, of course, in the absence of any contrary showing, its correctness must be presumed.

It is therefore recommended that the judgment of the district court be affirmed.

DAY and KIRKPATRICK, CC., concur.

Affirmed.

ADKINS et al. v. ANDREWS.

(Supreme Court of Nebraska. Nov. 7, 1901.)

FORCIBLE ENTRY AND DETAINER—APPEAL.

1. Proceedings in forcible entry and detainer are not "civil cases," within the purview of section 17, art. 6, of the Constitution.

2. No appeal lay to the district court from the judgment of the county court in proceedings in forcible entry and detainer prior to the enactment of chapter 85, p. 484, Laws 1901.

Commissioners' Opinion. Department No. 2. Error to District Court, Custer County; Sullivan, Judge.

"Not to be officially reported."

Action by H. B. Andrews against Morris Adkins and others. Judgment for plaintiff, and defendants bring error. Reversed.

U. S. Gadd and Wolfenbarger & Williams, for plaintiffs in error. C. L. Gutterson and Kirkpatrick & Hager, for defendant in error.

POUND, C. This case presents the same questions as Armstrong v. Mayer, 60 Neb. 423, 83 N. W. 401, except that the proceedings in forcible entry and detainer here in question were begun before the county judge instead of before a justice of the peace. It is argued that Armstrong v. Mayer is for this reason inapplicable in view of section 17, art. 6, of the Constitution, which provides as follows: "Appeals to the district courts from the judgments of county courts shall be allowed in all criminal cases, on application of the defendant; and in all civil cases, on application of either party, and in such other cases as may be provided by law." But we think the statutory summary proceeding in forcible entry and detainer comes rather under the "other cases" referred to in the section quoted than under the head of "civil cases," as the latter phrase is used therein. In section 18 it is provided that no justice of the peace shall have jurisdiction "of any civil case where the amount in controversy shall exceed two hundred dollars," nor in any "matter wherein the title or boundaries of land may be in dispute." This would indicate that "civil cases," as used in this article of the Constitution, refers to the ordinary actions upon obligations and for injuries to person or property, and that special proceedings are not included, but are left to be governed by the provisions as to "other cases" not criminal. It is true the proceeding is a civil one, in the sense that it is not criminal, "although to some extent criminal in form." Galligher v. Connell, 23 Neb. 391, 403, 36 N. W. 566, 571. But the question is, not as to the meaning of "civil cases" in general, but as to the sense in which those words are used in the constitutional provision quoted. The special character of proceedings in forcible entry and detainer is generally recognized. They are intended to provide a speedy and more or less summary remedy, and belong in a class apart with other special and summary proceedings. In Armstrong v. Mayer, supra, it was held that the constitutional provision giving the district courts general common-law jurisdiction did not confer original jurisdiction in forcible entry, and we think the reasoning there employed makes also for the construction we have given to the section as to appeals from the county court. All the proceedings in the record were had prior to the enactment of chapter 85, p. 484, Laws 1901, at which time there were no valid statutory provisions for appeal of such cases. Armstrong v. Mayer, supra. It follows that the district court got no jurisdiction by reason of the attempted appeal, and that all proceedings disclosed by the record subsequent to the judgment in the county court were of no effect. The judgment must therefore be reversed, but, as the attempted appeal was taken and the consequent proceedings in the district court were had at the instance of the plaintiffs in error, we think, following the precedent in Armstrong v. Mayer, supra, that the costs should be taxed to them.

We recommend accordingly that the judgment be reversed, and the district court directed to dismiss the pretended appeal, and that the costs be taxed to plaintiffs in error.

OLDHAM and SEDGWICK, CC., concur.

Reversed with directions.

HOY v. STATE.

(Supreme Court of Nebraska. July 8, 1903.)

CRIMINAL LAW—APPEAL—REVIEW—RECORD—ASSAULT—EVIDENCE.

1. When the evidence upon which the trial court decided an issue of fact is not preserved in the record, it will be presumed that the decision is right.

2. Affidavits used on the trial of an issue of fact do not become part of the record by being certified to this court by the clerk of the district court. The law, and not the clerk, determines what shall constitute the record.

3. A person attacked or formidably threatened by three persons acting in concert may avail himself of the right of self-defense by using commensurate force against the nearest assail-

ant, although it is not from him, but from the others, that great bodily harm is apprehended.

4. The right of self-defense does not belong alone to persons engaged in the pursuit of their lawful business. It is available to every person, regardless of the nature of his business, who is assaulted, or who, upon just grounds, apprehends an immediate unlawful attack.

5. This court is under no obligation to consider a bill of exceptions which is not fairly and reasonably legible.

(Syllabus by the Court.)

Error to District Court, Cuming County; Graves, Judge.

George P. Hoy was convicted of an assault, and brings error. Reversed.

Anderson & Keefe and Geo. L. Loomis, for plaintiff in error. Frank N. Prout, Atty. Gen., and Norris Brown, Dep. Atty. Gen., for the State.

SULLIVAN, C. J. George P. Hoy, who was convicted of an assault and battery in the district court of Cuming county, seeks by this proceeding a reversal of the sentence.

The assignments of error which call in question the action of the trial court in appointing Mr. Valentine to conduct the prosecution, on the assumption that the county attorney and his deputies were under disability, cannot be sustained. The court acted upon evidence, and, the evidence not having been preserved in the bill of exceptions, the presumption will be indulged that the action was right and proper. Madden v. Norfolk Mill Co., 15 Neb. 644, 19 N. W. 636.

Attention is directed by counsel for defendant to certain affidavits bearing upon this question, and certified by the clerk of the district court as part of the record. These affidavits cannot be considered. The law, and not the clerk of the court, determines what shall constitute the record. Affidavits used upon the trial of an issue of fact are merely evidence, and can only become a part of the record by being included in the bill of exceptions. Kyle v. Chase, 14 Neb. 528, 16 N. W. 821; Frederick v. Ballard, 16 Neb. 559, 20 N. W. 870; Mercantile Trust Co. v. O'Hanlon, 58 Neb. 484, 78 N. W. 925.

As every litigant is entitled to have his theory of the case submitted to the jury, it must be assumed, in dealing with the exception to the seventh instruction, that the facts which defendant's evidence tended to prove were established. His account of the transaction upon which the prosecution was grounded is, in substance, this: While traveling on horseback on the "Blair road," he encountered a fence, which he was in the act of tearing down, when he discovered three men advancing toward him from an adjacent field, uttering oaths and opprobrious epithets. These men were Peter Hart, Harry Murray, and the complaining witness, William Murray. Knowing that they claimed the road had not been legally established and that he was a trespasser, he abandoned his purpose to tear down the fence, mounted his horse, and was about to ride away, when William got in front of him and attempted by force to detain him. Shocked and surprised by the oaths and epithets, and fearing that Hart and Harry Murray would come upon him, and in their fury kill him, the defendant struck the complaining witness several blows with a cane, in order to make him release his hold upon the horse's bridle. Failing in this, he dismounted and fled, leaving his horse behind him. Upon this evidence, defendant requested the court to charge that if he had, when the blows were struck, a reasonable and well-grounded belief that he was in imminent danger of receiving great bodily harm from Hart or either of the Murrays, it was lawful for him, as a measure of self-defense, to use such force as appeared reasonably necessary to break away from William and make his escape. The court refused this instruction, and in its stead gave the following: "The jury are instructed that if you, from the evidence, believe that, at the time the defendant is alleged to have committed the assault and battery upon the person of William Murray, the circumstances surrounding the defendant were such as, in sound reason, would justify or induce in his mind an honest belief that he was in danger of receiving from the said William Murray great bodily harm, and that the defendant, in doing what he then did, was acting from the instinct of self-preservation, then he is not guilty, although there may in fact have been no real actual danger." The instruction requested should have been given, and the one here set out should have been refused. The danger which threatened defendant was not from William Murray alone. It was chiefly from Hart and Harry Murray. It was their language and conduct that surprised, shocked, and terrified him, and finally caused him to abandon his horse and seek safety in flight. It was clearly error to require the jury to deal with the case on the assumption that William was the only person who had made or was about to make an unlawful attack. From the whole evidence, it seems to us that the beating of the complaining witness was unjustifiable, and that the verdict is right, but we cannot say that the jury would have reached the same conclusion if the court had properly instructed them with respect to the law of self-defense.

The sixth paragraph of the court's charge is criticised because it suggests the idea that the right of self-defense is available only to those who are at the time in pursuit of their lawful business. We do not condemn the instruction. When read in connection with the seventh paragraph of the charge, it is probably not misleading; but still, in view of the peculiar facts of this case, it would, we think, be better to clearly indicate that the right of self-defense is the right under all circumstances to repel with commensurate force an unlawful attack really or apparently imminent.

Digitized by Google

Some other assignments of error are discussed in the briefs, but we deem them unimportant.

The bill of exceptions in this case is scarcely legible, and we would be justified for that reason in refusing to consider it. Manifestly, the reporter of the Eighth District stands greatly in need of a modern typewriter. Those who accept the work of the machine which he is now using do so at their peril.

The judgment is reversed, and the cause remanded for further proceedings.

MORRISON v. LINCOLN SAV. BANK & SAFE DEPOSIT CO. (BUGBEE, Intervener).

(Supreme Court of Nebraska. June 19, 1901.)

RECEIVER'S SALE—NOTICE—DESCRIPTION OF PROPERTY.

1. The notice of a judicial sale should contain such a description as to inform the public of the general nature of the property to be offered at sale.

2. A receiver's sale of property must be made within the time fixed by the order of the court. Ackerman v. Ackerman, 69 N. W. 388, 50 Neb. 54, followed.

Commissioners' Opinion. Department No. 3. Appeal from District Court, Lancaster County; Holmes, Judge.

"Not to be officially reported."

Action by William G. Morrison against the Lincoln Savings Bank & Safe Deposit Company, Charles L. Bugbee intervener. From the judgment the intervener appeals. Reversed.

Frank Irvine, for appellant. Tibbets Bros. & Anderson, for appellees.

DUFFIE, C. The Lincoln Savings Bank & Safe Deposit Company went into the hands of a receiver in 1896 on the application of the plaintiff, Morrison. The appellee John E. Hill is the receiver. As such receiver he has from time to time sold portions of the assets of the corporation, and on the 17th day of June, 1899, he applied to the court for leave to sell all of the remaining assets under his control. This application was made without notice to any one, and an order was granted by the court as follows: "Upon the recommendation of the receiver, and it appearing to me that the best interests of the trust which he represents will be subserved by a sale of the assets now in his hands at public vendue, it is therefore by me ordered that the said receiver advertise all of the assets now in his hands and subject to his control, including the real estate, at public sale, within sixty days from this date, said advertisement to be had for a period of three weeks in the Lincoln State Journal, and said sale to be made subject to the further approval of this court, and that the receiver make such sale in pursuance of this orde

This order was granted on the 17th day July, 1899, but was not filed with the cle of the court until September 16, 1899, and sale of the assets was made by the recei September 25 and 26, 1899, the sale havi been adjourned from September 19th, the da first fixed therefor. It will be observed th the sale as advertised and fixed by the rece er was not to take place until four days a er the expiration of the authority granted the order, and that no actual sale took pla until several days thereafter. On the 19 day of September, Bugbee, the appellant, fi his petition of intervention in this case, all ing that the officers of the defendant cor ration had refused to appear and protect t interest of the bank, that the property w being mismanaged and dissipated by the ceiver, and that he, as a stockholder, w interested and desired to intervene in t action to protect his own interest and t interest of the corporation. On the 3 day of September he filed his motion to aside the sale of the assets of the bank l on September 25th and 26th. The court fused this motion, and confirmed the s and the intervener has taken an appeal to t court.

Many errors and irregularities in the p ceedings leading up to the sale and its c firmation are urged by the intervener a appellant, and it is insisted that through the entire proceedings of this receivership court has dealt with the assets in a summa manner, without notice to any one, and a method entirely outside of what is rega ed as regular judicial procedure. In bel of the receiver and appellee it is urged t the proceedings are governed by the ba ing act (chapter 8, Comp. St. 1901); that Legislature has conferred upon receivers pointed to take possession of the assets an insolvent bank authority to dispose of assets without any order of court; and t the order made in this instance was not tended to restrict the statutory power of receiver, but rather to urge the receiver the performance of his duty, and to push sale of the assets to final completion.

As we read the statutes, the receiver p ceeds at all times in the disposition of assets under the direction of the court. of the duties imposed upon him by sect 35 of the act is to "sell all real and perso property belonging to such bank on s terms and conditions as the court or ju shall direct." Neither the letter nor sp of the statute authorizes the receiver to t any steps in the direction of disposing the assets without the authority and di tion of the court. This contention of the ceiver is somewhat in conflict with anot line of argument which he pursues, in wh it is insisted that under the statute the c "appointing the receiver and the receiver made the conservators of the assets of bank, with full power to sell at public

¶ 1. See Judicial Sales, vol. 31, Cent. Dig. § 27.

Digitized by Google

private sale all real estate and personal property belonging to the bank, and convert such property into cash for the purpose of distributing it among the creditors of the bank, and turning over the surplus, if any, to the stockholders or their representatives, the officers of the bank; that the receiver is not compelled to make any advertisement whatever of any sale of the property, either real or personal; that he is not compelled to make any appraisement of the property; that he is only compelled to act under the instructions and advice of the court, and, when acting fairly and properly performing his duties as receiver, is guilty of no fraud or misconduct."

The contention that the court and receiver may deal with the assets of the corporation in this summary manner has been disposed of by this court in at least two cases. In State v. German Savings Bank, 50 Neb. 734, 70 N. W. 221, it is said, at page 736, 50 Neb., page 222, 70 N. W.: "The proceeding is not one merely ex parte, whereby the court, as a sort of administrator, winds up the estate, but it is in its nature an adversary proceeding. The fact that the corporation consented or acquiesced in the appointment of the receiver, and in the general directions given him by the first order, might properly estop the bank from afterwards asserting that such order was improvidently made. But the corporation remains the defendant in the case. It has rights which it is entitled to protect. The corporation as such is interested in the economical and prudent management of its affairs, and as the defendant in the case, and the only defendant, it has the right to be heard in subsequent proceedings." In State v. Fawcett, 58 Neb. 371, 78 N. W. 636, the court again refused the rights of a bank placed in the hands of a receiver under chapter 8 of our Compiled Statutes, in answer to the same argument that is now made by the receiver in this case. We quote from the opinion: "But it is said that the banking act contains special provisions concerning such matters; that the ordinary procedure is not applicable. Indeed, the argument is that the banking act provides a summary method of winding up an insolvent bank, and if any order be appealable it is only that appointing the receiver in the first instance; that thereafter the functions of receiver and court are administrative, and their acts not subject to review. It is said that this is the clear policy of the act. If so, the act is clearly unconstitutional, and we are by no means disposed to so hold. Sections 34 and 35 of the banking act provide that the attorney general shall apply for a receiver whenever it shall appear to the banking board, 'from any examination or report,' that certain facts exist. Provisions are then made for the liquidation of debts, conversion of assets, and complete winding up of the affairs of the bank. It would be monstrous to say that an inspection of a report, or a consideration of the result of an examiner's work, by an administrative board, should lead to a summary taking and disposition of property, without any hearing other than that on the application for a receiver. If the proceeding be judicial, it implies a right to be heard according to the usual procedure; if it be not judicial, then there is no due process of law, and the powers could not, under the Constitution, be conferred on a court. But an entirely similar argument was made in State v. German Savings Bank, 50 Neb. 734, 70 N. W. 221, which was an appeal from an order with reference to this same bank, and directing proceedings against the stockholders. That a case under the banking act is an adversary, judicial, and not administrative proceeding was there distinctly held, as it was also held that an order directing the receiver falls within the general provisions of the Code, and is appealable. That case is here in point."

It is true that the bank is not here represented; that its officers have declined for some reason to take any interest in the progress of this suit and the settlement of the affairs of the bank; and for this very reason the intervener has been admitted into the case in order that he may exercise the same rights which the officers of the bank would possess did they desire to appear. It having been determined that these proceedings are adversary in their nature, that they are to be governed by the same rules that govern other cases, it is evident that the sale of the assets, made in the manner they were, cannot be sustained. The authority granted the receiver by the court to make the sale had expired before the sale was made. The advertisement, if not entirely void, was of a nature not to be commended. It failed to give any description of any part of the property about to be sold. The very purpose of advertising a sale is to call the attention of the public to the property which is about to be offered. The only description of the property contained in the advertisement was the "remaining assets of the bank." What these assets consisted of was not mentioned, and no one could form any idea whether these assets contained any property which he desired to purchase. As the order of the court will have to be reversed, it is unnecessary to discuss other questions that have been raised in the record, and we need only say that, if the rule laid down in the case above quoted from is observed by the court and the receiver, there can be no trouble in finally and speedily closing up the affairs of the corporation.

We recommend that the order of the district court be reversed, and the case remanded for further proceedings.

ALBERT, C., concurs. AMES, C., did not hear the argument or participate in the decision.

Reversed and remanded.

Digitized by Google

SPORER v. McDERMOTT et al.*

(Supreme Court of Nebraska. July 3, 1903.)

TRIAL—OVERRULING DEMURRER — FINDING — SPECIFIC PERFORMANCE—AGREEMENT TO MORTGAGE CROPS.

1. The overruling of a demurrer does not prevent a finding, after the evidence has been taken, that there is no cause of action.

2. An agreement to execute, after they are growing, a mortgage upon crops, may be enforced specifically in equity if sufficiently definite in its terms and clearly established, and the situation of the parties and property is such that justice and equity call for such a remedy.

3. It is no objection to such an agreement that the crops referred to were not in being when it was made.

Holcomb, J., dissenting.

(Syllabus by the Court.)

Commissioners' Opinion. Department No. 1. Error to District Court, Saunders County; Sornborger, Judge.

Action by George Sporer against Thomas McDermott and others. Judgment for defendants, and plaintiff brings error. Reversed.

J. K. Vandermark and L. E. Gruver, for plaintiff in error. John H. Barry, for defendants in error.

HASTINGS, C. This is an action brought by the plaintiff to obtain the specific performance of a rent contract to secure $275, the rental of a farm for one year from March 1, 1900, by a chattel mortgage upon the crops raised upon the farm. The petition includes two causes of action, and alleges removal of certain fixtures off the place, and asks an injunction against any disposition of the crops or the removal of the fixtures.

The court finds as to the latter that they belonged to defendant, and plaintiff had no interest in them. Of this finding no complaint is made. The court finds, as to the claim for specific performance of the agreement to mortgage and the enforcement of the lien of such mortgage, that plaintiff owned the land; that he leased it to the defendant McDermott for one year from March 22, 1900; that the latter joined in the execution of the lease alleged; and knew the contents of it; that defendant raised on the place the 80 acres of corn on which the lien was sought; that he sold the corn to the other defendant with the purpose of defeating plaintiff's lien, and not in good faith; that defendant Hotchkiss, before the purchase of the corn, or the payment for it, knew of defendant's intention and fraudulent purpose, and knew that plaintiff claimed a lien on the corn for the rental of the land, and is not entitled to be considered an innocent purchaser; that the agreed rental was $275, payable February 1, 1901; that plaintiff never obtained possession of the property; and that defendant at all times repudiated and denied any liability under the agreement to mortgage the crops, and was at the time of the commencement of the action wholly insolvent. The court found as conclusions of law: (1) That the agreement in the lease relating to the mortgage of crops was too indefinite to warrant a decree of specific performance; (2) that it was unenforceable, because the property was not in existence when the lease was made; (3) that the agreement carried no lien; (4) that the plaintiff was entitled to no specific performance of the alleged agreement to execute a mortgage, and dismissed plaintiff's action. Subsequently the second and third findings were stricken out in passing upon a motion for a new trial, but the motion itself was overruled.

It should be stated that to the plaintiff's petition a demurrer was filed on the ground of want of jurisdiction of defendant's person, want of jurisdiction of subject-matter of the action, and that the petition did not state facts sufficient to constitute a cause of action. This demurrer was overruled by the court, and plaintiff in error now says that such action is not consistent with the rendering of a judgment for dismissal after finding substantially all the facts alleged to be true, and that the decree is wrong because of this ruling upon the demurrer. It does not seem necessary to discuss this contention at any length. Nothing is cited to sustain it, except the case of Marvin v. Weider, 31 Neb. 774, 48 N. W. 825, and Dolen v. Buchanan, 43 Neb. 856, 62 N. W. 233, and Kleckner v. Turk, 45 Neb. 197, 63 N. W. 469. The first of these cases merely remarks that in districts having more than one judge any ruling made by one of them is to be respected by any other judge trying the same case. It finds the several rulings first entered to have been right, and reverses the subsequent action as being both wrong and contrary to the first ruling. The other two cases incidentally refer to this one with approval in finding that they presented no occasion for applying the doctrine. None of them go to the length of holding that a ruling on a demurrer in the same court involves necessarily an adherence to that ruling throughout the case if it is found to be wrong. It should merely be recognized as having been made, and valid until properly set aside. The ruling upon the demurrer surely cannot conclude a trial court from passing upon the evidence in any way, and in this instance two causes of action are found against by the trial court, and no complaint is made as to one of them. The alleging of this cause of action may have led to the overruling of the demurrer.

The real question in this case arises upon the first and fourth conclusions of law as left by the court when applied to the agreement in question. That agreement is as follows:

"Sporer hereby leases the South East quarter section 32, Town 14 R 5 Saunders County, Nebraska, for a period of one year from the 1st day of March, 1900, on the following conditions:

¶ 1. See Judgment, vol. 30, Cent. Dig. § 1167; Pleading, vol. 39, Cent. Dig. § 567.

*For dissenting opinion, see 96 N. W. 659.

Digitized by Google

"Two Hundred and seventy-five ($275) Dollars payable on the 1st day of Feby. 1901, drawing ten per cent. interest after maturity said note to be secured by a chattel mortgage on all the crop planted and sown on the above described land except a small parcel of land to be planted to corn containing one acre more or less and a garden patch for vegetables, said mortgage to be executed as soon as crops are planted on or about the 10th day of June, 1900. Thomas McDermott agrees to take good care of dwelling house, other houses, barns, sheds, granaries, pens, cribs and fences and return the same in as good condition as they now are, wear and tear and accidents excepted, and to receive them as they now are except three dollars repair on the dwelling house.

Signed this 22nd day of March, 1900.

"Geo. Sporer.

"Thomas his X mark McDermott.

"In presence of:

"J. K. Vandermark."

As there was no complaint or objection on the part of the defendants to any of the trial court's findings, and they are seeking to uphold the decree, they are concluded by them. These findings show that the farm was rented to defendant McDermott in accordance with this agreement, and that the agreement was for $275 rent, and that it was duly executed by McDermott. In all these particulars the contract is rendered sufficiently definite by performance by each of the parties. The only question is, whether or not the contract was definite and precise enough to call for its specific performance in the single matter of mortgaging the crop. The trial court, by implication, in its original two findings had determined that there was an agreement on the part of the defendant to mortgage this crop. It distinctly ascertained the amount of that mortgage, and when it was payable. The agreement is certainly specific as to both what was to be secured and how, and upon what the security was to be given. The status of the property, as found by the court, clearly warrants the interposition of a court of equity, if the agreement is plain and distinct enough to be specifically enforced in the particular respect in which performance was refused. The doctrine stated in Parsons on Contracts (volume 3, p. 354, 7th Ed.), cited by plaintiff in error, seems clearly applicable: "The contract of which performance is sought must be clearly proved, and its terms should be so specific and distinct as to leave no reasonable doubt of its meaning. But the court is bound by no technical rules in this respect. Nor does it greatly regard the form of the contract." It seems clear that plaintiff was entitled to have his mortgage, and to its enforcement as against the defendant McDermott and his fraudulent grantee, Hotchkiss.

It is, however, claimed by defendants in error that the two findings, as originally made by the trial court, that this agreement to mortgage a crop not yet planted was wholly void, follow the true rule of our state, and that the decree should be upheld, notwithstanding the trial court afterwards struck out those findings. This is asked on the ground that the decree is right, and any want of consistency in the findings and decree would be error without prejudice. It is true that there are several cases cited by the defendants in error from this court holding that a mortgage upon property not then in being creates no lien. None of these decisions, however, go so far as to say that an agreement thereafter, and when the property shall be in existence, to mortgage it, is invalid; and we do not see how such a rule of law could be sustained. An executory contract for the sale at some time in the future of property not then in existence is entirely valid; indeed, the right to make it is almost essential to the carrying on of many manufacturers' and producers' business. It would seem that, if an agreement at a future date to transfer absolutely the title to property thereafter to be produced is good and valid, an agreement to transfer such title conditionally and by way of mortgage security would be equally good and valid, notwithstanding that the property was not at that time in existence. Of course, if the property never should come into existence, there could be no recovery of damages or of specific performance of the agreement to mortgage it. But where, as in this case, it did come into existence, and all of the circumstances contemplated by the agreement arose, it would seem that there could be no doubt of its validity. In the recent and carefully considered case of Battle Creek Valley Bank v. First National Bank (Neb.) 88 N. W. 145, 56 L. R. A. 124, contracts of sale and of mortgage are distinctly placed upon the same footing. It is, of course, necessary in this state, as there set forth, that, in order to create a legal right in a specific thing, there must be a legal conveyance of that thing while in existence. In a court of law an executory contract of sale conveys no right to the thing itself, but in a court of equity, and in an action for specific performance, the legal doctrine would seem out of place. The action itself is brought to supply and obtain performance of the intervening act, which is necessary to convert a mere contract right against the promisor into an actual claim against the thing itself. As against such an action, where the facts pleaded and proven rendered this remedy appropriate, and even necessary, it would seem absurd to say that the legal right does not yet exist. This action is brought expressly to enable plaintiff to acquire it when inequitably refused. It is held on good authority to apply to contracts relating to things not then in being. Pomeroy's Equity Jurisprudence, §§ 1236, 1237 (2d Ed.). It is not necessary, however, in this case to decide whether

Digitized by Google

not such an executory agreement is enforceable generally. It seems clear that it must be so as to crops on land where the agreement is to secure rent. At the place in Pomeroy's Equity above cited, after stating that a sale or mortgage of things not in being gives no legal title, he excepts things which have a potential existence, and in the note cites crops to be grown on lands demised in consideration of such an agreement. A right in such crops under such an agreement has been so often upheld that it is not necessary to cite cases. Examples are Arques v. Wasson, 51 Cal. 620, 21 Am. Rep. 718, and Apperson v. Moore, 30 Ark. 56, 21 Am. Rep. 170. It appears that the corn crop was sold to one who was entirely aware of the agreement, and of the plaintiff's claim under it, and that it brought about $800.

It is recommended that the decree of the district court be reversed, and cause remanded, with directions to enter a decree for the plaintiff for $275 and interest at 7 per cent. per annum from February 10, 1901, and costs, and that execution be awarded against defendants.

DAY and KIRKPATRICK, CC., concur.

PER CURIAM. For the reasons stated in the foregoing opinion, the decree of the district court is reversed, and cause remanded, with directions to enter a decree for the plaintiff for $275 and interest at 7 per cent. from February 10, 1901, and costs, and that execution be awarded against defendants therefor.

HOLCOMB, J. I dissent from the views expressed in the foregoing opinion which are concurred in by a majority of the court, and will give my reasons therefor in a separate opinion.

RYAN v. DONLEY et al.

(Supreme Court of Nebraska. July 3, 1903.)

APPEAL — WAIVER OF ERRORS — CHATTEL MORTGAGE—FORECLOSURE — INJUNCTION — LEASE—COVENANT—ENFORCEMENT.

1. A stipulation in an action pending in the district court that the property which is the subject of the controversy shall be sold, and the proceeds deposited with the clerk until it shall be determined which party to the action is entitled to them, and that, if the sale shall be made before the matter shall be fully litigated, the funds shall be paid out when the court shall have made an order that one or the other party is entitled to them, is not effectual as a release of errors and a waiver of the right of review in this court. An intent by the parties to bar themselves from the right of access to the courts must be manifested by express words or by the strongest implication.

2. The pendency of an action for the foreclosure of an alleged chattel mortgage, in which a temporary injunction has been granted restraining the defendant from selling, consuming, or disposing of the property in controversy during the pendency of the action, withdraws the property from pursuit by general creditors of the alleged mortgagor in another court by me of the ordinary procedure of a suit at law, ju ment, and execution. In such case the prope is in the constructive custody of the law.

3. A covenant in an unrecorded lease for term of five years at an annual rental, paya annually, to the effect that the lessee shall the 15th day of June in each year execute the lessor a chattel mortgage on the grow crops to secure the payment of the rent for t year, will be specifically enforced against lessee and those claiming title to the crops, quired after the commencement of the suit, establish the lien of the landlord, and to sell property as upon foreclosure.

(Syllabus by the Court.)

Commissioners' Opinion. Department 3. Appeal from District Court, Saund County; Sedgwick, Judge.

Action by Michael D. Ryan against Patr Donley and others. Judgment for plaint and Lineus W. Martin and others appe Affirmed.

Burr & Burr and V. L. Hawthorne, for pellants. John H. Barry, for appellee.

DUFFIE, C. In 1889 the plaintiff and pellee, Ryan, being the owner of a farm Saunders county, executed a lease thereof one Patrick Donley for the term of five ye beginning on the 1st day of March, 1896, serving an annual rent of $440, payable the 1st day of January. It was covenan in the lease that, if the average yield crops of all kinds in any one year should less than 2 bushels to the acre, the les should accept one-half the same in lieu the cash rent reserved for that year, but t the lessee should "execute a promissory n of $440 on June 15th of each year during term of the lease for the payment of the r for such year, said note to be secured chattel mortgage on all the crops to be r ed on said premises for such year." Don went into possession under the lease, wh was not filed for record, but in 1897 refu to execute the note and mortgage provided in the above-recited covenant, and on the 3 day of July in that year Ryan began t action, alleging the breach of the coven and the insolvency of Donley, and that latter was threatening and about to sell, pose of, and consume the growing crops, by so doing defeat the plaintiff of his rent that year, and that the average yield of crops for that year would exceed 20 bush per acre. The petition prayed for an inju tion restraining the defendant from selli incumbering, or consuming the crops, or of them, and that the plaintiff be decreed have a mortgage on the same for the sum $440 as of date June 15, 1897, and that mortgage be foreclosed, and the property thereunder, and the proceeds of such s or so much thereof as should be necess applied to the satisfaction of said alleged debtedness and costs of suit. A tempor injunction was allowed as prayed, and order therefor filed with the papers in case, but no service thereof or of the s

Digitized by Google

mons is disclosed by the transcript, and it does not appear therefrom when actual knowledge thereof first came to the defendant or to the subsequent parties to the case. On the 13th day of December Donley confessed a judgment in the county court in favor of the appellant Lehr for the sum of $381.30 and costs of suit, and on the same day an execution thereon was issued to the appellant Martin, as constable, and by him levied on a quantity of grain raised on the premises in that year, and claimed to be subject to the alleged lien of the plaintiff's lease. On the 16th day of December the plaintiff filed a supplemental petition, joining Lehr and Martin with Donley as defendants thereto, and setting forth the judgment, execution, and levy, and alleging that all of such proceedings were had with knowledge by all the parties thereto of the pendency of the plaintiff's action, and of the injunction therein, and in contempt thereof and of the court, and were void, and praying an additional injunction restraining Lehr and Martin from selling or removing the property, or any of it, under the levy. An additional temporary injunction was granted as prayed. A motion to dissolve this latter temporary injunction was made by Lehr and Martin, and overruled. Then they filed a general demurrer to the supplemental petition, which was also overruled, whereupon they filed an answer thereto, admitting the judgment, execution, and levy and the existence of the lease, and denying every other allegation therein contained. The plaintiff filed a reply, but it contained no new matter calling for consideration by the court. Donley entered an appearance, but did not answer either of the plaintiff's pleadings, or otherwise participate in the defense. On the 11th day of January, 1898, the plaintiff and Lehr made a stipulation to the effect that the latter should haul the grain to market and sell it, and receive a certain compensation from the proceeds for his service in so doing, and that the residue of such proceeds should be "deposited with the clerk of the district court until it is determined which party—the said Lehr and Martin or Ryan—is entitled to hold the property so levied upon in favor of Lehr by the constable, Martin, and when the court shall have made an order that one or the other of the parties, viz., Lehr or Ryan, is entitled to the proceeds of the sale of said property, in the event of the sale of the same before the matter is fully litigated, then the clerk shall pay the same according to the order of said court." The property was accordingly sold, and the proceeds, amounting to $474.95, deposited with the clerk pursuant to the stipulation, and out of it Lehr was paid $27, his compensation for making the sale. At the May, 1898, term, Donley was adjudged in default for want of answer, and after a trial without a jury the court entered a judgment upholding the lease as a valid lien by way of mortgage upon the property in controversy for the sum of $440 and interest, adjudging the execution levy to be void as in violation of the injunction, of which the judgment creditor and constable were found to have notice, and making the temporary injunction perpetual, and directing that the money, the proceeds of the sale of the property, and then in the hands of the clerk, be applied, first, to the payment of the costs of the suit, second, the payment of $27 compensation to Lehr for selling the property pursuant to the stipulation, and, third, to the satisfaction of the plaintiff's lien; the surplus, if any, to be retained by the clerk subject to the further orders of the court.

The circumstances are such that it will be convenient to begin with the discussion of the contentions of the appellee, plaintiff below. He insists, first, that the above-recited stipulation providing that the property should be sold, and the proceeds disposed of as the court should order, amounted to a release of errors and waiver of the right of appeal, and submitted the matter finally to the judgment of the trial court. There is no such expressed agreement in the instrument, and, in its absence, an intent by a litigant to bar himself of the right of access to the courts should only be made out by the strongest implication. Such an inference cannot, in our opinion, be drawn from a stipulation requiring the money to remain in the hands of the clerk until it is determined which party is entitled to it, and expressly contemplating that the matters in controversy shall be "fully litigated." In our opinion, the stipulation contemplates a final determination of the suit after it has been fully litigated, which includes the right to litigate in this court if either party desires to do so.

The more important question is the right of the plaintiff to have his contract with Ryan enforced, and a lien in his favor established against the crop in question. While, in general, a court of equity will not take upon itself to decree specific performance where chattel property alone is concerned, its jurisdiction to do so cannot be doubted, and no good reason exists against the exercise of the jurisdiction in any case where compensation in damages would not furnish a complete and satisfactory remedy, or where, as in this case, a judgment for damages would be of no benefit because of the insolvency of the defendant. Every contract, the subject of which is susceptible of substantial enjoyment, should be enforced, provided always the circumstances surrounding and connected with the contract bring it within the rules entitling the party to equitable relief. Waterman on Specific Performance, § 11. But, further than this, the rule that a contract respecting chattels will not ordinarily be specifically enforced, does not apply to an agreement for a lien or security upon personal property, where there can be no remedy at law. Beach on Modern Equity Jurisprudence, § 598; Waterman on Speci-

Digitized by Google

Performance, § 20. In Triebert v. Burgess, 11 Md. 452, it was held that a parol contract for a mortgage of personal property, based upon a valuable consideration, may be enforced in a court of equity if the contract is not such as the statute of frauds requires to be in writing.

It is insisted, as we understand from the brief of the defendant, that the rule now firmly established in this state that no valid lien by way of mortgage can be created on property not in esse applies equally to an agreement to give a lien on property not in esse by executing a mortgage on the same when it comes into existence. We do not think that this position can be sustained. It is evident that to support a present grant the thing granted or conveyed must have a present existence. If it has no existence, there is nothing for the grant to operate upon, and in the eyes of the law it is a mere nullity. A chattel mortgage, therefore, which purports to cover property not in existence, has nothing upon which to operate, and, the mortgage being an executed contract with nothing further to be done by either party, the rights of the parties are fixed and determined by the mortgage as made. If the property described therein had no existence, so that nothing was conveyed thereby, a court could not enlarge the contract as made, or amend it to include more than the parties had covered by their agreement.

The case at bar is different. The contract is executory in its character. It is an agreement to give security at a future day, and the authorities are all agreed that such an agreement may be enforced. In Hale v. Omaha National Bank, 49 N. Y. 626, a case where, as here, the lessees were insolvent, the court said: "Had the lessor claimed a specific performance of the agreement and the perfecting of a lien upon the furniture as against the lessees while they remained in possession of the demised premises and after the furniture had been placed in the hotel, no one would have questioned the right of the landlord to the security agreed upon, and no court exercising the ordinary jurisdiction of courts of equity would have hesitated to decree specific performance and compelled the execution of the proper instrument to give the lien." The distinction between a mortgage actually executed purporting to cover after-acquired property and an agreement to execute a mortgage thereon after the property had come into existence was evidently in the mind of Judge Holcomb when he formulated the opinion in Brown v. Neilson, 61 Neb. 765, 86 N. W. 498, 54 L. R. A. 328, 87 Am. St. Rep. 525. At page 768, 61 Neb., page 499, 86 N. W., 54 L. R. A. 328, 87 Am. St. Rep. 525, he remarks: "The stipulation does not comprehend within its meaning that the lessee will, after the property is acquired, execute a mortgage or other instrument incumbering the property for the benefit of the lessor. No original and independent contract creating a new lien can be inferred as the intention and contemplation of the parties without doing violence to the language used. It does not purport to be an agreement to give, in the future, a lien on the property then owned by the lessees on the leased premises; but by its own terms and provisions the instrument evinces an attempt to establish a lien in future on property at the time not in esse. It is a contract or attempt at contract for a sale and transfer by way of mortgage, and not a contract to give a mortgage."

It is further insisted that, if the defendant's agreement to give security upon the crop had any force or effect, it could not be greater than that created by a chattel mortgage given on goods actually owned and in the possession of the mortgagor, and that such a mortgage is void as to creditors in the absence of the recording of the mortgage. This is true unless the mortgagee takes possession of the mortgaged property before the right of the creditor to the property has accrued by his seizure of the same. Meyer v. Miller, 51 Neb. 620, 71 N. W. 315. This requires us to determine whether, by commencing this action to enforce the agreement made by Donley to give a mortgage on the crop, and for a foreclosure and sale of the same, the plaintiff, in a legal sense, took possession of the property, or placed it within the possession of the court, which, in legal effect, would be equally effective. It is a rule well known to the profession that, where two courts have concurrent jurisdiction, that which first takes cognizance of the case has the right to retain it to the exclusion of the other; that, where property is in gremio legis, if it be a court of rightful jurisdiction, no other court can interfere and wrest from it the jurisdiction first obtained; and that a sale, under an order of one court, of property in the custody or possession of another, conveys no title. Leigh v. Green, 62 Neb. 344, 86 N. W. 1093, 89 Am. St. Rep. 751, and cases cited at page 354, 62 Neb., page 1097, 86 N. W., 89 Am. St. Rep. 751. In the case now under consideration the court was asked to establish a lien against the property, to foreclose the lien, and to order a sale of the property to satisfy the plaintiff's claim. The property being chattel in its nature, a sale thereof could only be made effective by delivering possession to the purchaser. The relief asked from the court could only be given by the court turning over to the purchaser at the sale physical possession of the goods. We think that in cases of this character, to give the court exclusive jurisdiction of the property involved in the suit, a receiver need not be appointed, or that any officer of the court should actually seize and hold the property. We believe and hold that, where the relief asked from the court requires it, if granted, to pass possession of the property to a purchaser at a sale which may be ordered, that the bringing of the suit and the

Digitized by Google

service of process places the property within the jurisdiction of the court so far as to render ineffective any sale of the same made by another court of concurrent jurisdiction in a suit subsequently commenced. Adams v. Mercantile Trust Co., 66 Fed. 617, and note to same case 15 C. C. A. 6.

We recommend an affirmance of the decree appealed from.

ALBERT, C., concurs.

PER CURIAM. For the reasons stated in the foregoing opinion, it is ordered that the judgment heretofore rendered by this court be vacated, and that the decree appealed from be affirmed.

HOLCOMB, J. I concur in the judgment of affirmance only because it is held by a majority of the court in another opinion filed at this session (Sporer v. McDermott [No. 12,-203] 96 N. W. 232) that an agreement to give a mortgage on crops not in existence at the time may thereafter be specifically enforced.

FISK v. OSGOOD et al.

(Supreme Court of Nebraska. Nov. 20, 1901.)

JUDGMENT NUNC PRO TUNC—JOURNAL ENTRY —CORRECTION.

1. The authority of courts, both of law and equity, to enter judgment or decree nunc pro tunc, is an inherent power. Van Etten v. Test, 68 N. W. 1023, 49 Neb. 725, followed.

2. Every change made by the clerk in a journal entry previously approved by the court is void, unless made in pursuance of section 604 of the Code of Civil Procedure.

Commissioners' Opinion. Department No. 1. Appeal from District Court, Johnson County; Stubbs, Judge.

"Not to be officially reported."

Action by W. S. Fisk against Mary K. Osgood and others. Judgment for plaintiff, and defendants appeal. Reversed.

S. P. Davidson and D. F. Osgood, for appellants. Hugh La Master, Kelligar & Ferneau, and M. B. C. True, for appellee.

DAY, C. W. S. Fisk brought this suit in the district court of Johnson county against Mary K. Osgood and Daniel F. Osgood to foreclose a mortgage on the east half of lots 4 and 5, in block 8, of Kershaw's addition to the city of Tecumseh. The county of Johnson and Sarah M. Wright were also made parties defendants. The county answered, setting up its lien for delinquent and unpaid taxes for several years on the east half of lots 3, 4, and 5 of said block. Sarah M. Wright answered, and set up, by way of cross-petition, a prior mortgage upon the east half of lots 3, 4, and 5. Defenses were interposed by the Osgoods. The cause was tried to the court, whose findings, so far as they are pertinent to the questions presented by this appeal, are as follows: "There is due the county of Johnson on the tax lien set up in the cross-petition the sum of $194.62, which is a first lien on the premises described in plaintiff's petition. There is due the defendant Sarah M. Wright the sum of $113.33; that in order to secure the payment of said note, D. F. Osgood executed and delivered a mortgage upon the premises described in plaintiff's petition, * * * and that the same is a second lien upon said premises, subject and inferior to the lien of the county; * * * that there is due the plaintiff, on the note set up in the petition, the sum of $630.33; that the Osgoods executed and delivered a mortgage on the premises described in the petition." On these findings the court decreed that, unless the said sums were paid by the Osgoods within 20 days, their equity of redemption be foreclosed on said premises, to wit: "The east one-half of lots 4 and 5 in block 8 of Kershaw's addition * * * shall be sold." An appeal from this decree was taken by Mary K. Osgood, and affirmed in this court, being reported in 58 Neb. 486, 78 N. W. 924. After certifying the transcript of the record on that appeal, the clerk of the district court, apparently without the knowledge of any of the parties to the action or the court, took the liberty of interpolating, in that portion of the decree ordering a sale, the word and figure "three (3)" in the description of the property, thus making the decree read, "the east one-half of lots 3, 4 and 5," instead of "the east one-half of lots 4 and 5." An order of sale was thereupon issued to the sheriff, describing the property to be sold as the east one-half of lots 3, 4, and 5, and under this order of sale the premises were sold to plaintiff. Mary K. Osgood filed objections to the confirmation of the sale, the basis of the objection being that the sale was of the east half of lots 3, 4, and 5, whereas the decree as entered did not include or create a lien upon the east half of lot 3. Before the objections to the confirmation were heard, the plaintiff filed a motion for a nunc pro tunc entry of decree, and, upon hearing the evidence as to the original decree, the court found that the decree as pronounced on January 31, 1896, covered and included the east half of lots 3, 4, and 5, in block 8, and that it was not recorded as rendered, but, by inadvertence, the east one-half of lot 3 was omitted in the description of the property ordered to be sold by the decree. The court thereupon ordered that the journal entry be amended as of date January 31, 1896, to read as follows: "It is therefore considered, ordered, adjudged and decreed by the court that unless the defendants, D. F. Osgood and Mary K. Osgood, shall within twenty days from the entry hereof pay * * * the defendants, Mary K. Osgood and Daniel F. Osgood's equity of redemption be foreclosed on said premises to-wit: The east half of lots

¶ 1. See Judgment, vol. 30, Cent. Dig. § 525.

Digitized by Google

3, 4 and 5 in block 8 * * * shall be sold." As a part of the same order, the court overruled the objections to the confirmation, and confirmed the sale. From this order of confirmation and from the nunc pro tunc decree, Mary K. Osgood appeals.

The rule is well established that the courts have inherent power to make a nunc pro tunc order. If a judgment in fact was rendered, if an order was made, and such judgment or such order be not properly recorded, it is competent for the court at any time afterwards, in a proper proceeding and upon a proper showing, to render nunc pro tunc the judgment or order actually made. Van Etten v. Test, 49 Neb. 725, 68 N. W. 1023; Belkin v. Rhodes, 76 Mo. 643; Gibson v. Chouteau's Heirs, 45 Mo. 171, 100 Am. Dec. 366; Wachsmuth v. Orient Ins. Co., 49 Neb. 590, 68 N. W. 935. We think it is clear from the entire record that the nunc pro tunc decree is wrong, as it gives the plaintiff a lien upon the east one-half of lot 3, whereas his mortgage did not include lot 3. The plaintiff had no lien upon this lot, and it should not have been sold to satisfy his mortgage. It is apparent that what was intended was to create a first lien upon the same property in favor of Sarah M. Wright, and a third lien in favor of the plaintiff upon lots 4 and 5. The decree should have made suitable provisions for the appraisement and sale of lot 3, and the distribution of the proceeds of the sale thereof separate from the sale of lots 4 and 5.

There is some uncertainty as to the time when the change was made in the decree, but not as to the mode. It was made by the clerk without notice to the parties, and without direction of the court. The clerk testified on the hearing that he made the change within a few days after the entering of the original decree. That was on January 31, 1896; and yet, on June 17, 1896, the same clerk certified the record of the case to this court, in which the decree was recited as it had been first spread on the journal. That was the decree before this court, and which was by this court affirmed. Section 604 of the Code provides as follows: "The proceedings to correct mistakes or omissions of the clerk or irregularity in obtaining a judgment or order, shall be by motion upon reasonable notice to the adverse party or his attorney in the action." Any change or correction in the journal as approved by the clerk, otherwise than in accordance with the requirements of this provision of the statutes, is void. It is therefore recommended that the order of the district court entering the nunc pro tunc decree be reversed, and that the order confirming the sale be reversed at the costs of the plaintiff, commencing with the issuance of the order of sale; that plaintiff have permission to apply for a nunc pro tunc order correcting the decree and findings entered January 31, 1896, to conform to the facts found; and that a reappraisement and sale be ordered.

It is therefore recommended that the ju ment be reversed, and the cause remar for further proceedings.

HASTINGS and KIRKPATRICK, concur.

Reversed and remanded.

MacCALL v. LOONEY.

(Supreme Court of Nebraska. July 3, 19

DEFAULT JUDGMENT—EQUITABLE RELI APPEAL—WAIVER—PLEADING— GROUNDS OF RELIEF.

1. The provisions of section 602 of the of Civil Procedure are concurrent with eq jurisdiction to relieve against judgments the term at which they are rendered.

2. Where issues have been made, and had on the merits, the defeated party sh not be heard to complain for the first tim appeal in this court that the form of a should have been by petition under section of the Code of Civil Procedure, instead o petition in equity.

3. An objection to a petition to set asi default judgment, which alleges that the j ment complained of was rendered October at the October, 1900, term of court, and no knowledge of it reached the defendant May following, on the ground that it does show that the October term had adjourne that time, will not be entertained when r for the first time on appeal in this court.

4. A misunderstanding between home a neys of a defendant sued in a county more 200 miles from his residence—where service obtained through his temporary presence —and attorneys at the place of suit, by re of which the latter supposed that their em ment was only temporary, but the former the defendant regarded it as general, and the entire case, for which reason a valid fense was not presented, and a judgment rendered on an ex parte hearing, is suffi ground for setting the judgment aside on tion after the term, where the defendant acted with reasonable diligence in preparing defense, and with promptness on learning o judgment.

5. Such a misunderstanding *held* to be ciently set forth in the pleading and the co finding that it existed, sustained by the dence.

(Syllabus by the Court.)

Commissioners' Opinion. Department 1. Appeal from District Court, Douglas C ty; Dickinson, Judge.

"Not to be officially reported."

Action by John H. MacCall against miah P. Looney. Judgment for plaintiff. fendant appeals. Affirmed.

E. G. McGilton and James H. McIntosh appellant. Gaines, Kelby, Storey & Ma for appellee.

HASTINGS, C. This is an appeal fro decree vacating a judgment and grantin new trial in an action by J. P. Looney ag J. H. MacCall, in which action judgment recovered by Looney on October 6, July 12, 1900, MacCall filed his petitio vacate the judgment on the ground of understanding between his attorneys a

¶ 2. See Appeal and Error, vol. 2, Cent. Dig.

Google

home in Lexington and Green & Breckenridge, of Omaha, because of which he relied upon Green & Breckenridge to present his defense, and they, on the other hand, had merely supposed that they were employed to render some preliminary services, which had been specifically requested by Warrington & Stewart, and did not suppose they were generally employed in the case, and did not give it attention. It is also alleged that there was an understanding and agreement that cases were not to be taken up for trial pending the presidential election of 1900, and that no jury would be in attendance. Another ground alleged for opening the judgment is that defendant obtained his judgment by willful perjury in swearing from personal knowledge to the issuance of $5,000 of capital stock in the Meridan Canal Company to MacCall, and to its being deposited as collateral security with the Dawson County National Bank for the payment of a note, when in truth no such certificate was ever issued or deposited as collateral security.

Defendant Looney first entered a special appearance, and objected to the service of summons upon him in the state of Colorado. His special appearance was overruled, and he then answered, admitting MacCall's allegations with reference to the judgment and the proceedings had prior to it, denied that MacCall had any defense to the original action, admitted the employment of Warrington & Stewart and of Green & Breckenridge to represent MacCall in that action, and denied the other allegations. He set up that there was no jurisdiction over him by reason of the service in Colorado, and his objections by special appearance to such service; alleged a regular trial and hearing with full knowledge on the part of Breckenridge & Green in the original action, and the publication of the original decree in the Douglas county papers, and full knowledge of it immediately after its rendition on the part of Green & Breckenridge; denied the fraud and perjury; alleged an application with notice to MacCall's attorneys for an order requiring MacCall to produce the books of the Meridan Canal Company, and hearing on such application on June 30, 1900, which was ignored by MacCall and his attorneys; that an order was entered, which had never been complied with, and that thereupon Looney had filed his evidence, as he was entitled to do, of what the books would set forth; that the facts set forth in the affidavit were sufficient to entitle him to his original decree, which found MacCall, as a delinquent stockholder, liable for Looney's judgment against the Meridan Canal Company. He also alleged that his original action against MacCall was instituted on May 5, 1897, and that after such date, and before the rendition of the decree in October, 1900, MacCall had transferred all his property, to the value of more than $50,000, for the purpose of defrauding his creditors, and purposely thereafter neglected the defense of Looney's action. A motion to strike this last allegation from the answer was overruled, and in June an amendment was filed to MacCall's petition setting out some correspondence between Warrington & Stewart and Green & Breckenridge, and expanding the allegations as to the mutual misunderstanding between Warrington & Stewart on behalf of MacCall and Green & Breckenridge with reference to the latter's employment. A general denial was filed to this amendment, and on July 1, 1902, trial was had before the same judge who entered the original decree against MacCall. He made a general finding on MacCall's petition in the latter's favor, and decreed that the judgment of October 6, 1900, should be vacated and annulled, and the original case of Looney v. MacCall reinstated and assigned for trial, and awarded to MacCall his costs in the present proceedings.

From this judgment Looney appeals, and urges, first, that MacCall had no remedy in equity, because his proper proceeding was under section 602 of the Code of Civil Procedure; second, that MacCall's petition does not show diligence in presenting his application to set aside the default judgment; third, that the allegations as to a misunderstanding among the attorneys are not sufficient to excuse his nonappearance; and fourth, that the evidence of such misunderstanding is not sufficient to show an equitable right to a new trial. Counsel for MacCall have apparently abandoned the claim of willful perjury and the claim of an agreement not to take up the case pending the presidential election. Appellant, Looney, and his counsel seem of the opinion that the proceedings allowed by section 602 must be considered exclusive in their nature, and that no original action in equity in the nature of a bill for a new trial will lie if section 602 gives a remedy. This is apparently for the reason that they regard the proceedings under section 602 as entirely of a legal character, and say that the rule preventing equitable relief where there is a complete remedy at law prevents that given by section 602 from being regarded as cumulative. Appellee MacCall, on the other hand, contends that the remedy provided in section 602, in so far as it trenches upon the domain originally held by courts of equity, is concurrent only, especially when it is set up in connection with other grounds of purely equitable relief. Secord v. Powers, 61 Neb. 616, 85 N. W. 846, is cited to the effect that: "The fourth subdivision of section 602 creates no new right. It is merely a declaration of the equity doctrine that a judgment clearly shown to be one obtained by fraud, and which it would be against conscience to enforce, will, on the application of the unsuccessful party and a showing of due diligence, be vacated and set aside." Meyers v. Smith, 59 Neb. 30, 80 N. W. 273, is cited to the proposition that the remedy under the provisions of section 602 is

Digitized by Google

but cumulative, and concurrent with an action in equity.

It would seem that, where a trial has been had upon the facts adduced, formal objections not presented to the trial court should be deemed waived. The appellant here went to trial in the court below upon issues of fact raised by MacCall's petition without objection. It would seem too late now for him to allege that the form of petition was improper, and it should have been entitled in the original action, and the whole matter set forth as a further and additional proceeding in the original case, instead of in the form of an independent application to the same court. The claim, therefore, that there was no cause of action here, because, under the facts alleged, section 602 gives a remedy by petition in the original action, cannot be sustained.

It is next claimed that, in any event, the allegations of the MacCall petition are insufficient to show that the rendition of the original decree was obtained without fault, laches, or negligence on his part. The objections to the petition are, first, that, so far as the allegations of an agreement that cases should not be tried until after the presidential election, there is no allegation when the term of court adjourned, nor that it did not last some months after the presidential election; that in fact it did so last, and no diligence was used by MacCall or his attorneys to protect his rights during all of that time. MacCall is not now insisting on that ground of defense.. He is ihsisting on the defense that he and his home attorneys were relying on the employment of Green & Breckenridge, and that the latter did not understand that they were so employed, and permitted a default judgment on an ex parte hearing.

It is claimed that the petition does not set forth when the October term was ended, and that, so far as the allegations go, there was nothing to show that the court trying the case did not still have jurisdiction to set aside the decree. It hardly seems probable that this objection is seriously made, and it was not urged at the argument. This court must take judicial notice that terms of court are required to be set annually, and it will not presume that the October term of Douglas county district court lasted until July following. Doubtless, a petition for relief in equity from a judgment should indicate that the court making the record had no longer jurisdiction to correct it. An allegation of the reasons for the nonappearance of the defendant during the term at which the action was originally tried is necessary. In this case the allegations relied upon are that Green & Breckenridge did not understand that they were so employed, and that Warrington & Stewart and MacCall himself had no knowledge that the case had been brought to trial until they learned it by the institution of a creditors' bill proceeding to enforce the judgment in May following.

The objections to the allegations that the judgment was obtained by perjury need not be considered, for such allegations are not now insisted upon by the appellee. It is conceded that the testimony was in substantial accordance with the allegations of Looney's petition, and, if there was no ground for excusing failure to meet them, the testimony should have been anticipated and met by the other party.

It is urged that the allegations of misapprehension as to the fact of their employment by Green & Breckenridge are insufficient, or, rather, it is urged that they are inconsistent and untrue. The real point urged here, as well as in the next complaint, that the evidence is insufficient, is that such a misunderstanding between client and attorneys as to the latter's employment, because of which the former relies upon the attorney, and the attorney fails to attend to the defense, furnishes no ground for relief. The cases cited on behalf of the appellee MacCall seem to distinctly support the doctrine that such a misunderstanding is available in a court of equity to set aside a judgment which has been rendered because of it, and where there is an equitable and complete defense. McKinley v. Tuttle, 34 Cal. 235; Panesi v. Boswell, 12 Helsk. 323; Searles v. Christenson, 5 S. D. 650, 60 N. W. 29. In Anthony v. Karbach (Neb.) 90 N. W. 243, it is held that a party who has been deceived by his attorney, and was prevented from presenting a defense, should have a decree vacated; and in Ennis v. Association (Iowa) 71 N. W. 426, where a party's attorney, without his knowledge, had suddenly absconded five days before the trial, and left the defendant's interest unrepresented, it was held that he should be entitled, on subsequently learning of the judgment, to have it set aside, and be permitted to defend. In Cleveland v. Hopkins (Wis.) 13 N. W. 225, where attorneys who had inadvertently and through a misunderstanding appeared for a party, and failed to equitably present his defense, and did so without his knowledge, he himself, on learning of the judgment, was allowed to have it set aside and permitted to defend. It seems clear that in this case the action taken by Warrington & Stewart and by Green & Breckenridge is explainable only on the supposition that they misunderstood each other; that MacCall and Warrington & Stewart supposed Messrs. Green & Breckenridge was employed in the case, and would look after it. There is nothing in the record directly contradicting their statements that such is the case, or directly to contradict MacCall's declaration that he knew nothing of this judgment until May. It is true that, in view of the correspondence, and of the extent to which Green & Breckenridge did act in the case, their permitting it finally to go to hearing with no attention seems surprising. It appears, however, that the letter to Warrington & Stewart, in which they indicated their

position, was not received. The allegations of a misunderstanding seem to us sufficient to warrant the trial court's action, and the evidence, too, indicates by a fair preponderance that these allegations are well founded.

It is recommended that the judgment of the district court be affirmed.

AMES and OLDHAM, CC., concur.

PER CURIAM. The conclusions reached by the Commissioners are approved, and, it appearing that the adoption of the recommendations made will result in a right decision of the cause, it is ordered that the judgment of the district court be affirmed.

CHESLEY v. ROCHEFORD & GOULD et al.

(Supreme Court of Nebraska. July 3, 1903.)

DIRECTING VERDICT—LICENSEE—DANGEROUS PREMISES.

1. In an action at law, where the right to recover depends upon testimony from which reasonable minds might draw different conclusions, the cause should be submitted to the jury. But, where only one conclusion can be drawn from the evidence, the court should direct a verdict.

2. Where one enters upon the premises of another with his consent, but without an invitation, and not in the discharge of any public or private duty, he is a bare licensee, and the occupier of the premises owes no duty to him, as long as no wanton or willful injury is inflicted upon him by the licensor or his servants.

3. Plaintiff's evidence examined, and *held* to show that he was at the time of the injury complained of a bare licensee on defendant's premises.

Commissioners' Opinion. Department No. 1. Error to District Court, Douglas County; Fawcett, Judge.

"Not to be officially reported."

Action by Sylvester Chesley against Rocheford & Gould and others. Judgment for defendants, and plaintiff brings error. Affirmed.

E. T. Farnsworth, for plaintiff in error. Frank H. Gaines, for defendants in error.

OLDHAM, C. The facts underlying this controversy are that in the summer of 1898 the Armour Packing Company was engaged in the construction of a large building in South Omaha, Neb. The firm of Rocheford & Gould, the defendants in this action, were independent contractors, who had charge of the brickwork on the piers of one of the structures called the "Oleo Building," and also were laying brick on the east wall of that building at the time of the injury complained of. From 8 to 16 feet east of the piers of the oleo building a gang of carpenters in the employ of Armour, and not of Rocheford & Gould, were engaged in flooring a reservoir about 10 feet deep, 50 feet wide and 250 feet in length. Among these carpenters was the plaintiff, Chesley, who had been in Armour's employ for some time previous, but commenced work on the reservoir the day he was injured. The floor of the elevator and the ground west of it on which defendants' men were working on the piers were practically on the same level, and 30 or 40 feet below the level of the street. For the purpose of getting brick down to their men working on the piers, defendants used a rough cable hoist or elevator on which a wheelbarrow of material would be lowered from the street to the ground near the pier where the brick was being laid. This elevator was double, so that while a wheelbarrow of brick was descending an empty wheelbarrow was ascending for another load. It was propelled by power, and was in use continuously during working hours. The framework around the elevator was stayed by cross-braces 8 to 10 feet apart. Wheelbarrows were placed in the elevator from the north and south sides, which were open and unprotected. The employés of Rocheford & Gould were supplied with water from a bucket which was placed in the shade of the elevator, and at the time of the injury complained of—the afternoon of July 23d—the bucket was on a rock some 6 or 8 feet north of the center of the hoist, and perhaps a little to the west. The carpenters who were at work on the reservoir were supplied with water by men or boys sent around among them for that purpose by Armour's foreman. The afternoon of the injury was very warm, and the water boys, as they were called, did not come around as frequently as desired among the carpenters to supply their thirst. Consequently, as appears from plaintiff's testimony, some of the carpenters went over to the bucket in the shade of the elevator to get water. It appears that he was flooring along on the southwest portion of the reservoir, and not very far distant from the elevator, immediately before the injury. He also claimed that the carpenters, while at work, would sometimes saw off ends of boards, which would fall 3 or 4 feet west from the floor of the reservoir, and that they would from time to time pick up these pieces of plank for the purpose of patching out the floor. There is also some evidence tending to show that they would sometimes lay their planes, squares, and other tools on the ground immediately west of the reservoir, and within a few feet thereof. At the trial of this case in the court below plaintiff testified that he stepped from the floor of the reservoir to pick up a piece of plank which had been sawed off, and that when he came near to the piece of plank he noticed the water bucket on the rock, and went there to get a drink, and that while he was drinking some heavy weight fell on his head, rendering him senseless, and inflicting a severe, if not a permanent, injury upon him. Other witnesses who saw the injury agree that plaintiff was standing with his back to the elevator

---

¶ 1. See Negligence, vol. 37, Cent. Dig. §§ 42, 43.

Digitized by Google

drinking, and that an empty wheelbarrow, which was ascending in the elevator, caught its handle on one of the cross-braces of the elevator, and was hurled down upon him.

There was evidence offered on the part of the defendants tending to show that plaintiff, immediately before the injury, was at work a considerable distance from the elevator, on the floor of the reservoir, and that he came by one of defendants' men on his way to the water bucket, and was remonstrated with for interfering with the brickmasons by going over their work to the water bucket. One of the defendants' brickmasons testified that plaintiff asked him for permission to go and get a drink from the bucket, and that he told plaintiff he might do so, but to look out for the elevator, and not to stand in front of it, as it was dangerous. Defendants also showed that on each of two former trials of this case in the court below that plaintiff testified in his own behalf, and made no claim that he went in search of boards or tools at the time of his injury, but that at each of the former hearings he alleged that he saw the water bucket on the stone, and went there because he was thirsty, and because the water boys did not come around as often as they should to supply the carpenters. Defendants' evidence also tended to show that there were no pieces of boards or tools of the carpenters anywhere near the elevator. This evidence, however, was disputed. The court, after the testimony was all in, directed a verdict for the defendants, and plaintiff brings the cause here on error.

As a verdict was directed for defendants in this case, we must examine the action of the trial court in the light of the evidence introduced by plaintiff, and dismiss from our consideration all questions on which there was a substantial conflict of testimony, because, if the right to a verdict on defendants' behalf depended on any question on which reasonable minds might differ, the cause should have been submitted to the jury, and a peremptory instruction for defendants should not have been given. We must examine this case, then, from plaintiff's theory, to determine what relation he occupied toward the defendants, and what duty, if any, defendants owed him. The elevator causing the injury was erected for the sole use and benefit of defendants' employés on private premises which defendants were rightfully occupying, and 20 or 30 feet below the level of the street, where no duty was imposed to provide generally against dangers to the traveling public, and in fact where the public had no right tc travel. The water bucket in front of the elevator was placed there for the sole use and benefit of defendants' men, and not for the use and benefit of the carpenters working on the reservoir. Plaintiff, at the time the injury occurred, was not in the ordinary discharge of his duty, even if, as he contended on the last hearing of the case, he started from his work with the id of picking up a piece of plank or some to which he was using, for he was not injur while doing this; nor could he have been jured, from his own evidence, if he h stepped where these pieces of plank and to were claimed to have been left. He sa the pieces of plank and tools were so three or four feet west of the floor of t reservoir, and that the hoist was about t feet west of the reservoir floor, and th when he went to look for the plank he sa the bucket, and went to it, stood over it, a was in the act of drinking, when he w hurt. Now, if he had stopped, in the line his duty, where he contends the boards a tools were, he would have been more th six feet west and several feet north of t place where the wheelbarrow fell, and, co sequently, would not have been injured. under his own testimony, he was injur while going on premises occupied by defen ants to get a drink from defendants' wat bucket. What, if any, duty did defendan owe to plaintiff under these surrounding In determining the duty owed by a licens to one who enters upon premises rightfu occupied by him, those entering have be divided by text-writers into three class First, a bare licensee or volunteer, who ters upon premises without any invitati either express or implied, and who does go in the line of any duty imposed upon hi second, those who go upon premises by t express or implied invitation of the oc pier; and, third, those who necessarily en on business with the licensor. As to t bare licensee, who goes as an uninvited gu to the premises, no duty is owed by the censor as long as no wanton or willful inju is inflicted by the act or misconduct of t licensor or his servants. But as to the t latter classes the licensor is bound to ex cise reasonable care to prevent damage fr unusual dangers. Woolwine's Adm'r v. Ra road Co. (W. Va.) 15 S. E. 81, 16 L. R. 271, 32 Am. St. Rep. 859; Sweeney v. Ra road Co., 10 Allen, 368, 87 Am. Dec. 6 Diebold v. Railroad Co., 50 N. J. Law, 4 14 Atl. 576.

No claim is made that any wanton or w ful injury was inflicted upon plaintiff eit by defendants or their employés. It is pl from the statement in this case that pla tiff was not upon defendants' premises in line of any duty devolving upon him at time the injury was received; consequen he was either there as a volunteer or by vitation. There is no claim of a direct vitation to come upon these premises. Th is there any evidence tending to show an plied invitation? We are aware of the that it has been held with reference to c dren of tender age that an invitation may implied to enter upon the premises by cing something particularly attractive n to and in plain view of places where they accustomed to congregate. But this rule

Digitized by Google

restricted to young children, and others not fully sui juris. Cooley on Torts, p. 303. Now, had the water bucket been placed near the hoist to supply both the carpenters and the masons with water this would clearly have been an invitation to all to go there, and it would have entailed upon the defendants the duty of exercising reasonable care to protect all from injury while there. So, likewise, if the employés had necessarily passed close to the elevator in going to and returning from their employment, it would have been the duty of defendants to have constructed their elevator in view of the safety of the parties who, in the line of their duty, necessarily passed near by it. But, as the water bucket was only kept for the use of defendants' men, and as the carpenters with whom plaintiff worked were otherwise supplied with water, and as plaintiff was neither going to nor returning from his place of business at the time of the injury, we are compelled to conclude that he was a bare licensee on the premises of defendants, and that his only right of action against the defendants would be for a wanton or intentional injury inflicted upon him by defendants or their employés. Gillis v. Railroad Co., 59 Pa. 129, 98 Am. Dec. 317. In this view of the matter, we think the trial court was justified in directing a verdict for the defendants, and we recommend that its judgment be affirmed.

AMES and HASTINGS, CC., concur.

PER CURIAM. The conclusions reached by the Commissioners are approved, and, it appearing that the adoption of the recommendations made will result in a right decision of the cause, it is ordered that the judgment of the district court be affirmed.

PEOPLE'S BUILDING, LOAN & SAVINGS ASS'N v. PARISH et al.

(Supreme Court of Nebraska. July 10, 1901.)

USURY—FOREIGN BUILDING ASSOCIATIONS—CONTRACT—CONSTRUCTION.

1. A foreign building and loan association is subject to the penalties of the statute against usury.
2. *Held*, that the loans were Nebraska contracts, and their construction and validity to be governed by the laws of this state.

Commissioners' Opinion. Department No. 3. Appeal from District Court, Fillmore County; Hastings, Judge.

"Not to be officially reported."

Action by the People's Building, Loan & Savings Association against William Parish and others. Judgment for defendants, and plaintiff appeals. Affirmed.

C. H. Sloan, for appellant. J. H. Stirling, for appellees.

AMES, C. This is an appeal from the judgment of the district court for Fillmore county in an action to foreclose a mortgage. The defense of usury was sustained by the judgment appealed from. It is conceded that the judgment is, in this respect, proper, provided the instruments sued upon are to be treated as Nebraska contracts, or as subject to the provisions of the statute of this state on the subject of usury. That they are so is established by a recent series of maturely considered decisions of this court. Loan Association v. Keeney, 57 Neb. 94, 77 N. W. 442; Loan Association v. Strine, 58 Neb. 133. 78 N. W. 377; Id., 59 Neb. 27, 80 N. W. 45; Loan Association v. Bilan, 59 Neb. 458, 81 N. W. 308. The instruments in suit were executed in this state, and the land mortgaged lies in this state. The plaintiff and appellant is a building association incorporated under the laws of the state of New York, and has its principal place of business in that state. The contract in suit stipulated for payment by way of premiums, dues, interest, penalties, etc., of a sum, for the use of the money borrowed, in excess of 10 per cent. per annum. The exact amount of this excess depends for its ascertainment upon a somewhat complicated mathematical calculation. One of the parties insists that the trial court computed it as a sum a few dollars too large, and the other that his computation is a trifle too low. The matter in dispute in this respect is not large, and, under the circumstances, it may properly enough be regarded as an issue of fact decided by the district judge upon conflicting evidence.

It is recommended that the judgment appealed from be affirmed.

ALBERT and DUFFIE, CC., concur.

Affirmed.

GUTHRIE v. STATE ex rel. GIBSON.

(Supreme Court of Nebraska. Nov. 20, 1901.)

BASTARDY—EVIDENCE—EXCEPTIONS—NECESSITY.

1. Evidence examined, and *held* sufficient to sustain a verdict of guilty on a charge of bastardy.
2. An alleged abuse of discretion on the part of the trial court is unavailing unless excepted to.

Commissioners' Opinion. Department No. 3. Error to District Court, Fillmore County; Hastings, Judge.

"Not to be officially reported."

Proceedings by the state, on the relation of Ida Gibson, against George Guthrie. Judgment for plaintiff, and defendant brings error. Affirmed.

J. H. Stirling and Kelley & Browne, for plaintiff in error. John Barsby and Frank W. Sloan, for defendant in error.

ALBERT, C. On a trial to a jury, on a complaint charging him with being the

Digitized by Google

father of a bastard child, George Guthrie was found guilty. From a judgment rendered against him on such finding, he prosecutes error to this court.

It is first urged that the verdict is not sustained by sufficient evidence. We have examined the evidence with care. It would serve no useful purpose to review it. The trial resolved itself largely into a question of veracity between the complainant and the defendant. The jury decided in favor of the complainant. We are not prepared to say that their decision on that point was unwarranted. It appears that the complainant had sexual intercourse with one other than the defendant, on the night following her alleged intercourse with the defendant. It is urged that it is impossible to say which of her companions in vice is the father of the child. But it also appears that this third party took certain precautions to prevent conception, which were fully explained to the jury. From the evidence, we think the jury were warranted in finding that such precautions were effective.

It is urged that there was an abuse of discretion on the part of the court in permitting the plaintiff to reopen his case and offer further evidence after both sides had rested. One sufficient answer to this is that no objection was made to the request in that behalf, nor to the ruling of the court thereon, so it is unavailable at this time, for that reason, if no other.

It is recommended that the judgment of the district court be affirmed.

AMES and DUFFIE, CC., concur.

Affirmed.

HEFFERNAN v. O'NEILL.

(Supreme Court of Nebraska. June 19, 1901.)

OPINION EVIDENCE—HANDWRITING—APPEAL—CONFLICTING EVIDENCE.

1. Where a witness swears that he has made a special study of and has been an instructor in penmanship for 25 years, and has given special attention to the comparison of signatures, such evidence is sufficient to qualify him to testify as an expert on handwriting.

2. Where the evidence is conflicting, the verdict of a jury will not be disturbed unless it is clearly against the weight of the evidence.

3. Conduct of the trial judge examined, and *held* proper.

Commissioners' Opinion. Department No. 2. Error to District Court, Dakota County; Evans, Judge.

"Not to be officially reported."

Action by Michael Heffernan against James O'Neill. Judgment for defendant, and plaintiff brings error. Affirmed.

M. C. Jay and Sullivan & McMaster, for plaintiff in error. John Brennan and W. P. Warner, for defendant in error.

OLDHAM, C. Plaintiff sued defendant on a promissory note. Defendant answered, denying the execution of the note, and denying any consideration. Trial was had to a jury, and defendant had judgment, and plaintiff brings error.

No complaint is made of the instructions of the court in plaintiff's brief. The first alleged error called to our attention is as to the action of the trial court in permitting defendant's counsel, on cross-examination of the plaintiff, to ask the plaintiff if he did not buy corn in the month of November, 1894, and gave his note, due in one year, in payment. We don't think there was any error in this ruling, because defendant's theory of the case was that plaintiff did not have $1,000, or any considerable sum, at the time he claimed the note was given him, which was on January 9, 1895; and the plaintiff, in trying to explain how he came to have this amount of money, said he had collected it on accounts for about three months before the note was given, and kept it at home in his trunk. This, we think, made it a pertinent inquiry as to why he should give his note for $100 worth of corn purchased by him, when, as he claimed, he had so much money in his trunk at home.

Complaint is also made of the action of the trial judge in saying to plaintiff's witness Mitchell, "He may answer; he is evading the question." We see nothing prejudicial in this remark of the trial judge, for an examination of the testimony of Witness Mitchell shows that he was plainly evading an answer that was responsive to a very pertinent question propounded to him by defendant's attorney. This remark of the trial judge was drawn out by the contention of plaintiff's attorney that the witness had answered the question fairly, when he had not, and there was nothing in the language used by the trial judge that indicated any bias or prejudice, or any disposition to improperly influence the jury or to cast any aspersion on the plaintiff's witness.

Complaint is also made of the action of the trial judge for reproving plaintiff's attorney for making an unwarranted attack on one of defendant's witnesses. We think the trial judge deserves commendation, and not criticism, for this. Where a witness is on the stand and is wantonly attacked without any provocation whatever by counsel in the case, it is the duty of the trial judge to protect him from all unprofessional attacks of opposing counsel.

The next contention of counsel for plaintiff is that the court erred in permitting defendant's witness Haupt to testify as an expert on signature to the note in suit. The witness testified that he had been a student of penmanship for about 30 years; that he had given special attention to the study and comparison of signatures; he had attended a business college and had taught penmanship during all these years; that he was familiar with all the different systems of penmanship; and that he had been frequently

Digitized by Google

called upon to compare signatures for the purpose of determining whether they were genuine or not. We think this was a sufficient foundation to permit him to give his opinion as to the genuineness of this signature. Ort v. Fowler, 31 Kan. 478, 2 Pac. 580, 47 Am. Rep. 501; Vinton v. Peck, 14 Mich. 287; Yates v. Yates, 76 N. C. 142; Eisfield v. Dill, 71 Iowa, 442, 32 N. W. 420.

The contention is also made that the verdict is not supported by sufficient evidence. A careful examination of the bill of exceptions shows that one or the other of the parties to this suit was certainly guilty of most shameful and wanton perjury in the testimony which they gave in this cause. But the jury before whom both testified were better able to determine which one was worthy of credence than we are. Under the rule that the verdict of a jury will not be disturbed, when the evidence is conflicting, unless it is clearly against the weight of the evidence, the verdict as found must stand.

It is therefore recommended that the judgment of the lower court be affirmed.

POUND and SEDGWICK, CC., concur

Affirmed.

HASLAM v. BARGE.

(Supreme Court of Nebraska. July 3, 1903.)

VERDICT—INSTRUCTIONS—BREACH OF MARRIAGE PROMISE—STATUTE OF FRAUDS—APPEAL—ESTOPPEL.

1. A verdict rendered in plain disregard of the instructions is contrary to law, and will ordinarily be set aside without an examination of the instructions, to determine whether correct or not.

2. Evidence examined, and *held* not to establish a written contract of marriage.

3. An unwritten contract, which by its terms is not to be performed within a year from the making thereof, is not taken out of the statute by an oral acknowledgment made within a year from date of performance.

4. Where the record discloses that the defendant has raised the question and insisted in the district court that there was not sufficient evidence to warrant the submission of a material issue to the jury, and the court nevertheless insists on submitting the issue, the defendant is not estopped on appeal to raise the same question here because he requested and obtained an instruction defining the law relating to the issue as he understands it to be.

(Syllabus by the Court.)

Commissioners' Opinion. Department No. 3. Error to District Court, Dodge County; Grimison, Judge.

Action by Marie Barge against George Haslam. Judgment for plaintiff, and defendant brings error. Reversed.

J. E. Frick and F. Dolezol, for plaintiff in error. T. M. Franse and Anderson & Keefe, for defendant in error.

DUFFIE, C. On the trial of this case a verdict was returned in favor of the plaintiff below for $750. The defendant immediately filed a motion asking the court to reserve the case for further argument and to reserve judgment. This motion was granted by the court. After this motion was filed, and pending a hearing thereon, defendant below filed a motion for a new trial. Upon the argument of the motion to reserve the case and for judgment notwithstanding the verdict, the court entered judgment for the defendant below. From this judgment plaintiff below prosecuted error, and this court reversed the court below and remanded the case for action upon the motion for a new trial, which still remained undisposed of. 88 N. W. 516. Opinion on rehearing, 91 N. W. 528. On October 10, 1902, the motion for a new trial came on for hearing in the district court in pursuance of the mandate from this court, and upon consideration thereof the court overruled said motion, and judgment was entered on the verdict of the jury. Thereupon the defendant settled and had allowed his bill of exceptions, and has brought the case to this court on error. Judge Marshall, who presided at the trial, and in all the proceedings up to the argument on the motion for a new trial, having deceased, the motion for a new trial was heard and passed on by another judge.

The principal errors relied on are that the court erred in overruling the motion for a new trial, and that the verdict is not sustained by the evidence and is contrary to law. The only question decided on the former appeal was the sufficiency of the plaintiff's petition to state a cause of action, while this appeal involves the merits of the controversy between the parties. The eighth and ninth instructions of the court are as follows—

"(8) The jury are instructed that the contract or promise of marriage set out in the plaintiff's petition, to the effect that on or about the 1st day of July, 1890, the defendant orally (that is, not in writing) promised to marry the plaintiff, and the plaintiff orally (that is, not in writing) promised to marry the defendant, when the plaintiff should arrive at the age of 18 years, and from the undisputed evidence the plaintiff was at the time only a little over the age of 15 years; leaving nearly 3 years to intervene between the time of making the contract or promise and the time when, by its terms, it was to be performed. This contract or promise, under our statute of frauds, was and is void, or voidable at the instance of either of the parties thereto, and cannot be enforced in this action, for the reason, as required by that statute, this contract or promise was not in writing, nor was any memorandum thereof made or signed by either of the said parties at the time it was made.

"(9) The jury are instructed that, although the contract of marriage, as set out in the preceding eighth instruction, is void and of no force, it would remain void and of no force and effect against the defendant, or in

favor of the plaintiff, unless the defendant afterward, and before the 24th day of May, 1893, signed a memorandum of said contract, which memorandum should be as broad and full as the original contract or promise; and the memorandum, to be good, should embrace all the terms and conditions of said original contract. Under the pleadings in this case, a new contract of marriage will not suffice, for such new contract is not the cause of action set out in the plaintiff's petition, and cannot in this case be made the ground of recovery in favor of the plaintiff. The plaintiff must recover, if she is entitled to recover at all, upon the cause of action set out in her petition, and cannot recover upon a new or different contract or cause of action."

In these instructions the jury are plainly and explicitly told (1) that the oral contract of marriage, nearly three years intervening between the making of the contract and the time when by its terms it was to be performed, was, under our statute, void; (2) that, being void, it would remain so, unless the defendant before the 24th of May, 1893, signed a memorandum of said contract as broad and full in its terms as the original; (3) that under the pleadings no new contract could be made the ground of a recovery, as such new contract is not the cause of action set out in the petition. Whether an oral contract of marriage, which by its terms is not to be consummated for more than a year after the making thereof, falls within our statute, is not necessary to be determined in this case. That it was void was the opinion of the district court, and he so instructed the jury. For the purposes of the trial, this was the law of the case, and the jury should have been governed by these instructions, whether the law was properly stated or not. In Boyesen v. Heidelbrecht, 56 Neb. 570, 76 N. W. 1089, it is said: "Under the evidence and the instructions of the court, which forcibly, and perhaps too strongly, stated the privileges of an innocent purchaser before maturity of negotiable paper, the plaintiff was entitled to a verdict. The verdict was rendered in plain disregard of these instructions. A verdict so rendered is contrary to law, whether the instructions be correct or not. Aultman v. Reams, 9 Neb. 487, 4 N. W. 81; Omaha & R. V. R. Co. v. Hall, 33 Neb. 229, 50 N. W. 10; Standiford v. Green, 54 Neb. 10, 74 N. W. 263. While a judgment will not be reversed for that reason if the verdict be the only one which could properly be rendered, this case does not fall within the exception."

Accepting, as we must, the instructions of the court as the law of the case for the purpose of determining whether the verdict was contrary to law, an examination of the record makes it plain that these instructions were wholly disregarded. The cause of action stated in the petition is as follows: That on or about the 1st day of July, 1891, the plaintiff, being then unmarried, at the request of the defendant then promised the defendant to marry him, and the defendant at the same time promised to marry her; that said contract and promise of marriage was between the said parties, in the first instance, oral and spoken, and said contract of marriage was to be fulfilled upon the plaintiff's arriving at the age of 18 years or over; that, after said original and mutual agreement of marriage between said parties was made, said defendant at many and numerous times, both orally and in writing, by letters between July 1, 1891, the date of first promise of marriage, and November 25, 1893, renewed and acknowledged said first contract and mutual promise of marriage; that plaintiff relied on said promise and remained unmarried; that defendant, contrary to said promise, on the 25th day of November, 1893, married another; and that plaintiff was at all times ready and willing to marry said defendant. The answer, among other things, alleged that the promise of marriage was oral, and was made about the 1st of July, 1890; that it was not to be consummated until plaintiff attained the age of 18 years; that at the time the promise was made she was 15 years of age; that no note or memorandum of said promise was ever made in writing, subscribed by the party charged, and said oral promise was, by its terms, not to be performed within 1 year from the making thereof. The reply admitted that the marriage was not to take place until the plaintiff below had attained the age of 18 years, and in her testimony given on the trial she stated that the defendant proposed marriage to her in May, 1890, and that she gave him her answer in August, shortly after attaining her fifteenth birthday. The only evidence of any written memorandum of the marriage contract existing between the parties was given by the plaintiff and her mother. The plaintiff testified that shortly after the defendant's marriage she burned all the letters received from him. She was allowed to testify as to the contents of one letter received in April, 1893. On being asked the contents of that letter, she replied: "He wrote he would be up in a few days and make arrangements about our marriage. Q. Anything further? A. Only that he would be up in a few days." Her mother testified that she had read the letter, and, on being asked to state its contents, replied: "Well, he told her that the time would soon arrive when she would be of age, and that he would come up in a few days and make arrangements with her about their marriage. Q. Anything further? A. I do not remember." This is absolutely all the evidence tending in any manner to show any written contract of marriage made between the parties, and it seems incredible that a jury, under the instructions above quoted, could find that a written contract, or any note or memorandum thereof, was made. There is nothing in this evidence containing an offer of mar-

riage or a promise to marry. It does refer to their marriage, and we may reasonably presume that some negotiations relating to a marriage had taken place between the parties prior to the date of the letter; but what it was, and whether existing in the form of a contract of marriage, all of the terms and conditions of which had been agreed on, is not suggested, and is not for the court or the jury to assume. If, as charged by the court, the contract, to be valid, must be in writing, that is one of the matters to be established by the evidence, and no presumption to that effect can be indulged in. That there is an absolute failure in the evidence to establish any written contract of marriage is beyond question or controversy, and, unless the law allows an oral acknowledgment made less than one year from the time of performance to validate and confirm an oral agreement not to be performed within the year, then there is no evidence whatever to support the verdict.

The former opinions of this court, holding that the petition stated a cause of action, were based, undoubtedly, upon the allegation therein contained that the original oral contract of marriage had been subsequently acknowledged and renewed in writing, for the law seems to be well established that proof of the oral acknowledgment of an unwritten contract within the year would not take an oral contract, not to be performed for more than a year after the making, out of the statute. Blanton v. Knox, 3 Mo. 342; Odell v. Webendorfer (Sup.) 64 N. Y. Supp. 451. In the latter case it is said: "Where an oral contract of employment for a year from the following 1st day of April was made in March, the contract was not exempted from the operation of the statute of frauds and validated by the restating of the terms of the contract between the parties on the 1st day of April."

One other question requires consideration. At the request of the defendant below, certain special findings were submitted to the jury. These findings are as follows: "(1) Was there a promise of marriage made between the plaintiff and defendant, other than the one testified to by the plaintiff as having been made about the 1st of August, 1890? A. Yes. (2) If you answer the preceding question 'Yes,' then state at what other time said promise of marriage was made? A. On the 13th or 14th, or within two weeks prior to the 13th or 14th, day of April, 1893. (3) If you find that there was such a promise, as stated in the second question above, then state whether such promise was made orally or spoken, or whether it was in writing? A. Oral and written. (4) Did the defendant write a letter to the plaintiff on or about the 13th or 14th of April, 1893, or at any time within two weeks prior thereto, in which he wrote the statements testified to by the plaintiff and her mother? A. Yes." It is insisted by the defendant in error that, these special findings being submitted at the request of the defendant below, he cannot now be heard to say that there was no evidence to sustain the findings; and American Fire Ins. Co. v. Landfare, 56 Neb. 482, 76 N. W. 1068, Farmer Bank v. Garrow (Neb.) 88 N. W. 131, and Mo. Pac. Ry. Co. v. Hemingway, Id. 673, are cited in support of this contention. In the case first cited it is said: "One who tenders an instruction, which is given, which assumes the existence of evidence to establish an issuable fact in a case, cannot afterward be heard to assert that there was no evidence received tending to prove such fact." The other cases follow and approve this rule, and we think that, properly applied, it is founded in good sense, and that it should be enforced. Where a party, on his own motion, secures action from the court, he ought not afterwards to be heard to complain that such action was erroneous. He cannot predicate error on what he himself has asked and secured. If we should admit that a party who asks for the submission of special findings occupies the same position as one who makes a request for an instruction defining the law applicable to an issue in the case—and this we do not by any means concede—we still think that the cases above referred to do not go to the extent claimed by the defendant in error. A careful examination of the opinions in the cases referred to will show that the complaining party made no claim in the district court that there was no evidence on which to base the instructions or to submit the issue to the jury. At least, they fail to disclose that such complaint was made. In the case at bar the record discloses that Haslam, the plaintiff in error, urged and insisted that there was no evidence whatever upon which to submit the questions at issue in this case to the jury. An instruction to direct a verdict because the plaintiff had not made a case by her evidence was submitted and argued, and the plain question presented for our determination is this: Must a defendant in the action, between whom and the court there is a difference of opinion upon the question of whether there is evidence upon which a certain issue ought to be submitted to the jury—the court thinking there is evidence, and the defendant believing there is none—sit by, knowing that the court is going to submit the issue under what he believes to be an erroneous instruction, and remain silent, or may he ask the court to amend the instruction, or give one which he himself has prepared, and which embodies the law as he understands it? If the rule stated in the cases above cited is to be followed in all cases and under all circumstances, then the defendant who has fairly presented his claim to the court, and who has moved for a dismissal upon the ground that there is no evidence upon which to base a verdict against him, after fairly calling the attention of the court to his position, so that no one can mis

Digitized by Google

understand his theory or be misled by his action, must sit by in silence, and see the case submitted to the jury under what he believes to be erroneous instructions, in order to obtain a hearing in this court. Under such circumstances, we do not believe that he should be estopped here from insisting, as he did in the court below, that there is no evidence upon which to submit the issue to the jury, even though he takes an active part in preparing and tendering instructions which the court finally includes in its charge to the jury. The district court was not misled by the action of the plaintiff in error in asking a submission of these special findings. The court knew that he was insisting that there was not sufficient evidence to warrant a verdict against him, and, under these circumstances, we do not think that a party should be estopped in this court from questioning the sufficiency of the evidence to sustain a finding by the jury by doing all in his power to secure from the court, which insists in submitting the question, what he regards as proper instructions upon the issue. To do less than this would be unfair to the court, and a neglect of duty as an attorney. We hold, therefore, that where the record discloses that the defendant in an action has squarely raised the question of the sufficiency of the evidence to warrant a verdict against him, or an adverse finding on some material issue in the case, and the district court, against his objection, insists on submitting the question to the jury, he does not waive his right on appeal to this court to raise the question of the sufficiency of the evidence to support the findings of which he complains, by asking instructions covering his theory of the laws applicable to the case.

For the reason that there is not sufficient evidence in the record to support the verdict of the jury, the judgment should be reversed, and we so recommend.

ALBERT, C., concurs.

PER CURIAM. For the reasons stated in the foregoing opinion, the judgment of the district court is reversed.

TREPHAGEN et al. v. CITY OF SOUTH OMAHA.

(Supreme Court of Nebraska. July 8, 1903.)

CORPORATIONS — AUTHORITY OF GENERAL MANAGER—DIRECTORS—MUNICIPAL CORPORATIONS—SPECIAL ASSESSMENTS.

1. The authority of a general manager to conduct the ordinary business of a corporation organized for the purpose of yarding, feeding, and taking care of cattle, hogs, sheep, and horses consigned for sale to a certain market, is not broad enough to authorize him to sign a petition for paving a city street, and thus charge the real estate of the corporation abutting thereon with the cost of such improvement.

2. The act of signing the name of the corporation to such a petition is one which falls within the managing powers of the board of directors, who are, by law and by its articles of incorporation, made its managing agents.

3. The authority to perform such an act must come from the board of directors, and the burden is upon the city, which seeks to enforce a special tax against specific lots to pay for such improvement, to show that the general manager was duly authorized by the corporation to sign such petition for and on its behalf.

4. Under the statutes in force in the year 1898, no special tax could be assessed upon and made a charge against specific real estate in a city of the first class to pay for the construction of a wooden sidewalk without the adoption of a resolution fixing the cost of such construction as a special assessment thereon, at a meeting of the city council of which at least 10 days' notice had been given before holding the same, or personal service of notice thereof on the persons owning or occupying the property to be assessed.

5. At that time cities of the first class had no power to levy a special tax on specific lots for the purpose of paying the cost of removing garbage therefrom.

(Syllabus by the Court.)

Commissioners' Opinion. Department No. 2. Appeal from District Court, Douglas County; Dickinson, Judge.

Action by Georgia A. Trephagen and others against the city of South Omaha. Judgment for plaintiffs, and defendant appeals. Affirmed.

A. H. Murdock, for appellant. H. W. Pennock, for appellees.

BARNES, C. Georgia A. Trephagen, H. L. Wilton, Mike Higgins, and Kornelia Adamowicz (appellees) commenced this action in the district court of Douglas county to restrain the treasurer of the city of South Omaha from collecting certain special taxes or assessments levied against and upon certain lots belonging to them situated in said city, to cancel the said special taxes and remove the cloud created by the assessment and levy thereof on their title to said lots. The petition alleged, in substance, that the city had pretended to assess certain special taxes against their specific property for paving, curbing, and guttering that part of L street from the west end of the viaduct to the west line of Thirty-Third street, situated in Paving District No. 6 of said city; that prior to the attempted passage and approval of the ordinance ordering said paving there had never been filed with the clerk of said city, or presented to the city council, a petition signed by the property owners representing a majority of the front feet or area within the limits of said paving district, as defined in said ordinance; that a paper called a petition was filed with the said clerk, requesting that the street be paved with Colorado sandstone on six inches of sand; that the said paper was not a petition, but was a mere selection of materials, and was not signed by the owners of a majority of either the front feet or area of the real estate within said district; that there appears upon said

Digitized by Google

paper the name of Joseph Schlitz Brewing Company, Ed. Ainscow, and R. D. Mattice, but neither of said parties owned any real estate within said district at the date thereof, nor at the time defendant passed the ordinance ordering the said street to be paved; that there also appears upon said paper the name of the Union Stockyards Company, by W. N. Babcock, G. M., and it was alleged in the petition that said Babcock had no authority to sign the name of the Union Stockyards Company, and the same was placed upon said paper without the authority of the said corporation, and should not be considered as a lawful signature; that no other paper purporting to be signed by property owners in said district was ever filed with the clerk or with the city council in connection with the paving or curbing of said street, and no other proceedings were had than those mentioned in the petition in connection with the paving of said street and the assessment of the cost thereof on the adjacent and abutting property; that the city council failed to sit as a board of equalization, and failed to assess benefits to the property of the plaintiffs, and failed to make any finding of any character respecting said assessment, and failed to give notice of said proposed equalization by publication for six days prior to said 7th day of January, 1892, in any daily paper of said city; that by the terms of a certain special ordinance, No. 32, large amounts of special taxes were levied upon the real estate of the appellees to pay the costs of said paving and curbing, and the said ordinance was duly certified by the city clerk to the city treasurer, and was by him entered upon the tax lists, and became and is an apparent charge and lien upon the plaintiffs' real estate, but the said assessments were null and void for the reasons above set forth. For their second cause of action appellees alleged that the city attempted to pass a special ordinance, numbered 134, by the terms of which lot 7, block 357, was charged and assessed with the sum of $35.53 for the costs of the construction of an alleged sidewalk in front of said property; that prior to the passage of said ordinance no notice had been given to the owners of said property, and no notice had been published of said proposed assessment; that the owners had never been required to construct the sidewalk or notified that a sidewalk had been ordered, and had never been given any opportunity to construct the same, and that all of the proceedings of said city council with reference thereto were null and void. For their third cause of action the appellees alleged that the city attempted to pass, and thereafter there was approved by the mayor of said city, a special ordinance, No. 87, by the terms of which lot 7, block 357, was charged and assessed with the sum of $19.64 as an alleged garbage assessment for removing garbage from said property; that said property was not subject to an assessment for removing garbage; that there was and is no authority of law for assessing specific real estate in said city for the removal of garbage; that there was and is no authority of law for assessing specific real estate in said city for the removal of garbage; and all of the acts of the city council in attempting to levy and in levying an assessment therefor were and are null and void. The petition concluded with a suitable prayer for relief. The appellant, by its answer, denied each and every allegation contained in the petition, except those expressly admitted, set up a plea of the statute of limitations, and for a third defense contained matters supposed to create an equitable estoppel. The reply was a general denial. The cause was duly tried, and the court found generally in favor of the appellees, and rendered a decree canceling the alleged special taxes, restraining the collection thereof, and removing the apparent cloud from the title to the lots described in the petition. From this decree the city appealed, and now contends that the court erred in its findings and judgment as to each of the several causes of action set forth in the petition, and that the evidence is not sufficient to sustain the decree.

The rule is that, in order to confer jurisdiction upon a city council to order paving and curbing, and authorize the assessment of the cost thereof against the abutting real estate, a petition therefor must be presented, signed by the owners of a majority of the feet frontage upon the street to be thus improved; and this rule is so well settled in this state that it is unnecessary to cite authorities in support of it. In fact, the appellant concedes this to be the rule. It may be further said that the burden is on the city seeking to enforce such a tax to show that all the proceedings made essential by the statute, which is the city charter, leading up to the special assessment, have been strictly followed; that there is no presumption coming to the aid of the city which seeks to enforce the lien of a special tax. Merrill v. Shields, 57 Neb. 78, 77 N. W. 368; Smith v. City of South Omaha, 49 Neb. 883, 69 N. W. 402. It is a recognized rule of construction, especially applicable to actions of this character, that those things which the law regards as the substance of the proceeding cannot be treated by the courts as immaterial; that the record must show affirmatively a compliance with all the conditions essential to a valid exercise of the taxing power, and that their omission will not be supplied by presumption. It therefore devolved upon the appellant in this case to show that the special taxes complained of were legally levied.

It was stipulated by the parties on the trial in the court below that the property owned by the Union Stockyards Company constituted a majority of the feet frontage abutting on the street paved; consequently the validity of the petition turns upon the pur-

Digitized by Google

ported signature of that corporation thereto. Evidence was introduced by the appellant which showed that the Union Stockyards Company was a corporation organized for the purpose of conducting a general stockyards business; that the business of said corporation was the yarding, feeding, and taking care of cattle, hogs, sheep, and horses that were consigned for sale to the South Omaha market. It was further made to appear that W. N. Babcock, who signed the name of the company to the paper or petition in question, was at that time its general manager. The appellant, recognizing the fact that it devolved upon it to prove that Babcock had authority to sign the petition, introduced in evidence certain parts of the articles of incorporation under which the Union Stockyards Company was organized, which we quote, as follows:

"The affairs of this corporation shall be conducted by a board of directors of seven members, each of whom shall hold office for one year, and until his successor is elected and takes his seat at the board; they shall elect a president, vice president, secretary and treasurer; they shall also appoint such superintendents, managers and agents as from time to time shall be deemed necessary for the transaction of the business of this corporation.

"The board of directors, at their regular meeting after each annual election, shall elect by ballot a president, vice president, and may also elect a secretary and treasurer, and may continue the then incumbent in office by resolution.

"The board of directors shall have the whole charge and management of the property and effects of the company, and they may delegate the power to the executive committee to do any and all acts which the board is authorized to do, except such acts as by law, or by these by-laws must be done by the board itself.

"The board shall have the power, in the absence of the president and vice president, to appoint a chairman pro tempore, and during the prolonged absence of the president or other officers to appoint substitutes pro tempore.

The board of directors shall prescribe the duties and powers of the secretary and treasurer, and all subordinate officers and agents, and shall make all needful rules and regulations not inconsistent with the articles of incorporation for the transfer of stock of the company, the issuing of certificates of stock, keeping the records and accounts of the company, the management and disposition in particular of the stock, property, estate and effects of the company, and shall have power to delegate authority to do and perform specific acts not inconsistent with the articles of incorporation to special committees to be appointed by the board or presiding officer at the option of the board."

It cannot be said that these provisions authorized Babcock, as general manager of the corporation, to sign the paper or petition in question. No evidence was introduced to show, or which tended to show, that the board of directors had ever authorized him to do so. We cannot presume that Babcock had power to sign the petition, and thereby bind the corporation. It is true that a corporation can act only by its agents, and the presumption is that an act pertaining to its ordinary business, when performed by its president, secretary, or general manager, is legally done, and is binding upon the corporation, yet no such presumption prevails when the act done by such officers does not fall within the scope of the powers conferred upon and usually exercised by them as part of the ordinary business of the corporation. The act of signing the name of a corporation to a petition for the opening of a highway over its real property, or the paving of a street abutting thereon, whereby a special tax will be assessed and become a charge against the property of the corporation, is one which falls within the managing powers of the board of directors, who are by law and by the articles of incorporation in this case made the managing agents of the corporation; and authority to perform such an act must come from them. The appellant having failed to introduce any evidence tending to show that Babcock was authorized to sign the paper in question by the board of directors of the stock yards company, it follows that the petition or paper was void, and conferred no authority upon the city council to pave the street and assess the cost thereof against the abutting real estate. Morse v. City of Omaha (Neb.) 93 N. W. 734; Mulligan v. Smith, 59 Cal. 206.

On the question of the equalization of the assessment for paving and curbing, it appears from the records of the city council, which are in evidence, that Friday, January 7, 1892, was the time fixed for that purpose. No meeting was held on that day, but it appears that at a meeting held on January 11th following it was moved that the council sit as a board of equalization on January 22 and 23, 1892, and the motion was carried. It further appears that at the meeting of January 22d a recess was immediately taken until January 23d at 4 o'clock p. m., and the city clerk was instructed to receive all complaints in writing; that on the 23d the meeting was called to order, and on a motion made by one of the councilmen an adjournment was taken to January 25, 1892; that the adjourned meeting, so far as the record shows, was never held; and therefore the court was right in its finding that no equalization of this paving assessment had ever been made, and that the city council never held a proper meeting for that purpose. We therefore conclude that the finding and judgment of the trial court as to the paving, curbing, and guttering tax must be affirmed.

As to the sidewalk assessment, it appears that no legal notice of the meeting of the

Digitized by Google

board of equalization to make such assessment was ever given or published. The affidavit made by the publisher of the Daily Tribune, the newspaper in which publication was attempted, showed that the notice of the proposed meeting for that purpose was published from October 13th to October 19, 1898, and it appears that no other notice was ever published or given to the appellees. The statute in force at that time relating to the construction of wooden sidewalks required that the assessment to pay the cost thereof should be made by the city council, at any meeting, by a resolution fixing the cost of the construction or repairs of such work along the lot adjacent thereto as a special assessment thereon, and the amount charged against the same, which, with the vote thereon by yeas and nays, was required to be spread at large upon the minutes. It was provided that notice of the time of holding such meeting and the purpose for which it was to be held should be published in some newspaper published and of general circulation in the city at least ten days before holding the same, or, in lieu thereof, personal service might have been made on the persons owning or occupying the property to be assessed. The appellant failed to show that personal service was ever made on the appellees, and, it appearing that the notice in question was published only six days instead of ten, it follows that there was no such substantial compliance with the statute as would authorize the city to levy the special tax for the construction of the sidewalk complained of, and make it a specific charge on the abutting real estate.

It further appears that by special ordinance No. 87 the appellant levied a special tax amounting to $11.10 on lot 7, block 357, South Omaha, for the purpose of paying for the cost of removing garbage therefrom. The petition charges that there was no authority of law for this special assessment. The trial court found for the plaintiffs, and declared this tax void. We have been unable to find any statute under which the city of South Omaha at that time might have levied such an assessment. It is one of the elementary principles of taxation that the power to tax lies exclusively in the Legislature. Without a special legislative enactment no city or other municipal subdivision has any right to levy a tax or assessment upon the property of its citizens. Cooley on Taxation (2d Ed.) pp. 62–142. The statute not having conferred authority on the city authorizing it to assess and levy a special garbage tax and make it a specific charge on the lot in question, we conclude that such tax was void.

The foregoing questions being the only ones argued by counsel for the appellant in his brief, no others will be considered. A careful review of the record convinces us that the findings and judgment of the trial court are amply sustained by the evidence, and accord with well-established principles of law. We therefore recommend that the judgment appealed from be affirmed.

ALBERT and GLANVILLE, CC., concur.

PER CURIAM. For the reasons given in the foregoing opinion, the judgment of the district court is affirmed.

LINTON v. BAKER.

(Supreme Court of Nebraska. Nov. 20, 1901.)

RECORD—AUTHENTICATION—ACTION—REAL PARTY IN INTEREST—DIRECTING VERDICT.

1. The authentication of a record of the Queen's Bench Division of the High Court of Justice of England examined, and *held* to conform to the requirements of section 416, Ann. Code 1901.

2. Under the provisions of section 29, Ann. Code 1901, every action must be prosecuted in the name of the real party in interest, and the owner of a judgment upon which suit is brought, although having no formal assignment of such judgment, is the real party in interest.

3. When, in a case tried to a jury, there is no conflict in the evidence, and reasonable men can draw but one conclusion from the facts and circumstances proved, it is proper for the court to direct the verdict. C., B. & Q. R. Co. v. Barnard, 49 N. W. 362, 32 Neb. 306.

Commissioners' Opinion. Department No. 1. Error to District Court, Douglas County; Sedgwick, Judge.

"Not to be officially reported."

Action by Charles C. Baker against Phoebe R. E. E. Linton. Judgment for plaintiff, and defendant brings error. Affirmed.

John T. Cothers and W. A. Redick, for plaintiff in error. Charles A. Goss and J. H. McIntosh, for defendant in error.

KIRKPATRICK, C. This is an action brought in the district court of Douglas county on October 11, 1894, by defendant in error against plaintiff in error to recover the sum of $1,473.55, claimed to be due as costs in an action had in one of the courts of England. The petition sets up that plaintiff in error brought an action in the Queen's Bench Division of the High Court of Justice, in England, in the kingdom of Great Britain and Ireland, against Wilkinson, Son & Welch; that afterwards defendant in error was admitted as a party defendant in said action, and on the 17th day of July, 1894, judgment was had in said action that plaintiff in error recover nothing, and that the then defendants in the action, including defendant in error herein, recover their costs against plaintiff in error herein; that on the 2d day of August, 1894, the costs in said action were duly taxed and allowed in the sum of £302 1s. 4d., which in United States money would equal the sum of $1,473.55. It was further pleaded in the petition that no part of this judgment for costs had been paid, and

Digitized by Google

that defendant in error was the sole owner thereof. To this petition an answer was filed by plaintiff in error, consisting of a denial, both general and special, which need not be set out. Trial was had to a jury, which on November 4, 1897, resulted in a judgment in favor of defendant in error in the sum of $1,465.55, to reverse which the cause is brought to this court.

Plaintiff in error contends: (1) That the trial court erred in admitting in evidence a transcript of the judgment entered in the action pending in England, for the reason that the same was not properly authenticated; (2) that the court erred in permitting defendant in error to amend his petition, setting out that he was the owner of the judgment sued upon; and (3) that the court erred in instructing the jury to find for defendant in error.

The statute providing the manner of authentication of the proceedings of the courts of a foreign country is as follows: "Copies of records and proceedings in the courts of a foreign country may be admitted in evidence, upon being authenticated as follows: First—By official attestation of the clerk or officer in whose custody such records are legally kept. Second—By the certificate of one of the judges or magistrates of such court, that the person so attesting is the clerk or officer legally entrusted with the custody of such records, and that the signature to his attestation is genuine. Third—By the official certificate of the officer who has the custody of the principal seal of the government under whose authority the court is held, attested by said seal, stating that such court is duly constituted, specifying the general nature of its jurisdiction, and verifying the seal of the court." Section 416, Ann. Code 1901.

An examination of the transcript in question discloses, first, an official attestation of the record of the judgment by one Francis A. Stringer, under seal, certifying that he is the head clerk of the Writ, Appearance, and Judgment Department, Central Office of the Supreme Court of Judicature of England, and the officer in whose custody such records are legally kept; second, a certificate by Sir Charles Russell, Lord Chief Justice of England, one of the justices of said court, who certifies that the attesting clerk is the officer legally intrusted with the custody of such records, and that the signature to his attestation is genuine; and, third, a certificate of Baron Halsbury, Lord High Chancellor of Great Britain and Keeper of the Great Seal, who certifies under the great seal that the court wherein the judgment was rendered is duly constituted, and that the court has and exercises original jurisdiction in all matters and proceedings, and that the seal of said court which is attached is the true and genuine seal of said court. This seems very fully and literally to comply with the statutory requirements, and the transcript was properly admitted in evidence.

It is next contended that the court erred in permitting defendant in error, plaintiff below, to amend his petition, setting up exclusive ownership of the judgment sued upon. It does not appear from the transcript or bill of exceptions what the amendment complained of was. For that reason it cannot be considered. But, as it fairly appears from other portions of the petition that defendant in error was the owner of the judgment, it is very clear that the amendment was within the discretion of the trial court, and, as plaintiff in error did not ask to have the cause continued, it seems that no prejudice resulted from the amendment.

Plaintiff in error offered no evidence on the trial, and at the close of the evidence offered by defendant in error the court instructed the jury to bring in a verdict in his favor. This instruction is assigned as error. Plaintiff in error contends that, inasmuch as there was offered in evidence no formal assignment of the interest of Wilkinson, Son & Welch in the judgment to defendant in error, therefore there could be no recovery. This contention is wholly without merit. Section 29 of the Code provides: "Every action must be prosecuted in the name of the real party in interest." Hoagland v. Van Etten, 22 Neb. 681, 35 N. W. 869; Kinsella v. Sharp, 47 Neb. 664, 66 N. W. 634. It very clearly appears from the evidence in the record that Wilkinson, Son & Welch, against whom plaintiff in error originally brought the suit, were acting simply as the agents of defendant in error, and that he was the real party in interest in that controversy, and so the real party in interest in the judgment, and a proper party plaintiff in this action. No formal assignment of the interest of Wilkinson, Son & Welch was essential to entitle him to maintain the action for costs. Field v. Wheeler, 120 N. C. 264, 26 S. E. 812.

Payment of the judgment was not pleaded or proven, and it follows that no verdict could have been permitted to stand except the one instructed by the court. It has been repeatedly held by this court—so often, indeed, that it may be said to be no longer an open question—that when, in a trial to a jury, the evidence is not conflicting, and reasonable men can draw but one conclusion from the facts and circumstances proved, the court may properly direct the verdict which the jury shall return. C., B. & Q. R. Co. v. Barnard, 32 Neb. 306, 49 N. W. 362.

There appears to be no error in the proceedings of the trial court, and it is therefore recommended that the judgment of the district court be affirmed.

DAY and HASTINGS, CC., concur.

Affirmed.

Digitized by Google

GROVE et al. v. DINEEN et al.

(Supreme Court of Nebraska. July 3, 1903.)

VENDOR AND PURCHASER—LAND CONTRACT—FORECLOSURE—APPEAL.

1. Applications for strict foreclosure of contracts for the sale of lands are addressed to the sound legal discretion of the district court, and such foreclosure will be granted in cases where it would be unjust and inequitable to refuse them.

2. On an appeal from a decree of the district court, where there is no bill of exceptions preserved, and the record contains nothing but the clerk's transcript, we are only required to examine the record far enough to ascertain whether or not the pleadings are sufficient to sustain the decree.

3. In such a case the general presumption exists that every proceeding essential to the legality and validity of the judgment was validly taken. And where, on any contingency supposable in the state of the record, the decision below might have been valid, such contingency will be so presumed.

4. In the absence of a bill of exceptions, if the petition or pleading on which the decree is predicated contains sufficient statements of a cause, and a proper prayer for the relief thereby afforded, questions which necessitate a reference to the bill of exceptions will not be considered, and an affirmance of the decree is proper.

Commissioners' Opinion. Department No. 2. Appeal from District Court, Boone County; Paul, Judge.

"Not to be officially reported."

Action by Jacob F. Grove and others against J. M. Dineen and others. Judgment for plaintiffs, and defendant John W. Van Gilder appeals. Affirmed.

Byron G. Burbank, for appellant. E. J. Clements and A. E. Garten, for appellees.

BARNES, C. This was an action brought in the district court of Boone county for a strict foreclosure of a contract for the sale of real estate. The petition contained a copy of the contract, as follows: "This agreement, made and entered into this 19th day of December, 1901, by and between J. F. Grove and Mary J. Grove, husband and wife, parties of the first part, and J. M. Dineen, party of the second part, witnesseth, that said parties of the first part agree to sell to the party of the second part, and the said party of the second part agrees to purchase of said parties of the first part the following described real estate situated in the county of Boone and state of Nebraska, to-wit: The west half, and the west half of the east half, of section 18 in township 18, range 8 west of the 6th P. M., containing 480 acres, more or less, according to government survey. The party of the second part agrees to pay said party of the first part as a full consideration of the above described premises the sum of $11,250; $4,000 cash in hand, the receipt whereof is hereby acknowledged, and $2,750 March 1st, 1902, and a first mortgage on said above described real estate for $4,500 due and payable March 1st, 1905, with interest at six per cent. from March 1st, 1902, with option to pay on or before. It being understood between the parties hereto that should said party of the second part fail to make the payment of $2,750 and execute mortgage for $4,500 on March 1st, 1902, the $4,000 cash payment herein made is to be declared forfeited to the said parties of the first part. On full payment of purchase price as herein recited said parties of the first part, or their legal representative or assigns, agree to make to said party of the second part or his legal representatives or assigns, a valid title in fee simple to the above described premises, and for that purpose shall execute and deliver to said party of the second part a good and sufficient warrant deed free and clear of all incumbrances, except ——; parties of the first part also agree to furnish parties of the second part an abstract of title to said above described premises on or before the 1st day of March, 1902. Upon full payment of the purchase price as above recited by parties of the second part, parties of the first part agree to give quiet and peaceable possession of the above described premises on or before the 1st day of March, 1902. This contract is subject to a certain lease of August Dutchess. The said parties hereto respectively bind themselves, their heirs, assigns, and legal representatives, to the faithful performance of the terms of this agreement. In witness whereof said parties have hereunto signed this instrument in duplicate the day and year above written." Among other allegations contained in the petition we find the following: "That thereafter, on the 31st day of December, 1901, J. M. Dineen, defendant herein, by an instrument in writing, assigned his rights in said contract to John W. Van Gilder, defendant herein." (The petition then set out the assignment, which was in the ordinary form.) "That the plaintiffs have duly performed all of the conditions of said agreement on their part to be performed in pursuance of the terms of said agreement, but the defendant refused, and still refuses, to comply with the terms thereof, and pay the purchase money as agreed to be paid on or before March 1, 1902, or any part thereof, and refused to make and execute a mortgage to the plaintiff as agreed, and refused to perform the conditions of said agreement." The prayer for relief was as follows: "Plaintiffs therefore pray that said defendants be required to perform said agreement, and pay the plaintiff the sum of $2,750, and execute a mortgage for the sum of $4,500 as purchase money of said land described in the foregoing petition, with interest from March 1, 1902, as agreed in said contract; or, in case of refusal to complete the contract, that said defendants and all persons claiming under them be forever barred and foreclosed of all equity of redemption, and all right to and interest in said premises heretofore described, and said contract be canceled, and for such other and further relief as equity may require." Service of summons was duly made on all of the defendants. Defendant Dineen

Digitized by Google

made no appearance, and judgment was rendered against him by default. The defendant John W. Van Gilder filed the following answer: "Comes now the defendant John W. Van Gilder, and for answer to the petition of the plaintiffs herein, says: (1) That he admits the allegations contained in paragraphs 1, 2, 3, and 4 of said petition. (2) That this defendant denies each and every other allegation in said petition contained. (3) This defendant, further continuing, says: That while the assignment mentioned in paragraph three of said petition by James M. Dineen is as to this defendant, John W. Van Gilder, of the contract set forth in paragraph one of said petition, nevertheless this defendant received the assignment of said contract as set forth in said paragraph three for his own personal individual use equal and jointly with his brother, James E. Van Gilder; and that this defendant and the said James E. Van Gilder are the owners, respectively, of an undivided one-half interest in and to the premises described in said petition, and that each of them are in the actual possession of the premises described in said petition, and in the actual use and occupation of the same. Wherefore this defendant prays that the petition herein be dismissed at plaintiffs' cost, and for such other and further relief as may be just and equitable upon the trial of this cause for the full and complete protection of this defendant." The reply was a general denial. The cause was duly tried to the court, and the following decree was rendered: "Upon consideration of the pleadings and the evidence, the court finds that the allegations contained in the petition are true. It is therefore ordered, adjudged, and decreed by the court that the defendants, and all persons claiming by, under, or through them, or either of them, be, and they are hereby, forever barred and foreclosed of all and any equity of redemption or any right or interest in and to the following described premises [here follows description as set forth in the petition], and that the contract set forth in plaintiff's petition between J. F. Grove and Mary J. Grove, husband and wife, and J. M. Dineen, and recorded in Book 3 of Miscellaneous Records of Boone county, Nebraska, in the office of the county clerk of said county, at page 469 thereof, is hereby canceled, annulled, and made of no force or effect whatever; and that the plaintiffs pay the costs of this action, taxed at $19.23." From this decree the defendant Van Gilder appeals to this court, and now contends that the decree is unjust and inequitable, that time was not made the essence of the contract, that the decree should have provided for the sale of the land as upon a mortgage foreclosure, and that the decree is not in harmony with the prayer of the petition.

It appears from the record that the cause was regularly tried, and the evidence introduced by the plaintiffs was taken by the reporter, but no bill of exceptions was ever procured, served, or settled, and the record as it comes here contains nothing but the clerk's transcript. Therefore the only question which we can consider is whether or not, under the pleadings, the trial court was authorized to render the judgment or decree complained of. The rule is well established in this state that courts of equity will decree a strict foreclosure of land contracts; that applications of that character are addressed to the sound legal discretion of the court, and they will be granted in cases where it would be inequitable and unjust to refuse them. Harrington v. Birdsall, 38 Neb. 176, 56 N. W. 961. In the case of Gardels v. Kloke, 36 Neb. 493, 54 N. W. 834, we find the following: "An action will lie to foreclose the right of a purchaser in a contract for the sale of real estate, and the court, by its judgment, may direct the purchaser to comply with the terms of the contract within a reasonable time, to be named by the court, or order the premises sold, and the proceeds to the payment of the judgment. The equities of the case will determine the character of the decree." A decree of strict foreclosure was had in the case of Farmers' & Merchants' State Bank v. Thornburg, 54 Neb. 782, 75 N. W. 45. So it may be said that the district court had power to render the decree.

It will be observed from an examination of the answer above quoted that the appellant based his defense on a general denial. He made no excuse for his failure to perform the contract. He asked for no further time to enable him to pay the $2,750 and execute a mortgage as he was required to do by the terms of the agreement, and in fact made no appeal to the court for any equitable relief whatever. It is quite probable, if the appellant had asked for such relief, it would have been granted. The prayer of the petition, which contained a demand for general equitable relief, was broad enough to sustain the decree complained of, and we are bound to presume that the evidence disclosed a state of facts which fully authorized the findings and judgment. The rule is that, where the record does not purport to contain the evidence, a state of facts will be presumed proved in the trial court fully authorizing the rulings, verdict, and judgment of that court. 2 Ency. Pl. & Pr. 441. "To sustain a decision appealed from, the general presumption exists, where the record does not affirmatively show error, that every proceeding essential to the legality and validity of the judgment was validly taken. And where, on any contingency supposable in the state of the record, the decision below might have been valid, such contingency will be presumed." 2 Ency. Pl. & Pr. 431–433. "In the absence of a bill of exceptions, if the petition or pleading on which the decree is predicated contains sufficient statements of a cause, and a proper prayer for

Digitized by Google

the relief thereby afforded, questions which for decision necessitate a reference to the bill of exceptions will not be considered, and an affirmance of the decree is proper." Beatrice Sav. Bank v. Beatrice Chautauqua Assembly, 54 Neb. 592, 74 N. W. 1065. In Alling v. Fisher, 55 Neb. 239, 75 N. W. 536, it was held that: "In the review of cases by appellate proceedings in the Supreme Court, the transcript being silent as to matters before the district court, it will be presumed that the facts there disclosed were of such a character as to warrant the judgment rendered." An examination of the authorities convinces us that this is the well-established rule not only in this state, but in the Supreme Court of the United States, and in all of the states of the Union.

While the forfeiture of the first payment, at first blush, may seem inequitable, yet Dineen, who made it, is not complaining. And in the court below the appellant presented no reason why such forfeiture should not be declared according to the terms of the contract. In accordance with the rule announced above, we must presume that the evidence disclosed a state of facts which amply justified the decree, although it has that effect.

Again, the appellant is the assignee of the contract, and is not personally liable to pay a deficiency, in case there should be one, on a sale of the land; neither is he liable in an action to recover the balance due on the contract. Not having excused his default in any way, nor asked for any equitable relief, or shown any reason why the payment should not be forfeited, he is in no condition to complain of the judgment of the trial court.

It follows that, in the absence of the bill of exceptions, as above stated, the judgment and decree of the trial court will be presumed to be correct, and we recommend that it be affirmed.

ALBERT and GLANVILLE, CC., concur.

PER CURIAM. The conclusions reached by the Commissioners are approved, and, it appearing that the adoption of the recommendations made will result in a right decision of the cause, it is ordered that the judgment of the district court be affirmed.

FARMERS' & MERCHANTS' INS. CO. v. HAHN.

(Supreme Court of Nebraska. July 10, 1901.)

APPEAL—REVIEW—FINDINGS OF FACT.

1. The finding of a jury that a deed was made as an absolute conveyance of the title, and not as a mortgage to secure a debt due the grantee, will not be disturbed where there is evidence sufficient to support such finding.

On Rehearing.

2. A policy of insurance provided that the same should be void if the insured was not the absolute owner of the property covered thereby. The testimony disclosed that at the time of taking his deed to the property the insured, as part of the same transaction, executed to his grantor a writing, being either in the nature of a defeasance or a contract to resell at a given price within a certain time. The writing was not produced, nor was its contents shown by any witness who knew the same. *Held*, that no recovery could be had on the policy.

Commissioners' Opinion. Department No. 3. Error to District Court, Johnson County; Stull, Judge.

"Not to be officially reported."

Action by William Hahn against the Farmers' & Merchants' Insurance Company. Judgment for plaintiff, and defendant brings error. Reversed.

Rose & England, for plaintiff in error. M. B. C. True and S. P. Davidson, for defendant in error.

DUFFIE, C. This is an action brought on the policy of insurance issued by the plaintiff in error to the defendant in error upon a dwelling house situated in the town of Graf, Johnson county, Neb. The principal defense is set out in the third paragraph of the answer as follows: "This defendant alleges that said policy was issued upon a written application made by plaintiff, which was made and is a part of said policy, and each statement of which was made and is a warranty on the part of said plaintiff, as fully appears by said policy; that in said application plaintiff stated and warranted to the defendant that he was the owner of said property alleged to have been destroyed, and had title in fee thereto. Defendant alleges that in truth and fact the defendant was not then, is not and has not been, the owner of said property, but that he had and has but a mortgagee's interest therein; that the deed which defendant claims to have of said property was and is, and was intended by the parties thereto to be, simply a mortgage to secure to defendant a loan by him made upon said property; and that, if the plaintiff had truly stated his interest in said property, defendant would not have issued to him a policy of insurance thereon."

It was claimed by the plaintiff in error that Hahn held a mortgage upon the property executed by one Somberg, the owner; that insurance could not be procured thereon while it was so incumbered; and that to avoid this difficulty, and for the purpose of obtaining insurance, Somberg conveyed the property to Hahn, and took back an agreement by the terms of which Hahn was to reconvey upon the payment of the amount of the mortgage debt.

It is undisputed that at the time the deed was made some kind of an agreement in writing was executed by Hahn and delivered to Somberg, but the agreement was not produced on the trial. The evidence of the plaintiff below tended to show that the con-

Digitized by Google

veyance was an absolute conveyance of the property, and that Hahn in writing agreed to reconvey to Somberg within the period of two years, upon payment of a certain sum of money, Somberg to retain possession of the property, and being chargeable with rent in case he did not purchase within two years. Upon this phase of the case the court instructed as follows:

"(8) The second question that may perplex you is as to the ownership of the plaintiff at the time the insurance policy issued. It is claimed by the defendant that the plaintiff, Hahn, was merely a mortgagee; that is, held a lien on the property for the payment of money; and that the deed made by Somberg to Hahn was made for the sole purpose of securing Hahn in the obtaining what Somberg owed him. If from all the evidence in this case you are satisfied that at the time of the execution and delivery of the deed offered in evidence from Somberg to the plaintiff the plaintiff took the same as absolute owner, with no understanding that it was given for security, then it was not a mortgage; but, if the deed was taken with the understanding between the plaintiff and Somberg that it was to secure the plaintiff in the payment of money due him from Somberg, then it was nothing but a mortgage.

"(9) If you are satisfied from the evidence in this case that at the time of the execution and delivery of the deed from Somberg to plaintiff, which was offered in evidence, that the plaintiff agreed to reconvey or resell said property to Somberg within a certain specified time, for a specified amount, such understanding was perfectly legitimate, and would not render said conveyance and understanding at the time a mere mortgage."

These instructions fairly present the question to the jury, and while from the evidence we might not, as an original proposition, find that there was an absolute conveyance of the property with an agreement to resell, there was evidence sufficient to support the finding of the jury to that effect, and we therefore recommend that the judgment be affirmed.

AMES and ALBERT, CC., concur.

Affirmed.

On Rehearing.

(Jan. 8, 1902.)

An opinion was filed heretofore in this case affirming the judgment of the district. A rehearing was granted upon the application of the plaintiff in error, and, on further argument and examination of the record, we have concluded that on account of matters which escaped our attention heretofore the case ought to be reversed and remanded for another trial.

The action was brought on a policy of insurance issued by the plaintiff in error to the defendant in error upon a dwelling house situated in the town of Graf, Johnson county, Neb. The principal defense set out in the third paragraph of the answer is as follows: "This defendant alleges that said policy was issued upon a written application made by plaintiff, which was made and is a part of said policy, and each statement of which was made and is a warranty on the part of said plaintiff, as fully appears by said policy; that in said application plaintiff stated and warranted to the defendant that he was the owner of said property alleged to have been destroyed and had title in fee thereto. Defendant alleges that, in truth and in fact, the plaintiff was not then, and is not, and has not been, the owner of said property, but that he had and has but a mortgagee's interest therein; that the deed which the defendant claims to have of said property was and is intended by the parties thereto to be simply a mortgage to secure to the defendant a loan by him made upon said property; and that if the plaintiff had truly stated his interest in said property defendant would not have issued to him a policy of insurance thereon."

It is undisputed that some time prior to the issuing of said policy Hahn held a mortgage upon the property insured, executed by one Somberg, the owner, that insurance could not be procured thereon while it was so incumbered, and that a deed to the property was made by Somberg to Hahn. It is undisputed that at the time the deed was made to Hahn an agreement in writing of some kind was executed by him and delivered to Somberg, but this agreement was not produced on the trial, and we are unable to state what was the character of this writing. That it related to the conveyance made by Somberg to Hahn is not denied.

On the former hearing we were of opinion that the evidence tended to show that the conveyance from Somberg to Hahn was an absolute conveyance, and that the proof was sufficient to support the finding of the jury that such was the case. The testimony is undisputed that after Hahn ascertained that he could not procure insurance upon the property as mortgagee he placed it in the hands of an attorney to be foreclosed; that some conversation was had between the parties relating to the saving of the expense of a foreclosure by taking a deed from Somberg in satisfaction of the mortgage. It is further disclosed that Somberg was unwilling to relinquish all interest in the property, and there is evidence to the effect that a proposition was made to give him a definite time within which to repurchase. One thing is quite certain—Somberg conveyed the property to Hahn, and Hahn gave back a writing of some kind relating to the property. The plaintiff in error claims that this was a defeasance giving Hahn the right to redeem within a specified time, while the defendant in error asserts that the sale and conveyance

Digitized by Google

was absolute, and that the writing given to Somberg was an agreement on the part of Hahn giving him privilege to repurchase within a fixed time, and to occupy the property in the meantime, paying rent therefor in case his option to repurchase should not be exercised. Relating to this transaction, Somberg testified as follows: "Q. Were you living in the house at the time? A. Yes, sir. Q. How long had you been living in it prior to that? A. I guess it would be close to five years. Q. Do you remember the circumstances of the execution of the deed by yourself and wife to Mr. William Hahn? A. Yes, sir. Q. Are you the person whose name is signed to that deed? A. Yes, sir. Q. Did you have any other writing executed between you and the parties (plaintiff) at that time? A. Yes, sir. Q. Have you got that writing? A. I got some writing. It is burned up, together with all my papers. That writing Mr. Hahn had. I don't know where it is. It may be in Graf. Q. What is that? A. I had one writing, and Mr. Hahn had. My writing burned up. Q. What was the writing given for? A. The writing gave to me when I paid to him (plaintiff) the money he was to deed me back the property. I was not going to sell him that time. Q. Were you living in the property at the time this was done? A. Yes, sir. By the Court: Q. Was there a writing? Two copies? A. Yes, sir. Q. Who had the other copy? A. William Hahn. Q. Plaintiff had the other copy? A. Yes, sir. By Defendant's Attorney: Q. Were you living in the house at the time these papers were burned? A. Yes, sir. Q. Continued from that time up to the time of the fire to live in this same house? A. Yes, sir."

Hahn, the defendant in error, testified as follows: "Q. Handing you the deed, plaintiff's Exhibit 1, B. Somberg and wife to Henry (William) Hahn, are you the William Hahn designated here? A. Yes, sir. Q. Did you have any other contract relating to this transfer? A. Yes, sir. Q. Have you it? A. No, sir. Q. Where is the contract? A. I could not say. Q. What is that? A. That I could not say. Q. Was it a contract respecting this conveyance or about this identical property? A. Yes, sir. Q. Part of the same transaction? A. Yes, a part of it; yes, sir. Q. You don't know who has it? A. No; I could not say."

The only evidence tending in any degree to show that the writing given back to Hahn was an option to purchase came from the witness Chamberlain, which is as follows: "Q. What was the agreement about Mr. Hahn taking the property absolutely, and then agreeing to reconvey it if Somberg could pay for it in two years? A. Mr. Hahn said that he would be willing to do that, and did do it. Q. Was it talked at that time that this change would have to be made in order to get insurance, and that it could not be got in any other way? A. As I remember it, Mr. Hahn or Mr. Somberg went on, and they told me that they could not get any insurance, and I think that was one of the reasons why Mr. Hahn felt his loan was not safe, and he wanted to secure it. He wanted to get the property that was covered by the mortgage, and I advised the easiest and cheapest way out of it was to get the title in him. Q. Now, in reference to Mr. Somberg getting a deed back, what was the understanding about that? A. The understanding was simply this: Mr. Hahn told him if got the money, and could get up the amount that he owed him within the time—I think it was two years—that he would let him have the property back. Q. Reconvey it to him? A. He would not agree to do it on any longer period, but Mr. Hahn wanted that understanding that if he was able to pay him he could redeem the property or get it back; have a deed. By the Court: Q. At the original price of what was owing? A. I think less some rental condition that was in there. Mr. Hahn was to have been paid rent from this on. Q. You mean Mr. Somberg? A. Yes, sir. Q. That was to apply when he paid it on the principal due? A. I think it was all to be reduced if he was able to raise the money. Q. To redeem? A. Yes, sir. Q. If he would not, Mr. Somberg paid the rent like any other tenant? A. Yes, sir. Q. Title to remain absolutely in Mr. Hahn? A. That is my understanding."

The conversation referred to was prior to the making of the deed, and while it may be that an agreement for an absolute conveyance, with a privilege to repurchase, as agreed upon between the parties, no one has testified, or attempted to testify, as to the character of the instrument given by Somberg to Hahn. Whether it was an option to purchase within a definite time, or a defeasance by the terms of which Hahn was to reconvey upon the payment of the mortgage debt, no one has attempted to say. The paper spoke the agreement between the parties, and in its absence its contents should have been shown by some competent testimony. The preliminary talk between the parties leading up to its execution is no evidence of what the writing contained.

We are satisfied from a re-examination of the record that there was no evidence whatever going to show that Hahn was the absolute owner of the property, and under the evidence the court should have so instructed. Some questions are raised by the plaintiff in error relating to certain of the instructions given by the court, but, as the case will have to be remanded for another trial, it is not necessary to discuss them at this time.

We recommend that the judgment of the district court be reversed, and the case remanded for a new trial.

AMES and ALBERT, CC., concur.

Reversed and remanded.

Digitized by Google

GALBRAITH v. PAINE et al.

(Supreme Court of North Dakota. July 1, 1903.)

MAINTENANCE—CONVEYANCE OF PRETENDED TITLE—ADVERSE CLAIMANT—RIGHT OF ACTION.

1. The common-law doctrine which condemns as void a grant of land, which is held adversely under claim of title, by a grantor who has not been in possession or taken rent for the space of a year prior thereto, as an act of maintenance, was not abolished by the Revised Codes of 1895, but was perpetuated, and remains in force in this state.

2. Section 7002, Rev. Codes, makes it a misdemeanor for any person to convey any pretended title to land, unless the grantor has been in possession or taken rent for the space of a year prior thereto. A deed executed in violation of this section is void, but its invalidity extends only to the party in adverse possession claiming title. As between the grantor and grantee and all other persons, it is valid.

3. The grantee under a deed which is invalid under the above section may not maintain an action in his own name against the adverse claimant, because, as to the latter, his deed is invalid. An action may be maintained against such claimant, however, in the name of the grantor for the grantee's use; and for the purpose of maintaining such action the grantor is the real party in interest within the meaning of section 5221, Rev. Codes.

4. It is *held*, in an action to determine adverse claims to real estate upon a trial de novo under section 5630, Rev. Codes, that the deeds upon which plaintiff relies to establish his title were executed and delivered in violation of section 7002, Rev. Codes, and are, therefore, void as to the defendant.

(Syllabus by the Court.)

Appeal from District Court, Nelson County; C. J. Fisk, Judge.

Action by John P. Galbraith against J. A. Paine and others. Judgment for plaintiff, and defendant Paine appeals. Reversed.

Newman, Spalding & Stambaugh, for appellant. C. J. Murphy, for respondent.

YOUNG, C. J. This is an action to determine adverse claims to 160 acres of land situated in Nelson county, and to recover possession. The plaintiff deraigns his title as follows: (1) A patent from the United States government to Frank A. Willson, dated March 26, 1886; (2) a quitclaim deed from said Frank A. Willson to the St. Paul Harvester Company, a corporation, executed and delivered on May 8, 1900; (3) a quitclaim deed from the St. Paul Harvester Company to the plaintiff, dated April 25, 1901. All of said deeds were recorded at or about the time of their execution. The defendant Paine claims title under two tax deeds executed by the county auditor of Nelson county—one in 1894, upon a sale of the premises for the tax of 1889; the other executed in 1895 upon a sale for the tax of 1890. He also claims liens under six tax certificates issued upon tax sales for the taxes of 1891, 1892, 1895, 1896, 1897, and 1898, and also for taxes paid for the years 1893, 1894, 1899, and 1900. Paine took possession of the premises on May 7, 1898, and leased the same to the defendant Turcotte upon shares. His possession has continued since, and during the years 1898, 1899, and 1900 he received the rents from his tenant, and at all times held possession and claimed title to said premises under his tax deeds. The trial court found that the plaintiff was the owner of the premises, and entitled to possession thereof; that both of defendant Paine's tax deeds were void; that all of his tax certificates were void, except the one issued in 1897 upon the tax of 1896; and, further, that the taxes paid by the defendant were voluntarily paid, and do not constitute liens. Judgment was entered canceling and discharging of record all claims and demands of the defendant Paine by virtue of his tax deeds, tax certificates, and payment of taxes, except as to the tax certificate for the tax of 1896 and awarding possession of the premises to the plaintiff. The defendant Paine appeals from the judgment, and asks a review under section 5630, Rev. Codes.

The case involves no disputed facts. The first question presented relates to plaintiff's title. Counsel for appellant contend that plaintiff has failed to establish his title. Their contention is that Willson's deed to the St. Paul Harvester Company and the latter's deed to the plaintiff are void as to the defendant, and that, plaintiff having failed to establish his title and right of possession in the premises, the action should, therefore, be dismissed. This contention must be sustained. It is agreed that neither Willson nor the St. Paul Harvester Company were in possession of the premises, or took the rents and profits thereof, during the year preceding the execution of their deeds. In fact, the St. Paul Harvester Company, the plaintiff's grantor, never was in possession. On the other hand, the defendant Paine was in possession three years before the deed to plaintiff was executed and two years before the Willson deed was executed, claiming title under his tax deeds. Further, he received the rents and profits of the premises during all of that period. Upon this state of facts, under the law of this state, both deeds must be held void as to the defendant. The common-law doctrine, which condemns as void conveyances of real estate when title is in suit, or when the vendor has not been in possession or taken rents for the space of a year prior to the conveyance, as acts of champerty and maintenance, has not been abolished in this state, but, on the contrary, is perpetuated by express statute. Section 7001, Rev. Codes, makes it a misdemeanor for any person to take a conveyance of lands, or of any interest or estate therein, from any person not in possession, where such lands are the subject of controversy in court, knowing the pendency of the suit and that the grantor was not in possession. Section 7002,

¶ 1. See Champerty and Maintenance, vol. 9, Cent. Dig. §§ 54, 69.

Digitized by Google

Rev. Codes, provides that: "Every person who buys or sells or in any manner procures, or makes or takes any promise or covenant to convey any pretended right or title to any lands or tenements, unless the grantor thereof or the person making such promise or covenant has been in possession, or he and those by whom he claims have been in possession of the same, or of the reversion and remainder thereof, or have taken the rents and profits thereof for the space of one year before such grant, conveyance, sale, promise or covenant made, is guilty of a misdemeanor." The sweeping condemnation of the above sections is modified by section 7003, which reads as follows: "The last two sections shall not be construed to prevent any person having a just title to lands, upon which there shall be an adverse possession, from executing a mortgage upon such lands." The fact that mortgages are thus excepted strongly emphasizes the legislative purpose to condemn as void all conveyances not thus excepted. Section 4708 of the Civil Code repeats the exception of mortgages from the condemnation of the foregoing provisions of the Penal Code. That section provides that: "A mortgage may be created upon property held adversely to the mortgagor. A mortgage of property held adversely to the mortgagor takes effect from the time at which he or one claiming under him obtains possession of the property, but has precedence over every lien upon the mortgagor's interest in the property, created subsequently to the recording of the mortgage." The right to mortgage is saved, but it will be noted that by the very terms of the statute a mortgage given upon property adversely held does not take effect until the mortgagor, or his successors, obtain possession of the property. The facts of this case bring both the Willson deed and the St. Paul Harvester Company deed under the direct condemnation of section 7002, supra. The grantors had not been in possession of the premises or received the rents thereof for the space of a year prior to the execution of the deeds. The title attempted to be conveyed was a "pretended title," according to the meaning of that phrase as it is used in the statute. "The words of the statute are that no person shall buy or sell any pretended right or title, or make or take any promise, grant, or covenant to have any right or title of any person to any lands, etc. Under this statute it is well settled that it is immaterial whether the right or title purchased or sold be good or bad; for, if it be ever so good, if the vendor is not in possession, nothing passes by the deed, and the case comes within the statute." Tomb v. Sherwood, 13 Johns. 288.

Chancellor Kent, in reviewing the common-law doctrine upon which the New York statute just quoted is based, in 4 Kent's Comm. 446, said: "There is one check to the power of alienation of a right or interest in land, taken from the statute of 32 Hen. VIII, c. 9, against selling pretended titles; and a pretended title, within the purview of the common law, is where one person lays claim to land of which another is in possession, holding adversely to the claim. Every grant of land, except as a release, is void as an act of maintenance, if, at the time, the lands are in the actual possession of another person, claiming under a title adverse to that of the grantor. This principle has always been received as settled law in New York, and it has been incorporated into the Revised Statutes. But even in such a case the claimant is allowed by the statute to execute a valid mortgage of the lands, which has preference, from the time of recording it, over subsequent judgments and mortgages, and binds the lands from the time of recovering possession. The ancient policy, which prohibited the sale of pretended titles, and held the conveyance to a third person of lands held adversely at the time to be an act of maintenance, was founded upon a state of society which does not exist in this country. A right of entry was not assignable at common law, because, said Lord Coke, 'under colour thereof pretended titles might be granted to great men, whereby right might be trodden down, and the weak oppressed.' The repeated statutes which were passed in the reigns of Edward I and Edward III against champerty and maintenance arose from the embarrassments which attended the administration of justice in those turbulent times from the dangerous influence and oppression of men in power. The statute of 32 Hen. VIII imposed a forfeiture upon the seller of the whole value of the lands sold, and the same penalty upon the buyer also, if he purchased knowingly. This severe statute was re-enacted literally in New York in 1788, and in Virginia in 1786; but the penal provisions are altered by the New York Revised Statutes, which have abolished the forfeiture, and made it a misdemeanor for any person to buy or sell, or make or take a promise or covenant to convey, unless the grantor, or those by whom he claims, shall have been in possession of the land, or of the reversion or remainder thereof, or of the rents and profits, for the space of a year preceding. The provision does not apply to a mortgage of the lands, nor to a release of the same to the person in lawful possession. It seems to be unnecessarily harsh; but it is to be observed that it was a principle conformable to the whole genius and policy of the common law that the grantor in a conveyance of land (unless in the case of a mere release to the party in possession) should have in him at the time a right of possession. Feoffment was void without livery of seisin, and without possession a man could not make livery of seisin. This principle is not peculiar to the English law. It was a fundamental doctrine of the law of feuds on the continent of Europe. No feud could be cre-

Digitized by Google

ated or transferred without investiture, or putting the tenant into possession; and delivery of possession is still requisite in Holland and Germany to the transfer of real property. It seems to be the general sense and usage of mankind that the transfer of real property should not be valid unless the grantor hath the capacity, as well as the intention, to deliver possession. Sir William Blackstone says that it prevails in the Codes of 'all well-governed nations,' for possession is an essential part of title and dominion over property. * * * The doctrine that a conveyance by a party out of possession, and with an adverse possession against him, is void, prevails equally in Connecticut, Massachusetts, Vermont, Maryland, Virginia, North Carolina, Tennessee, Kentucky, Indiana, and probably in most of the other states. There are some states, such as New Hampshire, Pennsylvania, Illinois, Missouri, and Louisiana, in which the doctrine does not exist."

In Crary v. Goodman, 22 N. Y. 170, Selden, J., states that the purpose of the statute was to prevent the transfer of disputed titles, and compel their settlement between the original parties. Where the doctrine prevails, deeds executed in violation thereof are, without exception, held to be void. The invalidity of such deeds, however, exists only between the grantor and those holding adversely and their successors. As between the parties to the deed and all other persons, it is valid. It does not work a forfeiture of title in favor of the adverse possessor. While it is true that the grantee may not maintain an action in his own name against the adverse possessor unless expressly authorized by statute, for the reason that as to the latter the deed is void, yet an action may be maintained in the name of the grantor for his use. Such, generally stated, is the doctrine of the cases. Jackson v. Demont, 9 Johns. 55, 6 Am. Dec. 259; Livingston v. Peru Iron Co., 9 Wend. 512; Van Hoesen v. Benham, 15 Wend. 165; Jackson v. Brincherhoff, 3 Johns. Cas. 101; Williams v. Jackson, 5 Johns. 489; Jackson v. Leggett, 7 Wend. 377; Livingston v. Proseus, 2 Hill, 526; Chamberlain v. Taylor, 12 Abb. N. C. 473; Hamilton v. Wright, 37 N. Y. 501; Hassenfrats v. Kelly, 13 Johns. 466; Teele v. Fonda, 7 Johns. 251.

In Livingston v. Proseus, supra, Bronson, J., speaking for the court, said: "It is extremely well settled that a conveyance of lands which are at the time held adversely to the grantor is inoperative and void. It would seem to follow from this doctrine that the title remains in the grantor, and that he may assert it in the same manner as though the deed had not been made. But it is equally well settled that, as between grantor and grantee, and persons standing in legal privity with them, the deed is operative, and passes the title. * * * From these two propositions, to wit, that the owner has parted with his title, and that the grantee cannot assert it on account of the adverse holding which avoids the deed, it has been supposed to result as a necessary consequence that the title was extinguished or lost. But it has been denied that any such consequence follows. * * * Indeed, it may be laid down as a maxim in the law that a title which once existed must continue to reside somewhere. It cannot be annihilated. * * * It is often said in the books, without any qualification, that the deed is void. But that is only true in relation to the person holding adversely and those who afterwards come in under him. As to all the rest of the world the deed is valid, and passes the title from the grantor to the grantee. This, I think, is sufficiently established by the cases already mentioned and the authorities on which they rest. The deed is void as against the party who might otherwise be injured, but it is good as to all others. * * * But as against the person holding adversely the deed is utterly void—a mere nullity. There was an attempt to convey, but the parties failed to accomplish the object. The title still remains in the original proprietor, and he may—indeed, must—sue to recover the land. It is true that the recovery will inure to the benefit of the grantee in the deed: but that is a matter between him and the grantor, and with which the person holding adversely has nothing to do. It is enough for him that the deed does him no injury."

An examination of the authorities will show that, while "a deed of a disseisee conveys no title which can be enforced in the name of the grantee against the disseisor or his privies, they go no further. It is now held that such deed is good against the grantor, and that it entitles the grantee to an action to recover the land, in the name of the grantor, but to his own use, even against the disseisor. Farnum v. Peterson, 111 Mass. 148; Wade v. Lindsey, 6 Metc. 407; Cleaveland v. Flagg, 4 Cush. 76." McMahon v. Bowe, 114 Mass. 140, 19 Am. Rep. 321. By executing and delivering the deed the grantor impliedly authorizes the grantee to use his name in an action to recover the land, and for that purpose the grantor is the real party in interest within the meaning of the statute requiring every action to be prosecuted in the name of the real party in interest. Steeple v. Downing, 60 Ind. 478.

Counsel for plaintiff urges that the necessity of the law under consideration has long since disappeared; that it has outlived its usefulness; and that it is "the duty of this court to hold that the law invoked by the appellant in this case shall not defeat what would unquestionably, in the absence of the statute, be a just and valid title." It is true the common-law doctrine and statutes declaratory thereof seem to be in increasing disfavor in a number of states, on account of the embarrassing restrictions placed upon the right of free alienation. See Kreuger v. Schultz, 6 N. D. 310, 70 N. W. 269. The

Digitized by Google

Legislature of South Dakota passed an act in 1899 (chapter 109, p. 144, of the Laws of 1899) which expressly authorizes transfers by persons out of possession, and gives to their grantees the same rights as are obtained by persons receiving conveyances from parties in possession. Similar abrogating statutes will be found in several other western states. The older states, notably New York and Massachusetts, firmly adhere to the common-law doctrine. Ohio, at an early date, repudiated it. The fact that this had been done, however, was deplored by Hitchcock, J., who wrote the opinion in Cressinger v. Lessee of Welch, 15 Ohio, 156, 45 Am. Dec. 565, in the following language: "I have no hesitation in saying that, in my opinion, the rule contended for by plaintiff's counsel would be beneficial, and highly conducive to the public interest. It would prevent the practice of purchasing doubtful titles. It might interfere with the interest of keensighted speculators, who make it a business to hunt up and purchase in such titles; but it could do no injury to the honest man. But, although such is my opinion, still, acting in a judicial capacity, I cannot consent to change the rule. Such change would interfere with a multitude of land titles heretofore acquired, and acquired, too, with a knowledge of the law as expounded by the court. But there is a body which can apply a remedy which shall operate hereafter. That body is the general assembly. And to me it is a matter of surprise that we have not an act upon our statute books declaring void sales made under the circumstances referred to by counsel in their second request to the court. But, until some statute of the kind is enacted, we feel ourselves bound by the law as heretofore settled." The common-law doctrine has existed in this jurisdiction since the organization of the territory. Whether it is wise or unwise is a question of public policy for the Legislature to determine. The power to abolish it rests with the Legislature, and not with the courts. So long as it remains the law of this state, it is the duty of the courts to give it effect.

Counsel also claims that the common-law doctrine, which admittedly was in force in this state prior to 1895, was abrogated by the adoption of the Revised Codes of 1895. This argument is based upon the fact that the Revised Codes wholly omit section 3303 of the Compiled Laws, which provided that: "Every grant of real property * * * is void, if at the time of the delivery thereof, such real property is in the actual possession of a person claiming under a title adverse to that of the grantor;" and also omit that portion of section 4870, Comp. Laws, which declared that a grantee of land under the void grant might maintain an action in the name of his grantor. These omissions did not affect the law as it theretofore existed. The provisions of section 3303 and that part of section 4870 which was omitted were merely legislative declarations of the common law as it existed independent of those provisions. As has been seen, where the common-law doctrine prevails—and concededly it was in force in this state—a grant, under the circumstances described in section 3303, is void. Further, its invalidity extends only to the adverse possessor, and the grantee may maintain an action in the name of the grantor. That authority existed independent of section 4870. It is patent, therefore, that the mere omission of these provisions was without effect or special significance. No abrogating statute has ever been enacted in this jurisdiction. On the contrary, sections 7001, 7002, and 7003 of the Penal Code, above referred to, were retained, and are still in force. Section 7002 makes it a misdemeanor for any person to convey any pretended title to lands, unless he or those under whom he claims have been in possession or have taken the rents and profits for one year before his conveyance. The deed upon which the plaintiff relies to establish his title was executed in violation of this section. It was, therefore, void, as contrary to the express provisions of the statute, and contrary to the policy of the law of this state as expressed in said section. See section 3920, Rev. Codes. Counsel says in his brief that this section "was overlooked by both the commissioners and the Legislature in revising the Code, and that the intent to repeal it existed, but it escaped by oversight," and asks us to give this alleged intent effect, and hold that the statute was in fact repealed. It is idle to speculate upon the undisclosed intention of the Legislature and of the code commissioners. The Code, as adopted, and the statutes as they exist, represent the legislative will, so far as we can take cognizance of it. As we have seen, the Revised Codes did not abrogate the common-law doctrine, but, on the contrary, perpetuated it.

It follows from what we have said that the plaintiff wholly failed to sustain his title. The district court is directed to vacate the judgment entered, and to enter a judgment dismissing this action. All concur.

BRYNJOLFSON v. OSTHUS et al.

(Supreme Court of North Dakota. May 5, 1908.)

CORPORATION — INSOLVENCY — RECEIVER — EFFECT OF APPOINTMENT—COLLATERAL ATTACK—NOTE—EVIDENCE OF OWNERSHIP—MORTGAGE—ASSIGNMENT.

1. The appointment of a receiver for an insolvent corporation has the legal effect of suspending its right to exercise its corporate functions, and thereafter the officers of such insolvent corporation are without authority to make valid transfers of the corporate assets.

2. Upon the appointment of a receiver for an insolvent corporation, the title and right of possession of its property pass by operation of law

to the receiver, as an officer of the court, for the use and benefit of its creditors.

3. An order appointing a receiver, made by a court having jurisdiction of the person and subject-matter, cannot be attacked collaterally.

4. The introduction in evidence by plaintiff of a negotiable promissory note, properly indorsed, establishes prima facie his ownership thereof.

5. In this state a transfer of a promissory note carries with it a mortgage securing it, and in an action to foreclose the mortgage the want of a formal written assignment of the mortgage will not defeat the foreclosure action.

6. In an action to foreclose a real estate mortgage securing a promissory note payable to the Bank of Minot, which said note was purchased by the plaintiff from the receiver of that corporation, and in which plaintiff's ownership of the note is placed in issue, it is *held* that the title of the note secured by said mortgage passed from said bank to the receiver upon his appointment, and, by a subsequent sale of the assets of the defunct corporation, to this plaintiff. *Held*, further, that a certain warranty deed of the land covered by the mortgage, executed by the president of the corporation before its insolvency, but delivered after its insolvency, did not operate as an equitable assignment of the mortgage, for the reason that, when the delivery of the deed occurred, the title to the note had already passed to the receiver, and for the further reason that at that time the president of the defunct bank had no authority to make such delivery.

(Syllabus by the Court.)

Appeal from District Court, Ramsey County; John F. Cowan, Judge.

Action by B. S. Brynjolfson against Andrew Osthus and others. Judgment for plaintiff. Defendants appeal. Affirmed.

M. H. Brennan, for appellants. Newman, Spalding & Stambaugh, for respondent.

YOUNG, C. J. This is an action to foreclose a mortgage upon 160 acres of land situated in Ramsey county. The mortgage was executed and delivered by Andrew Osthus to the Bank of Minot on January 25, 1888, and was given to secure his promissory note for $997, of even date therewith, payable to said bank, which said note, by its terms, became due on January 25, 1893. The plaintiff rests his claim of ownership of the note upon a purchase of all the assets of the Bank of Minot from the receiver. The complaint, in addition to the usual averments of a foreclosure complaint, avers that "the defendants, Andrew Osthus, Bank of Minot, A. B. Guptill as receiver of the Bank of Minot, Edgar Anderson, T. A. Luros, Hannah Luros, Ernest Anderson, Lorina Anderson and F. C. Sherman, have, or claim to have, some interest in or lien upon said mortgaged premises, or some part thereof, which interest or lien is subsequent and inferior to the interest or lien of plaintiff's said mortgage." The Bank of Minot, the original mortgagee, and F. C. Sherman, who appears to have owned the note in suit at one time, did not answer. It is alleged in the complaint, and admitted by the answers filed by the five contesting defendants, that no part of the principal or interest secured by the mortgage has been paid. The execution and delivery of the note and mortgage are also admitted. The contesting defendants deny that the plaintiff is the owner of the note, and claim that the title thereof, and of the mortgage securing it, passed from the Bank of Minot to Eliza V. Hoffman, and from her to the defendants Annie Anderson and Hannah Luros, through an equitable assignment. The trial court gave judgment in favor of plaintiff, as prayed for in his complaint. The five contesting defendants, above named, have appealed from the judgment, and demand a trial de novo in this court.

With the exceptions to be hereafter noted, the facts upon which the case turns are not in dispute, and may be stated as follows: On January 25, 1888, Andrew Osthus, who was then the owner of the land in question, gave the mortgage in suit to the Bank of Minot, and the same was duly recorded in Book I, page 12, of Mortgage Records of Ramsey County. On November 8, 1888, the Bank of Minot transferred the note to F. C. Sherman, and at the same time executed and delivered to him a purported assignment of the mortgage, in which no assignor was named. On February 8, 1892, the said F. C. Sherman transferred the note back to the Bank of Minot, and executed and delivered to it a purported assignment, in which the mortgage attempted to be assigned was described as being recorded in Book K of Mortgages, p. 276, 277, instead of in Book I, at page 12. Thereafter the Bank of Minot attempted to foreclose the mortgage, under the power of sale contained therein, by advertisement: and at the sale, on the 25th day of April, 1892, the land was struck off to said bank, and a sheriff's certificate issued to it, and on September 18, 1894, a sheriff's deed was issued on said sale to said bank. Subsequent to the sale, and prior to the issuance of the sheriff's deed, to wit, on June 7, 1893, the Bank of Minot became insolvent; and on the last-named date R. S. Lewis was appointed receiver thereof by the district court of Cass county in an action pending in that court. In December of that year, Lewis was succeeded by A. B. Guptill as receiver. In February, 1898, the district court of Cass county made an order authorizing the sale of the assets of the said insolvent bank, and on the 14th of that month all of the assets were sold to the plaintiff, and thereafter the sale was confirmed by the court. In September, 1898, the plaintiff in this action instituted an action in the district court of Ramsey county to recover the possession of the land covered by the mortgage, alleging that he was the owner thereof; resting his claim of title and right of possession upon a warranty deed executed and delivered to him by A. B. Guptill, the receiver. In that action Edgar Anderson, T. A. Luros, Hannah Luros, and Annie Anderson, who are, with the exception of Andrew Osthus, the sole contest-

¶ 3. See Corporations, vol. 12, Cent. Dig. § 2241.

Digitized by Google

ing defendants in this action, were made defendants. The trial court held that the foreclosure of the mortgage by the Bank of Minot was invalid, as well as the sheriff's certificate and sheriff's deed issued on said foreclosure sale, and that consequently the receiver of said bank had no title to the land to convey, and entered judgment dismissing the plaintiff's action. So far, therefore, as the four defendants who were parties to that action are concerned, the invalidity of that foreclosure is res judicata, and the mortgage must be held, as to them, to have had the status of an unforeclosed mortgage at the date when the Bank of Minot became insolvent and the receiver was appointed.

It is plaintiff's contention that the title and the right of possession of this note passed to the receiver from the bank upon his appointment, and that through the subsequent sale by the receiver to him he became the owner thereof. The defendants' contention is that the note and mortgage were not owned by the bank at the date of its insolvency, but that said bank, through its president, had transferred the same to Eliza V. Hoffman prior to the appointment of the receiver, and that thereafter the said Eliza V. Hoffman transferred the same to the defendants Annie Anderson and Hannah Luros. This contention of defendants rests upon the following facts: On April 22, 1893, which was prior to the appointment of a receiver, the bank of Minot, through its president, E. A. Mears, executed a warranty deed of the land in question, with the name of the grantee in blank. The evidence discloses that this deed thereafter came into the possession of Eliza V. Hoffman; that in 1897 she executed and delivered a quitclaim deed of the premises to the defendants Annie Anderson and Hannah Luros, for a consideration of $25, and at the same time the deed from the Bank of Minot, which had for some time prior thereto been in her possession, was also delivered to the defendants, and the name of Eliza V. Hoffman was inserted as grantee, and both deeds were placed of record.

It is undoubtedly true, as counsel for defendants contends, that a sale under a void foreclosure of a real estate mortgage has the effect of assigning the mortgage attempted to be foreclosed to the purchaser at the foreclosure sale. Salvage v. Haydock, 68 N. H. 484, 44 Atl. 696; Smithson Land Co. v. Brautigan, 16 Wash. 174, 47 Pac. 434; Anderson v. Minnesota Loan & Trust Co., 68 Minn. 491, 71 N. W. 665; Stillman v. Rosenberg (Iowa) 78 N. W. 913; Sawyers v. Baker, 77 Ala. 461; Johnson v. Sandhoff (Minn.) 14 N. W. 889; Rogers v. Benton (Minn.) 38 N. W. 765; Grosvenor v. Day, 1 Clarke, Ch. 109; Hoffman v. Harrington, 33 Mich. 392; Gilbert v. Cooley, Walk. Ch. (Mich.) 494; Stallings v. Thomas (Ark.) 18 S. W. 184. It is also true that the execution and delivery of a deed by the purchaser at the void foreclosure sale to a third person, according to a number of cases, has the effect of assigning the mortgage to the grantee. Whether the doctrine goes further, and sustains the view that all subsequent grantees acquire the ownership of the mortgage successively by virtue of their deeds—and that is this case—we need not discuss or determine. In this case it is entirely clear, we think, that Eliza V. Hoffman never was the owner of the note and mortgage in suit, by virtue of an equitable assignment, purchase, or otherwise. If she was not, then, of course, her deed to the defendants could not, in any event, operate as an equitable assignment of the note and mortgage. That she did not own the note and mortgage, and that she never acquired them under the alleged deed from the Bank of Minot, is, we think, entirely clear. The entire contention that they passed to her is based upon the fact that E. A. Mears, as president of the Bank of Minot, on April 22, 1893, which was before the appointment of a receiver, and at a time when the officers of the bank had control of its assets, and when it still had the right to exercise its corporate functions, executed the warranty deed which was delivered to the defendants in 1897, and in which the name of Eliza V. Hoffman was then inserted as grantee. We have no hesitation in concluding, under the undisputed evidence in this case, that this deed never became operative for any purpose whatever, for the reason that it was not delivered by the grantor, the Bank of Minot, and therefore did not become effective. The only evidence as to the delivery of the deed is given by Eliza V. Hoffman, the alleged grantee. Her testimony is to the effect that the Mortgage, Bank & Investment Company, a corporation operated by E. A. Mears, owed her the sum of $400. Prior to the insolvency of the Bank of Minot, W. B. Mears, who was connected with that corporation, delivered to her a number of crop contracts to secure said indebtedness. Her testimony is that this deed was not among the papers so delivered, and that it was not delivered to her prior to the appointment of the receiver; that, after the appointment of the receiver, E. A. Mears delivered to her a bundle of papers, which she deposited in the bank for safe-keeping; that this deed might have been among these papers. Her first positive knowledge that it was in her possession was in 1897, which was four years subsequent to the appointment of a receiver. Her testimony is positive that she did not receive it prior to the receivership. It should require no argument to show that the delivery of the deed to her by E. A. Mears subsequent to the appointment of a receiver was of no effect. The Bank of Minot, the grantor, was then in the hands of a receiver, and its officers were stripped of authority to make a delivery, and not only did the appointment of a receiver deprive the officers of the bank of the power

Digitized by Google

to do any further acts which would affect the corporation or its property, but it had the further effect of transferring the title and right of possession of all the property of the bank to the receiver. The appointment of a receiver of an insolvent corporation operates as a suspension of its corporate functions, and of all authority over its property and effects. High on Receivers (3d Ed.) § 290; Linville v. Hadden (Md.) 41 Atl. 1097, 43 L. R. A. 222. Further, the title and right of possession of all property of the insolvent corporation, both real and personal, passed to the receiver, as the officer of the court appointing him, for the use and benefit of the creditors of the insolvent. Section 5406, Rev. Codes; Atty. Gen. v. Ins. Co., 100 N. Y. 279, 3 N. E. 193; Morgan v. R. Co., 10 Paige, 290, 40 Am. Dec. 244; Atty. Gen. v. Ins. Co., 28 Hun, 360, affirmed in 93 N. Y. 630; Receivers of Corporations (Gluck & Becker) c. 1, § 5; Osgood v. Maguire, 61 N. Y. 524; High on Receivers, § 136. It follows from what we have said that the note and mortgage, which the evidence shows were owned by the Bank of Minot, were not transferred to Eliza V. Hoffman by the Mears deed, but that they did in fact pass by operation of law to the receiver, Lewis, and that plaintiff became, and now is, the owner thereof, under his purchase from Guptill, Lewis' successor in the receirership.

The defendants also urge in this court that the plaintiff has not established the assignment of the mortgage to him by the receiver by competent proof. The original assignment was not introduced in evidence. The plaintiff relied entirely upon the record of the assignment, which was introduced over defendants' objection that it was not the best evidence, and that no foundation had been laid for its introduction. Whether secondary evidence was admissible, under chapter 145, p. 189, Laws 1901, we need not determine. The plaintiff established by competent evidence the purchase of all the assets of the bank from the receiver, and the approval of the sale by the court, and, as we have seen, this note constituted a part of the assets. The note was delivered by the plaintiff to his attorneys in 1899, and was offered in evidence by them. F. C. Sherman, who at one time owned the note, was made defendant, and made default; and this is true also of the Bank of Minot, the original payee. Its possession and production in evidence was prima facie evidence of the plaintiff's title and ownership. Section 812, Daniel on Neg. Instruments, and cases cited. No evidence whatever was offered to overcome this prima facie showing. It was entirely unnecessary to prove a formal written assignment of the mortgage. Plaintiff was entitled to maintain the present foreclosure action, even without a formal written assignment. The mortgage was merely an incident of the debt, and followed it. The rule stated by Wiltsie on Mortgage Foreclosure, at section 347, is that "in those states where the transfer of a note carries with it the security collateral thereto, in an action by an assignee to foreclose the mortgage securing a note transferred to him, the defendant cannot set up as a defense the want of a formal assignment of the mortgage." Jackson v. Blodget, 5 Cow. 202, 205; Jackson v. Willard, 4 Johns. 41, 43; Rice v. Cribb, 12 Wis. 179.

It was suggested by defendants' counsel on oral argument that inasmuch as the defendant Andrew Osthus was not a party to the former action, in which the foreclosure by the Bank of Minot was adjudged void, he is not bound by that judgment, and that he can therefore insist in this action that the former foreclosure was valid, and that the note secured by this mortgage was in fact paid by that foreclosure. It must be admitted that the defendant is not concluded by that judgment, and that this defense was available to him, had he elected to interpose it. He has not done so, however. It is not pleaded. Neither has the defendant Osthus brought into the record any evidence from which we could, even if this defense were pleaded, judicially determine that the former foreclosure was valid. The pleadings do not present this issue. The complaint alleges that the former foreclosure sale was adjudged void. Osthus' answer specifically admits this allegation, and nowhere in his answer does he allege that the debt secured by the mortgage in suit was discharged by payment, foreclosure, or otherwise. On the contrary, he rests his defense upon a denial of plaintiff's ownership of the note. There is therefore no foundation either in the pleadings or in the evidence upon which to rest defendants' contention that the former foreclosure was in fact valid and satisfied the note in suit.

The defendants also attack the plaintiff's ownership of the note, by claiming that the entire receivership proceedings through which the plaintiff obtained title to the note were void, for the reason, as they allege, that the action wherein the receiver was appointed was collusive. This question is not before us. The jurisdiction of the court which appointed the receiver to make the appointment and to order and confirm the sale of the assets is not, and cannot be, challenged. The court had jurisdiction of the persons and the subject-matter, and the validity of its orders in the receivership proceedings, including the order appointing the receiver, authorizing the sale of the assets, and approval of the same, cannot be attacked in this collateral way. High on Rec. § 39a; 1 Black on Judg. §§ 245–246, and cases cited.

The defendants T. A. Luros and Edgar Anderson also relied in the district court upon a tax deed issued to them by the county auditor of Ramsey county on July 13, 1894. This deed was held void by the trial court, and the appellants do not contend in this court that the trial court erred in this par-

Digitized by Google

ticular, so that it need not be further referred to.

For the reasons stated, we have reached the conclusion that the judgment rendered and entered by the district court should in all things be affirmed, and it is so ordered. All concur.

McLEOD et al. v. LINCOLN MEDICAL COLLEGE OF COTNER UNIVERSITY et al.

(Supreme Court of Nebraska. July 8, 1903.)

CORPORATIONS—CHARACTER — EDUCATIONAL INSTITUTE—POWERS—SALE OF ASSETS.

1. The character of a corporation is determined from its articles of incorporation and the statute authorizing its formation.

2. The fact that an educational institution may acquire and convey property necessary to the accomplishment of its object, and may charge tuition for instruction, does not render it an incorporation for the pecuniary benefit of its members.

3. Evidence examined, and *held* sufficient to sustain the judgment of the trial court.

(Syllabus by the Court.)

Commissioners' Opinion. Department No. 1. Appeal from District Court, Lancaster County; Frost, Judge.

Action by Julius M. McLeod and others against the Lincoln Medical College of Cotner University and others. Judgment for defendants, and plaintiffs appeal. Affirmed.

C. S. Rainbolt, Norval Bros., and Mockett & Polk, for appellants. Tibbets Bros., Morey & Anderson, and Robert Ryan, for appellees.

OLDHAM, C. The Lincoln Medical College of Cotner University was organized and incorporated in 1896 under the provisions of section 15, c. 16, Comp. St. 1901. The object of the corporation set forth in its articles was to "carry on the medical department of Cotner University in the city of Lincoln, Lancaster county, Nebraska, and to establish schools of dentistry and pharmacy in connection therewith." The organization had a theoretical capital stock of $50,000, of which $5,000 was treated as having been fully paid at the time of the incorporation of the school. It appears, however, from the testimony contained in the bill of exceptions, that the school was incorporated by a number of physicians, who were allied with the school of medicine known as the "eclectic school"; that, as a matter of fact, no part of the capital stock was actually paid up at the time the articles of incorporation were filed, but that each of the incorporators and stockholders of the institution undertook and agreed to lecture and give instruction to the students of the school at the rate of $6 per hour, $1 of which was to be paid in cash and $5 in stock. The dollar that was to be paid in cash was procured by delivering scholarships of the value of $125 to each instructor when he had earned that amount, and permitting him to sell the same to the students. Consequently, under this arrangement, the amount of the capital stock owned by each of the faculty of the institution stood for so many hours' service as lecturer and instructor in the institution at the rate of $5 per hour. The affairs of the institution were conducted in this manner until 1901, at which time three of the instructors and stockholders of the institution seem to have apostatized from some doctrinal points of the faith taught by the eclectic school of medicine, and to have become impregnated with certain heretical theories taught by the allopathic or regular school. This caused trouble and dissension in the faculty, and as the result two or three of the professors were dropped from the roll of instructors. The dissension increased after this until August, 1901, when by a three-fourths vote of the board of directors of the incorporation it was dissolved. In the meantime the Lincoln Medical College, a new corporation, was formed under the same provisions of the statute, and for the same purpose as that of the original corporation. This corporation was composed of all the members and officers of the original corporation, except the three dissenters. When the original association was dissolved, a committee was appointed by the board of directors to appraise and value the tangible assets and good will of the defunct corporation. This they did, and valued the tangible assets at about $1,400, and the good will at $500, and by a unanimous vote of the board of directors transferred these assets to the new corporation, which also assumed and agreed to give instruction to the students owning scholarships purchased from the old institution. The new corporation entered into a contract with Cotner University to continue its course of instruction as an adjunct to that institution, and opened its school at the usual time in the year 1901. Thereafter the plaintiffs, two of the stockholders of the original corporation, instituted this action against the new corporation and its officers and stockholders, alleging that the transfer of the assets and good will of the original corporation were fraudulently made by a majority of the officers and agents of such corporation to the new corporation, of which they themselves were the stockholders and persons beneficially interested, and that such transfer was made for an inadequate consideration, and for the fraudulent purpose of excluding these plaintiffs from participating in the affairs of the corporation, and for the purpose of destroying the value of the stock held by them. They asked that the sale from the original corporation to the new corporation be set aside, that a receiver be appointed to sell the tangible assets and good will of the original corporation, and that the new corporation be enjoined and restrained from proceeding to give instruction in Cotner University under the name of the Lincoln Medical College. Defendant Reynolds, another minority stockholder of the origi-

Digitized by Google

corporation, filed a cross-petition, alleging substantially the same matters set up in plaintiffs' petition, and joined in their prayer for relief. The defendant the Lincoln Medical College, and the individual stockholders and faculty thereof, filed answers, alleging that the transfer from the original corporation to the new corporation was made in good faith, for a valuable consideration, by a three-fourths vote of the board of directors of the original corporation; that such transfer was necessitated because of a conspiracy entered into by plaintiffs and cross-petitioner, Reynolds, for the purpose of defeating the object for which the original corporation was instituted. Twenty-one students of the institution, who had purchased scholarships from the original corporation, filed a cross-petition on their own behalf and on behalf of 40 others similarly situated, alleging that they had purchased scholarships which entitled them to a four-years course of instruction while the plaintiffs and cross-petitioner, Reynolds, were stockholders of the original corporation, and that the new corporation was performing the conditions of the contract entered into by the old corporation with them, and giving them proper and orthodox instruction, and also alleging that it would work an irreparable injury upon them if plaintiffs' petition were granted, and the Lincoln Medical College was restrained from giving them further instruction. On issues thus joined the trial court found the transfer from the old to the new corporation was made in perfect good faith, and for an adequate consideration, and dismissed the petition of plaintiffs and of cross-petitioner, Reynolds, and from this order and judgment an appeal is taken to this court.

The character of a corporation is determined from its articles of incorporation and the statute authorizing its formation. In this case it is apparent from both the articles of incorporation and the provisions of section 15, c. 16, supra, that this organization is an educational, and not a "business" or "trading corporation" for the pecuniary profit of its members. While incorporated educational institutions may be authorized to hold all kinds of property acquired by purchase, donation, devise, or otherwise, and to convey the same at their pleasure, they may only do this for the purpose of accomplishing the legitimate ends of the corporation, and the fact that such an institution may charge tuition for instruction does not change its nature, and make it an incorporation for pecuniary benefit. 1 Clark & Marshall, Private Corporations, p. 84; Santa Clara Academy v. Sullivan, 116 Ill. 375, 6 N. E. 183, 56 Am. Rep. 776. It would, therefore, follow that the transfer of the assets from the old to the new corporation in the instant case, and also the change of the name of the school, was not a departure in any sense from the original intent and purpose of the old organization. In fact, the power to make such a change, when done in good faith, is anticipated and authorized by section 172, c. 16, Comp. St. 1901.

An examination of the testimony of the physicians and instructors connected with each of the institutions, as well as a comparison of the articles of incorporation of each, show that the new is but a reincarnation of the old; the only change being that extra precautions have been taken in the by-laws of the new to protect its faculty from the invasion of the schismatics and heretics to its established medical faith. No question is raised in this case as to the rights of plaintiffs to exchange their proportionate share of stock in the original corporation for a like share of capital stock of the new organization. They have not asked for the enforcement of this right, if it does exist. It is virtually conceded that the tangible property of the old institution was sold to the new for its actual cash value. The only contention is that the good will of the old institution should have brought a greater price than $500. Without determining whether or not the good will of a corporation of this character should be treated as a commercial asset, it is sufficient to say that all the testimony showed that the institution had been run at a loss to its incorporators and stockholders, with the exception of such benefit as they received from their association and investigation of scientific questions in connection with their students. Hence, if the good will of this institution was treated as an asset, its commercial value would have to be indicated by a minus quantity.

From a careful examination of the entire record, we are fully satisfied with the judgment and findings of the learned trial court, and we therefore recommend that the judgment be affirmed.

AMES and HASTINGS, CC., concur.

PER CURIAM. For the reasons stated in the foregoing opinion, the judgment of the district court is affirmed.

VAN SYOC v. STATE.

(Supreme Court of Nebraska. July 3, 1903.)

CRIMINAL LAW — VARIANCE — PRELIMINARY EXAMINATION — LARCENY — EVIDENCE — INSTRUCTIONS—DEPUTY SHERIFF — DISQUALIFICATION.

1. When it appears that the charge in the complaint is substantially the same as that set forth in the information, a plea of a want of a preliminary examination, or a variance between the complaint and the information, is unavailing. Hockenberger v. State, 68 N. W. 1037, 49 Neb. 707.

2. An information charging a person with larceny cannot be said to be bad for duplicity or uncertainty because, after alleging the felonious taking of the property charged to have been stolen, it is specifically alleged that such felonious taking was "with the intent to unlawfully and feloniously convert the same to

his own use against the will of the said Jesse W. McNeil" (the owner).

3. The fact that property alleged to have been stolen was taken without the consent of the owner may be inferred from circumstances shown in evidence, as well as by direct testimony that none was given.

4. An instruction which, in substance, advises the jury that the presumption of innocence remains with the accused till by competent evidence the state establishes guilt beyond a reasonable doubt, is not subject to the objection that the burden of proof is thereby shifted to the defendant.

5. Rulings of the trial court on certain instructions given and refused examined, and found without prejudicial error.

6. Testimony admitted over objections on the ground of being too remote held properly admitted.

7. A deputy sheriff was a material witness for the state in a criminal prosecution for larceny. He also had charge of the jury during its deliberations. *Held*, that the fact of his having been called as a witness would not of itself disqualify him from serving in the latter mentioned capacity.

8. Evidence examined, and *held* sufficient to support a verdict of guilty, as found by the jury.

(Syllabus by the Court.)

Error to District Court, Kearney County; Adams, Judge.

Alfred Van Syoc was convicted of larceny, and brings error. Affirmed.

Hague & Anderbery, for plaintiff in error. F. N. Prout, Atty. Gen., Norris Brown, Dep. Atty. Gen., and Lewis C. Paulson, for the State.

HOLCOMB, J. The defendant was tried for and adjudged guilty of the larceny of money of the value of $50. By these proceedings he seeks to reverse the judgment pronounced against him, and one of the errors assigned is that the court should have sustained his plea in abatement on the ground that he was given no preliminary examination on the charge of which he was found guilty. This contention is based solely on the fact, as disclosed by the record, that the information in the district court sets forth with more fullness and specifically by the use of additional verbiage some of the elements of the crime charged. It does not appear that a different offense was charged, nor can it be said that no crime was charged in the complaint on which the preliminary hearing was based. The complaint filed before the examining magistrate charged that the defendant "then and there did then and there unlawfully and feloniously take, steal, and carry away a certain sum of money, to wit, the sum of $75, being lawful money of the United States, and of the value of $75, being the property of Jesse W. McNeil; the said money being in bills of denominations unknown to affiant," etc. The information on which defendant was tried and to which the plea of abatement was interposed contains the identical language quoted, and added thereto, after the word affiant, the following: "Then and there, with the intent to unlawfully and feloniously convert the same to his own use, against the will of the said Jesse W. McNeil." It cannot be doubted that the complaint on which the preliminary hearing was based charged not only substantially, but almost in the identical language, the same crime for which the defendant was tried in the district court. The filing of the complaint and the hearings had thereunder appear to have been in strict compliance with the statute regarding preliminary examinations of persons accused of crime before they are proceeded against by information in the district court. Cowan v. State, 22 Neb. 519, 35 N. W. 405; Hockenberger v. State, 49 Neb. 706, 68 N. W. 1037. The complaint before the examining magistrate charged the crime substantially in the language of the statute, and disclosed all essential facts necessary to constitute the crime of which the defendant was accused, and cannot be said to be so defective as even to require an amendment; and for stronger reasons it cannot be said to charge no crime at all, or one different from that for which the accused was tried. Martin v. State (Neb.) 93 N. W. 161; Rema v. State, 52 Neb. 375, 72 N. W. 474; Chezem v. State, 56 Neb. 497, 76 N. W. 1056. The plea in abatement was properly overruled.

In this connection it is further contended that a motion to quash and a demurrer to the information which were interposed in the district court should have been sustained because of the alleged duplicity in the information by reason of the added allegation in charging the crime in the district court, which we have quoted. All that was done by the change adverted to was, as has been said, to state with more fullness and specifically the essential ingredients constituting the crime; that is, the unlawful and criminal intent of the taker of the property alleged to have been stolen to permanently deprive the owner of his property against his will, and convert it to the use of the taker. But one offense is charged in the information, and in the charging there is no such uncertainty or duplicity as to render the information vulnerable to a motion to quash or to a demurrer, and no error was committed in overruling each of the pleas thus interposed.

An instruction was given the jury which was excepted to on the ground that it permitted the finding of nonconsent on the part of the owner to the taking of the property alleged to have been stolen from circumstances shown in evidence, and not by any direct proof. The instruction was proper. The owner, it was shown, was at the time lying on his death bed, and wholly unconscious of what was passing around him. As was said in Weigrefe v. State (Neb.) 92 N. W. 161: "All the circumstances surrounding the alleged larceny were inconsistent with a taking with the consent of the owners, and

¶ 3. See Larceny, vol. 32, Cent. Dig. § 153.

Digitized by Google

want of consent may be inferred from circumstances shown in evidence as well as by direct testimony that none was given." See, also, Rema v. State, supra.

An instruction which told the jury in substance that the burden of proving the defendant's guilt beyond a reasonable doubt rested upon the state throughout the entire trial, and that the presumption of innocence should be indulged in at all times during the deliberations of the jury unless overcome by competent evidence on the part of the state to satisfy them beyond a reasonable doubt of the defendant's guilt is excepted to because, as alleged, it results in a shifting of the burden of proof. The position is untenable. The instruction does nothing more than to advise the jury that the presumption of innocence remains with the accused till by competent evidence the state establishes his guilt beyond a reasonable doubt.

Some other instructions are excepted to because of the giving or refusing to give the same. An examination of the rulings complained of satisfies us that no prejudicial error is disclosed by the record relative thereto.

One witness was permitted to testify over objections that on Thursday or Friday preceding the Sunday night when it was alleged the offense was committed he had given to the person from whom the larceny was committed $20 or $25 in bills, and that the owner had, at the time, $40 or $50 in bills in addition thereto, all of which were placed in a pocket memorandum book belonging to the owner, and in which he kept his money. The evidence was offered for the purpose of proving the amount of money in the possession of the owner which was alleged to have been stolen, and was objected to as too remote. The circumstances shown in evidence as to the movements of the owner after the incident testified to, and the nearness in time between the two transactions, satisfies us that the evidence was admissible, and that the court properly overruled the objection on the ground stated.

Because a deputy sheriff, who had charge of the jury during their deliberations, had also been a material witness on behalf of the prosecution, it is claimed that this situation resulted in prejudice to the substantial rights of the defendant. This contention, if we understand counsel, is upon the theory that the officer was not, because of his having been a witness for the state, wholly disinterested, and was not a proper person to have charge of the jury, and that the jury may have been subjected to baneful influences interfering with a free and untrammeled deliberation of the evidence in the case. There is no charge, and no evidence to support a charge, of any actual misconduct by the officer who had charge of the jury, or of any prejudice to the defendant by reason thereof. Such being true, it cannot be said that the verdict is vitiated, or that there has been a miscarriage of justice, by reason of the fact that the officer having charge of the jury during its deliberations was a material witness for the prosecution. State v. Wart, 51 Iowa, 589, 2 N. W. 405; State v. Bailey, 32 Kan. 84, 3 Pac. 769; Jenkins v. State, 41 Tex. 128; Ned v. State, 33 Miss. 364; Gainey v. People, 97 Ill. 270, 37 Am. Rep. 109.

Lastly, it is contended that the evidence is insufficient to prove the crime charged. We are of the opinion the verdict of the jury cannot rightfully be interfered with on the ground that it is unsupported by the evidence. While there is no positive evidence that the money found in the possession of the accused soon after the alleged commission of the crime was the identical money belonging to and in possession of the owner immediately prior thereto, the circumstances, and there are many of an incriminating character, all tend to prove that the owner did possess the money in currency and bank bills of the amount testified to by one or more witnesses; that he kept it in a memorandum pocketbook found in the possession of the accused; that the accused had no money, or but a small amount, prior to the alleged theft; and that his explanations as to how he came in possession of the money found on his person soon after, and how he became possessed of the owner's pocketbook, were so unsatisfactory, and at variance with other credible testimony, as to warrant rejection by the jury, and justify the conclusion which they evidently reached. The evidence, we think, warrants a finding that the defendant, while attending the owner in his last sickness, and when none others were present, abstracted the pocketbook and the money in it from the pocket of his coat, which was hanging on the wall of the room in which he was lying at the time, and that the book contained the amount of money the accused was found guilty of stealing, and that the money found on his person at the time of his arrest was in fact a part of the money he was charged with having stolen.

The evidence is sufficient to support the verdict, and, there appearing no error in the record of the trial, the judgment of conviction should be, and accordingly is, affirmed.

BAUER et al. v. TAYLOR.

(Supreme Court of Nebraska. July 3, 1903.)

ACTION FOR RENT—RECOUPMENT BY TENANT —EVIDENCE.

1. A lessee who has been induced by the fraudulent representations of the lessor to enter into a lease may, in an action by the landlord for rent, recoup the amount of the damages suffered by him by reason of the fraud.

2. Where a written contract made the basis of an action is impeached by proper pleadings on the ground that it was procured by the fraud of the plaintiff, evidence is admissible in support of the fraudulent representations alleged.

¶ 1. See Landlord and Tenant, vol. 32, Cent. Dig. § 888.

Digitized by Google

3. Fraud must be specifically alleged and the fraudulent motive charged in the answer; otherwise the answer will be insufficient to lay the basis for the introduction of testimony.
4. Rulings of the trial court upon the exclusion of testimony examined, and *held* not error.

Commissioners' Opinion. Department No. 1. Error to District Court, Douglas County; Estelle, Judge.

"Not to be officially reported."

Action by Richard Taylor against Henry L. Bauer and others. Judgment for plaintiff, and defendants bring error. Affirmed.

B. N. Robertson, for plaintiffs in error. W. A. Saunders, for defendant in error.

KIRKPATRICK, C. This is an error proceeding brought by Henry L. Bauer and Perry, Bauer & Ennis, a copartnership, to obtain a reversal of a judgment of the district court of Douglas county rendered against them and in favor of Richard Taylor, defendant in error. The action was brought to recover rent alleged to be due and unpaid for the period of three months upon a lease given upon certain premises situated in the city of Philadelphia, Pa. The petition alleged the execution of the lease by plaintiffs in error, by the terms of which they agreed to pay as rent for the premises the sum of $50 per month, payable in advance; that the rent for three months remained unpaid and was due. A copy of the lease was attached to and made part of the petition. The material portions of the answer are in the language following: "Defendants aver that prior to the signing of the said lease the said plaintiff falsely represented to these defendants that the premises described in the said written lease were in good condition, and were in a condition suitable, fit, and proper for carrying on the business of dealing in butter, eggs, and provisions, and in the preparation of butter and other like provisions for the market, and also represented to the defendants that the residence portion of said premises was in good condition to afford tenantable, habitable, comfortable, and safe living apartments for the said defendant Bauer and family, and the defendants relied upon the said representations of the plaintiff in negotiating for the lease upon said premises. Defendants further aver that at the time they signed said lease the said plaintiff orally again assured the defendants that the said representations as to the premises being in good condition were true in all respects, and at the time, and in consideration of the signing of said lease, then and there verbally promised and agreed with the defendants that if there were any defects in said premises, or in its equipment or appurtenances, he, the said plaintiff, would remove such defects immediately, and place said premises in good condition, and suitable and fit for the purpose for which the defendants desired to use them. Defendants allege that the said representations so made to the defendants were false, and that the plaintiff failed, neglected, and refused to carry out and perform his said agreement to place said premises in repair and remove the defects existing therein at the time of the signing of said lease. Defendants aver that the only means of heating the said premises was by a furnace located in the basement of the building, and the pipes in said furnace were so defectively arranged that no heat could be conveyed from said furnace to the working room, or room where the butter and other provisions were prepared for the market, and without heat in said room it was impossible for the defendants to use the room. Said furnace was also defective in that it was worn out and in a dilapidated condition. It had neither grate nor linings, and it would not heat either the business portion of the premises to make them fit to carry on business, nor the residence portion of the premises to make that part fit and safe for the family to live in; and, when fire was lighted in said furnace, coal gas constantly escaped therefrom, filling the entire premises, and especially the residence portion thereof, to such an extent as to render the place dangerous to life. That the range in the kitchen was broken down and would not work; the back portion of the residence was in a dilapidated condition, and was unsafe for a person to go upon. Defendants aver that shortly after signing the said lease they pointed out to plaintiff the defects in said premises, and the dangerous condition thereof, and requested him to remove the defects and repair the premises, so as to render them suitable for business and safe and comfortable for habitation; that plaintiff again and at several times thereafter promised to carry out the said agreement as aforesaid, but never did so." The lease contains no representations or warranties as to the tenantable condition of the premises demised, and no provisions requiring the landlord to repair. It is disclosed by the evidence that plaintiffs in error occupied the premises for a period of three months, and paid the rent for the portion of time occupied in accordance with the terms of the lease; that they then vacated the premises; and this action is for the purpose of recovering the rent for the last three months of the lease term, during which the premises remained unoccupied. The trial court excluded practically all of the evidence offered by plaintiffs in error, and instructed the jury to bring in a verdict for defendant in error for the amount claimed in the petition. The errors urged are the exclusion of this evidence and the peremptory direction to the jury.

By witnesses, plaintiffs in error offered to prove: That Henry L. Bauer, acting for himself and the other plaintiffs in error, carried on the negotiations leading up to the execution of the lease. That the premises consisted of a three-sto

Digitized by Google

building, with storeroom below; the two upper stories being constructed as a flat for residence purposes. That the lower story had a partition extending across it; the front part to be used as a storeroom, and the back part as a workroom. That it was to be used to carry on the butter, egg, and produce business. That the agent, as an inducement to the execution of the lease, falsely represented that the building was in all respects suitable for the purpose contemplated; that the upper stories were in all respects suitable and desirable for residence purposes; that the building was heated by means of a hot-air furnace situated in the cellar, which furnace was in good condition and suitable for the purpose intended; that the furnace would furnish the necessary heat for carrying on the business of making and preparing butter for the market; that it furnished sufficient heat to make the two upper stories habitable and comfortable as a residence. That all of these representations were relied upon by plaintiffs in error and were false. That the furnace was worn out and worthless. That it would furnish no heat for the workroom or the living rooms. That, when an attempt was made to use the furnace, it allowed coal gas to escape into the living rooms to such an extent that Bauer and other members of his family were made sick and confined to their beds. That the living rooms could not be heated, and were wholly uninhabitable. That defendant in error had further represented and agreed that, if there were discovered any defects in the premises which interfered with the comfortable use and enjoyment, upon notice he would immediately make repairs and remedy the defects found to exist. That plaintiffs in error immediately notified him of the condition of the premises, and that they were unsuitable. That, on the occasion of each payment of rent, defendant in error was notified of the condition of the premises, and that the members of the Bauer family were made sick by the condition of the building, and that plaintiffs in error would be obliged to vacate the building unless the defects complained of were remedied. And that defendant in error repeatedly promised and agreed to make the repairs, but failed to do so, in consequence of which failure plaintiffs in error vacated the premises. The evidence further discloses that plaintiff in error Bauer went upon the premises, but at the time he went into the cellar it was so dark that he could not make a thorough examination. It is also disclosed that defendant in error did make some repairs, expending the sum of $10 in repairing the furnace; but it appears that the furnace was old and worn out, and could not be put in repair. All of this testimony was rejected by the trial court, apparently upon the theory that it was an attempt to vary the terms of a written lease by parol.

Defendant in error relies upon the rule that, all prior or contemporaneous negotiations being merged in the written inst ment, plaintiffs in error cannot be permit to introduce evidence tending to vary, mo fy, or contradict the writing. It is also c tended that the rule is firmly and universa established that, in the absence of any sti lation in the lease to that effect, the landl will not be required to make necessary pairs. Many cases are cited to support b of these propositions, and they may be mitted to be sound, the question being as their applicability to the issues presented the pleadings in the case at bar. Counsel plaintiffs in error, in reply brief, seeks distinguish the cases cited in support of rules invoked by defendant in error; and, we understand his contention, it is th where the lessee has been induced by fra to enter into the contract, the fraud will g a right of rescission to the lessee, if su right has not been waived, and that if, reason of the fraud, the lessee has been duced to move upon the premises, he m upon discovery of the fraud, move out aga and set up the fraud as a defense to lessor's action for rent. We are inclined the view, sustainable upon authority, that the lease was procured by fraud of lessor, the lessee may rescind upon disc ery of the fraud. He may abandon the pre ises, and decline to pay the rent cover the unexpired lease period. This is not contradiction of the rule inhibiting the va tion or modification of a written agreeme Where the defense interposed challenges validity of the writing, it is, we think, mentary that there is no estoppel. Wolfe Arott, 109 Pa. 473, 1 Atl. 333; Pryor v. F ter (Super. Buff.) 1 N. Y. Supp. 774; Id. Y.) 29 N. E. 123; Barr v. Kimball, 43 N 766, 62 N. W. 196. The cases cited by pla tiffs in error go to sustain this rule. Pr v. Foster holds that a tenant induced to le premises by reason of the false represen tions of the landlord as to the heating pacity of a furnace does not, by payment the rent, waive the right to sue for damag In Wolfe v. Arott an affidavit of defense a claim for rent, setting forth that the la lord falsely represented the sanitary con tion of the dwelling house to be good, w held to be a good defense. In Myers v. R enback (City Ct. N. Y.) 25 N. Y. Supp. 5 the defendant, in an action on the lea pleaded that he was induced to sign lease by the false and fraudulent represen tions of the plaintiff that the building w fit for the purpose for which defendant wi ed to use it, and that the plaintiff knew the time that they were false, and that was there held that evidence of the conv sations and representations made which w the inducing cause were admissible. think the cases cited sufficiently distingu a case of fraudulent representations induc the signing of a lease from a case in wh the lessee seeks to fasten upon the landl the cost of necessary repairs where he

Digitized by Google

failed to secure the insertion in the lease of a provision requiring the landlord to make the repairs. In the latter case, we do not doubt that if, because of the active fraud of the landlord, the written lease failed to show the actual agreement that the landlord should make the repairs, the lessee, having properly pleaded such fraud, would be permitted to recoup his damages, or, if forced to remove because of the failure to repair, would be entitled to defend an action for rent upon that ground. However, in the absence of any pleading of fraud, it is very manifest that the rule which excludes evidence to contradict the writing is applicable, and the lease must then be permitted to speak alone. Cleves v. Willoughby, 7 Hill, 83; Reeves v. McComeskey (Pa.) 32 Atl. 96.

In view of what has been said, does the answer quoted state a defense? We have already concluded that fraud in procuring the lease is a sufficient defense, but the sufficiency of the defense must be tested, not by what plaintiffs in error offered to prove, but by their answer. The question before the trial court being whether the evidence offered was admissible under the issues joined by the pleadings, the same question is all that we can now consider. Originally the rule adhered to, both in England and in some of the states of our own country, was that fraud consisted in making a representation of fact which was in reality untrue, and upon which the other party relied to his damage; his liability not depending upon his knowledge or ignorance of its falsity. But at this day it is clear that the contrary is the rule. That which makes a false representation fraudulent in law is the guilty knowledge—the intent to procure an advantage over the other party by deliberately or carelessly placing him under a misapprehension of the facts. It is the guilty knowledge which is inseparable from the intent to deceive. Untrue representations, honestly made, do not constitute fraud at law. Wakeman v. Dailey, 52 N. Y. 27, 10 Am. Rep. 551; Marsh v. Falker, 40 N. Y. 562, 566. And if the scienter is a part of the defense, and an essential part, it would seem to follow that no defense is stated unless the scienter is pleaded. This court, in Foley v. Holtry, 43 Neb. 137, 61 N. W. 120, has already stated the law with sufficient clearness and completeness; and in that case it is said that it must be alleged and proved what representations were made, that they were false, that they were believed and relied upon by the other party, and that he was injured; and in the opinion it is added: "To these requirements the courts formerly added another, to wit, that defendant must have known the representations were false. A more accurate statement, in view of the later decisions, would be that the defendant must either know that the representations were false, or else they must be made, without knowledge, as positive statements of known facts." All of the evidence sought to be introduced by plaintiffs in error would, in the absence of any fraudulent conduct of the lessor at the time of the signing of the lease, be inadmissible. There is no such knowledge on the part of the lessor of the falsity of the representations—no fraudulent intent—charged in the answer. Barr v. Kimball, supra, relied on by plaintiffs in error, is distinguishable from the case at bar. The answer in that case distinctly charged that the false representations upon which the defendants relied to their injury were known to be false by the plaintiff; and the decision is placed upon the ground that the evidence was sufficient to support the finding that the representations were false, "and known to be so when made by the party making them." We conclude, therefore, that the answer was insufficient to admit the evidence tendered, and such evidence was properly excluded. In its absence, there is no question made as to the propriety of directing a verdict for plaintiff in the court below.

It is therefore recommended that the judgment of the trial court be affirmed.

DUFFIE and POUND, CC., concur.

PER CURIAM. The conclusions reached by the Commissioners are approved, and, it appearing that the adoption of the recommendations made will result in a right decision of the cause, it is ordered that the judgment of the district court be affirmed.

PORTER v. DETRICK.

(Supreme Court of Nebraska. Nov. 20, 1901.)

ERROR—BILL OF EXCEPTIONS—AUTHENTICATION.

1. Where the bill of exceptions is not authenticated by a proper certificate of the clerk, this court can go no further than to see that the judgment appealed from is supported by the pleadings in the case.

Commissioners' Opinion. Department No. 3. Error to District Court, Kearney County; Beall, Judge.

"Not to be officially reported."

Action by Merrick S. Porter against Hiram Detrick. Judgment for defendant, and plaintiff brings error. Affirmed.

E. C. Dailey, for plaintiff in error. Ed. L. Adams, for defendant in error.

DUFFIE, C. The bill of exceptions in this case is not authenticated by the certificate of the clerk, and cannot, therefore, be considered by this court. We can review the case no further than to see that the pleadings support the judgment rendered.

The plaintiff in error commenced the action to recover the possession of certain personal property alleged to be wrongfully detained by the defendant. The answer was a general denial and other special defenses. If the de-

¶ 1. See Appeal and Error, vol. 3, Cent. Dig. § 2703.

Digitized by Google

fendant had stood on the special defenses alone, we have no doubt that they were insufficient; but the general denial put the plaintiff to the proof of his right of possession, and entitled the defendant to a judgment in case he failed in such proof. The court and jury took the view that his evidence was not sufficient to sustain his claim, and, as there is no proper bill of exceptions before us, we cannot review this finding.

We recommend the affirmance of the judgment.

ALBERT and AMES, CC., concur.

Affirmed.

WENTZ v. MEYER.

(Supreme Court of Nebraska. Nov. 20, 1901.)

RECORD ON APPEAL—CORRECTIONS.

1. Except upon direct attack by motion assailing its sufficiency or accuracy, a transcript of the record of a district court, transmitted to this court on error or appeal, imports absolute verity, and alleged errors and imperfections therein will not be corrected upon the oral representation of counsel made at the time of the submission of the case.

Commissioners' Opinion. Department No. 3. Error to District Court, Richardson County; Stull, Judge.

"Not to be officially reported."

Action by Fred Meyer against August Wentz. Judgment for plaintiff, and defendant brings error. Reversed.

C. F. Reavis and Edwin Falloon, for plaintiff in error. F. Martin, for defendant in error.

AMES, C. This cause comes here on a petition in error, and was submitted on a brief, without oral argument, by the plaintiff in error alone. One of the errors complained of is that the court instructed the jury that a certain matter touching the controversy was agreed upon between the parties, but that in fact there is no admission of such an agreement in the pleading, and its existence is one of the matters about which there is a conflict in the evidence. The record supports the contention of the plaintiff in error, but counsel for the defendant in error, by permission, made a statement, at the time the case was submitted in this court, to the effect that the paragraph complained of is mistakenly included among the instructions, and that it is in fact a copy of a stipulation made by the parties in the district court before the case was submitted to the jury. There are indications in the record, of considerable weight, which tend to support this representation, but we think we are bound by the explicit statement of the transcript that the paragraph was given by the court, of his own motion, as an instruction to the jury. We do not think this court would be justified in not only striking the paragraph from the list of instructions, but in giving it force as a stipulation, upon the oral representation of counsel for one of the parties, made in the absence of his adversaries, at the time of the submission of the case. A refusal so to do is, of course, no reflection upon the credibility of counsel, but the court, we think, is without power to adopt such a course. The imperfection of the record, if any, should have been corrected by other means, at an earlier day. In its present condition it imports absolute verity, and must receive the treatment due to that character. So treated, the error complained of is apparent, and a reversal is inevitable.

We recommend that the judgment of the district court be reversed and a new trial awarded.

ALBERT and DUFFIE, CC., concur.

Reversed.

WHITWELL v. JOHNSON.

(Supreme Court of Nebraska. Nov. 20, 1901.)

BEST AND SECONDARY EVIDENCE.

1. Before the contents of a lost letter can be introduced in evidence, there must be testimony of its loss, and also testimony tending to prove the handwriting, or that it came from the alleged writer or his authorized agent, or was received in due course of mail in answer to letters previously mailed to the address of the alleged writer.

2. Evidence examined, and *held* not to be sufficient identification to permit the contents of the letter to be received in evidence.

Commissioners' Opinion. Department No. 1. Error to District Court, Butler County; Bates, Judge.

"Not to be officially reported."

Action by James Whitwell against Harman Johnson. Judgment for defendant, and plaintiff brings error. Reversed.

Arthur J. Evans and W. A. Saunders, for plaintiff in error. Matt Miller, for defendant in error.

DAY, C. This case was tried in the district court of Butler county upon appeal from a judgment of the county court. The trial resulted in a judgment in favor of the defendant, to review which the plaintiff has brought error to this court. The basis of the action is a promissory note for $450, executed and delivered by the defendant Harmon Johnson to one John Hawthorn, and by him assigned to the plaintiff for a valuable consideration before maturity. The record discloses that the note was a part of the purchase price of two valuable horses, one of which was a registered Clydesdale stallion, purchased by the defendant for breeding purposes, and guarantied by the seller, Hawthorn, as a reliable foal getter. One of the conditions of the sale was that, if the guaranty should fail, the note was to be returned to the defendant. The testimony was clear

Digitized by Google

and undisputed that the horse failed to meet the requirements of the guaranty.

The real question presented upon the trial was whether the plaintiff was an innocent purchaser of the note. The theory upon which the case was tried on behalf of the defendant was that plaintiff was in fact a part owner of the horses at the time of the sale, and as such could not become an innocent purchaser of the note. In support of this contention the defendant, over the objection of the plaintiff, introduced the contents of a lost letter, claimed to have been written by the plaintiff to the defendant prior to the purchase of the note by plaintiff, in which plaintiff made inquiries respecting the terms of the sale to the defendant by Hawthorn and others, and in which he stated that he had an interest in the horses. The plaintiff denied having written any letter to the defendant. The evidence tending to establish the existence of the letter preliminary to the introduction of secondary evidence of its contents was as follows: "After you purchased the horse and mare from Hawthorn, you may state whether or not you ever received any letters from James Whitwell, the plaintiff in this action. A. I did. Q. How did you receive it? A. Well, I received it in an envelope. Q. Through the post office? A. Yes, sir; through the post office." Evidence was also introduced tending to establish the loss of the letter, and that unsuccessful search had been made for it in the places where it was most likely to be found. No attempt was made to show that the letter was in the handwriting of the plaintiff, or that it was sent by his authority or direction, or that it was in response to a letter previously written to him. The only identification of the letter was the declaration of the defendant that he received it from the plaintiff, and on cross-examination it was shown that his statements were his conclusions drawn from the fact that the name "James Whitwell" was signed to the letter. If the letter itself had been offered in evidence, it would have been incompetent until it had been in some manner identified as the plaintiff's letter; and the same rule obtains where an instrument has been lost, and its contents is sought to be shown. In our opinion, the identity of the letter was not sufficiently established to permit of the introduction of secondary evidence of its contents. The mere fact that it was signed "James Whitwell" would not of itself create the presumption that the plaintiff wrote it. In Gartrell v. Stafford, 12 Neb. 546, 11 N. W. 732, 41 Am. Rep. 767, the rule is stated as follows: "When a contract is sought to be proved by letters, there must be testimony tending to prove the handwriting, or that they came from the defendant or an authorized agent, or received in due course of mail in answer to letters mailed to the address of the alleged writer." The introduction of testimony of the contents of the letter was incompetent, and highly prejudicial to the plaintiff.

It is therefore recommended that the judgment be reversed, and the cause remanded for further proceedings.

HASTINGS and KIRKPATRICK, CC., concur.

Reversed and remanded.

GODDARD v. CITY OF LINCOLN.

(Supreme Court of Nebraska. July 3, 1903.)

MUNICIPAL CORPORATIONS—DEFECTIVE STREETS—NOTICE OF DEFECT—CONSTITUTIONAL LAW.

1. The liability of a city for injuries resulting from defective streets or sidewalks rests exclusively upon express or implied provisions of the statute, and it is competent for the Legislature to limit such liability or remove it entirely.

2. Section 110, art. 1, c. 13a, Comp. St. 1901, provides that cities of the first class shall not be liable for such injuries unless notice in writing of the defect causing the injury shall have been filed with the city clerk at least five days before the injury occurred. In an action to recover of a city for such injury, *held*, that a petition failing to allege the filing of such notice with the clerk as required by said section is fatally defective.

3. The guaranty in the bill of rights that every person shall have a remedy by due course of law for every injury done him in his lands, goods, person, or reputation is not a guaranty of a remedy for every species of injury in respect to such matters, but only for such as result from an invasion or infringement of a legal right, or the failure to discharge a legal duty or obligation.

4. Where a duty is imposed by the Legislature, that body may qualify and limit it, and one complaining of an omission to discharge such duty will not be heard to complain of the qualifications and limitations accompanying it.

(Syllabus by the Court.)

Commissioners' Opinion. Department No. 2. Error to District Court, Lancaster County; Cornish, Judge.

Action by Isaac N. Goddard, administrator, against the city of Lincoln. Judgment for defendant, and plaintiff brings error. Affirmed.

George A. Adams, for plaintiff in error. E. C. Strode and D. S. Flaherty, for defendant in error.

ALBERT, C. The plaintiff filed a petition against the defendant, which, omitting the formal parts, is as follows: "The plaintiff complaining of the defendant, the city of Lincoln, says: (1) That the defendant, the city of Lincoln, is a corporation organized and acting under the laws in the state of Nebraska, and is a city of the first class. (2) That the plaintiff, Isaac N. Goddard, was on the —— day of May, 1901, by the county court of Lancaster county, Nebraska, appointed administrator of the estate of Arthur E. Goddard, deceased, who died in the coun

of Lancaster and state of Nebraska, intestate, on or about the 6th day of May, 1901. (3) That theretofore, to wit, on the 6th day of May, 1901, the decedent, Arthur E. Goddard, being then of the age of 15 years, and unmarried, was passing along and upon the sidewalk on the south side of R street, in the said Lincoln, Neb., between Nineteenth and Twentieth streets of the said city, and in front of lot 5, block 8, in Kinney's O street addition to the said city of Lincoln, Nebraska, and in front of a store known as 1903 R street, at which point the said sidewalk was at said time badly and dangerously out of repair, the same being constructed of a wooden substance, being a board sidewalk, constructed originally by the laying of wooden stringers lengthwise along said sidewalk, and the nailing of boards crosswise of said stringers along said sidewalk space; that said sidewalk was at said time and place, to wit, May 6, 1901, and in front of lot 5, block 8, Kinney's O street addition to said city of Lincoln, Nebraska, and in front of the store building known as 1903 R street, in said city, badly out of repair, the boards of the same and on the same, and constituting a part of the same, at said time and place, being loose and lying loose upon said stringers, and one or two boards being entirely removed therefrom, so as that said sidewalk was at said time and place in an unsafe and dangerous condition, and had been in such unsafe and dangerous condition for a long time prior thereto, all of which the said city of Lincoln had full knowledge; that on said day at said place the said decedent, Arthur E. Goddard, while lawfully and rightfully passing along and over said sidewalk, without any fault or negligence of his, or without any fault or negligence of the plaintiff, Isaac N. Goddard, stepped into the hole in said sidewalk, and because of said unsafe condition of the same, and without any fault of his or his said father, plaintiff herein, was thrown violently and forcibly to the ground, and upon said sidewalk, so as that he was seriously, dangerously, and mortally injured, and from the effects of which he soon thereafter died; that the death of said Arthur E. Goddard was caused by and through the negligence of the said defendant, the city of Lincoln, without any fault or negligence on his part or on the part of his father, Isaac N. Goddard, who sues herein as administrator of his estate; that said decedent, Arthur E. Goddard, was a bright, healthy, intelligent, and industrious boy; that his services were worth to his father the sum of $500 per year; that the plaintiff herein has been put to a large expense in the burial and funeral services of said decedent, to wit, the sum of $150; that, by reason of the wrongful death of the said Arthur E. Goddard as above stated, the plaintiff has been damaged, because of the loss of his service, society, and expense of burial, etc., in the sum of $5,000; that after the death of the said Arthur E. Goddard, to wit, on the —— day of May, 1901, within 30 days from the date of his d and from the date of said injury causin death, this plaintiff filed with the mayor city council of said city of Lincoln, Nebr defendant herein, a claim for said dam in the sum and amount herein sued for, the said city, defendant herein, failed refused to allow or pay the same, or part thereof." The defendant interpos general demurrer, which was sustained the court. The plaintiff elected to stan his petition, and judgment was given fo defendant. The plaintiff brings error.

We think the demurrer was properly tained. A city is a creature of the Le ture. Its rights, duties, and liabilities a be measured by the statute under whi exists. Early in the history of this sta city was held liable for injuries resu from the defective condition of its st on the ground that it had exclusive co of such streets, and the Legislature placed ample means at its disposal to tain its streets in a safe condition. O v. Olmstead, 5 Neb. 446. The principl nounced in that case has since been freq ly applied. Aurora v. Cox, 43 Neb. 72 N. W. 66; Lincoln v. O'Brien, 56 Neb. 77 N. W. 76; Beatrice v. Reid, 41 Neb. 59 N. W. 770. As the liability in such must rest on some express or implied p sion of the statute, it is clear that the L lature may place such limitations upon it may deem proper, or, for that matter, it away entirely. The defendant is a of the first class, and is governed by the visions of chapter 16, Laws 1901, whi chapter 13a of the Compiled Statutes of Section 110, art. 1, of that chapter, follows: "Cities of the first class sha absolutely exempt from liability for dam or injuries suffered or sustained by re of defective public ways or the sidew thereof within such cities, unless actua tice in writing of the defect of such p way or sidewalk shall have been filed the city clerk at least five days before occurrence of such injury or damage. I absence of such notice, so filed, the city not be liable and in all cases such n shall describe with particularity the and nature of the defects of which comp is made." The foregoing section clearly its the liability of cities for injuries resu from defective streets or sidewalks to injuries as result more than five days the filing of the notice in accordance the provisions of such section. In words, in order to fasten the liability up city, it is incumbent upon those seekin recover for the injury to allege and not only the fact of the injury, but also notice of the defect causing the injury been given for the time and in the ma provided by said section; and a petition w fails to allege that such notice was give thereby required, and for the length of

there specified, is vulnerable to a demurrer, because it omits one of the ultimate facts essential to a recovery.

The plaintiff contends that the section quoted contravenes the Bill of Rights, which guarantees to every person a remedy for any injury done him in his lands, goods, person, or reputation. The constitutional provisions invoked were not intended to guaranty indemnity against injuries of every species, but only such as result from the invasion or infringement of a legal right, or the failure to discharge a legal duty or obligation. While the charter of cities of the first class imposes upon such cities the duty of keeping their walks in a reasonably safe condition, by the provisions of section 110, supra, such duty does not become imperative or active until the notice therein has been given in the manner and for the time therein specified. Such duty and its correlative right, as we have seen, rest exclusively on the statute. It would have been competent for the Legislature to relieve such cities of the duty of maintaining their walks, and from all liability for injuries resulting from their unsafe condition. If the right to recover for such injuries might have been withheld entirely, one seeking to recover for such injuries certainly cannot complain of the conditions with which the Legislature has seen fit to accompany the right. The law, like the rules of society, forbids that one should complain that a gift is less valuable than it should be.

The plaintiff also contends that the petition charges that the city had full knowledge of the defective condition of the walk where the injury occurred, and consequently that a written notice, filed with the clerk, would have served no useful purpose. The section quoted should be read in connection with section 108, which precedes it, and which provides that five days' notice by publication be given abutting owners of the unsafe condition of the sidewalks, and makes such owners primarily liable for injuries resulting from such condition after that time. The provisions of section 110 were clearly intended to enable the city to take steps to fasten the liability upon the abutting owners. But whatever its purpose, it is clear and explicit that the city is not liable unless the notice required by its terms be given in the manner therein provided. It makes such notice a condition precedent to a recovery, and, unless it be averred and proved, there can be no recovery. McNally v. Cohoes, 53 Hun. 202, 6 N. Y. Supp. 842, appears to be in point. A special statute provided that "the city of Cohoes shall not be liable for the damage or injury sustained by any person in consequence of any street, highway, bridge, culvert, sidewalk or crosswalk in said city being out of repair, unsafe, dangerous or obstructed by snow, ice, or otherwise, or in any way or manner, unless actual notice of the defective, unsafe, dangerous or obstructed condition of said street, highway, bridge, culvert, sidewalk, or crosswalk shall have been given to the common council of the said city, or the superintendent of streets and public grounds of said city, at least twenty-four hours previous to such damage or injury." In that case, where the statute just quoted was involved, the court said: "Previous to this statute, constructive notice would have sufficed. Constructive notice signifies that the party to be affected might reasonably have acquired or obtained actual notice, and that, if he had not, it was his fault, and, since he could not interpose his fault to protect himself, he was without protection against the charge of notice imputed by the circumstances. Constructive notice in case of defective streets is an inference of notice, drawn from official opportunity to obtain, and from official obligation to be reasonably vigilant in keeping the public streets safe for travel. The many cases, somewhat similar to the one now before us, which have been before the court, in which notice has been imputed to municipal corporations by juries, have not infrequently excited the suspicion that municipal corporations are too liable to be unjustly convicted of negligence, and that the doctrine of constructive notice affords too dangerous a temptation to juries to make such corporations the indemnitors of the injured, under the unjust pretext that their negligence caused the injury. It is not improbable that such considerations, whether just or unjust, were in the mind of the framers of this statute. Its object is to exempt the city from liability unless it has actual notice, as distinguished from constructive or possible or imputed notice, which may in fact be no real notice. It requires that such actual notice must be given, not imputed, not derived, or obtained or acquired. * * * The court cannot say that it is wrong for the Legislature to impose upon the citizen, as a condition of the liability of the city to him, that he or some one of his fellows shall give some notice of the danger which exists. It may be wise to enact that the government will protect the people if only some one of the people will give notice that protection is needed. The people are many, compared with the few officials, and it may not be unreasonable that the people should be accorded the privilege to summon the officials to duty." The foregoing, we think, justifies the judgment of the district court; and it is unnecessary, therefore, to go into the other defects in the petition, which the defendant insists were sufficient to warrant the court in sustaining the demurrer.

It is therefore recommended that the judgment of the district court be affirmed.

BARNES and GLANVILLE, CC., concur.

PER CURIAM. For the reasons stated in the foregoing opinion, the judgment of the district court is affirmed.

Digitized by Google

OMAHA BRIDGE & TERMINAL RY. CO. v. REED et al.

(Supreme Court of Nebraska. July 3, 1903.)

EMINENT DOMAIN—APPEAL FROM AWARD—RIGHTS OF MORTGAGEE—PARTIES.

1. A mortgagee is an owner, within the meaning of the statute providing for the taking of land under the power of eminent domain; and, as such owner, he has the right to prosecute an independent appeal from the freeholders' award.

2. In proceedings for the condemnation of land under the power of eminent domain, the money awarded by the freeholders, or by the district court on appeal, stands in place of the land, and belongs to lienholders, to the extent of the value of their liens.

3. On appeal by a mortgagee from an award made by freeholders in a condemnation proceeding, the question to be tried and determined is the value of appellant's lien on the property appropriated.

4. An appeal by a mortgagee in a condemnation proceeding is not effective as to the landowner against whom no summons has been issued.

5. If the landowner is not brought into the district court by the mortgagee's appeal, the corporation at whose instance the condemnation proceeding was initiated may bring him in, if it is necessary to do so for the protection of its rights.

6. A landowner who fails to appeal from the freeholders' award in a condemnation proceeding is conclusively bound by it.

(Syllabus by the Court.)

On rehearing. Affirmed.

For former opinion, see 92 N. W. 1021.

Wharton & Baird, for plaintiff in error. Hall & McCulloch, for defendants in error.

SULLIVAN, C. J. After carefully examining the questions involved in this litigation, we conclude that the judgment of affirmance should be adhered to. We find it necessary, however, to modify in one particular the commissioner's opinion. It being settled that a mortgagee is an owner within the meaning of the statute providing for the taking of land under the power of eminent domain, it seems to follow that his right to an independent appeal for the protection of his interests cannot be denied. His security having been taken for public purposes, he is, of course, entitled to have the money paid as compensation applied upon his claim. The condemnation money stands in place of the land, and belongs to the mortgagee, to the extent of the value of his lien. Insurance Co. v. Slee, 123 Ill. 57, 12 N. E. 543; Chicago, B. & Q. R. Co. v. Chamberlain, 84 Ill. 333; Calumet River Ry. Co. v. Brown, 136 Ill. 322, 26 N. E. 501, 12 L. R. A. 84; Michigan Air Line Co. v. Barnes, 40 Mich. 383; 1 Jones, Mtgs. § 78; 7 Enc. Pl. & Pr. 637.

Upon the trial of this case in the district court it was in effect determined that the mortgagees' interest in the land equaled or exceeded the damages assessed by the jury. In other words, the mortgagees, claiming to be owners, within the meaning of the statute, presented their claim to the district court for adjudication. They asserted and proved that they were owners, and that the valu their ownership was at least equal to amount named in the verdict. The Or Bridge & Terminal Company had been summoned. It was in court, and had a opportunity to controvert and disprove mortgagees' claim. It knew the issue sented for trial was the value of the gage lien, and, if it was of opinion tha presence of the owner of the fee was n sary for the protection of its rights, it its privilege to have him brought in failed to have him brought in; in effe consented to have the issue tried and termined without him; and it must abide by the result. Chicago, K. & N. Ry v. Ellis, 52 Kan. 41, 33 Pac. 478; Lan Chicago & C. R. Co., 57 Iowa, 636, 11 N 612; Washburn v. Milwaukee & L. W Co., 59 Wis. 379, 18 N. W. 431.

In condemnation proceedings notice o peal must be given when the statute so vides. Maxwell v. La Brune, 68 Iowa, 68 N. W. 18; Butte County v. Boydstun, 68 189, 8 Pac. 835; Jones v. Proprietor Morris Aqueduct, 36 N. J. Law, 206. this case the statute with respect to n was not complied with. No notice of ap was given to the landowner, and no e made by either the mortgagees or the pany to make him a party to the action i district court. This being so, we must fess that we were wrong in holding, as w in the former opinion, that the appeal effective as to him. It was not effective, the freeholders' award, so far as he is cerned, is conclusive.

The motion is overruled.

ANDERSEN et al. v. ANDERSEN

(Supreme Court of Nebraska. July 3, 1

WILLS—CONSTRUCTION—EQUITY—CONTEST WILL—JURISDICTION—QUIETING TITL

1. Where no trust is created, neither th ecutor, nor the heirs or devisees, who only a legal title in the estate, will be mitted to come into a court of equity fo purpose of obtaining a judicial constructi the provisions of a will. Where only p legal titles are involved, equity will no sume jurisdiction to declare such legal but will remit the parties to their remedi law.

2. The district court has no original diction in an action to contest a will, o aside the probate of the same.

3. The county court has original ju tion in the probate of a will, and its orde mitting it to probate is conclusive, unless, direct proceeding by appeal or otherwise, reversed.

4. The county court has jurisdiction to strue wills for the purposes of the admin tion and settlement of estates. But the struction of a will in such a case is for t formation and benefit of the executor or a istrator only, in order to advise him what c to pursue. It will protect him from any c of maladministration of the estate, but i judicates nothing beyond his rights and l ties in the execution of his office. Controv between adverse claimants under the will not be affected thereby.

Digitized by Google

5. A petition in which it is alleged that the plaintiffs are the owners of, and have a legal title to, certain real estate (describing it), and that defendant by his wrongful acts has cast a cloud on their title, and which contains a prayer for general equitable relief, states a cause of action, and will resist a general demurrer.

6. If such petition contains other allegations and demands, constituting a cause or causes of action over which the court has no jurisdiction, such matters will not render it vulnerable to a demurrer, but should be treated as surplusage.

(Syllabus by the Court.)

Commissioners' Opinion. Department No. 2. Error to District Court, Howard County; Paul, Judge.

Action by Louis N. Andersen and another against Anders P. Andersen. Judgment for defendant, and plaintiffs bring error. Reversed.

F. W. Button, T. T. Bell, and W. F. Button, for plaintiffs in error. Henry Nunn, for defendant in error.

BARNES, C. The plaintiffs commenced this action in the district court of Howard county. The allegations of their petition were in substance as follows: That the plaintiffs, Louis N. Andersen and Ole Andersen, and the defendant, Anders P. Andersen, were the sons of one Frederick Andersen, and his only heirs; that on the 7th day of January, 1896, Frederick Andersen executed his last will and testament, and afterwards, on the 7th day of July, 1896, departed this life; that he was seised in fee simple at the time of his death of the north half of the northwest quarter of section 33, township 14, range 11, in Howard county, Neb.; that by his said will he bequeathed all his property, both real and personal, to his sons. A certified copy of the will was attached to the petition, marked "Exhibit A." It was further alleged that the plaintiffs are each the absolute owners of, and have legal title to, an undivided one-third interest in the said real estate, and are entitled to the immediate possession thereof; that they claim title under the will as probated in Howard county, Neb., as the same appears on file in the probate court of said county, a certified copy of which is now recorded in the recorder of deeds office of Howard county, Neb. Further, said plaintiffs claim title by virtue of the fact that they are the legal heirs and sons of Frederick Andersen, deceased. It was further alleged that at the time of the death of Frederick Andersen the plaintiff Louis N. Andersen visited Howard county, Neb., and was shown by the defendant what purported to be a copy of his father's will; that the plaintiffs learned afterwards, in June, 1901, that the will shown them by the defendant was not a true copy of the will of Frederick Andersen, deceased; that it purported to bequeath all of the property belonging to the deceased, both real and personal, to the defendant, Anders P. Andersen, the purported copy reading, "to my son, Anders P. Andersen," while the true will reads, "to my sons"; that plaintiff believed the said defendant was acting honestly, and that said copy was a true copy of his father's will, and thereupon notified his brother Ole Andersen of the fact, and returned to his home, in Kansas; that the defendant petitioned the probate court of Howard county, Neb., to probate the will of said Frederick Andersen, deceased, and these plaintiffs, being nonresidents of the state of Nebraska, were constructively served, and the said will probated; that the will probated was the true will of Frederick Andersen, deceased, and bequeathed and devised all of his estate, both real and personal, to his sons; that the defendant thereupon by fraud and deceit obtained a purported copy of said will and the probating thereof, which said copy of the will and the probating thereof was false, and which bequeathed and devised the property of the said Frederick Andersen, deceased, directly to his son (said fraudulent copy reading, "to my son"), and fraudulently procured the same to be recorded with the recorder of deeds of Howard county, Neb., in Miscellaneous Records 4, at pages 184, 185, and 186—all this with intent to cheat and defraud the plaintiffs out of their rights in and to said property—and that the said forged will recorded with the recorder of deeds as aforesaid is a cloud on the plaintiffs' title, and the title of each of them; that defendant, Anders P. Andersen, is made by the will executor thereof, but he failed to give a bond and take the oath of office, but that all claims presented were paid out of the personal estate of Frederick Andersen, deceased, by the said defendant; that defendant claims to be the sole owner of the real estate described in the petition, by virtue of the said forged will recorded with the recorder of deeds, and also by virtue of the true will, he having fraudulently procured the probate court to find that he is the sole legatee under the will; that there is a dispute between plaintiffs and defendant over the construction to be given the last will and testament of Frederick Andersen, deceased; that the defendant claims that the true will, and the one that was probated, reads, in the first paragraph of the devising part, "son," instead of "sons." Defendant further claims that if the will reads "son," instead of "sons," then the following paragraph of said will, naming Anders P. Andersen executor, shows that he is the son designated, while the plaintiffs claim that if the said will does read "son," instead of "sons," then said will is void for uncertainty. It was further alleged that Frederick Andersen left a considerable amount of personal property; that said defendant has wrongfully and unlawfully appropriated all of said property to his own use, and has failed and refused to divide the same with these plaintiffs according to the terms of the will, or under the law if the will be void for uncertainty, although he has been requested to do so; that plaintiffs each

claim a one-third interest in said personal property under the will, and also under the law, if the will be declared void; that the said defendant has had the use of said real estate since the death of Frederick Andersen, and has failed and refused to account to the plaintiffs for the rents and profits of the same; that the defendant has paid the taxes on the property since his father's death; and that the plaintiffs are ready, and now offer, to reimburse the defendant for the taxes paid by him. Following these allegations, the petition concludes with a prayer in substance as follows: The plaintiffs therefore pray that said will may be construed, and, if the same be adjudged to read "sons," that the same may be adjudged good in law, and these plaintiffs may each be adjudged to have an undivided one-third interest in the above-described real estate, and, if the said will be found to read "son," that the same may be adjudged void and of no effect for uncertainty, and that each of these plaintiffs has an undivided one-third interest in the said real estate under the law; that there may be an accounting of personal property and money left by said Frederick Andersen, deceased, and the rentals and profits accruing since his demise, and the taxes paid by defendant, and the expenses incurred in settling all just claims against the estate; that the defendant may be adjudged as holding the residue of said personal estate in trust for the heirs of Frederick Andersen, deceased, under the will, or, if the will be adjudged void for uncertainty, then under the law; that said forged will may be stricken from the records in the recorder of deeds office, and adjudged of no effect; that the finding of the probate court that Anders P. Andersen is the sole legatee be held void and of no effect, and be ordered stricken from the records of the recorder of deeds; that, if said will be declared void for uncertainty, said will and the probate thereof be declared void and of no effect, and that the same be ordered stricken from the records of the probate court, otherwise to remain in full force and effect; that each of these plaintiffs may be adjudged to have an undivided one-third interest in said real estate, and that they may have the title to the same quieted in fee simple in each of them; that the defendant may be adjudged to have only a one-third interest in the said real estate, and no claim to the interest of these plaintiffs; that the plaintiffs may have general relief in equity, and recover their costs of action.

The copy of the will attached to the petition is in such a condition that it is difficult to determine, without extrinsic evidence, whether the word in dispute is "son" or "sons."

To this petition the defendant demurred for the following reasons: First, because the court has no jurisdiction of the subject-matter of the action; second, because the petition does not state facts sufficient to constitute a cause of action in favor of the plaintiffs and against the defendant. The demurrer was sustained, and the action dismissed. The plaintiffs thereupon prosecuted error to this court, and contend that the court erred in sustaining the demurrer and dismissing the suit.

Plaintiffs now claim, as the basis of their contention, that the action was one to quiet title by persons out of possession, and cite a long list of authorities showing that such an action may be maintained. There is no doubt but that our Code provides that an action to quiet title to real estate may be maintained by one either in or out of possession, and this is the only relief plaintiffs are entitled to in this action. The allegations and prayer of the petition, fairly construed, seem to constitute it, first of all, an action to construe a will; and, if it is construed according to the plaintiffs' contention, then to set aside the findings and decree of the probate court in construing it for the purpose of administering the estate of the testator, and the judgment of that court declaring that the defendant was the sole legatee under the will. It is true that the district court has jurisdiction in equity of actions to construe wills in cases where a trust relation exists by reason of the terms of the instrument itself (Pom. Eq. Jur. § 1156; Sellers v. Sellers, 35 Ala. 235; Clark v. Clark, 17 Ga. 485; Strubher v. Belsey, 79 Ill. 307; Bailey v. Briggs, 56 N. Y. 407; Chipman v. Montgomery, 63 N. Y. 230; Dill v. Wisner, 88 N. Y. 160; Collins v. Collins, 19 Ohio St. 469), and to determine the rights of parties thereunder, while the county court has exclusive original jurisdiction in the probate and contest of wills, and in their construction, for the purposes of administration and settlement of estates (section 140, c. 23, Comp. St. 1901; Loosemore v. Smith, 12 Neb. 343, 11 N. W. 493; Freeney v. First Nat. Bank [C. C.] 16 Fed. 433; Wolf, Executor, v. Schoeffner, 51 Wis. 52, 8 N. W. 8; Appeal of Schaeffner, 41 Wis. 260). In the case at bar no trust relation is created by the terms of the will, and it is alleged in the petition that the county court has duly probated it, and rendered its decree construing that instrument for the purposes of administration, and has by its judgment declared the defendant to be the only legatee thereunder. This judgment inures to the benefit of the executor only, and informs him what course to pursue. It is sufficient to protect him against any charge of maladministration of the estate. It adjudicates nothing, however, beyond his rights and liabilities in the execution of his office. Controversies between adverse claimants under the devise are in no manner affected thereby. The district court has no jurisdiction in an original action to set aside, modify, or annul the findings and judgment of the county court on these matters.

Again, if the plaintiffs' contention as to

Digitized by Google

the proper construction of the will be not adopted, then they ask the court to declare it void for uncertainty, in order to invest them with the ownership of two-thirds of the land in question under the law of descent. This amounts to a proceeding to contest a will. The county court is the tribunal of original and exclusive jurisdiction over such a proceeding, and the matter can only come before the district court on appeal or error from the judgment of that court. However, under our liberal system of pleading, if a petition contains allegations sufficient to entitle the plaintiff to any relief whatever, a general demurrer thereto should be overruled. An examination of the numerous and apparently conflicting allegations and demands for relief contained in the petition in this case convinces us that the plaintiffs have alleged that they have a title to two-thirds of the land in question, and are the owners thereof, and of the personal property and proceeds thereof; that defendant, by procuring a forged will, the probate thereof, and a finding of the county court thereon that he is the sole owner of the land in question, and by filing such documents with the register of deeds of the county where the land is situated, has cast a cloud on their title, which they ask to have removed. It would seem, to that extent, the petition states a cause of action, and therefore the demurrer should have been overruled; and we recommend that the judgment of the district court be reversed, and the cause remanded for further proceedings.

ALBERT and GLANVILLE, CC., concur.

PER CURIAM. For the reasons given in the foregoing opinion, the judgment of the district court is reversed, and the cause remanded for further proceedings.

MOORE v. WADDINGTON.

(Supreme Court of Nebraska. July 3, 1903.)

ELECTION CONTEST—DISMISSAL—INTERVENTION—REINSTATEMENT.

1. The contestant in a proceeding to contest an election may voluntarily dismiss the proceeding at any time before issue is joined.

2. When such dismissal has been entered, the court, until it is set aside, is without jurisdiction to allow another party to intervene and be substituted as contestant. Whether such dismissal can be set aside, quære.

3. In such case the trial court has no authority to set aside the dismissal without notice to the contestant.

4. After a motion to set aside such a dismissal, and an application for leave to intervene was made by the plaintiff in error, the incumbent challenged the jurisdiction of the court to set aside the dismissal or to allow the intervention. *Held*, that an order sustaining such challenge in the case before us is not shown to be prejudicially erroneous. *Held*, further, that contestant is a necessary party to proceedings in error to review such order.

(Syllabus by the Court.)

Commissioners' Opinion. Department No. 2. Error to District Court, Gage County; Letton, Judge.

Proceedings by Samuel Moore against William A. Waddington to contest an election. Judgment for defendant, and plaintiff brings error. Affirmed.

L. W. Colby and A. H. Kidd, for plaintiff in error. E. O. Kretsinger and Hazlett & Jack. for defendant in error.

GLANVILLE, C. This case is before us upon a petition in error from the district court of Gage county, containing the following assignment of error only: "The court erred in affirming the order, judgment, and proceedings of the county court, and in dismissing said action." The case was in the district court upon a petition in error from the county court of Gage county, and the judgment of the district court complained of is as follows: "Now, on this 15th day of May, 1902, it being the thirty-ninth day of the February, 1902, term of the district court of Gage county, Nebraska, this cause came on to be heard upon the petition in error and the transcript of the proceedings, final judgment and order of the county court of Gage county, Nebraska, on file, and was submitted to the court, on consideration whereof the court finds no error in said order, judgment, and proceedings. Plaintiff in error excepts. It is therefore considered by the court that said order, judgment, and proceedings be, and the same are hereby, affirmed, and that the defendant, William A. Waddington, go hence without day, and recover his costs against the plaintiff, herein expended, taxed at $——, and it is further ordered that execution be awarded in this court to carry into effect this judgment. Plaintiff in error excepts."

The only assignment of error in the petition filed in the district court is as follows: "The court erred in sustaining the objections of the defendant to the jurisdiction of the court." The statement in that petition as to the judgment or order sought to be reversed is as follows: "The plaintiff in error complains of the defendant in error, for that on the 11th day of January, 1902, the defendant herein, as incumbent and contestee, obtained a ruling and order of the county court of Gage county, Nebraska, in an action pending in said court, wherein the plaintiff herein was plaintiff and the defendant herein was defendant, in which the said court sustained the objections of the contestee and defendant to the jurisdiction of said court, whereby a judgment was prevented." The order of the county court complained of, shown by the record, is as follows: "January 11, 1902, at 9 o'clock a. m., the court, being duly advised in the premises, sustains the objections to the jurisdiction of the court filed herein by the defendant and contestee, to which ruling the said Samuel Moore, by his attor-

Digitized by Google

neys, duly excepts. F. E. Bourne, County Judge."

It appears from the record that an action had been commenced in the county court of Gage county by one Winfield S. Tilton, against the defendant in error, contesting his election to the office of sheriff of Gage county, and by the law governing such cases the action would have stood for trial on January 6, 1902, the first day of the January term of that court. No record was brought to the district court, except a certified copy of the contents of the docket of the county court, in which we find the following entry: "January 4, 1902. Dismissal filed herein, a copy of which is as follows, to wit: 'In the County Court of Gage County, Nebraska. Before F. E. Bourne, County Judge. Winfield S. Tilton, Contestant and Complainant v. William A. Waddington, Incumbent. Dismissal. Comes now the above-named contestant, and hereby dismisses the above action. Dated this 4th day of January, 1902. Winfield S. Tilton, Contestant.'" It further appears that on that day he paid the entire costs. The next entry upon the docket is: "January 6, 1902. It is therefore ordered by the court that said cause be dismissed at contestant's costs, taxed herein at $6. F. E. Bourne, County Judge." It is urged by the plaintiff in error that this entry was made prior to 9 o'clock a. m. of the day of its date, and that the same is shown by affidavits. There was no bill of exceptions taken, and the affidavits cannot be considered. The next entry is: "January 6, 1902, at 8:20 o'clock a. m., objections to dismissal and motion to substitute party contestant filed herein, a copy of which is as follows." Then follows a paper entitled in the original cause, made on the part of plaintiff in error, copied in full into the docket. If we may consider this paper as a part of the record, it is sufficient to say it is an application to intervene, and to be substituted for the contestant, showing that the applicant is such party as by law may contest the election in question, with an offer of the bond required by statute. The next entry upon the docket is as follows: "January 6, 1902, motion of Samuel Moore to set aside dismissal, supported by affidavit of A. H. Kidd, filed herein, as follows." The motion, omitting formal parts, is as follows: "Comes now Samuel Moore, and says that he is a resident and an elector of Gage county, Nebraska, and has been for two years last past, and voted in said county at the general election held in November, 1901; and said Samuel Moore moves the court to vacate and set aside the order dismissing the above cause which was entered on the docket January 6, 1902, for the reason that said order was made by said court and entered by said court upon said docket about 8 o'clock a. m. on January 6, 1902, before the opening of the January, 1902, term of the county court, at which said cause was to be heard, and before the opening of court on said day, as shown by affidavit of A. H. Kidd, hereto attac marked 'A,' and made a part of this moti The next entry is: "January 10, 1902. tice with indorsements of service the filed herein, a copy of which is as follo Then follows a notice addressed to Win S. Tilton and William A. Waddington, indorsement of service, signed, "J. W. enfelter, Chief of Police." The next e is: "January 10, 1902. Special appear to jurisdiction of the court filed herei copy of which is as follows." Then fol upon the docket what purports to be of a paper filed on the part of Williar Waddington, and which, omitting signat and formal parts, is as follows: "Now co William A. Waddington, defendant and testee, and makes his special appear herein for the sole purpose of objectio the jurisdiction of this court to proceed ther in the cause, for the following rea to wit: (1) Said cause was dismissed by said Winfield S. Tilton on January 4, by written dismissal, and all the costs by him. (2) Said cause was dismissed by court on January 6, 1902, before any pa had been filed by the said Samuel Moor any other objector. (3) This court ha jurisdiction to proceed further in this ca (4) This court has no jurisdiction to pe the said Samuel Moore to intervene in cause. (5) The dismissal of this cause the plaintiff, Winfield S. Tilton, termin said action in this court. (6) The said uel Moore has no legal right to be su tuted instead of said Tilton in this ca and the court has no jurisdiction to r said substitution." The next entry "January 10, 1902, at 9 o'clock a. m., cause came on for hearing before the upon the objections to dismissal, and mo of Samuel Moore to be substituted as p contestant, with the bond tendered, and affidavits of A. H. Kidd and L. W. Colb tached thereto, and upon the motion Samuel Moore to set aside the dismissa tered in this cause, with the affidavit o H. Kidd attached to said motion, and liam A. Waddington, defendant and testee, by his attorneys, having filed a cial appearance herein, objecting to the j diction of the court to proceed further in cause; and the court, after hearing the a ments of counsel, takes said matter u advisement until January 11, 1902, o'clock a. m." Then follows the entry January 11th, copied above as the j ment complained of.

Two questions are presented and argue counsel: (1) Does the record before the trict court show such an order of the co court as can be reviewed upon error? Did the record brought to the district c show error of the county court in ente the order complained of? If either of t questions is answered in the negative, judgment of the district court must be

Digitized by Google

firmed. We think at least one or the other of them must be so answered.

Section 86 of the chapter on "Elections," in regard to such proceedings as this, provides: "The proceedings shall be assimilated to those in an action so far as practicable." In Burke v. Perry, 26 Neb. 414, 42 N. W. 401, it is said: "A contest of an election must be what its name implies—an adversary proceeding by which the matters in controversy may be settled upon issues joined." And in Spurgin v. Thompson, 37 Neb. 39, 55 N. W. 297, the parties are held to the same rules of pleading as in ordinary actions. We think this proceeding is so far assimilated to an action that under section 50a of our Civil Code, and the rule announced in State v. Matley, 17 Neb. 564, 24 N. W. 200, the plaintiff in error had a right to intervene therein if his application was made while the cause was pending in the court, and on proper and sufficient showing. We also think it is so far assimilated to an action as to give the contestant a right, either under section 430a or section 999 of our Code, to dismiss his action absolutely at the time he did so. In Harris v. Cronk, 17 Neb. 475, 23 N. W. 341, it is held: "An action in the district court, wherein no counterclaim or set-off has been filed, having been dismissed in vacation by the party plaintiff, and all costs paid, according to the provisions of section 430a of the Civil Code, it is incompetent for the court at the next or any subsequent term to permit an intervention in said cause." In Sims v. Davis, 48 Neb. 720, 67 N. W. 765, it is held: "In an action wherein the defendant has not appeared, a dismissal filed by plaintiff as provided by statute ends the case, and litigation therein cannot be continued." In that case, parties seeking to intervene moved the court, on notice, to set aside a dismissal filed and entered in vacation. The order overruling the motion was held no error. In Banks v. Uhl, 6 Neb. 145, it is held, in effect, that under the provisions of section 999 of the Code a plaintiff in the county court had the absolute right to dismiss his action. We think there was no action pending in the county court in which it could authorize the plaintiff in error to intervene.

If, however, we should hold that the dismissal was not absolute, and that the matter was still pending and under the control of the court, then, so far as the record shows, it is still pending, and the application of plaintiff in error has not been denied, nor his motion to set aside the dismissal overruled, and no final order is shown in the record. If, as plaintiff in error contends, the court still had control of the cause, and the order complained of prevented a ruling upon his motion to set aside the dismissal, even then it is not a final order. An order directly overruling such a motion is held in Sims v. Davis, supra, not to be a final order, if the court then had jurisdiction of the cause.

Moreover, the order complained of must appear to be prejudicial to the plaintiff in error, to justify a reversal thereof upon his application. Unless he had a right to an order setting aside the dismissal and allowing him to intervene, he is not prejudiced. Botl his motion to set aside the dismissal and his application to be allowed to intervene were made on showing by affidavits, and they are not preserved by a bill of exceptions The most that could be conceded for the power of the county court is that it may have had a discretionary power to set aside the dismissal at the time application of plaintiff in error was made; but the evidence produced to influence or control that discretion must be in the record, and be sufficient to show that it would not have been an abuse of discretion to grant him the relief asked, before prejudicial error can appear.

Again, we think, if the order complained of is final, because it prevents a judgment in the action, as is contended by plaintiff in error, then, before it can be reversed in error proceedings in a higher court, the contestant, Tilton, whose dismissal is sought to be set aside, must be made a party to the error proceeding, and this has not been done. Tilton was the plaintiff in the action, and had furnished the bond required by statute; he had dismissed the action; and we think the dismissal could not be set aside without notice to him, and the record does not disclose such notice.

We think the judgment of the district court is right, and recommend that it be affirmed.

BARNES, C., concurs.

ALBERT, C. I concur in the conclusion, because the contestant is a necessary party to the proceedings in this court, and has not been made a party.

PER CURIAM. For the reasons stated in the foregoing opinion, the judgment of the district court is affirmed.

BROWN v. SILVER.

(Supreme Court of Nebraska. Dec. 4, 1901.)

APPEAL — HARMLESS ERROR — LIMITATIONS —TRIAL—MISCONDUCT OF COUNSEL—PLEADING AND PROOF—SALE OF LAND—ACTION FOR PRICE.

1. Error cannot be predicated on the action of the trial court in excluding immaterial matters from the consideration of the jury.

2. The statute of limitations does not begin to run until a right of action has accrued.

3. When counsel, in their overzeal, in the argument of a case to a jury depart from the record, a sharp and prompt rebuke from the trial judge will ordinarily cure the error.

4. There is no variance between an allegation on a verbal contract and an unsigned memorandum of such contract alleged to have been

¶ 2. See Limitation of Actions, vol. 33, Cent. Dig. § 217.

Digitized by Google

made by the party charged at the time the contract was entered into, because such unsigned memorandum is not a written contract.

5. Evidence examined, and *held* sufficient to sustain the judgment.

Commissioners' Opinion. Department No. 2. Error to District Court, Clay County; Hastings, Judge.

"Not to be officially reported."

Action by Naomi Silver against Robert G. Brown. Judgment for plaintiff. Defendant brings error. Affirmed.

Leslie G. Hurd and Robert G. Brown, for plaintiff in error. G. W. Bemis, for defendant in error.

OLDHAM, C. This was an action for the recovery of $1,333.33, alleged to have been due from the defendant to the plaintiff as a part payment of the purchase price of a tract of land. The petition alleges that the tract of land was sold by the plaintiff and her husband, Espy E. Silver, to the defendant, for the agreed price of $2,500; that by the terms of the sale the defendant paid plaintiff and her husband $500 in cash, and assumed a mortgage for $600 on the premises, and also agreed to pay the interest on a mortgage of $1,333.33, which had been executed on the premises by plaintiff and her husband to secure an annuity of $80 to Rachael Silver, the mother of plaintiff's husband; and that at the death of Rachael Silver the defendant agreed to pay the remainder of the purchase price, $1,333.33, to plaintiff's husband, Espy E. Silver. The petition alleges the death of Rachael Silver on July 14, 1896, and that the account for the balance of the purchase money was duly assigned by Espy E. Silver to this plaintiff before the institution of this suit. Plaintiff attached to her petition a memorandum, alleged to have been in the handwriting of the defendant, and delivered to Espy E. Silver at the time of the purchase of the land, which was unsigned, and read as follows: "Due Espy E. Silver $1,333.33." Defendant filed numerous answers to this petition and the case appears to have been tried on his third amended answer. By this answer he admitted the purchase of the land from Espy E. Silver and plaintiff; denied that the consideration was $2,500, and claimed that the only consideration which he agreed to pay as the purchase price of the land was $500, which he paid in cash at the time of the purchase, the assumption of the $600 mortgage, and the payment of the annuity of $80 to Rachael Silver during her lifetime. The answer admits the death of Rachael Silver, as alleged in plaintiff's petition, and denies that there is anything due on the purchase price of the land. There were other allegations in the answer of immaterial matters, but nothing else tending to state a defense. Plaintiff replied, denying the new matter in defendant's answer. There was a trial to a jury, and a verdict was returned for plaintiff for the amount sued for. Judgment was dered on the verdict, and defendant b error to this court. The parties will be ignated in this opinion as they were i court below.

The alleged errors called to our atte in defendant's brief are the rulings o trial court in the admission and exclusi testimony, the giving of instructions leged misconduct of plaintiff's counsel, the insufficiency of the evidence to su the verdict. The allegations of error reference to the action of the trial cou the admission and exclusion of evidenc difficult to consider in the manner prese in defendant's brief, for the reason tha only serious allegations are based on a solute, inexcusable, and reprehensible statement of the facts as shown by the re The misstatement of facts begins with contention that the court erred in not mitting defendant to file a third ame answer, when the record shows specif that the court did permit defendant t this answer. This misstatement is foll by another, which alleges that, becaus court had failed to permit this answer filed, it excluded certain testimony of defendant tending to prove an alleged tract between Espy E. Silver and his er, Rachael Silver, by which the mort given to secure her annuity should be isfied at her death. The record shows instead of excluding this evidence, the admitted it, and overruled plaintiff's m to strike it out. There is no dispute the mortgage given by Espy E. Silve Rachel Silver. It was introduced in dence, and it showed on its face that it to be satisfied by the payment of an nuity of $80 to Rachael Silver during natural life. Plaintiff's contention was when the mortgage was extinguished b payment of the annuity and the deat Rachael Silver that the remainder of the chase price, $1,333.33, became due, and this was the agreement made with th fendant at the time the land was purch but plaintiff did not contend that this gage continued to exist after the deat Rachael Silver. The only contest over question between the plaintiff and defe was that defendant claimed that plaintif Espy E. Silver had a written contract Rachael Silver providing that the mor should terminate with her death. Pla admitted that this was the contract an derstanding, but denied that there was a written contract to this effect, except as was contained in the mortgage. Th sue was absolutely immaterial, and no could be successfully predicated on the r of a court in excluding such an imma matter.

Defendant complains of the action o trial court in admitting the memorandu up in plaintiff's petition which read, Espy E. Silver $1,333.33," but the r

shows that this exhibit was admitted without any objection on defendant's part, and it is now too late for him to complain of this action of the trial court.

It is contended by defendant that, if any right of action ever existed on this contract, it has been barred by the statute of limitations, but we cannot concede this, for, if the contract was as alleged by plaintiff, this $1,333.33 was not due until the death of Rachael Silver, and it is admitted that she died on the 14th day of July, 1896, and the record shows that this petition was filed on the 11th day of February, 1897; hence the statute of limitations did not begin to run against this claim until a right of action had accrued upon it—i. e. the 14th day of July, 1896.

A contention is made by the defendant that there is a variance between the allegation of the petition, which declares on an oral contract, and the written memorandum attached to the petition; but we cannot agree with this contention. The paper which bore the writing, "Due Espy E. Silver $1,333.33," was not a written contract. It was neither dated nor signed by any one, and was only admitted for the purpose of showing an admission of the defendant that the amount therein stated was due and unpaid. The testimony of Espy E. Silver and plaintiff with reference to this memorandum was that they wanted defendant to give them something that would show that he still owed them this amount of money, and that he (defendant) handed Espy E. Silver this memorandum after he had paid Silver the $500 on the contract.

The instructions given by the trial court were models of brevity and precision. They confined the jury strictly to the question as to whether the defendant agreed to pay this $1,333.33 as a part of the purchase price of the land to Espy E. Silver after the mortgage to Rachael Silver had been extinguished by her death, and properly told the jury that the burden was on the plaintiff to prove this allegation by a preponderance of the evidence. The jury was also instructed that unless they found from the evidence that defendant had agreed to pay this sum at the death of Rachael Silver to Espy E. Silver, they should find for the defendant. The other instructions were merely a statement of the issues and admissions, and an instruction defining the preponderance of evidence, and we find nothing in any of the instructions that could possibly have prejudiced the defendant.

The next question called to our attention in defendant's brief is the alleged misconduct of plaintiff's counsel in his closing argument to the jury. It appears from the record that in closing the case plaintiff's counsel engaged in a wordy altercation with one of the counsel for defendant, and that he attempted to go outside of the record, as he claimed, to defend himself against an attack made on him by one of defendant's counsel; but, be this as it may, the court promptly checked him, and compelled him to withdraw everything he had said outside of the record from the jury. When counsel in their overzeal in the argument of a case depart from the record, a sharp and prompt rebuke from the trial judge will ordinarily cure the error, and we think in this case that was all that was necessary.

There is also complaint made about the latitude which plaintiff's counsel took in his argument to the jury. This matter was presented by affidavits and counter affidavits to the court below, and, as we see nothing necessarily prejudicial in the argument ascribed to plaintiff's counsel, we do not feel justified in disturbing the findings of the trial court on that question.

The next question brought to our attention is as to the sufficiency of the evidence. The record shows that the contract was positively testified to by the plaintiff and her husband. The deed offered in evidence recited a consideration of $2,500. The written memorandum testified to by plaintiff and her husband was identified by experts as being, in their opinion, in the handwriting of the defendant. Two other witnesses testified that defendant told them that he bought the place for $2,500, and one of them—a brother of Espy Silver—testified that defendant told him all about the contract, and that at one time he had an assignment of this claim against the defendant, and that defendant told him that he would pay it when it became due. This array of testimony was met by a denial from the defendant, and practically nothing more. From this evidence, we think, the verdict was fully justified.

It is therefore recommended that the judgment of the district court be affirmed.

POUND and SEDGWICK, CC., concur.

Affirmed.

COFFIELD v. PARMENTER et al.

(Supreme Court of Nebraska. Nov. 20, 1901.)*

CREDITORS' SUIT—RETURN ON EXECUTION—FRAUDULENT CONVEYANCE—KNOWLEDGE OF GRANTOR.

1. The return of a sheriff upon an execution nulla bona, which has not been successfully impeached in a direct proceeding, is a sufficient basis for the maintenance of a creditors' bill, and the defendant cannot in such suit question the truth of the return for the purpose of showing that the plaintiff has not exhausted his legal remedies.

2. Evidence examined, and *held* to sustain finding of trial court that the grantee was charged with knowledge of the fraudulent purpose of his grantor in making the deed.

Commissioners' Opinion. Department No. 1. Appeal from District Court, Saunders County; Sedgwick, Judge.

"Not to be officially reported."

Digitized by Google

Action by Thomas Coffield against Alexander H. Parmenter and others. Judgment for plaintiff, and defendants appeal. Affirmed.

Lamb & Adams and H. Gilkison, for appellants. Brown & Sumpter and Good & Good, for appellee.

KIRKPATRICK, C. This is a suit in the nature of a creditors' bill, brought in the district court of Saunders county on May 6, 1897, by Thomas Coffield against Alexander H. Parmenter and his wife, Benjamin F. Parmenter and his wife, and the Union Central Life Insurance Company, to set aside a conveyance of certain land in Saunders county made by Alexander H. Parmenter and his wife on October 27, 1895, to Benjamin F. Parmenter, their son.. The petition alleges that the conveyance was made wholly without consideration, and for the purpose of placing the property beyond the reach of the creditors of the grantor A. H. Parmenter; and that B. F. Parmenter, the grantee, had full knowledge of the fraud at the time he accepted the conveyance. B. F. Parmenter and his wife answered, pleading that they purchased the land in good faith, for value, and without any notice of the insolvency of A. H. Parmenter, and without any knowledge of or participation in the fraud; and, in addition, pleaded that A. H. Parmenter owned real estate in Bethany and also in Cheyenne county, Neb., and that he owned a large amount of stock in the Bethany Manufacturing Company, a corporation, and that from this property Thomas Coffield could make the amount due on his judgment, if he so desired. To these answers a reply was filed by Coffield, pleading that the property in Bethany owned by A. H. Parmenter was his homestead, and exempt from execution, and that the Bethany Manufacturing Company was bankrupt, and insolvent, and its stock worthless, and denied that A. H. Parmenter owned lands in Cheyenne county of any value. Trial was had, which, on June 15, 1898, resulted in a finding and judgment in favor of Coffield, appellee, canceling and setting aside the deed by A. H. Parmenter and wife to B. F. Parmenter, and decreed the property subject to execution for the satisfaction of Coffield's judgment. From this judgment all of the Parmenters appeal to this court.

The facts disclosed by the evidence, briefly stated, are as follows: Some time prior to 1894 A. H. Parmenter was the owner of the title to the land in controversy in Saunders county, which was free of incumbrances. He removed to the village of Bethany, Lancaster county, for the purpose of educating his children, and rented the farm in question. After he removed to Bethany he became the president of the State Bank of Bethany. The bank became somewhat involved, and in the latter part of 1894 he, together with Louis M. Thomas, J. B. Briscoe, N. W. Henderson, C. P. Lomax, and others, officers and stockholders of the bank, executed to Thomas Coffield a note, on which, on February 28, 1896, judgment was rendered in the Lancaster county district court for $1,076.65. An execution was issued on this judgment, and on May 24, 1896, it was returned unsatisfied, and on September 3, 1896, a transcript of the judgment was filed in the district court of Saunders county, and on November 2d of that year an execution was issued thereon, which was likewise returned by the sheriff unsatisfied for want of property upon which to levy. About a year before this, and on October 27, 1895, Alexander Parmenter and wife conveyed the land in question to B. F. Parmenter, who paid on the purchase price $75 in money, and he and his wife executed notes for the remainder of the purchase price, the notes drawing interest at the rate of 6 per cent. per annum; the first note being in the sum of $925, and the remainder for $1,000 each. In the meantime, and just about a week before this deed was made, the State Bank of Bethany failed, and it appears that A. H. Parmenter, in trying to keep the bank running, had become very badly involved.

The only question requiring consideration in this case is one of fact. It is claimed by appellants that there is no evidence in the record tending to show that B. F. Parmenter, at the time he took the conveyance of the land in question, had knowledge of his father's insolvency, or tending to show that he participated in his father's fraudulent purpose to put the land beyond the reach of his creditors. B. F. Parmenter testified that he had no knowledge of his father's insolvency, and that he did not know that the State Bank of Bethany had failed. A. H. Parmenter was not called as a witness. It appears that B. F. Parmenter had rented the place of his father, and had been living on it nearly a year at the time of his alleged purchase. The testimony shows that he owned but a small amount of personal property, and that his wife was not possessed of any means; that the only sum he paid down for the land was the sum of $75; that the notes he gave were secured only by the signature of his wife. Not even a mortgage upon the land was given as security. Up to the time of the commencement of this suit it seems that B. F. Parmenter had paid $2,500 on the purchase price of the farm. But this money, it appears, he obtained by executing a mortgage on the place to the Union Central Life Insurance Company.

The burden of proof in this case, according to a well-established rule, was upon appellants. From a careful reading of the testimony, it very clearly appears that B. F. Parmenter must have known of the insolvency of his father at the time he took title to the premises, and from all the circumstances in the case, as disclosed by the evidence, we think the finding of the trial court that B. F. Parmenter was influenced and controlled by his father in the transaction, and that the land was conveyed to

Digitized by Google

him without consideration, and without financial ability on his part to pay for the same, is sustained by the evidence; and he must be held to have had notice that his father's purpose was to place the land beyond the reach of his creditors. The trial court heard the evidence, and so found, and we are unable to say that the finding is not supported by sufficient competent evidence.

It is contended by appellants that the testimony does not show that an execution had been issued upon the judgment, and returned unsatisfied for want of property, and that A. H. Parmenter did in fact have property subject to execution. The evidence discloses that an execution was issued and returned unsatisfied in Lancaster county, and that after the transcript was filed in Saunders county an execution was issued thereon, and likewise returned unsatisfied. It also appears that the property owned by A. H. Parmenter in Bethany was a homestead, and therefore exempt as such, and that the Bethany Manufacturing Company was insolvent, and its stock worthless. The evidence does not disclose whether or not A. H. Parmenter owned land of any value in Cheyenne county; but, however that may be, the rule is settled that the return of the sheriff on an execution nulla bona is conclusive of the question that the creditor has exhausted his legal remedies and is entitled to maintain the bill. "The general rule is that a court of equity will not interpose until the creditor has exhausted his remedy at law, and a judgment recovered, and an execution issued thereon and returned unsatisfied, are ordinarily required, and are considered the best evidence that the remedy at law does not exist." Weaver v. Cressman, 21 Neb. 678, 33 N. W. 478. In Baxter v. Moses, 52 Am. Rep. 785, the rule is announced as follows: "His [the debtor's] inability or unwillingness to pay should be established by some certain rule. What more reasonable one could be devised than that there shall be a judgment, an execution, and a return nulla bona? And, to remove all uncertainty, the official return is conclusive evidence that the creditor has exhausted all legal remedies without succeeding in collecting his debt. It is a beneficent rule for both parties"—citing many cases. See Bates & Co. v. Cobb (S. C.) 7 S. E. 743, 13 Am. St. Rep. 742, to the same effect.

The authorities cited by appellants no doubt correctly state the law, but under the facts in this case, as found by the trial court they do not control, and have no application. It follows from what has been said that the findings and judgment of the trial court are right, and it is, therefore, recommended that the judgment of the district court be affirmed.

DAY and HASTINGS, CC., concur.

Affirmed.

FIRST NAT. BANK OF ALBION v. SNYDER.

(Supreme Court of Nebraska. Dec. 4, 1901.)

EXEMPTION—PROCEEDS OF PARTITION SALE.

1. Proceeds of a partition sale of real estate cannot be claimed as exempt personal property against one who had and has taken proper steps in the partition proceedings to enforce a judgment lien against the land partitioned.

Commissioners' Opinion. Department No. 1. Error to District Court, Boone County; Kendall, Judge.

"Not to be officially reported."

Action by Cora O. Snyder against the First National Bank of Albion. Judgment for plaintiff. Defendant brings error. Reversed.

H. C. Vail, for plaintiff in error. M. W. McGan and J. S. Armstrong, for defendant in error.

HASTINGS, C. In a partition the plaintiff bank claimed a lien upon the share of John F. Snyder for $385 debt and costs of $25.48 upon a judgment recovered in 1893 against said Snyder. The father, Peter Snyder, died December 6, 1896, seised in fee of 205 acres of land in Boone county, where the judgment against the son was on the judgment docket, unreversed, unpaid, and in force. After the decree of distribution, which it was found impossible to carry out, the real estate was sold, and it was found that there was due from it, as John F. Snyder's share, $277.63. In the meanwhile his wife, Cora Snyder, had filed a plea of intervention, setting up the absence of her husband from the state; that she was the head of a family; that she had neither lands, town lots, nor houses subject to exemption as a homestead, and claiming this money as a personal exemption. Her claim was allowed by the trial court, and the money found to be exempt from plaintiff's claim, and was decreed to be paid to the wife. From this decree the plaintiff bank appeals.

The bank's claim is, in substance, that this real estate descended to the heirs of Peter Snyder, one of whom was John F.; that when it so descended the judgment on the records of Boone county attached to John F. Snyder's interest, and became and remained a lien upon it; and when the land was sold in the partition proceedings the proceeds, so far as they went to John F. Snyder, should have been paid in discharge of this lien. Section 805, Code Civ. Proc. No brief has been filed by the appellee, and it is impossible to see on what principle the action of the trial court can be sustained. The title to this portion of the estate certainly passed to John F. Snyder on the father's debt. The property was not a homestead, and clearly was not exempt from seizure for John Snyder's debts. It certainly became subject to the lien of this judgment, and as certainly the partition proceedings did not serve in any manner to discharge that lien. The sale in the partition proceedings

to which the plaintiff was a party must be held to have been made to enforce plaintiff's lien. The proceeds are no more subject to any claim of exemption as personalty than if they were the proceeds of an execution sale, and in the hands of the court by that means. Section 805, Code Civ. Proc.

It is therefore recommended that the decree of the trial court, so far as it provides for the payment of this money to Cora Snyder, be reversed, and the cause remanded, with instructions to enter a decree in favor of plaintiff.

DAY and KIRKPATRICK, CC., concur.

Reversed, with directions.

HARGADINE, McKITTRICK DRY GOODS CO. et al. v. KRUG et al.

(Supreme Court of Nebraska. Nov. 20, 1901.)

PRINCIPAL AND AGENT—KNOWLEDGE OF AGENT—NOTICE TO PRINCIPAL.

1. Notice to or knowledge by an agent is imputed to his principal in those cases only in which it is his duty to act upon it, or to communicate it to his employer, in the proper discharge of his trust as such agent; and it possesses that character in those cases only in which it has a direct relation to the act or business which the agent is employed to do.

Commissioners' Opinion. Department No. 3. Appeal from District Court, Box Butte County; Westover Judge.

"Not to be officially reported."

Action by the Hargadine, McKittrick Dry Goods Company and others against Harry R. Krug and others. Judgment for defendants, and plaintiffs appeal. Reversed.

Charles E. Magoon and Chas. O. Whedon, for appellants. Geo. E. Hibner and Ricketts & Wilson, for appellees.

AMES, C. During the time of the happening of the transactions hereinafter related Harry R. Krug lived at Lincoln, Neb., and his brother, Frederick V. Krug, lived at New York City, N. Y. Harry owned a tract of land situate in Box Butte county, in this state, of which he negotiated a sale to Frederick for the price of $2,500. On the 24th or 25th day of March, 1895, he applied to Mr. Charles E. Magoon, an attorney at law in Lincoln, and consulted him concerning effecting a conveyance of the land to the purchaser, saying that the latter "desired to know that the deed was properly executed according to the requirements for conveying real estate in Nebraska," and that he (Harry) had mentioned Magoon's name to his brother, who desired the latter "to make out the deed, see that everything therein was right, put it on record for him, and [after recording] send it to him at New York City." Magoon learned from Harry the correct description of the land, and wrote the deed, and after its execution sent it to Box Butte c ty to be recorded, where it was received filed on March 27th. Shortly afterw the deed, having been recorded, was retu by the county clerk through the mai Magoon, who immediately sent it in like ner to Frederick Krug in New York. receipt of the instrument, Frederick r ted the purchase price to Harry by m of a draft, payable to the order of the la The purpose of Harry in this transac which he afterwards accomplished, wa defraud his creditors out of the land c the proceeds of its sale. Knowledge of purpose came to Magoon after the deed been sent to Box Butte county for re and apparently before its return theref but certainly before it was sent to New The purchaser was and remained ignora Harry's financial condition, and of fraudulent intent, until long after he received and accepted the deed and the purchase price.

This is an action in the nature of a itors' bill by certain creditors of Harr set aside the conveyance of the land t brother, and subject it to the paymen their judgments. The suit was tried referee, who found the facts substant as above stated, except that he found Magoon was the agent of the purch Frederick V. Krug, in the transaction, out a description of the nature or purpo the agency, or the scope of the agent's ployment of the extent of his authority. a conclusion of law the referee found knowledge on the part of said Magoo facts sufficient to put him on inquiry t ing the intent of Harry R. Krug amou under the circumstances, to notice of intent, and that his principal, the defen Frederick V. Krug, is chargeable therew and he therefore recommended that the er of the petition of the plaintiffs be gra the conveyance set aside as to them, an land subjected to the payment of claims. The report was confirmed by court, and a judgment entered accordi from which the defendants appeal.

If the referee's findings of fact are plemented by the undisputed evidenc specting the scope and nature of Mag employment, the above-mentioned concl of law is erroneous. It is a harsh an vere rule which imputes to a principa knowledge possessed by his agent, and o times, as in the case at bar, punishes a nocent party for participation in a tra tion of which he was concededly igno It was adopted, not as adapted to secur ends of justice in all cases, but as a co sion to the weakness of the powers of cernment of human tribunals. The p ple is too firmly established to be sh and its wisdom is not doubted, but, as not infrequently the cause of rank inju its operation should be rigidly confine those cases to which it is strictly applic

¶ 1. See Principal and Agent, vol. 40, Cent. Dig. § 870.

Digitized by Google

The reason of the rule and some of its principal limitations are well stated by Mr. Justice Bradley in the case of The Distilled Spirits, 11 Wall. 356, 20 L. Ed. 167, as follows: "The general rule that the principal is bound by the knowledge of his agent is based upon the principles of law that it is the agent's duty to communicate to his principal the knowledge which he has respecting the subject-matter of negotiation, and the presumption that he will perform that duty. When it is not the agent's duty to communicate such knowledge, when it would be unlawful for him to do so—as, for example, when it has been acquired confidentially as attorney for a former client in a prior transaction—the reason of the rule ceases, and in such a case the agent would not be expected to do that which would involve the betrayal of professional confidence, and his principal ought not to be bound by his agent's secret and confidential information. This often happens in the case of large cities in England, where men of great professional eminence are frequently consulted. They thus become possessed, in a confidential manner, of secret trusts and other defects of title, which they could not honorably, if they could legally, communicate to subsequent clients." Consistently with this view, the knowledge of an agent, in order to be binding upon his principal, must be not only such as he possessed during the time of his employment, but such as related to his duties in such a way as that, if it was known to the principal, it would affect the conduct of the latter in doing the very act or transacting the very business which the agent was engaged to do. Now, it is clear that the knowledge of Magoon as to the intent of Harry Krug in making the conveyance in question could not have affected his conduct, or even that of his principal, in preparing a deed of the land, seeing to it that it was properly recorded, and sending it by mail to New York. He was not consulted as to the value of the land, the sufficiency of the title, the sum to be paid for it, the propriety of making the purchase or accepting the deed; nor had he any duty to perform with respect to any of these matters, and for him to have volunteered any information or advice on any of these subjects to Frederick Krug would have been merely an impertinence. Discussing this rule in Trentor v. Pothen, 46 Minn. 298, 49 N. W. 120, 24 Am. St. Rep. 225, the court, per Mitchell, J., say: "But, while this rule may be a salutary and just one if properly applied, it would be a very dangerous one if applied without proper discrimination. Hence the tendency of the courts is rather to restrict the doctrine of imputed notice, or, at least, not to extend it, but to reduce it within clear and definite principles. The rule which imputes to the principal the knowledge possessed by the agent applies only to cases where the knowledge is possessed by an agent within the scope of the agency, so that it becomes his duty to act upon it, or communicate it to his principal. As it is the rule that whether the principal is bound by contracts entered into by the agent depends upon the nature and extent of the agency, so does the effect upon the principal of notice to the agent depend upon the same conditions. Hence, in order to determine whether the knowledge of the agent should be imputed to the principal, it becomes of primary importance to ascertain the exact scope and extent of the agency. In this case it appears from the evidence that the agency was special, and limited to examining an abstract of title, and from that giving the intervener an opinion as to the sufficiency of defendant's title. In other words, it was the ordinary case of the employment of an attorney to examine the record title, and give an opinion or not whether or not it is good. We do not suppose it was ever understood that it was within the scope of the agency of an attorney, under such circumstances, to go beyond the record evidences of title, and make an inquiry of people generally for information as to facts that might affect the title." Upon the same principles are Sandberg v. Palm, 53 Minn. 252, 54 N. W. 1109; Congar v. R. R. Co., 24 Wis. 157, 1 Am. Rep. 164; and Hinton v. Insurance Co., 63 Ala. 488. The rule is that notice to an agent whose duty it is to act upon the notice, or to communicate the information to his principal in the proper discharge of his trust as such agent, is legal notice to the principal. The Fulton Bank v. The New York & Sharan Canal Co., 4 Paige, 127. It is to be observed that the breach of duty of which, in an action like the case at bar, the law conclusively presumes the agent not to have been guilty, is a breach of a duty owed by him not to third persons, but to his principal. It would seem to be a corollary of this that, if he does in fact commit such a breach, in consequence of which his principal suffers loss, the latter is entitled to call upon him to respond in damages. It is a general rule of law that "it is the duty of the agent to give to his principal reasonable and timely notice of every fact coming to his knowledge in reference to his agency, and which it may be material for the principal to know in order for the protection or preservation of his interests." Meachem on Agency, § 538, and cases cited. It apparently follows from this rule that the suppression of the knowledge of facts which were sufficient to deprive the principal of the very property which the agent was employed to assist in purchasing would fix upon the agent this liability. But, before the agent can be held to have incurred this responsibility, it must, we think, be established that he was intrusted with the conduct of some matter pertaining to the negotiation, or bargain, or agreement of the purchase itself, and that it is not sufficient that he was employed to do some act or series of acts clerical in their nature, and calling for the exer-

Digitized by Google

cise of no judgment or discretion with respect to the real business in progress.

It is therefore recommended that the judgment of the district court be reversed, and the action dismissed.

ALBERT and DUFFIE, CC., concur.

Reversed and dismissed.

NELSON, Sheriff, v. CITY OF BEATRICE.

(Supreme Court of Nebraska. Nov. 20, 1901.)

EXECUTION—SALE—REVERSAL OF JUDGMENT —RESTITUTION—WHO MAY CLAIM— ATTACHMENT.

1. Where a judgment creditor purchases property at an execution sale on a judgment which is subsequently reversed, it is his duty to make restitution of the property so purchased to the judgment debtor after the reversal of the judgment; but the right to demand restitution is confined to the judgment debtor or his privies, and cannot be invoked by an attaching creditor of such judgment debtor.

2. Where an attachment proceeding is instituted against a defendant who is a resident of this state, in a county in which such defendant does not reside and cannot be found, and makes no appearance, a levy on a judgment rendered on such proceeding is not a valid lien on the property of the defendant in the county in which such judgment was rendered.

3. Whether one in peaceful possession of personal property, and with no stronger title, may not maintain replevin against a trespasser who disturbs his possession, quære?

Commissioners' Opinion. Department No. 2. Error to District Court, Gage County; Letton, Judge.

"Not to be officially reported."

Action by the city of Beatrice against Lind Nelson. Judgment for plaintiff. Defendant brings error. Affirmed.

E. O. Kretsinger, for plaintiff in error. F. N. Prout and W. C. Dorsey, for defendant in error.

OLDHAM, C. This is an action in replevin, instituted by the city of Beatrice against Lind Nelson, as sheriff of Gage county, Neb., to recover certain personal property in the petition described. The jury was waived by the agreement of the parties, and the cause was submitted to the court upon an agreed statement of facts.

The material facts agreed upon were: That the property in dispute had been levied upon and sold under an execution on a judgment which the city of Beatrice had procured against the firm of Godfrey & Meals in the district court of Gage county, Neb.; that the city of Beatrice had purchased the property at this execution sale; that the judgment under which this execution sale was had was subsequently reversed by the Supreme Court of the state of Nebraska; that after the reversal of this judgment the Smedly Steam & Pump Manufacturing Company commenced a suit in attachment against the firm of Godfrey & Meals in the district of Gage county, Neb.; that at the tim suit was begun neither of the defen was a resident of Gage county, Neb. each was a resident of the state of Neb one of the members of the firm residi Holt county and one in Douglas co Neb.; that each of these defendants served in the attachment proceeding i county in which he resided, but neith them appeared for any purpose in th tion. It further appears from the a statement of facts that this attachmen was prosecuted to judgment in Gage co Neb., and that the city attorney of th of Beatrice filed a motion, supported b affidavit, in said suit, after judgment, a that the attached property be released alleging that it belonged to the city of trice. It also appears that this motio denied, and that no appellate proceedin taken to review the order of the court ing this motion. It also appears tha defendant sheriff levied on the prope dispute as the property of Godfrey & under this attachment proceeding.

On this agreed statement the court found the issues in favor of the plaintif the defendant brings error to this cour

The chief contention of defendant's sel is that the plaintiff, under the a statement of facts, fails to show any in itself to the chattels in dispute, and under the doctrine approved by this that "the plaintiff in replevin must re the strength of its own title, and not o weakness of the title of its adversary (the defendant) was entitled to judgme the court below. His theory is that, tiff having purchased the chattels a execution sale on a judgment in whi was the judgment creditor and Godfr Meals the judgment debtor, immediate the reversal of this judgment by th preme Court the title to the chattels so chased reinvested in the judgment de Godfrey & Meals, and that plaintiff wa tirely divested of all property interest i right of possession to the chattels in di because of the reversal of said judg We do not doubt the proposition that wh judgment creditor, or one for him, purc property at an execution sale on his ment, and his judgment is subsequentl versed and set aside by a superior cou is then incumbent on him to make restit of the property so purchased to the judg debtor, or to account to such judgment or for the value of the property so pur ed; but we think the right to demand restitution is confined to the judgment or and his privies, and that it cann invoked by the attaching creditors of judgment debtor. While this questio never been definitely settled in an adju case by this court, yet we think this r well founded in principle, and fully sust by the authority of other courts. In the

¶ 1. See Execution, vol. 21, Cent. Dig. § 797.

Digitized by Google

of McAusland v. Pundt, 1 Neb. 211, 93 Am. Dec. 358, Crounse, J., speaking for himself alone, expressed the opinion that the judgment creditor who purchases at an execution sale should take title to the property so purchased as a stranger would, entirely unaffected by a subsequent reversal of the judgment; but we think that this is extending the rule too far, and is in conflict with the great weight of authorities on this subject. McBain v. McBain, 15 Ohio St. 337, 86 Am. Dec. 478; Gott v. Powell, 41 Mo. 420; Sheldon v. Pruessner (Kan. Sup.) 35 Pac. 204; Stroud v. Casey, 25 Tex. 740, 78 Am. Dec. 556. The case of Gould v. Sternberg, 128 Ill. 110, 21 N. E. 628, 15 Am. St. Rep. 138, is well considered, and we think its reasoning governs the point at issue in this case. It says: "It is well settled in this state that when property of a defendant has been sold under judgment, afterwards reversed, to a party to such judgment, the defendant can recover it back. If the purchaser be a third party, he can recover from the plaintiff the value thereof, but the title to the property in that case is unaffected by the reversal. No one but the defendant or his assignees can take advantage of such reversal, and there can be no question but that he may waive that right, or, if he has lost nothing by the judgment, he can, of course, gain nothing by its reversal. A sale or execution based on a judgment afterwards reversed is not, therefore, we conclude, absolutely void, but voidable only, at the election of the owner of the property sold." It is not seriously contended by counsel for the defendant that the attachment proceedings set out in the stipulation gave the defendant sheriff any valid lien on the chattels in dispute. In fact, in view of the decision of this court in the case of Hoagland v. Wilcox, 42 Neb. 138, 60 N. W. 376, it would be useless to base any claim of a lien on a judgment rendered on this attachment proceeding, for it clearly appears from the record that each of the defendants were residents of the state of Nebraska at the time that this proceeding was instituted. It also appears that neither of the defendants resided in nor could be found in Gage county at the time suit was instituted, and it also appears that neither of the defendants appeared in the attachment proceeding. Under this condition of the record the judgment in the attachment proceeding was clearly void, and constituted no lien on the property of Godfrey & Meals situated in Gage county. It follows, then, that when the defendant sheriff took the property in dispute under a pretended levy on this void judgment he took it as a naked trespasser.

Defendant, however, seems to contend that the action of the district court of Gage county in overruling the motion filed after judgment in the attachment proceeding by the city attorney of Beatrice, as set out in the stipulation, was an adjudication of the city's title to the chattels in dispute, and that the city is now bound by such adjudication because it failed to prosecute error therefrom; but, as we have already seen, the judgment in the attachment proceeding was a mere nullity, and hence no one is bound by it. Again, the city was not a party to this suit, and never asked any leave to file an intervening petition to assert its rights before judgment, and the action of the trial court in refusing to hear it on motion to discharge the attached property after judgment could, in no event, amount to an adjudication of its title to the attached property.

In the case at bar it clearly appears from the stipulation on which this case was tried that each of the litigants claimed title to the chattels from the same common source; that is, from Godfrey & Meals. The city claims under its purchase at execution sale on a judgment subsequently reversed. Its possession, when taken, was a rightful possession, and its title was good and valid against all the world until the reversal of the judgment under which it held; and then, if our reasoning in this opinion is right, it was still good against every one except Godfrey & Meals and their privities, and there is no claim made that Godfrey & Meals have ever asked for a restitution of this property from the city. On the contrary, the claim of the defendant is that of a trespasser in possession, and, if the case rested solely on the question of the right of one in peaceful possession of personal property, and with no other title, we would hesitate to say that even this kind of a title would not prevail in a suit in replevin against a trespasser who had disturbed his possession. Such a doctrine as this has been asserted by high authorities in actions for the recovery of real property, where the same maxim applies that defendant relies on in this case. Christy v. Scott, 14 How. 292, 14 L. Ed. 422; Hubbard v. Little, 9 Cush. 475; Swift v. Agnes, 33 Wis. 228; Pettingell v. Boynton, 139 Mass. 244, 29 N. E. 655. If this rule applies in actions for the possession of real estate, why not in actions for the possession of chattels?

It is therefore recommended that the judgment of the district court be affirmed.

POUND and SEDGWICK, CC., concur.

Affirmed.

WELLS et al. GEYER et al.

(Supreme Court of North Dakota. Aug. 8, 1903.)

MORTGAGES — DEED AS MORTGAGE — SUFFICIENCY OF EVIDENCE — SURRENDER OF RIGHT OF REDEMPTION—VALIDITY.

1. An absolute deed and a contemporaneous agreement to sell and reconvey lands between the same parties for equal considerations, repayment to be made in future payments at 8 per cent. interest, time being of the essence of the contract to reconvey, construed, and *held* to constitute a mortgage.

Digitized by Google

2. A subsequent agreement by the mortgagor in possession to surrender possession and relinquish right to redeem, made by mutual mistake, and without adequate consideration, *held* not enforceable.

(Syllabus by the Court.)

Appeal from District Court, Grand Forks County; C. J. Fisk, Judge.

Action by Frederick B. Wells and another against Jacob Geyer and another. Judgment for defendants, and plaintiffs appeal. Affirmed.

Guy C. H. Corliss, for appellants. Campbell & Radcliffe and Templeton & Rex, for respondents.

GLASPELL, District Judge. The plaintiffs bring this action to recover the possession of certain lands, of which they claim to be owners. The defendants present, as an equitable defense, the contention that the deed by which such lands were conveyed by the defendants to the plaintiffs, and the contemporaneous agreement by which it was agreed that they were to be reconveyed to defendants, constitute merely a mortgage, which authorized them to retain possession and to redeem. The defendants have not waived their right to a jury trial upon the issue respecting plaintiffs' right of possession; still the determination of the equitable issues in favor of the defendants has put an end to the litigation, and obviates the necessity of trying the legal issues involved. Arnett v. Smith (N. D.) 88 N. W. 1037. This action was tried to the court without a jury, and is brought to this court for trial de novo, under section 5630, Rev. Codes 1899.

The defendant Geyer was in possession and farmed the lands in question as a tenant during the farming season of 1899 and for a number of years prior thereto. During the fall of that year he had so far concluded negotiations with the then owner of the land for its purchase at an agreed price of $6,000 that a deed had been executed running to Geyer and wife, and deposited in Grand Forks, to be delivered upon payment of the purchase money. The land was then worth between $8,000 and $10,000, and at the time of the trial it was probably worth $12,000. Geyer did not succeed in securing the money necessary to pay the purchase price until he applied to one McWilliams, who represented the plaintiff Wells, and the latter agreed on or about December 13, 1899, to furnish Geyer the money necessary to pay his vendors, upon the condition that Geyer and wife would execute and deliver to him an absolute deed of the premises. Wells at the same time, and as part of the same transaction, agreed to make a separate written contract to reconvey to Geyer upon payment of $5,750, with 8 per cent. interest, in certain future payments. Wells furnished $6,000 to pay the former owners, of which sum of money Geyer contributed and paid Wells $250. The former owners then conveyed to Geyer, and he conveyed to Wells, and the latter agreed to reconvey upon the payment of $5,750. Geyer failed in making payment at the time stipulated, and, time being stated as of the essence of the contract, Wells attempted to declare a forfeiture and to recover possession. After receiving notice declaring a forfeiture and to vacate the premises, Geyer and wife executed, on January 21, 1902, in consideration of the plaintiffs permitting them to occupy the said premises until April 1, 1902, an agreement in writing, wherein they admitted failure to pay a note for $500, due November 1, 1900, and other defaults, and agreed to remove from said premises and to surrender the possession thereof and to abandon the further occupancy, use, or control thereof. The defendants contend that the deed and contract to reconvey constitute a mortgage, and that the later agreement stipulating for a surrender of the premises was made by mutual mistake of law, and without consideration.

The first question for consideration is whether the original transaction between these parties constituted a loan of money merely, or an absolute conveyance of title. To declare the deed and contract to reconvey a mortgage requires a showing that is clear, satisfactory, and specific. Jasper v. Hazen, 4 N. D. 1, 58 N. W. 454, 23 L. R. A. 58; McGuin v. Lee, 10 N. D. 160, 86 N. W. 714. The evidence and circumstances in this case satisfy us beyond hesitation or substantial doubt that it was the intention of these parties to make and receive a loan of money. The transaction created the relation of mortgagor and mortgagee between Geyer and Wells. Supporting this view is the positive testimony of Geyer, who began oral negotiations about September 20, 1899, with McWilliams, the authorized agent of Wells. Geyer swears that McWilliams told him that Mr. Wells would let him have the money at 8 per cent. straight, provided he would give a deed of the farm, as security. It was understood by and between Geyer and McWilliams, who represented Wells, that the deed and contract to reconvey were intended merely as security. This evidence is uncontradicted. McWilliams does not testify, nor is his silence explained. A similar omission was said in O'Toole v. Omlie, 8 N. D. 444, 79 N. W. 849, to be significant and important. Wells claims that he bought the land. He was seeking for investment, "not only for interest, but for prospective profit." He says further: "Q. Did you expect, at the time you put your money in it, to get control of that land? A. I felt practically certain of it, although I was perfectly willing to give the man a chance to pay for his land. Mr. McWilliams, in laying the proposition before me, stated that the chances were nine out of ten in favor of my getting the land sooner or later; otherwise I should not have felt inclined to make a contract to sell the land to Mr. Geyer at identically the price which I

Digitized by Google

paid for it." In answer to another question he replies, "I felt that, if I did not get the land, I would get the interest on the money." He apparently knew that Geyer regarded the transaction as a loan. In writing to Geyer on November 14, 1899, he said, "As you know, I have volunteered to assume the indebtedness of $5,500 on your farm." Again, on November 22d, he writes that the interest must be 8 per cent. per annum, and says: "I am taking this deed as an accommodation to you, as well as an investment for myself, and I do not care, after I have carried you for four or five years, to have some other parties step in and take the deal off my hands by shading the interest rate a trifle. I am willing to carry you through until the farm is paid for in accordance with the contract, at this rate, and I cannot see how it will work any hardship against you." Before the execution of the contract for a deed, Geyer had paid Wells $250, leaving the amount to be advanced by the latter $5,750. It is plain that Wells himself considered his deed as a security at the time it was executed and delivered, however much he then may have thought that he would ultimately acquire title to the property. Such being the mutual understanding, the case is brought within the provision of section 4701, Rev. Codes 1899: "Every transfer of an interest in property, other than in trust, made only as a security for the performance of another act, is to be deemed a mortgage." In Peugh v. Davis, 96 U. S. 332, 24 L. Ed. 775, Field, J., delivering the opinion, says: "It is an established doctrine that a court of equity will treat a deed absolute in form as a mortgage when it is executed as security for a loan of money. That court looks beyond the terms of the instrument to the real transaction, and, when that is shown to be one of security, and not of sale, it will give effect to the actual contract of the parties. As the equity upon which the court acts in such cases arises from the real character of the transaction, any evidence, written or oral, tending to show this, is admissible." Under the evidence and circumstances in this case, and especially considering the particular circumstances, viz., that the value of the property was much greater than the sum of money advanced by the plaintiffs, the embarrassed financial condition of the defendants, the agreement to pay 8 per cent. interest, the deed and sale contract being contemporaneous and for the same consideration, we find no difficulty in concluding that the relation between the parties to this action is that of mortgagor and mortgagee. This conclusion finds support in the following cases: O'Toole v. Omlie, 8 N. D. 444, 79 N. W. 849; Niggeler v. Maurin, 34 Minn. 118, 24 N. W. 369; King v. McCarthy, 50 Minn. 222, 52 N. W. 648; Yankton Bldg. & Loan Ass'n v. Dowling (S. D.) 74 N. W. 438; Saunders v. Ayres (Neb.) 88 N. W. 526; Huscheon v. Huscheon (Cal.) 12 Pac. 410; Beebe v. Wis., etc., Mtg. Co. (Wis.) 93 N. W. 1103; Voss v. Eller, 109 Ind. 260, 10 N. E. 74; Clark v. Woodruff (Mich.) 51 N. W. 357; Keithley v. Wood, 151 Ill. 566, 38 N. E. 149, 42 Am. St. Rep. 265.

Plaintiffs, because of defaults in payments which were due, sought to gain possession by notice addressed to and served upon the defendants, declaring a forfeiture, and requiring defendants to vacate the premises. Acting under the mutual mistake of law that the defendants' rights could be thus forfeited, the agreement was made, as already stated, that the Geyers might remain in possession until April 1, 1902, when they should vacate, and surrender all rights and claims in or to the land. Afterward they repudiated the agreement, continued in possession, and claimed that such agreement was made by mutual mistake of law, and wholly without consideration. Both plaintiffs and defendants construed the contract to mean that the defendants' rights might be forfeited for default in the manner that was attempted. It was not understood by either of the parties that a period of redemption remained during which the mortgagee was entitled to remain in possession. The permission granted to the defendants to remain in possession until April 1, 1902, was not a consideration, since it granted no right or privilege which they did not already possess. The agreement referred to purported to surrender more than the mere possession of the mortgaged premises, which might be done without a new consideration. Section 4722, Rev. Codes. In effect it declared the transaction between the parties to be an absolute deed and conditional sale, and the latter forfeited without the right of redemption. In truth, the agreement was a mortgage that entitled the mortgagors to the possession of the mortgaged premises, and a period of one year after foreclosure sale for redemption. While the right of redemption may be surrendered, such must be the intention of the parties, and grounded on a new and adequate consideration. Equity will not recognize an agreement to waive the right of redemption, where such agreement is made simultaneously with the execution of the mortgage. In Peugh v. Davis, 96 U. S. 337, 24 L. Ed. 775, the court said: "It is an established doctrine that an equity of redemption is inseparably connected with a mortgage; that is to say, so long as the instrument is one of security, the borrower has, in a court of equity, the right to redeem the property upon the payment of the loan. This right cannot be waived or abandoned by any stipulation of the parties made at the time, even if embodied in the mortgage. This is a doctrine from which a court of equity never deviates. Its maintenance is deemed essential to the protection of the debtor, who, under pressing circumstances, will often submit to ruinous conditions, expecting or hoping to be able to repay the loan at its maturity, and thus prevent the conditions from being enforced and the property sacrificed." Accordin-

Digitized by Google

the agreement to surrender or release, made January 21, 1902, Geyer was owing Wells about $6,050, and he was granted permission to remain in possession until April 1, 1902, when he should vacate and surrender all rights in or to the mortgaged lands, including his right of redemption. The premises were ample in value to secure the debt, and, as we have seen, Wells parted with nothing of value, and Geyer received no advantage or benefit whatever. The contract is, therefore, unsupported by an adequate consideration. It has not been executed by either party. Geyer repudiated the agreement before the time came to move out, and retained possession; and Wells retained the Geyer notes until some time after such repudiation. The release was signed January 21, 1902, and on February 10th following Geyer tendered money sufficient to pay the mortgage debt. Wells held the notes until March 21, 1902, before offering to return them. He could not retain the notes and at the same time claim that defendants had executed a release and had no further rights under the contract. Svaboda v. Cheney (C. C.) 28 Fed. 500, 504; Comstock v. Brosseau, 65 Ill. 39, 43. It has been judicially determined that such transactions will be regarded with great jealousy by courts of equity, and will only be sustained if perfectly fair, and for an adequate consideration. Moeller v. Moore (Wis.) 50 N. W. 396; Odell v. Montross, 68 N. Y. 504; Baugher v. Merryman, 32 Md. 192; Bradbury v. Davenport (Cal.) 46 Pac. 1063, 55 Am. St. Rep. 92; Jones v. Franks (Kan.) 6 Pac. 789.

The trial court found that defendants did not receive adequate consideration for the execution of the waiver or relinquishment, and allowed the defendants, or either of them, to redeem. A sufficient tender of payment being made, the final judgment declares that the defendant Marian A. Geyer is the true and lawful owner of the premises in controversy, and such judgment is affirmed.

YOUNG, C. J., and MORGAN, J., concur. COCHRANE, J., having been of counsel in the court below, took no part in deciding the case; S. L. GLASPELL, Judge of the Fifth Judicial District, sitting in his stead.

MAY et al. v. CASS COUNTY et al.

(Supreme Court of North Dakota. June 24, 1903.)

CONSTITUTIONAL LAW—OBLIGATION OF CONTRACT—COUNTY DRAINAGE BONDS — SALE — SUBSEQUENT AMENDMENT OF STATUTE—EFFECT.

1. Rights which have become vested under a contract resting for its validity upon a statute cannot be impaired or annulled by a repeal of such statute.

2. The county commissioners of Cass county, pursuant to authority conferred by section 1474, Rev. Codes 1899, resolved to issue 20-year drainage bonds to pay the cost of constructing a certain drain which had theretofore been regularly established and constructed under the provisions of the drainage law, and entered into a contract to sell said bonds. The bonds were thereafter executed and delivered to the purchaser according to his contract of purchase, and the full amount of the purchase price paid. Before they were actually signed and delivered, however, section 1474, Rev. Codes 1899, was amended to the effect that bonds issued thereunder should mature in not less than three nor more than seven years. It is *held*, in an action to cancel and declare void the bonds so issued and delivered, that the amendment was wholly ineffectual to destroy the rights of the purchaser of said bonds, or to abrogate the authority of the board of county commissioners to issue and deliver them according to contract.

(Syllabus by the Court.)

Appeal from District Court, Cass County; Charles A. Pollock, Judge.

Action by C. B. May and others against Cass county and others. Judgment for defendants, and plaintiffs appeal. Affirmed.

J. E. Robinson, for appellants. Emerson H. Smith and Morrill & Engerud, for respondents.

YOUNG, C. J. The plaintiffs instituted this action in the district court of Cass county for the purpose of canceling certain 20-year drainage bonds issued by the county commissioners of that county to defray the cost of constructing Argusville drain No. 13, and to enjoin the officers of that county from making assessments to pay the same. The alleged illegality of the bonds in question is based upon the fact that prior to their execution and delivery, and on July 1, 1901, the law authorizing the issuance of 20-year bonds (section 1474, Rev. Codes 1899) was amended, and the time for which such bonds might be issued was reduced from 20 years to 7 years. The question involved is one of power, and arises upon the plaintiffs' demurrer to the defendants' answer. The answer alleges, in substance, that the drain in question was duly established and completed: that the board of drain commissioners on October 4, 1900, filed their written report showing that all proceedings with reference to its construction and completion had been duly and regularly had and taken, and that the total cost of the same was $40,996.97; that on said date the board of county commissioners adopted a resolution to the effect that it was for the best interests of all persons liable for the cost of said drain that bonds should be issued under and pursuant to the provisions of section 1474, Rev. Codes 1899, for the purpose of paying the expense of constructing and completing said drain, and resolved that bonds in said sum should be issued under and by virtue of said section for the purpose mentioned, and further directed the county auditor to advertise for bids for such bonds; that the county auditor, in compliance with said resolution, did advertise for bids for the purchase of said bonds; that the bid of Close Bros. & Co. was the highest and best bid, and the same was accepted on October 22, 1900; that their

Digitized by Google

bid was to the effect that they would purchase all of said bonds at a premium of $275, and pay the cost of preparing the bonds; that on the same day the county commissioners duly passed and adopted a resolution that bonds should be issued under the provisions of section 1474, Rev. Codes 1899, for the total sum of $40,996.97, to said Close Bros. & Co., and payable to them or order, dated November 1, 1900—one-third of the principal of said bonds to be payable 10 years from their date, one-third payable 15 years from their date, and the remaining 20 years from their date—and further directed the county auditor of Cass county to extend upon the tax lists against the lands liable for the cost of said drain an assessment one-twentieth of the principal of said bonds each year; that assessments have been made and extended in pursuance of said resolution; that thereafter, and before the said bonds could be prepared, signed, and issued, an action was commenced by the plaintiffs in this action for the purpose of declaring the proceedings for the construction of said drain illegal and void, and to enjoin the levying of assessments against their lands to defray the cost of constructing the same, and to enjoin the issuance of drainage bonds; that in said action an order was obtained and served enjoining and restraining the county commissioners and county auditor from proceeding with the issuance of said bonds and with the enforcement of the assessments, which said temporary injunctional order remained in force and effect from the 5th day of January, 1901, until July 29, 1901, on which last-named date it was dissolved by a final judgment dismissing the action upon the merits; that thereafter, and on the 1st day of November, 1901, bonds were duly executed and delivered by the proper officers to Close Bros. & Co. in the amount and form as provided by the resolution of the board of county commissioners made on October 22, 1900; that the said Close Bros. & Co., on receipt of said bonds, paid to the treasurer of Cass county the full amount of said bonds and $275 in addition thereto, in accordance with their bid as accepted by the board of county commissioners. The plaintiffs demurred to the answer upon the ground that "it does not state facts sufficient to constitute a defense, and it shows affirmatively that the bonds mentioned in said answer were issued without any authority of law." The demurrer was overruled. Plaintiffs stood upon their demurrer, and judgment was entered dismissing the action. The appeal is from the judgment, and error is assigned upon the ruling upon the demurrer.

The demurrer was properly overruled. The validity of chapter 51, p. 65, of the Laws of 1895 (sections 1444–1474, incl., Rev. Codes 1899), known as the "Drainage Law," and under which the drain in question was constructed and the bonds involved in this action were issued, was challenged by these plaintiffs in a former action, and was sustained by this court. Erickson v. Cass County, 11 N. D. 494, 92 N. W. 841. The question now presented relates to the effect of chapter 39, p. 49, of the Laws of 1901, which amended section 1474, Rev. Codes 1899. Prior to its amendment, section 1474 authorized county commissioners to issue drainage bonds maturing in their discretion in "not exceeding twenty years from the date thereof." The section as amended on July 1, 1901, provides that bonds issued thereunder "shall be payable in not less than three and not more than seven years from the date thereof." The answer in this case shows that the board of county commissioners decided to issue 20-year bonds to pay the cost of constructing the drain in question, that it advertised for bids for such bonds, and that on October 22, 1900, the bid of Close Bros. & Co. for all of said bonds was duly accepted. All of these acts took place before the amendatory act, chapter 39, p. 49, of the Laws of 1901, took effect, and at a time when the board had lawful authority to issue and sell 20-year bonds. The bonds were not signed and delivered, however, until November 1, 1901, which was after the amendment had taken effect. The contention of plaintiffs' counsel is that the power of the board to issue 20-year bonds was entirely revoked by the amendment, and that, as these bonds were not actually signed and delivered until November 1, 1901, their issuance and delivery was without authority, and that they are, therefore, void. We cannot agree to this conclusion. It is not necessary to a decision of this case to determine whether chapter 39, p. 49, of the Laws of 1901, was intended to operate prospectively only, and thus apply merely to drains thereafter established, as counsel for defendants contend; or whether, as counsel for plaintiffs contends, the Legislature intended by the amendatory act also to deprive the county commissioners of authority to issue 20-year bonds to pay the cost of constructing drains theretofore established and completed. We will assume for the purpose of this case that it was the legislative intent to entirely abrogate the authority of the county commissioners to issue 20-year bonds. Still we are compelled to hold that the bonds involved in this action are valid, for the reason that prior to the taking effect of the amendment rights had become vested under the law as it then existed, which the Legislature could not destroy. The owners of the land liable for the cost of the drain had caused its construction in reliance upon the law as it was prior to the amendment, and under which the county commissioners were authorized, in their discretion, to extend their assessments over a 20-year period. Contracts for the construction of the drain had been let and performed, involving heavy financial obligations, which could only be discharged under the terms of the law then in force. Furthermore, the county commission-

Digitized by Google

ers had entered into a valid contract for the sale of the bonds to Close Bros. & Co.; a contract which was mutually binding upon both parties. It bound the officers of the county to sign and deliver the bonds, and also to levy assessments necessary to pay them. Close Bros. & Co. were bound by their bid and its acceptance to take the bonds, and pay for them in accordance with their bid. The duty of the county commissioners to issue and deliver the bonds to Close Bros. & Co. arose upon the acceptance of their bid. And under such circumstances the purchasers had a right to compel the performance of the ministerial duty of signing and delivering the bonds by mandamus. Smith v. Bourbon County, 127 U. S. 105, 8 Sup. Ct. 1043, 32 L. Ed. 73; Page v. Hardin, 8 B. Mon. 648; Douglas v. Town of Chatham, 41 Conn. 211; New Haven, M. & N. Ry. Co. v. Town of Chatham, 42 Conn. 465; Shelby County v. C. & O. Ry. Co., 8 Bush, 209; Flag v. The Mayor, 33 Mo. 440; Justices v. P. W. & K. R. Co., 11 B. Mon. 143; Roberts v. City of Paducah (C. C.) 95 Fed. 62. When the bid of Close Bros. & Co. was accepted, the board of county commissioners had the undoubted authority to issue and sell 20-year bonds. and that power included the right to make a contract to sell and deliver them. The subsequent signing and delivery of the bonds was merely the performance of this contract. The law in force at that time authorized the contract which was made, and was a part of it. It was such a contract as could not be impaired or annulled by subsequent legislation. Moultrie County v. Savings Bank, 92 U. S. 631, 23 L. Ed. 631; In the Matter of the Protestant Episcopal School, etc., 58 Barb. 161; Coffin et al. v. Indianapolis (C. C.) 59 Fed. 221; Smith v. City of New York, 10 N. Y. 504; 1 Dillon on Munic. Corporations (4th Ed.) § 470; McCauley v. Brooks, 16 Cal. 11; Creighton v. Pragg, 21 Cal. 117; James v. Dubois, 16 N. J. Law, 285; Town of Belvidere v. Warren R. R. Co., 34 N. J. Law, 193; Western Saving Fund Society v. Philadelphia, 31 Pa. 185; Cooley on Const. Lim. (5th Ed.) 331; Smith v. Board, 127 U. S. 105. 8 Sup. Ct. 1043, 32 L. Ed. 73; Sutherland on Stat. Const. § 480. See, also, Fisher v. Betts (decided at the present term) 96 N. W. 132, and cases cited. It is possible that the amendatory act should be construed as prospective, and as having no reference whatever to rights and liabilities existing when it took effect. The courts have adopted this rule of construction in many cases with the evident purpose of relieving lawmakers from the charge of attempting an unconstitutional invasion of vested rights. "The rule is that a statute affecting rights and liabilities should not be construed so as to act upon those already existing. And it is the result of the decisions that, although the words of a statute are so general and broad in their literal extent as to comprehend existing cases, they must yet be so construed as to be applicable only to such as may therea arise, unless the intention to embrace a clearly expressed." In the Matter of Protestant Episcopal School, etc., 58 B 161, and cases cited; Sutherland on S Const. § 481; Endlich on Inter. of Sts 271. In this case we have assumed tha was the legislative purpose to absolutely peal the authority of the county commiss ers to issue 20-year bonds. Nevertheless conclude that the attempted repeal was v out effect as to the bonds in suit, as the chasers' right thereto had become vested fore the amendment took effect, and c not be impaired by subsequent legislative tion.

Counsel for appellants also claims "the statute [section 1474, Rev. Codes 1 is not constitutional." He contends county commissioners cannot be author to issue bonds against a drainage dist We know of no constitutional restriction on the power of the Legislature which w prevent that body from conferring county commissioners the authority give this act. No such provision is pointed or suggested by counsel.

Judgment affirmed. All concur.

HERTZLER v. CASS COUNTY et a

(Supreme Court of North Dakota. July 1903.)

TAXATION—REAL ESTATE—PERSONAL OBL TION—ASSESSMENT IN NAME OF OWNER VALIDITY—DIRECTORY PROVISIONS.

1. A tax imposed upon real estate purs to the provisions of chapter 126, p. 256, o Laws of 1897, does not create a personal gation against the owner, but is mere charge against the land.

2. The provisions of said chapter requ real estate to be assessed in the name o owner are directory.

3. Construing section 81 of said cha which provides that "no sale of real estat taxes shall be considered invalid on accou the same having been charged in any name than that of the rightful owner," in nection with other provisions of the act, *held*, that an assessment of real estate i name of another than the owner does not der the tax void.

(Syllabus by the Court.)

Appeal from District Court, Cass Cou Charles A. Pollock, Judge.

Action by John Hertzler against the co of Cass and others. Judgment for def ants, and plaintiff appeals. Affirmed.

Newman, Spalding & Stambaugh. for pellant. Emerson H. Smith and Edw Engerud, for respondents.

YOUNG, C. J. This is an action to q title to 160 acres of land situated in county. The plaintiff alleges that he h lien thereon, consisting of a mortgage, which a judgment of foreclosure has entered; that the defendants claim ce estates or interests in or liens or in

Digitized by Google

brances upon the same adverse to the plaintiff; and prays that they may be required to set forth their claims, to the end that their validity and priority may be determined, and that title may be quieted in the plaintiff. L. R. Freeman, R. E. Fleming, the Richards Trust Company, and Cass county were made defendants. The three defendants first named made default. Cass county served notice of appearance, but did not answer within the statutory period. Judgment was entered by default quieting title in the plaintiff as against the three defendants first named, and also declaring that the defendant Cass county had no interest in or lien upon the premises for taxes assessed and levied for the years 1900 and 1901. Thereafter the state's attorney of Cass county, upon his affidavit, procured an order to the plaintiff to show cause why the judgment should not be vacated. The application to vacate the judgment was granted. The plaintiff then obtained leave to serve and file a supplemental complaint, alleging that since the commencement of the action the county of Cass claims to have acquired a new and additional lien upon the premises adverse to the plaintiff, and asked that it be required to set the same forth, that its validity and superiority might be determined. Cass county answered, alleging that the premises in question were duly and regularly assessed for taxation in the years 1900 and 1901, and taxes levied thereon for said years; that the same are still of record against said land, and are unpaid, and constitute liens upon the land; and asks that the taxes for both of said years be adjudged and decreed to constitute liens upon said premises. The trial court made and filed findings of fact, and as conclusions of law found that the premises were duly and lawfully assessed in the years 1900 and 1901, and that the taxes for said years constitute valid liens thereon, and that the defendant is entitled to a judgment dismissing the plaintiff's complaint as to the defendant Cass county. From the judgment so entered the plaintiff appeals.

Appellant claims that the taxes for the years 1900 and 1901 are void for want of a valid assessment. It is conceded that in both years the land was assessed to L. R. Freeman, and that he was not the owner of the land. Does this fact render the assessment void? We are agreed that it does not. The assessments were made under chapter 126, p. 256, Laws 1897. A real estate tax imposed under this act does not become a personal obligation against the owner, but is merely a charge against the land itself. In other words, the entire tax proceedings as to real estate are in rem, and not in personam. There is no provision in our state Constitution which requires that real estate shall be assessed in the name of the owner. It was entirely competent, then, for the Legislature to provide that real estate should be assessed without any reference whatever to the name of the owner; that is to say, by any such description or method as would have been legally adequate to convey either actual or constructive notice to the owner (Castillo v. McConnico, 168 U. S. 674, 18 Sup. Ct. 229, 42 L. Ed. 622), and to declare that land "shall be chargeable with taxes, no matter who is the owner, or in whose name it is assessed and advertised, and an erroneous assessment does not vitiate a sale for taxes" (Witherspoon v. Duncan, 4 Wall. 217, 18 L. Ed. 339). Section 179 of the state Constitution provides that "all property * * * shall be assessed * * * in the manner prescribed by law." This section gives the taxpayer a constitutional right to have the mandatory provisions of the law regulating assessments complied with. Are the provisions of the act of 1897, in so far as they require an assessment of real estate to be made in the name of the owner, mandatory? Counsel for appellant contend that they are, and that there can be no valid assessment of real estate unless made in the name of the owner. We are of a contrary opinion. It will be noted at the outset that the act of 1897 does not, in express language, command assessors to list real estate in the name of the owner, as did section 1548, Comp. Laws, which was construed in Sweigle v. Gates, 9 N. D. 538, 84 N. W. 481. While it is true that the assessor is not specifically directed to list real estate in the name of the owner, there are certain other provisions contained in the act which make it clear that it was intended that he should do so. For instance, section 31 requires the county auditor to prepare and deliver to the assessor assessment books "showing the name of owners if to him known, and if unknown so to state." Section 106 provides for a notice of expiration of redemption "to the person in whose name such lands are assessed." Both of these sections assume that the assessment of real estate is to be in the name of the owner. It is quite clear, however, that the use of the owner's name under this act is essentially for the guidance of the taxing officers, and for the purpose of securing system in the tax proceedings; and that it is not essential to a valid assessment. The requirement is, therefore, not mandatory. The rule is that regulations designed to secure order, system, and dispatch in tax proceedings, and by a disregard of which the rights of parties interested cannot be injuriously affected, are not usually regarded as mandatory, unless accompanied by negative words importing that the act required shall not be done in any other manner or time than as designated. French v. Edwards, 13 Wall. 506, 511, 20 L. Ed. 702; Cooley on Tax'n (2d Ed.) 233. This act contains no words importing that the assessment shall not be made in any other manner than to the owner. The reverse is true. Section 78 enumerates the only grounds which, according to the legislative intent, will defeat a tax sale. The failur-

Digitized by Google

sess in the name of the owner is not one of the grounds. The fact that the Legislature did not intend that the failure to assess real estate in the name of the owner should be fatal to the tax is also shown by section 1241, Rev. Codes, which authorizes a change and correction of the name after the assessment roll has been completed. There is a further provision, however, which places the immateriality of an error in assessing real estate to another than the owner beyond question. Section 81 of this act, in referring to tax sales, expressly provides that "no such sale of real estate for taxes shall be considered invalid on account of the same having been charged in any other name than that of the rightful owner." This provision has been in force in Minnesota since 1874, and, while it refers to the avoidance of the tax sale, it applies generally to the charge of the tax. Jaggard on Tax'n, 364. Statutes substantially similar are now in force in many states, and they are uniformly construed as rendering an error in naming the owner of no consequence. Lake County v. Sulphur Bank Quicksilver Min. Co., 66 Cal. 17, 4 Pac. 876; Landregan v. Peppin, 86 Cal. 122, 24 Pac. 859; Haight v. The Mayor, 99 N. Y. 280, 1 N. E. 883; Haight v. The Mayor, 32 Hun, 153; Petrie Lumber Company v. Collins, 66 Mich. 64, 32 N. W. 923; Hill v. Graham, 72 Mich. 659, 40 N. W. 799; Bradley v. Bouchard, 85 Mich. 18, 48 N. W. 208; Michigan Dairy Company v. McKinlay, 70 Mich. 574, 38 N. W. 469; McQuade v. Jaffray, 47 Minn. 326, 50 N. W. 233; Cobban v. Hinds (Mont.) 59 Pac. 1; Merrick v. Hutt, 15 Ark. 332; Kinsworthy v. Mitchell, 21 Ark. 145; Garibaldi v. Jenkins, 27 Ark. 453; Cooper v. Jackson, 71 Ind. 244; Stilz v. City of Indianapolis, 81 Ind. 583; Schrodt v. Deputy, 88 Ind. 90. In McQuade v. Jaffray, supra, in the original and published lists, which served as the basis for a tax judgment, the name of the owner was given as "E. S. Jeffray" instead of "E. S. Jaffray," which was the correct name. It was assumed in the opinion in the case just referred to that the land was assessed in the same way. The Minnesota statute required "that the name of the owner shall be given if known, and if unknown, it shall be so stated." Mitchell, J., in denying the contention that the omission of the owner's name was fatal to the judgment, used the following language, which we think is applicable to the statute under which the taxes here in question were assessed: "Under our statute proceedings to enforce the collection of real estate taxes are purely in rem. They are against the land, and not against the owner. It is elementary that no reference to the name of the owner is necessary in proceedings in rem. It is, however, a common practice in such proceedings to give the name of the owner, if known, for frankness' sake, to increase the chances of his attention being called to the notice. The provisions of our statute on the subject are but declaratory of this established pra and are to be construed as merely dire The essential thing in such proceedin the description of the res (the land), an is complete without the name of the ow Counsel for appellant rely upon Swei Gates, 9 N. D. 538, 84 N. W. 481. In case we held that the requirement of s 1548, Comp. Laws, with respect to l real estate in the name of the owner mandatory, and that a failure to c therewith rendered the assessment The case is not in point. The statute under consideration differs in two imp particulars from that under which th sessments here in question were made. tion 1548, Comp. Laws, expressly re that: "If the name of such owner be k to the assessor, the property shall be as in his, her or their name. If unkno the assessor the property shall be as to unknown owners." A further and i tant difference to be noted is that und Compiled Laws a real estate tax beca personal charge against the owner, an merely a charge upon the land. The a of a curative statute was also noted i Swelgle Case, in the opinion formulat Justice Wallin in the following lang "The Legislature had authority to decl statute that an error in listing for ta as to the name of the owner, or any om in this respect, should not defeat the a ment, but no such curative statute e when the assessment of 1887 was m Roberts v. Bank, 8 N. D. 504, 79 N. W. is also cited in support of appellant's tention. This case cannot be said to b trolling. In that case the court said is clear that the statute required the la be assessed in the name of the own known. Such statutes are mandatory compliance therewith is jurisdictional." court then had under consideration ch 132 of the Laws of 1890, and not the re law of 1897. When the assessment inv in the Roberts Case was made, section Rev. Codes 1895, authorizing personal ments for real estate taxes was in force the court's attention was not called t tion 75, c. 132, p. 405, of the 1890 act, in fact contained the same curative sions as to assessments of real estate to others than owners as are found i tion 81 of chapter 126, Laws 1897, quoted. The validity of the taxes inv in this action depends wholly upon th visions of chapter 126 of the Laws of under which they were assessed. Fo reasons already given, it is clear to us the provisions of this act, so far as th quire that the assessment of real estate be in the owner's name, are directory that an assessment of real estate in the of another than the owner, the asses being otherwise regular, does not inva the tax.

Appellant also assigns error upon an

Digitized by Google

of the district court opening the default judgment and in permitting Cass county to answer. The propriety of the order cannot now be considered. An amended abstract filed by respondent shows that plaintiff appealed from the order vacating the judgment, and that the order was affirmed by this court. The propriety of the order is not, therefore, open to review upon this appeal.

Judgment affirmed. All concur.

OLSON et al. v. SHIRLEY et ux.*

(Supreme Court of North Dakota. May 28, 1903.)

JUSTICES OF THE PEACE—APPEAL—DISMISSAL—DEMURRER—EXCESS OF PARTIES.

1. It is not error for the district court to deny a motion to dismiss an appeal from justice court taken upon questions of law only, when the appeal has been regularly taken and perfected, and the only grounds of the motion relate to alleged irregularities in the proceedings in justice court, which do not affect the jurisdiction of the district court over the appeal.

2. A demurrer for defect of parties is proper when the pleadings show there is a deficiency of parties, but it is not a proper method of attack for an excess of parties. Accordingly, *held* that, where the only claim is that too many parties have been joined, a demurrer upon this ground was properly overruled.

3. Under section 6771a, Rev. Codes 1899, which regulates appeals from justice court taken upon questions of law only, and provides that when the decision of the district court reopens the case for trial the trial shall be had in the district court, it is *held* that the effect of a reversal of the justice's judgment dismissing plaintiff's action was to reopen the case, and that the district court did not err in hearing the case and rendering judgment upon the merits.

(Syllabus by the Court.)

Appeal from District Court, Ward County; John F. Cowan, Judge.

Action by Sophia Olson and another against John C. Shirley and wife. Judgment for plaintiffs, and defendants appeal. Affirmed.

Le Sueur & Bradford, for appellants. James Johnson, for respondents.

YOUNG, C. J. This case is before us on the defendants' appeal from a judgment entered against them by the district court of Ward county. The action was brought in justice court to recover the possession of certain rooms in a dwelling house situated in the city of Minot, and for $75 delinquent rent. Two continuances were granted by the justice upon plaintiffs' motion and over defendants' objection. At the date of the hearing fixed at the last adjournment, the justice, on defendants' motion, entered judgment dismissing the action upon the ground that he had lost jurisdiction by the adjournment. In due time the plaintiffs appealed to the district court upon questions of law only. When the case was reached in the district court, the defendants made a motion to dismiss the appeal upon five grounds, all of which related to certain alleged jurisdictional defects in the proceedings in justice court. It was not alleged that the appeal had not been properly taken and perfected, or that the record had not been transmitted by the justice, nor did it state any other ground affecting the right of the district court to hear and determine the questions of law presented by the plaintiffs' appeal. The motion was denied. Thereafter the defendants interposed a demurrer to the complaint upon the ground that there is a defect of parties plaintiff and defendant. The further proceedings are recorded in the abstract as follows: "The demurrer overruled, and defendants moved for leave to answer, which motion was granted, after which defendants filed their answer, and to the counterclaim pleaded in said answer plaintiffs demurred. The defendants asked leave to withdraw said answer, and said leave to withdraw was granted. Defendants being in default, plaintiffs offered proof before the court in support of their claim." Thereafter judgment was entered for plaintiffs for the possession of the premises in question and the amount demanded for rent, as prayed for in their complaint, from which judgment this appeal is taken.

It is urged by counsel for defendants that the district court erred in denying their motion to dismiss the appeal. In this ruling, in our opinion, no error was committed. All of the several grounds upon which the motion was based went to the proceedings in the justice court, and none of them affected the jurisdiction of the district court to hear and determine the plaintiffs' appeal, which, concededly, was regularly taken and perfected. This being true, it would have been error to have granted the motion, and thus deprive plaintiffs of the right to have the action of the justice in dismissing their case reviewed in the district court.

It is further urged that the court erred in overruling the defendants' demurrer. No error was committed in this ruling. The demurrer was on the ground that there is a defect of parties. There is, in fact, no defect of parties, and it is not claimed that there is. The defendants' contention is that there are too many parties. That question is not reached by this demurrer. "A defect of parties for which a demurrer is allowed is a deficiency, not an excess, of parties." Bliss on Code Pleading (2d Ed.) § 411. "That is, the defendant cannot demur upon the ground that there are too many plaintiffs or defendants, but may do so if the petition shows that others should be joined. It must be a defect, and not a misjoinder." Maxwell on Code Pl. § 372. See, also, Lewis v. Williams, 3 Minn. 151 (Gil. 95); Nichols v. Randall, 5 Minn. 304 (Gil. 240).

It is also urged that the district court, upon reversing the judgment of dismissal of the justice court, should have remanded the

*Rehearing denied July 30, 1903.

¶ 2. See Parties, vol. 37, Cent. Dig. §§ 146, 151.

Digitized by Google

case to the justice for further proceedings, and that the entry of judgment by the district court was, therefore, erroneous. Coughran v. Wilson (S. D.) 63 N. W. 774, and Lindskog v. Schouweiler (S. D.) 80 N. W. 190, are cited as sustaining this view. The cases are not in point. The cases cited were decided under section 6136, Comp. Laws Dak., which requires that the district court shall, upon an appeal from the justice court upon questions of law only, "when necessary and proper, order a new trial." The statute referred to does not, in express language, state where the new trial is to occur, whether in justice or in district court; and, by construction, it was held to require the trial to be in the justice court. The section under which this appeal is taken (section 6771a, Rev. Codes 1899) is altogether different, and leaves no room for construction. It provides that: "When the decision of the district court reopens the case for the trial of an issue of fact, the decision shall direct that the action be retained and placed on the calendar of the court for trial accordingly as in other cases." The necessary effect of the decision of the district court upon plaintiffs' appeal in reversing the judgment of dismissal was to reopen the case for trial upon the merits, and the plain language of the statute requires the trial to be in the district court, instead of being remanded to the justice court. See Grovenor v. Signor, 10 N. D. 503, 88 N. W. 278.

Error is not assigned upon the court's order reversing the judgment of dismissal and reopening the case. We must assume, therefore, that it was proper. The only errors presented are those which we have considered.

It follows that the judgment must be affirmed, and it is so ordered. All concur.

NICHOLS et al. v. ROBERTS.*

(Supreme Court of North Dakota. July 1, 1903.)

TAXATION — PENALTY — SALE OF LANDS — TREASURER'S COMMISSION — REPEAL OF STATUTE — EXCESSIVE AMOUNT — APPEAL — HEARING—ADMISSIBILITY OF EVIDENCE.

1. Under chapter 119, p. 164, Laws 1889, a 5 per cent. penalty is to be added to the amount of the tax, with accrued interest thereon, on June 1st.

2. After June 1st that law allowed interest at 1 per cent. per month to be computed on the sum total of the tax, penalty, and interest unpaid on June 1st, up to the date of sale.

3. Chapter 50, p. 151, Laws 1887, did not repeal that portion of section 1417, Comp. Laws Dak., which gives treasurers 5 per cent. commission on sale of lands for delinquent taxes.

4. Section 1417, Comp. Laws Dak., authorizes a treasurer to charge 5 per cent. commission on sale of lands, and a sale is not made for an excessive amount which includes such commissions in the amount for which the land is sold. On this point Lee v. Crawford, 88 N. W. 97, 10 N. D. 482, overruled.

5. The fees legally chargeable on sales made in 1889, under section 1417, Comp. Laws Dak., considered, and the sale is *held* not made for an excessive amount.

6. Affidavits cannot properly be considered in this court to determine the disposition to be made here of a case on an appeal from a judgment.

(Syllabus by the Court.)

Appeal from District Court, Cass County; W. S. Lauder, Judge.

Action by George E. Nichols and William C. MacFadden against Matilda M. Roberts. Judgment for defendant, and plaintiffs appeal. Reversed.

Morrill & Engerud, for appellants. J. E. Robinson, for respondent.

MORGAN, J. This is an action brought to quiet title to a certain lot in the city of Fargo. In the complaint the plaintiffs allege their ownership in fee of the lot. In the answer the defendant alleges, by way of counterclaim, that she is the absolute owner of said lot by virtue of a patent from the United States. In a reply, the plaintiffs allege ownership of said lot by virtue of a tax deed issued by the auditor of Cass county on the 13th day of June, 1902, pursuant to a sale of said lot made in November, 1889, for delinquent taxes of the year 1888. The trial court found that the deed under which the plaintiffs claim was void, for the reason that it was based on a sale for taxes which were in excess of the amount that said lot could be legally sold for under the law then in force. This appeal is from the judgment entered pursuant to such findings.

The assignments of error are: (1) That the conclusions of law and the judgment entered are not warranted by the findings of fact. (2) That the court erred in its conclusions that the sale was for an excessive amount.

The sale was made in 1889 for $38.57. The amount of the tax levied in 1888 was $31.61. When the sale was made, penalties and interest were chargeable under chapter 119, p. 164, Laws 1889. That law provides that the taxes of 1888 "shall become delinquent on the first Monday of February, 1889," and shall draw interest at the rate of 1 per cent. per month from the date of such delinquency until the 1st day of June, 1889, at which latter date there shall be added as a penalty 5 per cent. upon the amount so remaining unpaid, and 1 per cent. per month thereafter until paid, to be added on the 1st day of each succeeding month. Respondent in her argument claims that this law does not authorize the 5 per cent. penalty to be charged on the tax with interest added, but should be charged on the tax only. The reading of the section shows a contrary intention. The amount "so remaining unpaid" when the penalty is to be added is clearly the tax and interest added together. There is no room for other construction.

This statute is also authority for comput-

*Rehearing denied July 23, 1903.

¶ 6. See Appeal and Error, vol. 3, Cent. Dig. § 3625.

Digitized by Google

ing interest upon the sum total of the tax, interest, and penalty from June 1, 1889, when they are added together, until the time of sale on November 4th. No other rule of computation could be followed and give the language of the statute force. Counsel claims that the method of computing penalties and interest contended for by him was followed by this court in Wells County v. McHenry, 7 N. D. 268, 74 N. W. 241. In that case the precise question here involved does not seem to have been raised, considered, or decided. Computing the amount due on this tax at the day of the sale on November 4, 1889, in accordance with the law of 1889, and adding to the sum total thereof 10 cents for advertising, 5 per cent. treasurer's commission on the sale, and 50 cents for a certificate of sale, a sum total is produced exactly equal to the amount for which the lot was sold. There was, therefore, no excess in the sum for which the lot was sold, and the conclusion that there was a sale for an excessive amount is not sustained. The trial court, in holding the sale to have been made for an excessive amount, relied on the decision of this court in Lee v. Crawford, 10 N. D. 482, 88 N. W. 97. In that case both court and counsel overlooked section 1417 of the Compiled Laws (Dak.) providing for a 5 per cent. commission to be charged by the treasurer in making the sale. What was there said about the sale being for an excessive amount in no way affects the correctness of that decision, as the decision was based on other grounds.

It is further contended by the respondent that section 1417 of the Compiled Laws (Dak.) was repealed by chapter 50, p. 151, Laws 1887. Under the latter law, county treasurers received a salary in lieu of the fees theretofore allowed them by statute. They are to account under that law for all fees received by them, and are paid a regular salary by the county. That law only changes the disposition to be made of the fees legally chargeable by the treasurer for official acts. The repealing clause of this law is not general, but is confined to such matters as are inconsistent with the provisions of the 1887 enactment. This act provides for an accounting for all fees received by the treasurer, and provides a penalty if he fails to charge and collect the fees allowed by law for his services. In place of this law containing provisions as to charging fees for services inconsistent with former provisions, it implies that former fees are to be charged in all cases. The claim that section 1417, Comp. Laws Dak., was repealed by the law of 1887, is therefore untenable. The findings of fact show the amount of the tax assessed and the sum for which the property was sold. From these two facts found, the question whether the lot was sold for an excessive amount becomes a question of law, and is not a question of fact.

It is urged that the charge of 50 cents for a certificate of sale is an excessive charge by the treasurer, and avoids the sale for that reason. The claim is that it is not shown nor found that the purchaser of said lot was not a purchaser of other lots at the same sale, and that such other sales should have been included in one certificate, and this charge apportioned on all the lots under section 1627, Comp. Laws Dak. The findings show that this one lot was sold and nothing more. We cannot indulge in presumptions as to what could or might have been done in any case on matters of fact. If the claim be a meritorious one, it cannot be considered in this case.

Counsel for respondent presents an affidavit referring to the merits of the action, and in view thereof asks that the case be remanded for a new trial in case the judgment is to be reversed by this court. The application cannot be considered. The record only can be considered in disposing of cases in this court. Matters extraneous to the record, based on affidavits or any new evidence, will not control the disposition here made of appeals.

The judgment is reversed, and the district court is directed to enter judgment granting the relief demanded in the complaint. All concur.

NELSON v. GRONDAHL.*

(Supreme Court of North Dakota. June 5, 1903.)

NOTE — INDORSEMENT — FRAUD — ACTION AGAINST INDORSER—DEFENSE — SUFFICIENCY OF EVIDENCE—JUDGMENT NON OBSTANTE VEREDICTO—MOTION FOR NEW TRIAL—WAIVER.

1. Unless it is shown that injury or damages resulted or must result from the making of fraudulent representations which induced the making of a contract, such representations do not constitute a defense to such contract.

2. Evidence examined, and found not sufficient to sustain the allegations of fraud as a matter of fact.

3. A motion for judgment notwithstanding the verdict will not be sustained in a case where there is an issue for the jury to pass upon under the evidence.

4. By failing to unite a motion for a new trial with a motion for judgment notwithstanding the verdict, the right thereafter to make a motion for a new trial in the usual statutory way is not waived.

(Syllabus by the Court.)

Appeal from District Court, Cass County; Charles A. Pollock, Judge.

Action by Peter Nelson against Olaf L. Grondahl. Judgment for defendant, and plaintiff appeals. Reversed.

Turner & Lee; for appellant. Benton, Lovell & Holt, for respondent.

MORGAN, J. This action is brought by the plaintiff, as owner of a note for $250 made by one Paul Steffes to the defendant, and by him indorsed to the plaintiff. Two

*Rehearing denied July 23, 1903.

¶ 4. See New Trial, vol. 37, Cent. Dig. § 12.

Digitized by Google

defenses are interposed (1) that the indorsement and delivery of the note to the plaintiff were procured through the false and fraudulent representations of the plaintiff to the defendant; (2) that no notice of the dishonor and nonpayment of the note by the maker was ever given to the defendant. The jury found a verdict in favor of the defendant. Plaintiff moved for a new trial in due time upon a settled statement of the case. This motion was denied, and this appeal is from the order denying such motion. The errors assigned are four in number: (1) In refusing to grant a new trial; (2) in submitting to the jury the question of the dishonor of the note; (3) in submitting to the jury the question of fraud; (4) in refusing to grant plaintiff's motion for judgment notwithstanding the verdict.

It was an error to submit the question of fraud to the jury under the evidence. It is claimed by defendant that Nelson represented to him at the time of the indorsement of the note that Steffes had more money and would be willing to pay that note before it was due, providing Grondahl would let Nelson have it; he said he would go and collect it from Steffes. Such is Grondahl's testimony as to the transaction. It is claimed by the defendant that this constitutes the transaction a fraudulent one; that he made a promise during the negotiations without any intention of performing it, making it a fraudulent contract under the provisions of section 3848, Rev. Codes 1899. Every representation of a fact made by Nelson during these negotiations is shown by the evidence to be true. It is claimed that because Nelson said that he would get or collect the money from Steffes, and did not, this constituted a fraud within the meaning of that section, as Nelson did not intend to get it from him. The record contradicts this contention. It shows that the plaintiff did try to collect it from Steffes, but failed. He would naturally be supposed to attempt its collection. There was $200 due him from Grondahl, tied up in the note, for commissions due on the sale of his land to Steffes, besides the $50 that he gave Grondahl when the note was transferred to him. This sum was paid as the difference between the face of the note and the amount coming to him from Grondahl for commissions. This $50 was tendered back to Nelson during the trial, and acceptance thereof refused. If this so-called "promise" could possibly be held to be within the statute, it is very clearly shown that it was not made without any intention of fulfilling it. No injury was occasioned to Grondahl through it in any event. When that indorsement was made it was understood and considered by the parties that Nelson had earned $200 as commissions by selling Grondahl's land. When that sum became due is a matter of conflicting evidence between them. Grondahl claims that no commissions were to be paid by him until he had been paid $500 in cash. In effect he that the commissions were to be paid out of the money paid by Steffes after $500 was paid, which must all go to G dahl; and, he never having been paid in cash on the sale, no commissions eve came payable to Nelson. Conceding such was the bargain, we cannot reach conclusion. True, $500 in cash was paid by Steffes. Only $350 was paid. the evidence does not show that the pay of the whole price could not have bee forced by Grondahl had he wished to d In the place of doing so, he consented Steffes should cancel the contract an ceive back his notes. He surrendered Steffes' notes to him, and received bac contract to deed the land to Steffes. then conveyed the land to his wife, an sold it soon after. The defendant ca now be heard to say that he never rec $500 in cash, as he received the equiv of that sum, and made a new contract Steffes by which Steffes was relieved paying the notes turned back to Gron In view of the fact that the commission justly payable, it is not apparent how injured by having to pay the note whic turned over to Nelson as a recognition the sum of $200 was or would be due him as commission.

The mere fact that misrepresentations made with intent to defraud defendant not be sufficient and would not be gr on which alone to avoid the contract. intent to defraud is not alone groun which to base an action for fraud. Da or injury must be shown, either accru to accrue. There must be a showing the party has been placed at a disadvar to his damage. As said in Alden v. W (Minn.) 49 N. W. 767: "He must have on the faith of the false representatio his damage. A party cannot sustain a tion of this character where no harm come to him. Deceit and injury must cur." The same principle is declared i following cases: London & L. Fire Ins v. Liebes, 105 Cal. 203, 38 Pac. 691; M v. Cook, 32 N. J. Eq. 262; Bartlett v. B 83 Ill. 25, 25 Am. Rep. 346; Danfor Cushing, 77 Me. 182; Hale v. Philbric Iowa, 217; Stetson v. Riggs, 37 Neb. 79 N. W. 628; Bodkin v. Merit, 102 Ind. 2 N. E. 625. See also Bigelow on Frau 541. We think that the attempt to esta the claim that the indorsement was obt through fraudulent representations has entirely.

The next assignment of error is upon mitting to the jury the question whethe tice of the dishonor of the note was giv Grondahl. On the part of the plaintiff is the positive evidence of Nelson tha told Grondahl that Steffes refused to pa note, and that he would look to him f payment. This conversation is not speci ly denied by Grondahl, nor was he

Digitized by Google

specifically as to this conversation. He details a conversation had with Nelson, and says that he had no others with him in reference to the note. This was in effect equivalent to denying that Nelson had notified him of the dishonor of the note by Steffes. It raised an issue for the jury to pass upon on that question. This disposes of the motion for judgment notwithstanding the verdict, as that motion will never be granted under chapter 63, p. 74, Laws 1901, when there is an issue for the jury to pass upon. Bragg v. R. Co. (Minn.) 83 N. W. 511; Richmire v. Andrews & Gale Elevator Co., 11 N. D. 453, 92 N. W. 819.

The respondent contends that the appellant is not entitled to a new trial for the reason that he did not ask for one in connection with his motion for judgment notwithstanding the verdict, made when the verdict was returned into court, and, in consequence of his failure to do so, has waived his right thereafter to move for a new trial based on a settled statement of the case. We do not think that Chapter 63, p. 74, Laws 1901, is subject to such a construction. That law permits a motion for judgment notwithstanding the verdict to be made either separately or in connection with a motion for a new trial. Nothing in the law indicates that they must be joined, nor that the right to move for a new trial in the usual way is waived if a new trial was not asked in connection with the motion for judgment notwithstanding the verdict. It is true, as repeatedly held in the Minnesota cases, under a law the same as the one under consideration, that a new trial will not be granted by the Supreme Court on review of an order granting or denying a motion for judgment notwithstanding the verdict, unless such motion includes within it a motion for a new trial. It is held in such cases that, by failing to unite a motion for a new trial with the motion for judgment notwithstanding the verdict, the right to a new trial is waived. This is all that Bragg v. Ry. Co. (Minn.) 83 N. W. 511, relied on by counsel, decides, as we understand it. In that case no motion for a new trial was made at all in the district court, and for that reason it was held that the right thereto had been waived. This is the extent of the Minnesota decision. In no case is it held that the failure of the moving party to unite a motion for a new trial with his motion for judgment deprives him of his statutory right to move thereafter for a new trial in the usual way. In this case the facts are different. A new trial is asked, based on a settled statement specifying the insufficiency of the evidence to justify the verdict, as the grounds thereof. The right to make such a motion is given by section 5473, Rev. Codes 1899, independently of any proceedings or motions under chapter 63, p. 74, Laws 1901.

For the error in submitting the question of fraud to the jury on the evidence in the record, the judgment is reversed, a new trial granted, and the cause remanded for further proceedings. All concur.

FORESTER v. VAN AUKEN.

(Supreme Court of North Dakota. July 1, 1903.)

MORTGAGES—DEED AS MORTGAGE—REFORMATION OF INSTRUMENT—JURISDICTION OF EQUITY—MUTUAL MISTAKE—EVIDENCE OF CONSIDERATION—EFFECT OF INADEQUATE CONSIDERATION—SUFFICIENCY OF EVIDENCE.

1. Courts of equity have power to reform written instruments to conform to the true intentions of the parties, and parol evidence is admissible for that purpose.

2. In an action to reform a warranty deed to conform to the intentions of the parties that it was to be a mortgage on the ground that there was a mistake, courts of equity will not grant the relief, in the absence of fraud, unless it clearly appears that the mistake was a mutual one.

3. In such a case the evidence must be clear, satisfactory, specific, and convincing that there was such a mistake, or the relief will be denied.

4. The consideration expressed in a deed is not conclusive as to the real consideration for the transfer, and may be inquired into, and matters not expressed in the deed considered in determining whether the consideration was grossly or manifestly inadequate.

5. Mere inadequacy of price is not alone ground for declaring a deed to be a mortgage, but, if grossly inadequate, is a circumstance to be considered in determining what the intentions of the parties were.

6. Evidence considered, and *held* not to warrant a decree declaring a deed to be a mortgage.

(Syllabus by the Court.)

Appeal from District Court, Barnes County; S. L. Glaspell, Judge.

Action by Jennie A. Forester against Belle R. Van Auken. Judgment for defendant, and plaintiff appeals. Affirmed.

C. L. Harris and Lockerby & White (E. H. Wright, of counsel), for appellant. Winterer & Winterer, for respondent.

MORGAN, J. This action is brought to recover the possession of certain real estate situated in Valley City, N. D., and to reform the terms of a deed of such property executed and delivered to the defendant by the plaintiff on August 21, 1893. The complaint alleges that it was mutually agreed between the parties that plaintiff should execute to defendant a trust deed of said real estate; that the ownership of the same should be vested in the plaintiff, but that the defendant was to have full possession and control thereof, lease it, collect rents, pay taxes, and keep buildings insured and in good repair; that out of the money coming into defendant's hands from rents collected the defendant was to pay such taxes, insurance, expenses of repairs, and to pay a mortgage of $2,000, then in force upon one lot and the brick building situated thereon, and out of such money col-

¶ 5. See Mortgages, vol. 35, Cent. Dig. § 86.

Digitized by Google

lected was also to pay herself a certain note given to her by plaintiff and her husband in 1891 for $800; that upon the payment of such debts according to such agreement possession of such premises should be restored to plaintiff, and the same reconveyed to her by a warranty deed. These are substantially the allegations of paragraph 3 of the complaint. The complaint further states: "That in pursuance of said agreement this plaintiff conveyed to the said defendant, by a deed of warranty in writing, the premises hereinbefore described; * * * that through the inadvertence and mistake of this plaintiff and the defendant the conditions mentioned and specified in paragraph 3 of this complaint were not inserted in said deed, but said deed was intended by plaintiff and defendant as a trust deed or mortgage security, under which said defendant might carry out the conditions and covenants mentioned and described in said paragraph 3 of this complaint, but said deed does not express the true and real intention of this plaintiff and said defendant by reason of said omission." The prayer of the complaint is for an accounting and a reconveyance, and for such other and general relief as may be necessary and proper under the evidence. The complaint states many other facts bearing on this cause of action, but the substance of the cause of action is as stated. The answer alleges that the said property was sold to the defendant for a valuable consideration, and conveyed to her by said warranty deed; that such sale was an absolute sale, and contained no contemporaneous, prior, or subsequent stipulations or agreements for a reconveyance, and contained no agreement that the transfer was made in trust or for security purposes. The trial court made findings of fact and conclusions of law in favor of the defendant. Judgment was entered pursuant thereto. This appeal is taken from such judgment. A trial de novo is demanded in this court pursuant to section 5630, Rev. Codes 1899.

The evidence in the case is voluminous, covering nearly 400 pages of the printed abstract. The facts pertinent to a determination of the issues may be summarized as follows: The plaintiff is the daughter of the defendant. In 1889 the plaintiff's husband, Alex. McConnell, died, leaving to her and to her daughter, Georgia McConnell, individually, considerable real and personal property. In 1891 the plaintiff married one George W. Forester, who engaged in business in Montana, and carried on such business with the plaintiff's money partly, and lost considerable of her money in that way. For the purpose of providing him with money, the plaintiff sold some of her property, and borrowed $2,000, and secured its payment by a mortgage on lot 13, in Valley City, on which lot there was a brick building, which is a part of the property in dispute in this action. This mortgage did not mature until about four years from August 21, 1893, the day on which the warranty deed was given by plaintiff t fendant. The plaintiff had signed notes ly with her husband for goods purchas his business, amounting to several hu dollars, and some of these notes were to become due in August, 1893. The tiff and her husband also owed the de ant $800 and two years' accrued intere 8 per cent. per annum. The defendant written Forester, asking him to pay this He and his wife were then living in tana. She came east to Valley City, the defendant resided, to make some arr ment in regard to this indebtedness. A making of the contract in relation to th position of the property herein involved plaintiff and defendant were the only pe present. As to what was said there in ing to the agreement, their testimony conflict, and cannot be reconciled on the ory that both are endeavoring to tel truth. The plaintiff testifies that there no sale or agreement to sell; that the veyance was executed to secure the de ant on her $800 note. She says: "My derstanding, and we talked it, I was to her a trust deed of the property. She to look after it, and, after paying the gage, she to hold it long enough to c the rent and pay the taxes, so she coul the mortgage of $2,000 and her note of and taxes, keep the property insured, a the end of that time I was to have the erty back." She further testifies that did not know when she signed the deed it did not express their agreement an intention in regard to the disposition o property, and that, had she known th did not express their intention, agree and understanding, she would not have ed it. The defendant denies that there ever any talk, suggestion, or intimation ever as to deeding the property back, o anything was said by them that contem anything but an absolute sale of the pro free of any conditions whatsoever. He timony as to the agreement is as fol "A. On or about the 21st of August [plaintiff] received a letter from Mr. For asking her if she had fixed up the bus of mine, and to be sure and do it at She told me how she said she was used. didn't know that Mr. Forester was askin to pay money at Livingston, and she her interest to pay at Fargo. She sai had no money to pay that, and said tha was discouraged, but he wrote to her she must fix that up, and she wondered she would do it. We talked about it, told her I would be glad to help her could. But finally, when she received th ter from Mr. Forester, saying she i meantime had a letter from an attorn Livingston, telling her she might as wel the $600, because she would have to m later. * * * Then she received thes ters in the morning, and in the after or at dinner time, or about that time

Digitized by Google

says: 'Monie, I will sell you this property.' I said, 'Can you sell it?' She says, 'I can.' She says: 'Charlie is a good workman, and he can make a good living anywhere, but he will never settle down to work as long as I have a dollar. I will sell you this property. There is enough left of it to make you a good home. You have Georgia.' I said, 'What will the consideration be?' She says: 'It will pay your note, and you assume the mortgage and taxes.'" The defendant did not then and there accept the proposition to sell her the property, but stated that she wished to think it over, and talk it over with Mr. Winterer, an attorney of Valley City. She started for his office, but met him on the street, and asked him to come to her house. He came there some time later, and the terms of the sale were stated to him by the plaintiff. The amount due on the $800 note was computed, and some other items of indebtedness due defendant from plaintiff were agreed on and settled, and the consideration for the deed agreed on as $1,100, in addition to assuming the payment of the $2,000 mortgage and payment of the 1892 taxes on all the property conveyed. At this interview all the details of the agreement were agreed upon, according to the testimony of Mr. Winterer and the defendant, and it was further agreed that the conveyance was to be a warranty deed. Mr. Winterer testifies that the agreement, as stated to him in their presence, was that the property was to be sold absolutely, and without any reservations. He procured from them the description of the property, and left for his office to draw the deed. He returned with the deed drawn, and was accompanied by his sister as a witness. He read or stated to the plaintiff the substance of the deed, and she stated that it was what she wanted, and perfectly satisfactory. She then signed it. It was witnessed and acknowledged in due form. He then took it to his office, placed his seal as notary public thereon, and returned to the house. There he delivered the deed to the plaintiff, and she to the defendant. The defendant delivered the $800 note to plaintiff, who immediately destroyed it. The tenants were then notified of the sale, and that all rents were to be collected by the defendant. Mr. Winterer's testimony corroborates that of the defendant, although expressly denied in most particulars by the plaintiff. From this testimony and other circumstances shown in the record we are to determine what the intentions of the parties were at the time that this deed was executed. Was the transfer to be an absolute one, or was it to be a transfer subject to reconveyance after certain conditions had been performed?

Upon the oral testimony alone, we have no difficulty in reaching the conclusion that it was an absolute sale. There is a decided preponderance of evidence in favor of this conclusion. The circumstances surrounding the transfer are such as to corroborate this oral testimony, in our judgment. These circumstances will be referred to later. It is claimed by the plaintiff in her complaint and in her testimony that there was a mutual mistake made by the parties in signing a warranty deed in place of a trust deed or mortgage security, as intended. This contention is utterly unsustained. The plaintiff claims that she supposed it was a trust deed. She does not attempt to show that the defendant thought it to be such. Her mistake alone would not be ground for reforming the deed. It must be a mutual mistake before the contract actually signed by the parties will be changed. 2 Pom. Eq. Juris. § 862; Spare v. Home Ins. Co. (C. C.) 19 Fed. 14; Wachendorf v. Lancaster (Iowa) 14 N. W. 316; Bradford v. Remney, 30 Beaver, 431; Nevius v. Dunlap, 33 N. Y. 676; Ludington v. Ford, 33 Mich. 123; Paulison v. Van Iderstine, 28 N. J. Eq. 306; Diman v. Railroad Co., 5 R. I. 130. "It must appear that both have done what neither intended." Hearne v. Marine Ins. Co., 20 Wall. 488, 22 L. Ed. 395. The evidence does not warrant the conclusion that the deed was to be a mortgage, but, on the contrary, amply supports the finding that the deed was in exact compliance with the prior agreement. It is urged that the circumstances in evidence show that the deed was intended as a mortgage, and that its execution was made through mistake, and that such circumstances overcome the positive evidence of the defendant, and show satisfactorily that the deed was intended as a trust deed or mortgage. First it is claimed that the consideration was so grossly inadequate as to render it wholly improbable that an absolute conveyance could have been intended. The property consisted of four lots in Valley City. On three of them there were buildings, and one was a vacant lot. One of the buildings was a business block built of brick. The other buildings were for residence purposes. The evidence as to the value of this property in August, 1893, is very conflicting. Witnesses with apparently equal judgment and opportunities to speak of its value differ greatly in their conclusions. The highest valuation placed on the property was $7,000, and the lowest $3,825. This conveyance was made during the panic of 1893, and the witnesses testifying on behalf of the defendant place great stress upon the fact that the scarcity of money and the demand for it at that time caused a depreciation in values. The difficulty at that time of raising money necessarily affected the market value of property, and is a fact to be taken into consideration in determining what the fair value of the property then was. The consideration paid for this property by the defendant was, when all summed up, $3,300. This included the $800 note, the $2,000 note, other indebtedness on money paid out for plaintiff or loaned to her, and taxes for the year 1892. If the property were worth $3,825, a sale for $3,300 would not be at all in-

Digitized by Google

adequate in the sense that it would be evidence to indicate that a transaction was a mortgage, and not a sale. But we may concede that the property was more valuable than that, and still the conveyance for the sum of $3,300, under the circumstances of this case, would not indicate to any degree that a trust or mortgage transaction was intended. The plaintiff and defendant were at that time on friendly terms. The defendant was the guardian of plaintiff's daughter, Georgia, who had lived with the defendant, and was to live with her in the future much of the time. The plaintiff was anxious to make some disposition of the property, and was anxious to pay or secure her mother the money due her. There were other debts due from the plaintiff, and it is quite clear from the evidence that some of her creditors were making inquiries as to the plaintiff's property with a view to realizing therefrom on some of those debts. The testimony shows that the plaintiff came from Montana to make some arrangement as to the Valley City property and the payment or securing of the $800 note. The plaintiff's husband was then doing a failing business, and had lost considerable money. He was in debt, and his wife was a joint maker with him on some of the notes given for these debts. The financial condition of plaintiff and her husband was becoming alarming and serious. It must have been forced upon the minds of plaintiff and her husband that the Valley City property was liable to be wrested from her by urgent creditors. With this state of facts confronting her, it was natural that she should prefer to sell the property to her mother, even at a sacrifice, and thereby pay her the $1,100 due her. Her daughter, Georgia, would thereby be directly benefited, and her mother as well. It is quite reasonable, therefore, that the plaintiff should have stated, as testified to by the defendant: "I will sell you this property. There is enough left of it to make you a good home. You will have Georgia." Her husband had lost much of her property, and it appeared that it would all soon be gone. Her desire to see her mother protected was, therefore, a most natural feeling. Our conclusion is, therefore, that under the circumstances, and in view of the relations of the parties, the consideration for the sale is not so inadequate as to give it any weight as a circumstance against the validity of the sale, or as showing that there was a mistake in the execution of the deed.

It is further claimed that there was no sale, and none intended by either party, and as tending to sustain such contention it is urged that the $800 note was not turned over to the plaintiff when the deed was delivered, or at any other time. On this question the testimony of the defendant and of Mr. Winterer is positive and explicit that the note was turned over to the plaintiff, and by her torn up, when the deed was delivered. The plaintiff says it was not, but she is not corroborated by any other witness, nor by a gle fact or circumstance. Her testimony this point is, therefore, overthrown by so cisive a preponderance of the evidence there remains no doubt in our minds that note was returned to her.

On a careful consideration of the evid we find no ground upon which to reform deed as prayed for. The sole ground which a reformation is asked is that t was a mutual mistake by the parties. fraud is pleaded, and, had it been plea the record lacks any evidence to suppor The contention is made in the argument t "Even though her [defendant's] mind free from fraud at the time of the tran tion, and though she still intended to c out in good faith the conditions of the t at a later date, at least, she determine retain the property." There would be s foundation for this contention if some missions attributed to the defendant made as claimed. The defendant de making any of these alleged admissions. independent circumstances tend to show she ever made them. Such testimony sisted of admissions claimed to have made years before this trial, and is not cient to establish the fact that the deed mutually intended as security, simply, in face of solemn recitals of the deed itself the positive and convincing evidence of two persons named, coupled with the pos denials of the defendant that she made t It is further claimed that defendant, be selling one of the lots transferred by the in suit, advised with the plaintiff be making such sale. This is not establis The advice is claimed to have been sougl Billings, Mont., while defendant was vis the plaintiff there. The defendant tes that the transfer was made before she Valley City to make the visit at Billings, it is not shown in any way that there any correspondence between them rela to the sale of the lot. The deed was r on September 28, 1894, and the defen started for Billings on the 29th. The a has been considered and treated by u one to reform a warranty deed, and mak conform to the alleged intentions of the ties that it should be a mortgage. The "trust deed" is frequently used in the plaint and in the evidence. The facts p ed show, we think, that the trust deed tioned was intended to be used as syn mous with the words "mortgage," "mort deed," or "mortgage security." This shown conclusively by the clause of the plaint above quoted, wherein it is all that the deed was intended as a trust or mortgage security. Plaintiff's evid also is to the same effect. She testifies the agreement was that she was to give fendant a trust deed as security for the note. Section 4703, Rev. Codes 1899, au izes a transfer by deed to be shown to mortgage, and without such statutory

Digitized by Google

thority courts of equity have such power. Parol evidence is admissible to show that a deed absolute on its face was intended as a mortgage. Jasper v. Hazen, 4 N. D. 1, 58 N. W. 454, 23 L. R. A. 58; Pomeroy, Eq. Jur. § 1196.

Our conclusion is that the deed, as executed, expressed the real intention of the parties when executed. The most that can be said in favor of recovery by the plaintiff is that there is some evidence to sustain it. In the place of plaintiff having sustained her contention by that clear, convincing, and satisfactory evidence required in this class of cases, we find the defendant has disproved such contention by evidence that is clear and convincing, and leaves no substantial doubt in our minds of the truthfulness of the defendant's answer. Not only does the oral testimony thus convince our judgment, but the written evidence and other circumstances add to the weight of the oral testimony. On April 23, 1896, plaintiff's husband wrote the defendant asking her to loan him $50, saying in the letter that he would return it in a few days. On January 13, 1897, he again wrote her in regard to the loan of money. In neither of these letters was anything said about the property, nor the accumulated rental therefrom. The money was called for as a loan, and not as an advancement on account of these rents. If he was then relying on this deed as a mortgage simply, and considered that the defendant was holding it in trust for his wife, and he wished her to furnish the money, it would have been a most natural inquiry to make whether the rents had not now fully paid the debt due to the defendant. Instead of making such an inquiry, he asked for a loan, with express promises to return it soon. For nearly six years the defendant was permitted to manage this property, collect the rents, and make valuable improvements thereon, and never during that time did plaintiff or her husband demand an accounting, or show any interest in the outcome of the sale now claimed to have been for temporary purposes only. There is nothing contained in the correspondence in evidence to indicate that the plaintiff or her husband ever entertained the idea of a reconveyance during these six years. So far as the correspondence is concerned, they seemed to have abandoned all interest in the property, as they never referred to it. The plaintiff does say that she asked for an accounting, but in her cross-examination on this subject her statements are so indefinite and contradictory as to entirely deprive them of any weight. In this the burden rests with the plaintiff to show by clear, convincing, and satisfactory proof that this deed was executed through a mistake existing as to its terms when it was executed. Jasper v. Hazen, supra; McGuin v. Lee, 10 N. D. 160, 86 N. W. 714. She has failed to do so. She has failed to show that there was a mistake on her part, even, much less to show that there was a mutual mistake. She does not claim any deception by reason of false statements as to the terms of the deed. The most she claims is that she supposed it to be a trust deed. She heard it read, or its contents stated, and could have read it herself. She is a woman of equal intelligence and business ability with her mother, so far as the record shows. No circumstances appear showing that she placed any particular confidence in her mother and was imposed on.

The fact is suggested in argument that the defendant committed a fraud on plaintiff in permitting her to sign the deed believing it to be a mortgage, when the defendant knew otherwise. There is not a scintilla of evidence to show this, and it fully appears that the facts known to the defendant were also made known to plaintiff. After a careful examination of the evidence, we find that the contract made by the parties, as evidenced by the deed, should not be reformed. The deed expressed their intentions. By reforming it to comply with plaintiff's request, we would be making a contract for the parties not contemplated by them when the deed was signed, and this should never be done. Our conclusion accords with that of the trial court.

The judgment is affirmed. All concur.

BALDING v. ANDREWS et al.

(Supreme Court of North Dakota. July 31, 1903.)

NEGLIGENTLY SETTING FIRE TO BUILDING—COMMUNICATION TO OTHER PROPERTY—ACTION—BURDEN OF PROOF—ADMISSION OF AGENT—RES GESTÆ.

1. Where a shingle from a burning building, carried by a high wind, set fire to plaintiff's property, and he sought to recover from the owner of the burned building, alleging that the fire originated through the negligent use of dangerous machinery, causing friction and intense heat, communicating fire to combustible material negligently permitted to accumulate in contact with such machinery, the burden of proof was on plaintiff to establish both the cause of the fire and the negligence of defendant.

2. An exclamation or statement of an agent made contemporaneously with the principal act or transaction, and forming a natural and material part of it, is competent as being original evidence in the nature of res gestæ, but not an abstract or narrative statement of a past transaction.

3. A statement of an elevator agent while the elevator was burning, made in answer to an inquiry as to the cause of the fire, that "I tightened up the chain; the fire must have come that way," is incompetent because it relates to a past occurrence, and is a mere statement of opinion.

4. Defendant cannot be held liable for neglecting to have on hand, for immediate use, proper appliances and equipments to extinguish fires, when the evidence shows that the fire could not have been extinguished, no matter what equipment had been furnished.

5. Evidence *held* insufficient to justify submission of the case to the jury.

(Syllabus by the Court.)

Digitized by Google

Appeal from District Court, Stutsman County; Glaspell, Judge.

Action to recover for the negligent burning of hay and straw, by George H. Balding against A. C. Andrews and J. E. Gage, partners under the firm name of Andrews & Gage. Judgment for plaintiff, and defendants appeal. Reversed.

Ball, Watson & Maclay, for appellants. S. E. Ellsworth and John Knauf, for respondent.

COCHRANE, J. Plaintiff's action is to recover damages for the destruction, by fire, of certain hay and straw stacked near the elevator of defendants. The fire caught from cinders blown into the stacks from the burning elevator of defendants.

The evidence does not disclose the cause or origin of the fire which destroyed appellants' elevator. This is left entirely to speculation and conjecture. At 2 o'clock on the day of the fire, defendants' agent, Longbolle, mended the elevator chain. He operated the machinery from 2 until 5:30 p. m. The fire was discovered in or near the elevator pit about 6:30 or 7 o'clock p. m.

The plaintiff relied upon the declaration of the servant, Longbolle, to establish how the fire started, and that it was the result of negligence. Nels Peterson, a witness for the plaintiff, testified, in effect, that during the burning of the building he had a conversation with Mr. Longbolle, the agent, as to how the fire occurred. "Q. You may state that conversation to the jury." This question was seasonably and properly objected to. The objection was overruled, and the witness, over exception, answered: "A. I asked the agent how this fire come; he answered me. He said, 'I tightened up the chain; the fire must have come that way.' So I said what he done it for. 'Well,' he said, 'the chain would not stay on; it makes me mad;' so he tightened it up, maybe too tight." The objection to this testimony should have been sustained. It was hearsay, and not a part of the res gestæ.

It is contended by counsel for respondent that the declaration of the agent in this case was made while the fire was burning, and was to the effect that the fire was caused by his negligence; that the act to be illustrated was the cause of the fire, and, if the fire was caused by friction induced by the negligence of Longbolle in operating the machinery with the elevator chain at extraordinary tension, it must have ignited before 5:30 p. m., when the elevator stopped running; that the declaration was made in view of the conflagration produced by his negligence, and that the fire was a part of the main fact or transaction; therefore proof of this declaration was proper as accompanying the main transaction, and as part of the res gestæ, within the rule laid down in Railway Co. v. Coyle, 55 Pa. 396; Shafer v. Lacock (Pa.) 32 Atl. 44, 29 L. R. A. 254.

Declarations of an agent, to bind the principal, must have been made during the continuance of the agency in regard to a transaction then depending, et dum fervet opus. It must be in the nature of a verbal act. To be received in evidence, such declarations must appear to have been voluntarily and spontaneously made under the immediate influence of the principal transaction, and be so connected with it as to characterize or explain it, and made under such circumstances as to exclude the possibility of a design to misstate the facts. Short v. Elev. Co., 1 N. D. 163, 45 N. W. 706. In Lund v. Tyngsborough, 9 Cush. 36, the Supreme Court of Massachusetts discussed at some length when declarations may be considered as part of the res gestæ and are admissible as original evidence. It is there said: "When the act of the party may be given in evidence, his declarations, made at the time, and calculated to elucidate and explain the character and quality of the act, and so connected with it as to constitute one transaction, and so as to derive credit from the act itself, are admissible in evidence. The credit which the act or fact gives to the accompanying declarations as a part of the transaction, and the tendency of the contemporary declarations, as a part of the transaction, to explain the particular fact, distinguish this class of declarations from mere hearsay. Such a declaration derives credit and importance as forming a part of the transaction itself, and is included in the surrounding circumstances, which may always be given in evidence to the jury with the principal fact. There must be a main or principal fact or transaction, and only such declarations are admissible as grow out of the principal transaction, illustrate its character, are contemporary with it, and derive some degree of credit from it." This language was cited with approval by the New York Court of Appeals in Waldele v. Ry. Co., 95 N. Y. 278, 47 Am. Rep. 41, and was cited by this court to sustain its conclusion in Short v. Elev. Co., 1 N. D. 164, 45 N. W. 706. What, then, is the principal transaction, or, in the language of Justice Harlan, in Pierce v. Van Dusen, 24 C. C. A. 280, 78 Fed. 693, "the fact necessary to be explained," the res gestæ of this controversy? We answer, the cause of the fire, with a view to determining whether it was due to the negligence of defendants' agent or servant. Here the res gestæ was not the fact that plaintiff's grain was destroyed by fire, or that the fire was communicated from defendants' burning elevator. These facts were apparent and undisputed. Waldele v. Ry. Co., 95 N. Y. 274, 47 Am. Rep. 41; Thayer's Cases on Evi. 664. Nor was it the act of tightening the elevator chain, for the tightening of the chain was an antecedent and independent fact, which should have been proved by legal evidence before it could be made available to plaintiff. Ehrlinger v. Douglas, 81 Wis. 59, 50 N. W. 1011, 29 Am. St. Rep. 863; McDer-

Digitized by Google

mott v. Ry. Co., 87 Mo. 300. With a proper foundation laid, the fact that the chain was tightened by Longbolle before he started the machinery in operation was competent evidence in the case as tending to show that he knowingly operated the machinery when the chain was at unusual tension, but only after evidence tending to some extent to show that the fire was caused by friction, as alleged, had been received in the case. Such declaration of the agent could not be received for any other purpose than that of showing the knowledge of Longbolle that the chain, when operated, was at an unusual tension, and it could not be considered as tending to establish the fact of tightening the chain. Borrowing an illustration from Chief Justice Henry of Missouri: "If one were offered to testify that he heard another inform the superintendent of facts showing the incompetency of an employé, it would be admissible as showing that the superintendent had knowledge of those facts, if the facts themselves were otherwise proved; but it would certainly be inadmissible to prove those facts. It would be but hearsay evidence as to the existence of those facts. It is upon the same principle that the admission of an agent of his knowledge of facts is competent to prove his knowledge of the facts, if the existence of such facts is otherwise proved, but it is incompetent to prove the existence of the facts. What an agent says is but hearsay as against the principal, unless a part of the transaction he is engaged in at the time." McDermott v. Ry. Co., 87 Mo. 285, 300; Chapman v. Ry. Co., 55 N. Y. 584.

Longbolle's declaration was not a part of the res gestæ. At the time it was made he was not transacting the business of the principal. It did not relate to a transaction depending at the very time. It did not immediately precede or accompany the act which led to the catastrophe, or constitute any part of the act. It was a narrative only of a transaction then past. Luby v. Ry. Co., 17 N. Y. 133; Adams v. Ry. Co., 74 Mo. 553, 41 Am. Rep. 333; Smith v. Ry. Co., 91 Mo. 58, 3 S. W. 836; Vicksburg Ry. Co. v. O'Brien, 119 U. S. 99, 7 Sup. Ct. 118, 30 L. Ed. 299; Tennis v. Ry. Co. (Kan.) 25 Pac. 876; Alabama, etc., Ry. Co. v. Hawk (Ala.) 47 Am. Rep. 403; Durkee v. Ry. Co. (Cal.) 11 Pac. 130, 58 Am. Rep. 562; Hawker v. Ry. Co., 15 W. Va. 628, 36 Am. Rep. 825; Wormsdorf v. Ry. Co., 75 Mich. 472, 42 N. W. 1000, 13 Am. St. Rep. 453; McDermott v. Ry. Co., 87 Mo. 299; Lane v. Bryant, 9 Gray, 247, 69 Am. Dec. 282; Whitaker v. Ry. Co., 51 N. Y. 295; Barnes v. Inhabitants (Me.) 52 Atl. 844; Blackman v. Ry. Co. (N. J. Sup.) 52 Atl. 370; Ryan v. Gilmer, 2 Mont. 517, 25 Am. Rep. 744; Ehrlinger v. Douglas, 81 Wis. 59, 50 N. W. 1011, 29 Am. St. Rep. 863; State v. Montgomery, 8 Kan. 351; Short v. Elev. Co., 1 N. D. 159, 45 N. W. 706. If, while Longbolle was engaged in running the elevator with the chain at unusual tension, so as to cause heat in the bearings through the consequent friction, the elevator building had caught fire from this cause, a declaration then made, such as the one received in this case, would have been competent. But here the running of the elevator had ceased more than an hour before the fire was discovered, and Longbolle knew no more as to the cause of the fire than the person in whose hearing the declaration was made or the jury who tried the case. That the declaration was made while the fire was burning, and under the impulse excited by a view of the probable consequences of his negligent act, is not significant. In Hawker v. Ry. Co., 15 W. Va. 639, the court, on this point, said: "The fact that the engine which had been thrown from the track when the accident occurred was still off the track when these declarations were made, it seems to me, has no bearing on the question, for the throwing of the engine off the track was not the principal fact to be shown. Indeed, it had nothing to do with the subject of inquiry before the jury, the manner in which the cattle had been killed." In that case the declaration was made within an hour after the accident by the engineer on the engine which had caused the accident, and in view of the consequences of the declarant's negligent act. The case of Hanover Ry. Co. v. Coyle, 55 Pa. 402, cited by respondent, is distinguishable from the one at bar. In that case the declaration of the engineer was made in view of the goods strewn along the road by the breaking up of the boxes, the result of the accident. It was made immediately after the happening of the fact. But there was no doubt, under the proofs in that case, that the train ran into the peddler's cart while it was under the control of the engineer who made the declaration. This case has been much cited, and is otherwise in point as sustaining respondent's contention; but this court, early in the history of the state, declared squarely in favor of the doctrine that declarations must accompany the act they characterize and be a part of it. "Sound public policy requires that the established rule as to this class of evidence should be strictly adhered to and not extended. It is a species of evidence liable to abuse, and when, as in this case, the party making the declaration is a witness at the trial, testifying to the facts, his declarations made at any time, however short, after the occurrence has ended, in regard to the occurrence itself, is mere narrative, and should not have the force of evidence, unless they are strictly and unquestionably a part of the res gestæ. They are not so in this instance." State v. Maddox (Me.) 42 Atl. 790. "It is enough, where the object is to visit the consequences of a wanton act upon a party who, for aught that appears, believed its servant to be free from the wantonness imputed to him, that it did not appear affirmatively that the declarations were made when they could properly be re-

Digitized by Google

garded as made at the time the injury was inflicted." Whitaker v. Ry. Co., 51 N. Y. 295. Longbolle was a witness in this case, and, if the matters he stated in answer to the question of Nels Peterson were of evidential value to plaintiff, they could have been proven by competent, and not by hearsay, evidence. In Adams v. Ry. Co., 74 Mo. 559: "The servants who made the declarations offered in evidence were competent witnesses for plaintiffs to prove that her husband was seen on the trestle by the servants managing the train, and that the train could have been stopped before it reached him. If the train could have been stopped after deceased was discovered on the trestle by defendant's servants, that fact could have been proved by legitimate testimony. It is no answer to this that plaintiff could not rely upon them because they were in defendant's employment. We are not to assume, in order to admit incompetent evidence, that the only person to whom the fact to be proved is known would commit perjury. If plaintiff cannot prove by competent testimony a fact essential to her recovery, we cannot establish a rule in her favor which, in a hundred other cases, would probably lead to manifest injustice."

We conclude that the part of the declaration of Longbolle concerning the tightening of the chain could not be proven in this way. So far we have considered only that part of the declaration as to the tightening of the chain. This was not the entire declaration received in evidence. Its concluding part, to the effect that the fire "must have come that way," either taken by itself or in connection with what preceded and followed it, was incompetent as a mere expression of opinion, guess, or conjecture of the declarant. Ohio & Miss. Ry. Co. v. Stein (Ind. Sup.) 31 N. E. 180, 19 L. R. A. 751; Lane v. Bryant, 9 Gray, 245, 69 Am. Dec. 282; 24 Am. & Eng. Enc. L. 664; Baxter v. Ry. Co. (Minn.) 75 N. W. 1114; Montague v. Ry. Co. (Wis.) 72 N. W. 41; Megow v. Ry. Co., 86 Wis. 466, 56 N. W. 1099; Gainesville, etc., Ry. Co. v. Edmondson (Ga.) 29 S. E. 213. In Ohio, etc., Ry. Co. v. Stein (Ind. Sup.) 31 N. E. 180, 19 L. R. A. 751, the engineer of the train causing the injury exclaimed, "If that man last night would have fixed that cylinder cock, you would never have been hurt." The court said concerning it: "This declaration related to the past, and was a narrative of what had been done at an entirely different time and place. It was, indeed, a combination of an opinion and a narrative of the things that had passed, for it was a statement of the engineer's opinion that if, on the night before, something had been done which he had then directed, the collision could not have taken place. It is too well settled to excuse the reference to authorities that neither narratives of past occurrences nor matter of opinion can be placed before a jury by proving the declarations of an agent or servant." In Lane v. Bryant, 9 Gray, 247, there was a collision between plaintiff's and defendant's carriages. Defendant's driver, at the time of the accident, while plaintiff was being extricated from his carriage, and while the crowd was about, said that the plaintiff was not to blame for what had occurred; but this evidence was declared incompetent, for one reason, because it was only the expression of opinion about a past occurrence, and not a part of the res gestæ. The cause of the fire was not to be proven by opinion evidence, because, from anything appearing in the case, the jury were as capable of forming an opinion on the subject as was Longbolle. Rogers, Exp. Test. § 5; Kent v. Miltenberger, 15 Mo. App. 480; Railroad Co. v. Schultz, 43 Ohio St. 270, 1 N. E. 324; Crane v. Northfield, 33 Vt. 126; Parkhurst v. Masteller, 57 Iowa, 476, 10 N. W. 864. And no attempt was made to prove any facts on which such opinion could rest, or which would justify the taking of nonexpert opinion as to the cause of the fire. Southern Ry. Co. v. McLellan (Miss.) 32 South. 283, is not an authority against this position. The expression of opinion there was received as a declaration against his interest made by the party plaintiff. It was not the declaration of a third party for which the litigant sought to be held or bound by it was in no way responsible.

Appellants assign error upon the denial of the court of their motion for a directed verdict. The burden of proof was on the plaintiff to establish the cause of the fire, and that it was the result of want of ordinary care on the part of defendants or their agent. The court so instructed the jury.

Plaintiff in his complaint alleged, as defendants' negligence, that they operated their elevating machinery when, because of the defective character, improper adjustment, and unusual tension of the elevator chain upon the roller, and the neglect to lubricate the bearings of the same, an intense heat was generated in the bearings by the friction thereon, and the chaff and other inflammable material that defendants had allowed to accumulate about the bearings, coming in contact with the heated part, took fire. Plaintiff assumed to prove, in support of this allegation, that the fire originated from the friction of the shaft or axle in its bearings igniting inflammable materials negligently permitted to come in contact with the bearings. Aside from some evidence that the fire was first seen near to or in the pit, and the incompetent conjecture of the agent as to its cause, no evidence was produced by plaintiff as to how the fire started. When plaintiff rested his case he had not furnished any evidence which would have warranted the jury in finding that the elevator chain was operated when it was defective in any way, when it was at an unusual tension, or when it was improperly adjusted; nor was any evidence offered at all that the bearings were

Digitized by Google

not properly lubricated, or that inflammable matter had accumulated around the bearings, or that the fire started in this way. His allegations as to negligence were wholly without support. The defendants offered evidence showing that the bearings were lubricated; no accumulations of any kind of combustible material in the pit; that there was nothing combustible in contact with the bearings, although the babbitt was encased in wood; that the elevator chain was not tighter than usual; and that conditions were the same as they had been for four years before. In rebuttal, plaintiff offered evidence that when shafting was out of plumb it resulted in greater friction and the generation of heat; also that a tightening of the elevator chain too much would raise the bottom shaft to the top of the boxing, causing pressure on top of the boxing, and lack of lubrication, because the oil would be in the bottom of the box; but no evidence was offered that these conditions did in fact exist. This was the condition of the proofs when the case was submitted. The verdict, in this condition of the proofs, was speculative, resting upon the declarations of the agent as to his conjectures.

The proofs do not establish by any competent evidence facts sufficient as to the cause of the fire to make a question for the jury's consideration. The proofs are not inconsistent with or contradictory of any other cause for the fire. If an incendiary had caused the destruction of the elevator building by lighting a fire under it after the agent had gone to supper, the proofs harmonize with this hypothesis as well as with the one assumed by plaintiff. The evidence does not exclude this possibility; neither the chance of accidental fire. On November 1st there may have been a fire in the elevator, and a coal or cinder may have escaped, causing the destruction of the building; a lighted match or cigar thoughtlessly dropped; a spark from a passing engine; the evidence does not exclude these possibilities.

It is not asking too much of a plaintiff, when he alleges negligence, that he be required to prove it. When he claims damages because of fire, which he avers was started through the neglect to observe due care and caution, his proofs must establish the charge. Mere speculation or possibility will not do. Sheldon v. Ry. Co., 29 Barb. 228; Longabaugh v. Ry. Co., 9 Nev. 296; Smith v. Ry. Co., 37 Mo. 295; Omaha Ry. Co. v. Clark (Neb.) 53 N. W. 970, 23 L. R. A. 509; Kilpatrick v. Richardson (Neb.) 56 N. W. 481; White v. Ry. Co., 1 S. D. 330, 47 N. W. 146, 9 L. R. A. 824. In Sheldon v. Ry. Co., 29 Barb. 228, the court said: "The plaintiff must show that the act or omission of which he complains was the act or omission of the defendant, and also that such act or omission was a negligent one. It is not enough for him to show that the defendant uses fire to generate steam, that the locomotive engines running upon the road occasionally emit sparks of fire and cinders, that his mill was within 67 feet of the track of the road, with some of the west windows and those next the road left open, and carpenters' shavings and other combustible matter upon the floor, that no business was carried on at the mill and no one employed about it at the time, that the west wind was blowing stiffly when the fire was discovered, and that the company's trains passed to and fro several times each day. These circumstances are quite material and essential, but, without something in addition, they do not establish the principal fact alleged in the complaint, because they do not exclude the idea that the fire may have originated in some other source. Standing alone, these circumstances do no more than make out a possible case that possibly the fire proceeded from the defendant's locomotives. It is not enough for the plaintiff to show a possibility that the fire was communicated to the mill by sparks emitted by defendant's locomotives. He cannot recover upon a possibility. Even if the evidence went further and brought the facts sought to be proved within a probability, still the plaintiff must fail, because, to justify a verdict, the law requires, not positive proof, it is true, but such proof as will leave no reasonable doubt of the existence of the fact upon which it must rest. The rights of property, and all claims to its possession and enjoyment, are dependent upon the existence of the facts, and when they are disputed and become the subjects of judicial investigation, if juries could assume their existence without sufficient evidence, and render verdicts upon possibility, probability, and conjecture, the courts would be shorn of their legitimate authority, and the wise and just rules of the common law, as they have been recognized and applied from time immemorial, would lose their principal value." James McDonald testified in rebuttal to statements made by Longbolle in his presence as to the cause of the fire. This evidence was properly received only as impeaching Longbolle, and could not be considered as evidence of the matters narrated. Barnes v. Rumford (Me.) 52 Atl. 844.

One other point remains to be mentioned. Plaintiff alleged negligence in that defendants knew that their elevator was built of inflammable material and was liable to fire, and it negligently omitted to provide buckets, hose, water, and appliances for its extinguishment should fire break out in said building. There was evidence that a barrel about two-thirds full of water was on the lower floor, and another barrel about two-thirds full of water was upstairs in the elevator. There was no well about the building, no hose or other appliance for extinguishing fire. One of plaintiff's witnesses testified: "I did not make any effort to extinguish the fire. I did not think there was any possible chance. There was no water or hose, or any appliance

Digitized by Google

extinguishing a fire of that kind that I could see. I did not look around to try and find something. If we had a regiment of men we could not put it out. There was no well about the elevator. No attempt was made to put the fire out after it got above the floor. We did not attempt to put out the fire in the elevator. I thought it was useless to try." It also appeared that when the parties got to the elevator after the fire was discovered it was impossible to get into the room where the fire was, because of the fire. There was no evidence to the contrary in the record. If fire extinguishers had been provided they could have been of no possible use in extinguishing the fire. The failure to provide such extinguishers or appliances could not, therefore, render defendants liable.

We do not decide that defendants were under duty to keep on hand water, hose, and appliances to extinguish fire. Neither do we decide whether, in this case, the circumstances justified the submission of that point to the jury. If, as the uncontradicted evidence shows, the fire could not have been quenched or controlled, nor the burning shingles stopped from falling upon and igniting plaintiff's stacks, had every reasonable precaution for the arrest and putting out of the fire been provided and employed, it follows that plaintiff was not in any way damnified by the failure of defendants to keep such appliances on hand, so that what duty defendants were under to maintain fire extinguishers it is unimportant to decide. In McNally v. Colwell (Mich.) 52 N. W. 70, 30 Am. St. Rep. 494, the fire must have run down the docks extending from the mill to the lake, and on which dock the lumber was burned. A fire in the mill would naturally burn the dock and lumber, unless arrested. Under the conditions there shown, and with the ample supply of water at hand, had a means of throwing it upon the dock been provided, the spread of the fire along the dock and to the lumber might have been easily prevented, from anything appearing to the contrary. In that case the facts fairly presented the question for the jury whether, had proper appliances been provided, the fire could have been extinguished. In neither this case nor the Louisiana case cited (Hanch v. Hernandez, 41 La. Ann. 992, 6 South. 783) did the proofs show that fire extinguishers would have been unavailing if there. The McNally Case is authority for our conclusion. It was there held error to submit to the jury the question whether the defendant was negligent in knowingly employing an engineer and fireman at his mill who were incompetent to perform their duties because addicted to the use of intoxicating liquors, when their intoxication was not shown to have had any bearing upon the origin of the fire or the failure to extinguish it; and had the evidence been in the same condition as to fire extinguishers, and not only failed to show but negatived the fact that extinguishers of any kind could in any way have been made available to prevent the injury complaine the court would have held, as we do, there was nothing for the jury on such p Hawker v. Ry. Co., 15 W. Va. 642, 36 Rep. 825; Flattes v. Ry. Co., 35 Iowa, Illinois Central Ry. Co. v. Phelps, 29 Ill. Galena, etc., Ry. Co. v. Loomis, 13 Ill. 54 Am. Dec. 471.

Exceptions were reserved to the court' structions to the jury, but, in view of conclusion at which we have arrived, unnecessary to consider them. Our co sion is that the court erred in overrulin fendants' motion for a directed verdict.

Since the filing of this opinion, counse respondent, within rule time, filed a pet for rehearing. It has been carefully co ered. Upon suggestions contained in it have modified one statement and incorpo in this opinion some additional consi tions to what was originally written; bu the changes do not affect the result, a re ing is denied. The judgment of the di court is reversed. That court is directe reverse its judgment and to enter a judg of dismissal. Appellants will recover co both courts. All concur.

STATE ex rel. BOARD OF UNIVERS AND SCHOOL LANDS v. McMILLAN, State Treasurer.

(Supreme Court of North Dakota. Aug 1903.)

PUBLIC SCHOOL FUND — INVESTMENT — MAL SCHOOL BONDS—STATE DEBT—LI TION — VALIDITY — DIVERSION OF FUN FAILURE TO PROVIDE TAX LEVY.

1. The lands granted to this state by gress for educational purposes, and the ceeds of the sale thereof, constitute a p nent trust fund, the interest and incon which alone may be used by the state, and only for the support of such schools as are nated by the enabling act and the state C tution; and to the maintenance of the p nent trust fund and the faithful administ of the trust the faith and honor of the st pledged.

2. The State Normal School at Valley C not a school corporation, or a legal entit is merely one of the instrumentalities o state, through which it promotes its educa interests. The power of its trustees to co debts is limited by legislative appropria and, when contracted, such debts are deb the state.

3. Section 162 of the state Constitutio stricts the board of university and school to four classes of securities as investmen the permanent school fund, one of whi "bonds of the state of North Dakota." state obligations designated by this s as "bonds of the state of North Dakot clude only such state bonds as are vali constitutional within the constitutional deb it, and so certified by the State Audito the Secretary of State, and the payme which is secured by a provision for an irre ble tax levy in the act authorizing thei ance.

4. Chapter 49, p. 54, Laws 1903, whic thorizes the issuance of $60,000 in bon the purpose of procuring funds to erec equip buildings for the State Normal at Valley City, and appropriates a su

portion of the interest and income dedicated to the support of that institution to repay the principal and pay the interest on the sum so borrowed, is unconstitutional and void for the following reasons: (1) It authorizes the creation of a state debt in excess of the state debt limit, in violation of section 182 of the state Constitution; (2) it authorizes the creation of a state debt, and does not provide for a tax levy to pay the principal and interest, as required by said section; (3) it diverts the interest and income dedicated to the support of this institution to the payment of a state debt, in violation both of the enabling act and of the state Constitution.

5. Under the authority of this act bonds to the amount of $60,000 were issued, and the same were purchased by the board of university and school lands as an investment for the permanent fund belonging to the common schools. It is *held*, on an application to compel the State Treasurer to pay a warrant drawn for the purchase price of said bonds, that said bonds are void because of the invalidity of the act authorizing their issuance, and for the further reason that they are not certified to be within the debt limit, as required by section 187 of the Constitution, and that in refusing to pay said warrant the State Treasurer acted in accord with his legal duty as the custodian of the trust fund.

(Syllabus by the Court.)

Original application for mandamus by the state of North Dakota, on the relation of the Board of University and School Lands, against D. H. McMillan, as State Treasurer. Writ denied.

C. N. Frich, Atty. Gen., and Guy C. H. Corliss, for relator. Newman, Spalding & Stambaugh, for defendant.

YOUNG, C. J. Upon the petition of the members of the board of university and school lands an alternative writ of mandamus was issued by this court directed to D. H. McMillan, as State Treasurer, and commanding him to pay a certain warrant for $60,000 drawn upon him by the State Auditor, and payable to the treasurer of the Valley City Normal School, or show cause why he has not done so. The warrant is payable out of that portion of the permanent school fund dedicated by the enabling act and the state Constitution to the support of the common schools, and was drawn to pay the purchase price of certain "bonds of the State Normal School at Valley City," purchased by said board as an investment for the fund upon which the warrant was drawn. The bonds were authorized by and issued under chapter 49, p. 54, Laws 1903. It is not questioned that there was and is a sufficient sum of money in the treasurer's hands belonging to said fund to cover the warrant. The treasurer's refusal to pay is based entirely upon the contention that the board is without legal authority to invest this fund in the kind of obligations proposed as an investment, and, as a consequence, he cannot, as the constitutional custodian of the fund, legally pay the warrant. The allegations of the petition embodied in the writ are as follows:

"The petition of the Superintendent of Public Instruction, the Governor, Attorney General, Secretary of State, and State Auditor of the state of North Dakota, constituting, under section 156 of the state Constitution, the board of university and school lands, respectfully shows to the court: (1) That the defendant is the duly elected, qualified, and acting treasurer of this state. (2) That under the provisions of chapter 49, p. 54, Laws of 1903, entitled 'An act authorizing the board of trustees of the state normal schools to issue bonds to provide a fund for the erection and equipment of necessary additional buildings and for other improvements for the normal schools at Valley City and Mayville,' the board of trustees of the State Normal School at Valley City issued bonds to the amount of sixty thousand (60,000) dollars, which bonds were issued under the seal of the board of trustees of the said State Normal School, and were signed by its president and secretary. That they were in denominations of two thousand (2,000) dollars each, and were to draw interest at the rate of four per cent. per annum, payable annually. (3) That said bonds were offered for sale to the board of university and school lands at par, and that the said board of university and school lands decided to purchase the said bonds as an investment for that portion of the permanent school fund dedicated by the enabling act and Constitution to the support of the common schools. That there was then on hand belonging to the said fund, in the hands of this defendant, as State Treasurer, the sum of $322,413.44. (4) That in pursuance of said resolution to purchase said bonds, and for the purpose of consummating said purchase, the board of university and school lands duly authorized the State Auditor to draw his warrant on the defendant, as such State Treasurer, payable out of the said fund, and that said warrant was, by the State Auditor, drawn on the defendant, as such State Treasurer, payable out of the said fund for the purchase of the said bonds, and was, previous to delivery thereof, duly registered by the State Treasurer in a book provided for that purpose. That the said warrant on this defendant, as such State Treasurer, was payable to the treasurer of said State Normal School at said Valley City, N. D., and was duly presented to the defendant, as such State Treasurer, for payment, but that defendant refused to honor said warrant, or to pay out any moneys thereon, assigning as the sole and only reason for such refusal that the said contemplated investment of said fund in said bonds is not authorized by the Constitution of the state of North Dakota, but is unlawful. (5) That at the time of the sale of the said bonds, and at all times subsequent to January 1, 1903, the interest and income accumulating from the sale, rental, or lease of the lands granted to the said normal school were sufficient to pay the interest upon the said bonds for sixty th

sand (60,000) dollars, and also for the creation, in addition thereto, of a sinking fund with which to pay said bonds at maturity; and that the interest and income accumulating from the sale, rental, or lease of the said lands will continually increase for some years to come, so that not only will the said interest and income be adequate to the payment of the interest on said bonds at all times, but that the surplus of said interest and income, which must be used for the purpose of creating said sinking fund, will be larger each year for some years to come, and that from said surplus a sinking fund more than sufficient to discharge the said bonds at maturity will be created. (6) That ever since January 1, 1903, the debts of the state of North Dakota (within the meaning of section 182 of the Constitution) have been equal in the aggregate to the sum of two hundred thousand (200,000) dollars, exclusive of the indebtedness of the state of North Dakota at the time of the adoption of the said Constitution; and that, if the said bonds for sixty thousand (60,000) dollars, so sold by the board of trustees of the said normal school to the board of university and school lands, create a state indebtedness, within the meaning of said section 182 of the Constitution, they would exceed the debt limit fixed by said section, and would be void. (7) That said bonds so issued as aforesaid are ready for delivery. That said proposed investment is authorized by the Constitution."

The defendant, in his return, admits that there is in his hands the sum of $322,413.44, belonging to that part of the permanent school fund dedicated to the support of the common schools, and subject to investment as alleged by the relators. Defendant alleges that he has no knowledge or information sufficient to form a belief whether the interest and income accumulating from the sale, rental, or lease of the Valley City Normal School lands will continually increase, or as to whether said interest and income would be adequate to the payment of the interest on said bonds at all times, or whether said interest and income will be sufficient to provide a sinking fund for the payment of the principal of said bonds at maturity, and alleges that: "In the year 1891 said normal school at Valley City issued bonds of the same character as those described in said petition, which were payable, principal and interest, out of the interest and income accumulating from the sale, rental, or lease of the lands granted to the said normal school; and that said interest and income is not sufficient to pay the interest of said bonds, issued as aforesaid, for the sum of twenty thousand (20,000) dollars, and to create a sinking fund therefor, as provided by the act authorizing such issue, and to pay the interest on the said sum of sixty thousand (60,000) dollars and create a sinking fund as aforesaid by the act authorizing the issue thereof; and that at its session in the year 1903 the Legislature passed 'An act autho ing the State Board of Equalization to clude in the annual levy for bond interest bond sinking fund a sufficient amount to the interest and provide a sinking fund the state normal school bonds issued un the provisions of section 10, chapter 89, sion Laws of 1891,' for the purpose of cr ing a fund to meet the deficiency of said p cipal and interest, and this defendant has knowledge or information other than facts stated in said act with reference to sufficiency of said interest and income to the interest on said bonds and create a si ing fund for the payment of the princi thereof."

Defendant further alleges that the bo in question are not bonds of the state North Dakota, but are "bonds of the St Normal School at Valley City." A copy one of said bonds is attached to the ans as an exhibit, and is as follows:

"United States of America.

"Number 1.

"State of North Dakota.

"$2,000.00 $2,00

"Bonds of the State Normal School at Valley City.

"Bismarck, N. D., May 1, 1903

"Know all men by these presents, that board of trustees of the state normal sch of the state of North Dakota, for the Nor School at Valley City, acknowledges it indebted and for value received hereby pr ises to pay to the state of North Dakota bearer, the sum of two thousand dollars the first day of May, A. D. 1904, toget with interest on said sum from the date h of until paid at the rate of four per cent per annum, payable annually on the first of July of each year, upon presentation surrender of the interest coupons hereu attached as they severally become due. B principal and interest are payable at the fice of the state treasurer, in the city of marck, State of North Dakota.

"This bond is one of a series of thi bonds, numbered consecutively from one thirty inclusive, each of like amount, bec ing due on the first day of May of each ceeding year for thirty years, and is iss by the board of trustees of the state nor schools of the state of North Dakota for State Normal School at Valley City, for sole purpose of providing funds for the e tion and equipment of necessary additio buildings, and for other necessary impro ments for the State Normal School at Val City. This bond is authorized by an act the eighth legislative assembly, appro February 13th, 1903, and entitled 'An act thorizing the board of trustees of the st normal schools to issue bonds to provid fund for the erection and equipment of ne sary additional buildings and for other ne

Digitized by Google

sary improvements for the normal schools at Valley City and Mayville.'

"In witness whereof, the board of trustees of the state normal schools of the state of North Dakota has caused this bond to be signed by the president of said board, and to be attested by the secretary, and has caused the seal of said board to be hereunto affixed this 1st day of May, A. D. 1903.

"[Seal.] W. L. Stockwell President.

"Attest: E. J. Taylor, Secretary."

The act (chapter 49, pp. 54, 55, Laws 1903) under which the bonds were issued, is printed on each bond, and is as follows:

"An act authorizing the board of trustees of the state normal schools to issue bonds to provide a fund for the erection and equipment of necessary additional buildings and for other necessary improvements for the normal schools at Valley City and Mayville.

"Section 1. The board of trustees of the state normal schools, in order to provide a fund for the erection and equipment of the necessary additional buildings and other needed improvements at the normal schools at Valley City and Mayville are hereby authorized and empowered to issue bonds for such sum or sums of money as is actually needed for the purposes herein specified not exceeding sixty thousand dollars (60,000) for each of said normal schools.

"Sec. 2. Said bonds shall be designated as the 'Bonds of the State Normal School at Valley City' and 'Bonds of the State Normal School at Mayville.' They shall be issued under the seal of the board of trustees of the state normal schools and signed by its president and secretary. They shall be in denominations of two thousand dollars ($2,000) each, shall bear four per cent. interest and shall mature at such times as may be deemed advisable by said board of trustees and in not to exceed thirty years.

"Sec. 3. The interest shall be paid annually on the first day of July from the interest and income accumulating from the sale, rental and lease of the lands granted by the state to the respective state normal schools; provided if there shall not be sufficient money in each of said funds to pay such interest there is hereby appropriated a sufficient amount to meet such deficiency.

"Sec. 4. The State Treasurer is hereby authorized and required to retain out of the interest and income fund of each of said normal schools each year, first a sufficient amount to pay the annual interest upon the bonds issued for the benefit of the respective normal schools, and second, for the sinking fund to be used to pay off the bonds as they mature, an amount equal to one-thirtieth of the total of the bonds issued for the benefit of the respective normal school. He is further authorized and required to pay over and transfer quarterly to the maintenance fund of the respective normal schools any and all balances there may be remaining in said interest and income fund over and above the reservations above provided for.

"Sec. 5. These bonds shall first be offered for sale to the board of university and common school lands at par, and if not purchased by said board the board of trustees of state normal schools shall receive sealed proposals for the purchase of the same, and shall give public notice of the sale for at least thirty days preceding such sale, and the bonds shall be sold to the highest bidder. The proceeds of such sale shall be delivered to the treasurers of the respective normal schools to be used exclusively in pursuance of the provisions of this act.

"Sec. 6. Emergency. Whereas an emergency exists in that the proceeds from the sale of these bonds will be needed before the first day of July in order that the buildings be completed before the opening of the next school year, therefore this act shall take effect and be in force from and after its passage and approval.

"Approved February 13th, 1903."

This case presents but a single question for determination. That question is whether the board of university and school lands may lawfully, under the enabling act and under the state Constitution, purchase these bonds as an investment for the permanent school fund. If it may lawfully do so, the treasurer's refusal to pay the warrant was without legal excuse, and he will be coerced by mandamus to pay the same. If, on the other hand, the board is without lawful authority to invest the permanent school fund in these securities, it will be conceded that the treasurer properly refused to pay the warrant, and the writ must be denied. While the question of the legality of the proposed investment is the decisive question in the case, its determination depends upon the solution of certain preliminary questions, namely. the character of the fund proposed to be invested, the limitations upon the authority of the board of university and school lands and of the Legislature over the same, the constitutional limitations upon the power of the Legislature to contract debts, and, finally, the character of the bonds proposed as investments.

The moneys which it is proposed to invest in these bonds constitute a part of the permanent fund derived from the sale of lands granted by Congress to this state upon its admission into the Union "for the support of common schools." Section 10 of the enabling act (Act Feb. 22, 1889, c. 180; 25 Stat. 676) granted "for the support of common schools" sections numbered 16 and 36 in every township in the state; and, where such sections or parts thereof had been sold or otherwise disposed of, provision was made that other lands equivalent thereto might be selected. The exact number of acres covered by this grant is at present not known. As reported by the Land Department, it now amounts to 2,418,291 acres. In addition to

Digitized by Google

the grant of land for "the support of common schools," Congress also granted to the state 668,080 acres for other purposes; making a total grant of 3,086,371 acres. Of the 668,080 acres just referred to, 498,080 acres were apportioned by Congress in the enabling act, and for specific purposes named therein. The remaining 170,000 acres were granted to the state "for such other educational and charitable purposes as the Legislature may determine." This apportionment was made by the Constitution. The entire grant of lands for all purposes, as divided by the enabling act and the Constitution, is as follows: Capitol buildings, 82,000 acres; State University, 86,080 acres; School of Mines, 40,000 acres; Agricultural College, 130,000 acres; Normal School Valley City, 50,000 acres; Normal School Mayville, 30,000 acres; Deaf and Dumb Asylum, 40,000 acres; Hospital for Insane, 20,000 acres; Soldiers' Home, 40,000 acres; Blind Asylum, 30,000 acres; Industrial School, 40,000 acres; Scientific School, 40,000 acres; Permanent School Fund, 2,418,291 acres—total, 3,086,371 acres. The grant of lands in aid of the common schools was supplemented by a further grant. Section 13 of the enabling act provides: "That 5 per centum of the proceeds of the sales of public lands lying within said states which shall be sold by the United States subsequent to the admission of said state into the Union, after deducting all the expenses incident to the same, shall be paid to the said states, to be used as a permanent fund, the interest of which only shall be expended for the support of common schools within said states respectively." Section 11 of the enabling act provides: "That all lands herein granted for educational purposes shall be disposed of only at public sale, and at a price not less than $10 per acre, the proceeds to constitute a permanent school fund, the interest of which only shall be expended in the support of said schools. But said lands may, under such regulations as the legislatures shall prescribe, be leased for periods of not more than five years, in quantities not exceeding one section to any one person or company; and such land shall not be subject to pre-emption, homestead entry, or any other entry under the land laws of the United States, whether surveyed or unsurveyed, but shall be reserved for school purposes only." It is entirely clear from the provisions of the enabling act just quoted that the entire grant of lands to the state for educational purposes was in trust, and that the express terms of the grant require the state as trustee to maintain the permanency of the funds so granted; and, further, that it limits the state to the use of the interest of the permanent fund, and requires that such interest shall be used "only for the support of 'schools.'"

We now turn to the provisions of the Constitution relating to the grant and the trust thereby imposed. Section 205 reads as follows: "The state of North Dakota he accepts the several grants of land grante the United States to the state of North kota, by an act of Congress entitled 'An to provide for the division of Dakota two states, and to enable the people of N Dakota, South Dakota, Montana and W ington to form constitutions and state ernments, and to be admitted into the U on equal footing with the original states, to make donations of public lands to states,' under the conditions and limitat therein mentioned; reserving the right, ever, to apply to Congress for modifica of said conditions and limitations in cas necessity." Section 153: "All proceeds o public lands that have heretofore been may hereafter be granted by the Un States for the support of the common sch in this state; all such per centum as be granted by the United States on the of public lands; the proceeds of property shall fall to the state by escheat; the ceeds of all gifts and donations to the for common schools, or not otherwise ap priated by the terms of the gift, and other property otherwise acquired for mon schools, shall be and remain a perp fund for the maintenance of the com schools of the state. It shall be deem trust fund, the principal of which shall ever remain inviolate and may be incre but never diminished. The state shall r good all losses thereof." Section 154: interest and income of this fund tog with the net proceeds of all fines for v tion of state laws, and all other sums w may be added thereto by law, shall be f fully used and applied each year for the efit of the common schools of the state, shall be for this purpose apportioned an and between all the several common sc corporations of the state in proportion t number of children in each of school ag may be fixed by law, and no part of the shall ever be diverted even temporarily, this purpose or used for any other pur whatever than the maintenance of com schools for the equal benefit of all the ple of the state: provided, however, th any portion of the interest or income a said be not expended during any year, portion shall be added to and become a of the school fund." Section 155 presc the conditions upon which lands grante the support of common schools may be and also the time when they may be Section 159: "All lands, money or other erty donated, granted or received from United States or any other source for a versity, school of mines, reform school, cultural college, deaf and dumb asylum, mal school or other educational or chari institution or purpose, and the proceed all such lands and other property so rec from any source, shall be and remain petual funds, the interest and incom which, together with the rents of all

Digitized by Google

lands as may remain unsold, shall be inviolably appropriated and applied to the specific objects of the original grants or gifts. The principal of every such fund may be increased but shall never be diminished, and the interest and income only shall be used. Every such fund shall be deemed a trust fund held by the state, and the state shall make good all losses thereof." Section 160: "All lands mentioned in the preceding section shall be appraised and sold in the same manner and under the same limitations and subject to all the conditions as to price and sale as provided above for the appraisal and sale of lands for the benefit of common schools; but a distinct and separate account shall be kept by the proper officers of each of said funds: provided, that the limitations as to the time in which school land may be sold shall apply only to lands granted for the support of common schools."

Perhaps it is not necessary to state that by the acceptance of the grant for educational purposes—and it is with that grant we are concerned in this case—a trust was created, the character of which was fixed by the terms of the grant. By the mere acceptance of the grant the honor of the state was pledged to the observance of the obligation of the trust; that is, to maintain the permanency of the trust fund and to use the interest thereof only for the support of the several schools to which it was dedicated. There was no attempt on the part of the framers of the Constitution to shrink from this obligation, or avoid its restrictions. On the contrary, the Constitution declares and reiterates the declaration that all of the lands granted by Congress for educational purposes, including "all the proceeds of such lands, shall be and remain perpetual funds, the interest and income of which 'shall be inviolably appropriated and applied to the specific objects of the original grants or gifts.'" They went further, and included grants for charitable purposes; declaring that all grants to the state for educational or charitable institutions or purposes, from whatever source, shall constitute a perpetual fund, "the interest and income of which 'shall be inviolably appropriated and applied to the specific objects of the original grants or gifts.'"

What we have said in reference to the limitations imposed by the enabling act and the Constitution upon the power of the Legislature, has no application to what is known as the "capitol land grant." The funds derived from this grant are not required to be kept permanent; on the contrary, under the terms of the grant, they may be used at such times and in such manner as the Legislature may determine. This grant was made expressly "for the purpose of erecting public buildings at the capital, for legislative, executive and judicial purposes." Sections 12 and 17 of the enabling act. The only limitation upon the power of the Legislature is that the proceeds of this grant shall be used for the purposes for which it was made, to wit, the erection of buildings at the state capital.

The people of the state were not content to merely declare the character and nature of the trust. They went further, and in plain language made provisions for its safe administration. Section 156 of the state Constitution provides: "The Superintendent of Public Instruction, Governor, Attorney General, Secretary of State and State Auditor shall constitute a board of commissioners, which shall be denominated the 'Board of University and School Lands,' and, subject to the provisions of this article, and any laws that may be passed by the legislative assembly, said board shall have control of the appraisement, sale, rental and disposal of all school and university lands, and shall direct the investment of the funds arising therefrom in the hands of the State Treasurer, under the limitations in section 160 of this article." Section 162: "The moneys of the permanent school fund and other educational funds shall be invested only in bonds of school corporations within the state, bonds of the United States, bonds of the state of North Dakota, or in first mortgages on farm lands in the state, not exceeding in amount one-third of the actual value of any subdivision on which the same may be loaned, such value to be determined by the board of appraisers of school lands." Section 165 of the state Constitution is as follows: "The legislative assembly shall pass suitable laws for the safe keeping, transfer and disbursement of the state school funds; and shall require all officers charged with the same or the safe keeping thereof to give ample bonds for all moneys and funds received by them, and if any of said officers shall convert to his own use in any manner or form, or shall loan with or without interest or shall deposit in his own name, or otherwise than in the name of the state of North Dakota, or shall deposit in any banks or with any person or persons, or exchange for other funds or property any portion of the school funds aforesaid, or purposely allow any portion of the same to remain in his own hands uninvested, except in the manner prescribed by law, every such act shall constitute an embezzlement of so much of the aforesaid school funds as shall be thus taken or loaned, or deposited, or exchanged, or withheld, and shall be a felony; and any failure to pay over, produce or account for the state school funds or any part of the same entrusted to any such officer, as by law required or demanded, shall be held and be taken to be prima facie evidence of such embezzlement." Thus it is seen that the people of this state, in their solicitude for a faithful administration of the trust, have removed the control of the trust fund from legislative control, and permanently lodged it with elective officers, to wit, the Superintendent of Public Instruction, Governor, Attorney General, Secretary of State, and State Auditor. Further, they have de-

Digitized by Google

prived the Legislature, and the board as well, of the power of determining the kind of securities the trust fund shall be invested in, and for a dereliction of duty by the officers charged with the safe-keeping of the funds in any of the particulars named in section 165 they attached the punishment of a felony.

The spirit of public integrity which prompted the provision relating to the trust funds and their safe administration is equally manifest in the constitutional provisions relating to the creation of state debts. These provisions are controlling in this case. Section 182 reads as follows: "The state may, to meet casual deficits or failure in the revenue, or in case of extraordinary emergencies contract debts, but such debts shall never in the aggregate exceed the sum of $200,000, exclusive of what may be the debt of North Dakota at the time of the adoption of this Constitution. Every such debt shall be authorized by law for certain purposes to be definitely mentioned therein, and every such law shall provide for levying an annual tax sufficient to pay the interest semi-annually, and the principal within thirty years from the passage of such law, and shall specially appropriate the proceeds of such tax to the payment of said principal and interest, and such appropriation shall not be repealed nor the tax discontinued until such debt, both principal and interest, shall have been fully paid. No debt in excess of the limit named shall be incurred except for the purpose of repelling invasion, suppressing insurrection, defending the state in time of war, or to provide for public defense in case of threatened hostilities; but the issuing of new bonds to refund existing indebtedness, shall not be construed to be any part or portion of said $200,000." Section 186: "No money shall be paid out of the state treasury except upon appropriation by law and on warrant drawn by the proper officer, and no bills, claims, accounts or demands against the state or any county or other political subdivision, shall be audited, allowed or paid until a full itemized statement in writing shall be filed with the officer or officers, whose duty it may be to audit the same." Section 187: "No bond or evidence of indebtedness of the state shall be valid unless the same shall have endorsed thereon a certificate, signed by the Auditor and Secretary of State, showing that the bond or evidence of debt is issued pursuant to law and is within the debt limit."

We now turn to the question whether the bonds here in question belong to any one of the four classes to which the people of the state, by section 162 of the state Constitution, have restricted the board for the purposes of investment. That they are not bonds of the United States is apparent. Neither are they first mortgages on farm lands. It only remains, then, to inquire whether they are bonds of a school corporation or bonds of the state of North Dakota; for, if they are not included within the two classes of securities last named, clearly they are prohibited investments. It must be admitted that these bonds are of such a nondescript character that it is difficult to classify them with any instruments with which we are familiar or to which our attention has been called. That they are not bonds of a school corporation is perfectly clear, and this is frankly conceded by counsel for the relator. The act provides that they should be designated as the "bonds of the State Normal School at Valley City," and further provides that they "shall be issued under the seal of the board of trustees of the state normal schools and signed by its president and secretary," instead of "under the great seal of the state by the Governor and Treasurer, and attested by the Secretary of State," as is usual in acts authorizing the issuance of state bonds. See chapter 133, p. 307, Sess. Laws 1897; also section 1355h, Rev. Codes 1899, and chapters 27, 46, pp. 31, 51, Laws 1903. The act also requires the proceeds of the loan to be deposited with the treasurer of the normal school instead of with the State Treasurer; further, the board of trustees is granted power, within the limitations of the act, to determine the amount of the issue, and to fix the time when the bonds shall mature. These provisions indicate a legislative intent to authorize bonds which would constitute obligations of the normal school, and thus be "bonds of the state normal school" both in form and effect, and not bonds of the state. That the board of trustees so interpreted the act is shown by the form of the bonds which they prepared and issued. The copy of the bond above set out recites "that the board of trustees of the state normal schools of the state of North Dakota for the Normal School at Valley City acknowledges itself indebted and for value received hereby promises to pay" the principal of the bond, with interest. The character of the bonds, however, is not to be determined by provisions which relate to mere matters of form or to the manner of their execution, or to the name assigned to them by the Legislature, but must be determined by those provisions of the act authorizing their issuance, and upon which their validity rests, which go to the substance of the obligation. Judged by this test, it will, we think, be readily seen that they are state obligations masquerading in the name of "normal school bonds." This must be true if they have any validity whatever, for bonds of the State Normal School at Valley City are a legal impossibility. This institution is not a school corporation or a legal entity. It cannot levy and collect taxes; it owns no property; its trustees cannot contract debts except within the limits of the appropriations made by the Legislature for its support; and when such debts are contracted they are not debts of the institution, but are the debts of the state. The state is charged wih its support and maintenance as

one of the educational institutions of the state. This institution and the other state educational and charitable institutions are not legal and independent entities, but are mere agencies or instrumentalities through which the state promotes its educational and charitable interests, and for the support of which all of the taxable property of the state is chargeable; and the power of their trustees to contract debts is limited by legislative appropriations. As was said by the Supreme Court of Wisconsin in State v. Mills, 55 Wis. 229, 12 N. W. 359: "It cannot be said too emphatically, or repeated too often, that the various boards of trustees and managers of the benevolent and penal institutions of the state have no power to contract debts beyond the appropriation made by the Legislature for the support and operation of their respective institutions. A debt against one of these institutions is a debt against the state; and, if such boards could contract debts ad libitum, the constitutional limitation of state indebtedness to $100,000 (article 8, § 6) might become utterly inoperative. See Sloan v. State, 51 Wis. 623, 8 N. W. 393." See, also, Jewell Nursery Co. v. State, 4 S. D. 213, 56 N. W. 113; Weary v. State University, 42 Iowa, 335; Neil v. Board, 31 Ohio St. 15; State ex rel. v. White, 82 Ind. 278, 42 Am. Rep. 496. We therefore agree with counsel for the board that the "bonds in question are bonds of the state, or bonds of no one."

We now turn to the decisive question in the case, that is, whether these instruments are bonds of the state of North Dakota, and, of course, by that we mean valid and constitutional bonds, such as the board is authorized by section 162 to purchase as an investment for the permanent school fund. It is proper first to inquire—and the answer to this question is decisive of this case—whose obligation is evidenced by them. This question must be answered by the act authorizing their issuance. As we have seen, they are not the obligations of the normal school, for there is no such legal entity. It is apparent, therefore, that they evidence the obligations of the state, if they evidence any obligation whatever. That they are state obligations is, we think, entirely apparent, and for these reasons: First, the state authorizes their issuance; second, they are given for money borrowed by the state; third, the money to be procured from the loan is for state purposes—that is, to erect buildings for the state for one of its educational institutions; and, finally, the promise to repay the loan, both principal and interest, is made by the state. It is strenuously urged by counsel for the treasurer that "the instruments under consideration are not 'bonds' in any sense of the word, either as understood, when the Constitution was adopted, in financial exchanges and markets, or by the common people, or at common law, or under the statutes of this state; that they are merely contracts, whereby the board of trustees of the school, under the authority of the Legislature, undertakes to hypothecate the income of the institution." What merit there may be in this contention we shall not undertake to determine. Of course, if the obligations in question are not bonds within the meaning of section 162 of the state Constitution, they are prohibited investments, for that section restricts the board to investing in "bonds" of the state of North Dakota, and does not authorize the purchase of any other kind of state obligations. For the purposes of this case we shall assume that these instruments are bonds of the state of North Dakota, so far as the Legislature had power to make them so, and shall direct our inquiry to the validity of the act authorizing their issuance. Is the act constitutional? This question must be answered unhesitatingly in the negative. It would seem that the invalidity of the bonds, and the unconstitutionality of the act upon which their validity rests, must be apparent to the legal mind as well as to the mind of the average layman from a mere statement of the constitutional provisions which we have previously quoted. It should require no argument to show that the act is invalid. Its violations of the following provisions of the Constitution are manifest: (1) It authorizes the creation of a state debt in excess of the debt limit and contrary to section 182 of the Constitution; (2) it authorizes the creation of a state debt, and contains no provision "for levying an annual tax sufficient to pay the interest semiannually and the principal within thirty years," contrary to the requirements of the section last referred to; and (3) it appropriates for the payment of the principal and interest of a state debt the interest and income of the permanent fund of the normal school, which was dedicated to the support of said school by Congress and by the state Constitution, and thus diverts such interest and income from the purpose for which it was dedicated. Finally, the bonds themselves are invalid because the act authorizing them is invalid, and for the further reason that they are not certified by the auditor and secretary to be within the debt limit, as is essential to the validity of all state bonds under section 187, above quoted.

Whether the debt authorized to be created by this act is to meet a casual deficit or failure in the revenues of the state or to meet an "extraordinary emergency," so that its creation would be authorized in any event under the debt-limit section of the Constitution (section 172, before quoted), we do not determine. It is sufficient for the purposes of this case that the act authorizes a state debt in excess of the state debt limit.

We would rest the decision of this case at this point, were it not for the fact that thus far we have not considered the theory—and it is an ingenious one—upon which counsel for the board seeks to sustain the legality

Digitized by Google

the proposed investment. Counsel broadly contends—and it is the only argument possible in support of the legality of the proposed investment—that the section of the Constitution which limits the state debt to $200,000, and requires every act authorizing the creation of a state debt to provide an annual levy to pay both principal and interest, and the section which requires as an essential prerequisite to the validity of a state bond that it shall be certified to be within the debt limit, have no application whatever to these instruments. He contends, first, that the instruments are "bonds of the state of North Dakota," and are, therefore, proper investments for the permanent school fund under section 162 of the state Constitution, which authorizes the investment of such fund in such bonds; and, second, that bonds issued under this act do not create a state debt. His argument is this: They are "bonds of the state"; therefore the board is authorized to buy them. They do not create a state debt; therefore the debt-limit section of the Constitution does not apply to them. Briefly stated, counsel contends that they are bonds of the state for the purpose of sustaining them as a constitutional investment of the permanent school fund under section 162, and contends they are not state bonds or evidences of a state indebtedness for the purpose of avoiding the condemnation of section 182, which limits state indebtedness to $200,000. This contention cannot be sustained. The contention that the framers of the Constitution, and the people of this state when they adopted it, by authorizing the investment of the permanent school fund in "bonds of the state of North Dakota" (section 162), did not designate bonds of a particular kind, and that the term "bonds of the state of North Dakota" is general, and was intended to include all kinds of obligations which the ingenuity of subsequent legislatures might devise, regardless of the character or extent of the state's obligation to pay the same, finds no support in a single word or sentence of the Constitution. Indeed, such an interpretation of the Constitution does violence to its plain language. There is no ambiguity or obscurity of meaning in the several sections relating to the creation of state debts. The phrase "bonds of the state of North Dakota" imports a state debt. The common mind understands that it is a state obligation, a state debt, for the payment of which the faith and credit of the state is pledged; and it would be an insult to the intelligence of the framers of the Constitution and to the people of this state for this court to say that, when they restricted the board of university and school lands to investing the permanent school fund in "bonds of the state of North Dakota," they did not in fact restrict them to state bonds such as, so far as their essential features are concerned, were known to the framers of the Constitution and to the people at that time; that is, bonds regularly issued, within the debt limit, and so certified, and the payment of which is secured by an irrepealable tax levy. If this argument of counsel be meritorious, it is equally applicable to the other classes of investments to which the Constitution restricts the board, and there is then in fact no restriction. If an investment in "bonds of the state of North Dakota" authorizes an investment in bonds other than those known when the Constitution was adopted, then "bonds of the United States" may be extended to include instruments entirely lacking in the essential elements of such bonds. "Bonds of school corporations" may include obligations wholly unknown to the framers of the Constitution, and "first mortgages on farm lands" may be extended to include instruments wholly devoid in their essential nature of the security which such obligations afford as known to the framers of the Constitution and to the people when they adopted it. This contention is, from its mere statement, manifestly unsound. Moreover, the contention that this act does not authorize the creation of a state debt, and that these instruments do not evidence a state debt, is utterly fallacious. It is argued that both the principal and interest of these bonds are to be repaid from a special fund—that is, from the interest and income fund of the State Normal School—and that their payment is not, therefore, and cannot become, a charge upon the state or its taxpayers. With this as a premise, counsel contends that there is no state debt; that the debt is paid from a special fund, to wit, the interest and income fund; and that the state's obligation is merely to appropriate this fund, and apply it to the payment of the bonds. A vast array of cases is cited which hold that bonds issued by a municipality for improvements payable solely out of special assessments upon property benefited are not within the debt limit provision. In such cases it is quite generally held that no debt is contracted by the municipality to be paid by it. The debt is to be paid by the property benefited; that is, from the funds of individuals, and not from the funds of the municipality. The loan in such cases is really to the owners of the property benefited. The municipality acts merely as an assessing and collecting agent. A full performance of the obligation of the municipality under such a law involves it in no financial liability. The individual property owner who is benefited pays the debt. It is through a breach of its obligation, and not by a performance of it, that the municipality incurs a financial liability. There is no analogy between the principle upon which these cases are founded and the case at bar. Under the act here in question, the state itself is the borrower. It borrows for its own use, and it promises to repay the sum borrowed, with interest, and from its own funds. This act provides for payment by the state, and

Digitized by Google

not payment by individuals, as in the case of special assessments. Sections 3 and 4 of this act appropriate from the interest and income fund dedicated to the support of the State Normal School a sufficient sum to meet the obligations authorized, and, further, appropriate "out of any funds in the state treasury not otherwise appropriated" a sufficient amount to make the payment in case the interest and income is not sufficient. It requires no argument to show that this is a promise of the state to pay the principal and the interest; and, as we shall hereafter see, it is a promise to pay out of state resources, and a promise which can only be discharged by a resort to taxation. The fact that all or a portion of the debt may be paid from the interest and income fund does not change the character of the obligation, or alter its effect upon the state. The important fact is that it is paid by the state. It is not important from what fund it is payable. That is a mere matter of bookkeeping. The payments, in either event, are made by the state, and from its resources. The result would be in every respect the same if all the payments were made directly from funds derived from general taxation, and the act would be open to no more constitutional objections than it now is if the disguise were removed, and it authorized the issuance of state bonds, recognizable in form and in substance as such, and requiring the levy of an annual tax, as required by section 182 of the Constitution. Without attempting to classify these instruments, it is entirely apparent that they evidence a state debt, every dollar of which, both principal and interest, must inevitably be repaid by a resort to general taxation. The theory is that the interest and income fund will pay these bonds and the interest on them, and that they cast no burden upon the taxpayer. Our answer is that the taxpayer is compelled to pay them.

In order that the answer to so vital a question may not rest upon a mere arbitrary assertion, we may be permitted to illustrate the reasons for our answer from the practical operation of the several legislative acts which have adopted this plan. This scheme of financing state institutions had its origin in the Legislature of 1891. Chapter 89, p. 246, Laws 1891, authorized the issuance of $40,000 bonds upon this plan; $20,000 for each of the normal schools. No further bonds were authorized until the session of 1901, when $120,000 were authorized and issued. See chapters 38, 127, and 173, pp. 48, 160, and 228, of the Session Laws of 1901. The plan has evidently grown in favor, however, for the recent Legislature authorized the issuance of bonds payable upon this plan to the amount of $581,000. Now, it is assumed by counsel for the board that the obligation of these bonds will be met from the interest and income fund solely, and that no necessity can or will arise for a resort to the other funds of the state. The assumption that the interest and income fund will pay the obligations as they mature may be unwarranted, in view of the history of the loan of $20,000 made for the benefit of this institution in 1891, and payable upon this plan. The recent Legislature, prior to the passing of the act authorizing the present $60,000 issue, passed an act (chapter 125, p. 165, Laws 1903) declaring, in effect, that the former $20,000 issue should thereafter constitute a state debt, requiring the interest and principal of that loan to be paid from general taxation, authorizing a state tax levy for that purpose, and reciting in the act that the interest and income was not sufficient to pay the interest and principal upon the $20,000 and upon the proposed issue of $60,000. It may be said that this recital was true in point of fact. During the 12 years prior to that time there had been paid by the State Treasurer upon the interest on this loan the sum of $14,400. But $2,400 of this sum was paid directly from the interest and income fund. The remaining $12,000 was paid from other state funds, which were derived directly from taxation. Under the terms of the repudiating act above referred to, there is no pretense that any further portion of the interest or principal of the 1891 loan will be paid from the interest and income fund, for the act requires that the remaining eight years' interest and the entire principal shall be repaid by general taxation. It may, therefore, well be doubted whether the proposed issue of $60,000 authorized by the act under consideration can be met from the interest and income fund. It is true this fund has recently increased, and necessarily will largely increase in the future; but whether it will be adequate to meet the obligations as they mature is necessarily speculative. We shall assume, however, for the purposes of this case, that the fund will be at all times sufficient. Nevertheless, that assumption does not change the character of the obligations as a state debt, and a state debt payable by state taxation. It is still payable from state resources, and, in the last analysis, by taxation. By way of further illustration, we will consider the loan authorized by the act under consideration. The act authorizes the issuance of $60,000 four per cent., thirty-year bonds. The board of trustees has divided the principal into 30 parts, one bond maturing annually each successive year. The amount of interest which will accrue and must be paid during the 30 years, amounts to $37,200. This, with the principal, makes a total sum of $97,200, which, under the terms of the act, must be paid from the interest and income of the fund dedicated by the enabling act and the Constitution to the support of this institution. It must be apparent to every one that, if the sum of $97,200 of the funds which are available and provided for the support and maintenance of this school for the next 30 years is diverted, it will be necessary, in order to maintain the school,

Digitized by Google

that this amount shall be replaced, and, of course, this can be done only by general taxation. That no doubt may exist, let us further illustrate. Assume that the sum of $97,200, diverted and withheld, as it necessarily must be if this act is valid, is sufficient to maintain the school during the 30-year period. Is it not apparent that when this sum is withdrawn from the support of the school it will be compelled to close its doors for want of funds to sustain it, or, if it does not, that the exact sum diverted, to wit, $97,200, must be restored by general taxation for its support? Again, assume that the cost of maintenance will be double the amount of the diversion; that is, $194,400. For this purpose the state has an existing income of $97,200, derived from the interest and income dedicated to the support and maintenance of the school. The remaining $97,200 must be raised by general taxation, and that is the extent of the taxpayer's burden. Now, divert the amount necessary to pay the interest and principal of these bonds, to wit, $97,200, and what is the result? The taxpayers of the state, to meet the expense of maintaining the institution, are compelled to increase their burden to the exact amount diverted. A more forcible illustration of the true character and underlying falsity of this financial scheme will be afforded by a complete statement of the bonds authorized to be issued by the Legislature upon this plan up to date.

Year Authorized	Name of Institution	Mature in	Interest	Amount
1891.	Valley City Normal	20 years	6%	$ 20,000
	Mayville Normal	20	6	20,000
1901.	State University	20	4	50,000
	Agricultural College	20	5	50,000
	Reform School	20	6	20,000
1903.	Industrial School	20	4	40,000
	Normal School Valley City	30	4	60,000
	Normal School Mayville	30	4	60,000
	Blind Asylum	20	6	20,000
	Reform School	20	4	20,000
	Deaf and Dumb Asylum	20	4	66,000
	State University	20	4	150,000
	Agricultural College	20	4	135,000
	Academy of Science	20	4	30,000
	Total			$741,000

The principal of these bonds, together with the interest contracted to be paid, will amount approximately to $1,300,000; all of which, under the terms of the several acts au izing them, must be paid from the inte and income fund of the several state i tutions for whose benefit they are iss We will assume that the interest and inc fund will be sufficient to meet the obligat and again it is proper to say that this be a questionable assumption, when we sider that the aggregate interest and inc fund of all the institutions above na from statehood to July 1st of the present amounted to but $94,959.04. But we shal sume that these funds will be adequat pay the indebtedness of $1,300,000 repre ed by these bonds. Does it not follow n sarily that, when you withdraw this sum the support and maintenance fund of t state institutions, you must restore it? this can be done only by taxation. It is important how you name the purpose o tax so exacted. It may be termed a ta maintain the institution, or a tax to re moneys diverted from the interest an come fund. In its effect upon the taxp it is a tax imposed to pay the principal interest on money borrowed by the sta state debt, and one contracted in plain tion of the constitutional debt limit. Th ly plan—and it is one which in no argues for the validity of the act—upon w it can be said that the interest and in of these institutions will pay the obliga of these instruments without a resort to tion involves the closing the institutions the loans are made until such time as debt and interest have been discharged the interest and income fund. So long a institutions are maintained and supporte the state, and taxation is resorted to, dollar of the interest and income fund w is diverted must be restored by taxation is not suggested that it is a part of the icy of this legislation to close the doo these institutions. This particular schem finance, while indigenous to this state, i without its parallels. The state of New at an early date engaged largely in wor internal improvement. It built and o the Erie Canal, and in doing so incurr large state indebtedness, with the result the entire subject was placed under cons tional control in 1846. The net annual enue from the canal amounted approxim to $800,000. The Constitution required the net revenues should be applied as lows: First, a fixed sum to pay the int and apply on the principal of what known as the "canal debt"; second, an fixed sum to apply upon the state debt kn as the "general fund debt"; third, a de sum to the general revenue fund of the s It was then provided that, after satisf the above requirements, "the remainder o revenues of the said canals shall in each cal year be applied in such manner as Legislature shall direct to the completio the Erie Canal enlargement and the Ge Valley and Black River Canals until the

Digitized by Google

canals shall be completed." In order to hasten the completion of the canal, the Legislature of 1851 passed an act authorizing the comptroller to issue canal revenue certificates to the amount of $9,000,000, payable out of the surplus revenue of the canals above the amounts required by the constitutional provisions above referred to, and required that said certificates "shall purport on their face to be issued by virtue of this act and without any other liability, obligation or pledge on the part of the state than such as is contained in this act." Elsewhere the act provided that "the state shall in no event be liable to make up any deficiency in the canal revenue or to redeem the certificates from any other source than the canal revenues, as directed by the act." The question as to whether this act was in violation of the provisions of the Constitution forbidding the creation of a state debt in excess of $1,000,000 was presented to the Supreme Court of New York in the case of Rodman v. Munson, 13 Barb. 63, and to the Court of Appeals in Newell v. People, 7 N. Y. 9. In both cases it was held, after careful consideration, and upon cogent reasoning, that the act authorized the creation of a state debt within the meaning of the Constitution, and this although the act in terms attempted to exempt the state from liability for any deficiency that might arise in the fund pledged for its payment. In addition to other reasons, the act was held to violate the Constitution in two respects: (1) It applied a part of the revenues to the payment of interest, instead of to the completion work, and (2) it authorized the contracting of a debt by the state in excess of the state debt limit. Ruggles, C. J., in discussing the question whether it created a state debt, used the following language, which meets our full approval: "It makes no difference whether the debt is contracted on the general credit of the state or on the credit of a fund belonging to the state. When the interest on a loan is raised by a tax it comes from the pockets of the people individually, when it is paid out of a fund belonging to the people, it is paid out of their common purse. In respect to the profit and loss of the transaction, the objection is as great to the one mode of borrowing as to the other. The chief object of the restraint imposed by the twelfth section of article 7 of the Constitution [the debt-limit section] upon the contracting of public debt was to protect the people against the exhausting burthen of paying interest." Johnson, J., in a concurring opinion, said: "If language has any meaning, the legal effect of the act, if valid, is at least to devote so much of the surplus revenues of the canals as shall actually be received after 1854 to the creation of a fund to pay the canal revenue certificates and the interest thereon. If this can be done in regard to one source of revenue, we see no reason why the same thing may not be done in regard to every source of revenue of the state, including not only all revenue which may arise from property, but also all which may be realized by the exercise of the power of taxation. Such an anticipation of revenue would no more create a debt than this bill does. It may be objected that there is a distinction between a pledge of the revenues of property owned by the state and of the revenues to be derived from taxation; but the distinction does not affect the question. Whatever consumes the revenues of the property of the state tends to render a resort to taxation necessary just to the extent to which the revenues from property have been consumed. It is, therefore, a matter of entire indifference whether one or another part of the resources of the state is drawn upon; for the substantial effect upon the financial condition of the state is the same in either case. If the constitutional provision against incurring debts permits such a scheme as this to be effectual, it is of small moment to inquire what it prohibits, for it provides no practical restraint whatever upon the power of the Legislature. To attribute such an intention to the convention or to the people as to permit the one and prohibit the other is to attribute to them an entire incapacity to comprehend the subject on which they were acting, and the effect of their own language. * * * State obligations assume every form which can tempt the possessor of money to part with it to the government, and are varied from time to time as one or the other seems most likely to accomplish the purpose of putting out promises and getting money in return. In all these forms one common attribute is found, and one only, to wit, that, in consideration of money advanced to the state, the state promises whatever it is that will be most likely to procure money to be advanced, it matters not what; and that which is thus promised is debt. It may relate only to the income of particular property, or it may embrace the whole resources of the state. The extent of the obligation does not affect or qualify its nature. So long as there is an obligation assumed by the state, it constitutes a debt; something due from the state." We also quote from the concurring opinion of Edmunds, J. Upon this point he said: "It is said that it is not a debt, but merely anticipating the resources of the state as derived from the canals. Now, it seems to me that all debt, whether by individuals or states, is merely an anticipation of resources. Then, again, it is said that it is no debt because only a portion of the resources of the state are devoted to the repayment. Does the fact that every householder has certain property that is not liable for the payment of his debts destroy, or even change, the character of the obligation that rests upon him to repay money that he has borrowed? These, and such like suggestions, which were made to us on the argument, have not had the effect to persuade me that borrowing money is not contracting

Digitized by Google

a debt." The views of Brown, J., who wrote the opinion in Rodman v. Munson, supra, in which the same act was involved, are expressed in language equally clear: "I cannot do otherwise than regard it as a loan—a loan of money to be repaid at a future day; not from the taxable property of the people of the state, or from the resources and revenues of the state generally, but qualifiedly and specially from that portion of its resources known as the 'remainders of the canal revenues.' There cannot be a loan of money without a lender and a borrower, and there cannot be a contract of lending without creating a debt and an obligation to repay in some form and to some extent. The time of payment may be postponed to a distant day. The contract may provide that payment may be made in property, in current coin, or in a depreciated currency. It may be payable, as in the case of the canal certificates, from the proceeds of the income of certain specific property, but it remains a debt notwithstanding. The particular form or medium of payment, or the specific source from whence the means of payment is to be derived, may lessen or circumscribe the obligation of the debtor, but it cannot efface the obligation, or transform it into something which is to be recognized by another name, until the source from whence it is to proceed has failed, and the means of its payment is extinguished."

The same principle was involved in City of Joliet v. Alexander (Ill.) 62 N. E. 861. The city of Joliet owned a system of waterworks which netted an annual income of about $10,000. It desired to extend and improve the system. The city indebtedness was up to the constitutional debt limit, and the city council authorized the issuance of water fund certificates to the amount of $240,000, to be paid out of the waterworks fund, to which they were in terms limited; that is, it pledged the revenues of the plant, and mortgaged the plant itself to secure the loans evidenced by the certificates. It was held that the ordinance violated the constitutional debt-limit provision. It was said that, although no action could be maintained against the city, still, in common understanding, the certificates constituted a debt. "Where one party occupies the position of creditor and another of debtor, there is, in the common understanding, a debt. The state is not liable to be sued by its citizens upon any of its obligations, but no one would think of saying that the state is not indebted where it has issued bonds or certificates of indebtedness, and where there is a legal, moral, or equitable obligation to pay. * * * One who pawns or pledges his property, and who will lose the property if he does not pay, is indebted, although the creditor has nothing but the security of the property; and so, also, is a mortgagor who is liable to lose his property if he does not pay the money secured by the mortgage. No one would agree to the proposition that a city could o money by mortgaging the city hall, the l ings of the fire department, or other pro of the city, without a promise to pay, b as to enable the creditor to take the satisfaction of the loan, under a statut thorizing such action, and yet not creat indebtedness of the city. We see no d ence between mortgaging the public buil and property of the city and mortgagi system of waterworks. * * * The nance proposes to take the income no rived from it, amounting to about $10, year, and devote it to the payment of th tificates. This is existing property an come of the city, derived annually fro present system of waterworks, indepe of the extension, and in no manner res from or depending upon it. The city lose property in the form of establishe come for the purpose of paying the c cates. If the city, being indebted beyon constitutional limit, can issue certificates able out of that fund without creati debt, it would be equally within its pow issue obligations by pledging the fun rived from drawshop licenses, or licenses hackmen, peddlers, theaters, or amusen or any other funds of the city. All o revenues of the city, except such as wou derived from general taxation, might in way be pledged or mortgaged for long to come; and we apprehend that no would be found to say that such a sc would not be a mere evasion of the C tution. * * * It does not make an ference that the certificates are payabl of the special fund, if the city is the of the fund. All its obligations are pa out of some particular fund. The city cil is required, in raising money by tax to make appropriations, specifying th jects and purposes for which they are and the amount appropriated for each and purpose. The money and appropr raised for one purpose cannot be appli any other, and the accounts of each fun appropriation, and the debits and credit longing thereto, must be kept in a sep account. The debts chargeable to a pa lar fund are payable only out of that and it makes no difference what fund are chargeable to or payable out of, fund is one which belongs to the city. The principle involved in special assessn under which the warrants issued by a ci not constitute indebtedness of a city, c be applied to this case. The city is way liable for their payment, and never the fund out of which they are paid. v. City of Indianapolis, 124 Ind. 292, E. 788, 7 L. R. A. 681. The improve when made, becomes the property o city, but the cost and expense fall upo property holder. If more should be coll than will pay the warrants, it is rebat the property owners. If the warrant not paid, the remedy is confined to the

Digitized by Google

erty of individuals. A special assessment is a lien upon individual property, and not upon property of the city; but in this case the holders of certificates would have a right to take and appropriate a pre-existing income of the city for the payment of the certificates, and also to enforce payment by a sale of property of the city. The certificates would be in no sense chargeable upon the property of individuals, but solely upon the income and property of the city, including property already owned by the city." The case of Mayor of Baltimore v. Gill, 31 Md. 375, 390, is to the same effect, and we know of no cases in which the soundness of the reasoning of these cases has been questioned.

It was contended by counsel for the board "that the contemporaneous construction of all the departments of the state government settles the legality of the issue of these bonds and the investment of these funds in them." To this we cannot assent. The rule of construction which permits courts to resort to contemporaneous construction by nonjudicial officers has no application here. It is only when the language of the law or of the Constitution which is to be construed is ambiguous and doubtful that courts are authorized to resort to such extrinsic sources of interpretation. To follow the practical construction placed upon their authority by the Legislature and by the officers charged with the duty of administering this trust would be to abolish the plain provisions of the Constitution without the formality of taking a popular vote. The true rule is stated in Cooley's Const. Lim. 83, as follows: "Contemporary construction * * * can never abrogate the text; it can never fritter away its obvious sense; it can never narrow down its true limitations; it can never enlarge its natural boundaries. * * * Acquiescence for no length of time can legalize a clear usurpation of power where the people have plainly expressed their will in the Constitution, and appointed tribunals to enforce it."

The question whether the interest and income dedicated by Congress "to be expended in the support of" this and the other educational institutions of the state can lawfully be used to erect buildings and make permanent improvements, or whether it can only be used for current expenses, was discussed at considerable length by counsel. On this point the Supreme Court of Washington, in reference to the interest and income fund belonging to the common schools, in Sheldon v. Purdy, 49 Pac. 230, said: "This fund, under the Constitution, is devoted to the support of the public schools. That portion coming from the irreducible common school fund is devoted to the payment of current expenses. The building of new schoolhouses and the purchase of schoolhouse sites do not come within any authorized signification of 'current expenses.' Neither do they come within any well-defined acceptation of 'support of the common schools.' Both the terms 'support' and 'current expenses,' when applied to the common schools of this state, mean continuing regular expenditures for the maintenance of the schools. Building a new schoolhouse and purchasing a site, while at times necessary and proper, are, as a rule, unusual and extraordinary expenditures." Whether this construction should govern in this state we shall not determine. This question is not involved in this case. The act under consideration does not appropriate the interest and income of the normal school to erect buildings. On the contrary, under the terms of this act, the state borrows money and erects the buildings from the borrowed funds, and the act appropriates the interest and income of the institution, not to erect the building, but to pay the debt which the state has contracted for the borrowed money. Under this act the state proposes to borrow $60,000, and invest it in buildings and equipments, and to meet the obligations of the loan it appropriates from the interest and income fund of this institution, dedicated to its support, the sum of $97,200, to pay the debt thereby contracted. It does not appropriate the funds, either to erect buildings or to pay current expenses, but to pay the principal and interest of a state debt. The people of this state, in their Constitution, in plain language limited the authority of the Legislature to contract state debts to $200,000, and in language equally plain they restricted the board of university and school lands to four kinds of securities for investing the permanent educational funds. If, as is contended, securities of the kind designated by the Constitution cannot be had in sufficient amount to absorb the funds available for investment, the people alone can furnish the remedy by an amendment to the Constitution. Indeed, an amendment was proposed by the recent Legislature, and referred to the next Legislature, which, if approved by the people, will authorize the board of university and school lands to invest the moneys of the permanent school funds and other educational funds in bonds of counties, townships, and municipal bonds, in addition to these classes now authorized. So, too, if the debt limit is in fact too low, the people alone can remove the limitation. The Legislature cannot repeal it, or amend it, or nullify it by evasion. The question of the state debt limit was the subject of extended consideration by the members of the constitutional convention. Some favored placing no restriction upon legislative power; others favored a limitation as low as $50,000. As a result of compromise, the amount to which the Legislature might contract was limited to $200,000, and for the further protection of the credit of the state it was required that the act authorizing the creation of the debt should make provision for payment of the principal and interest by an irrepealable tax levy; and, further, that "no bond or evidence of indebtedness by the state shall be valid" unless the same shall have

Digitized by Google

indorsed thereon a certificate showing that it is within the debt limit. The fixing of the state debt limit was and is a matter for the people to determine for themselves as a matter of state policy. They saw fit to fix it at $200,000, and until it is altered by them it must be respected by the Legislature. The three states admitted into the Union with the state under the same enabling act fixed their debt limits as follows: Montana and South Dakota at $100,000, Washington $400,000. California, Nebraska, and Wisconsin each have a debt limit of $100,000, Minnesota $250,000, and Michigan $50,000. By a comparison of population and resources, it can hardly be said that the framers of our Constitution were ungenerous in the limit placed upon legislative power.

It is patent that the board of university and school lands, in purchasing these bonds, merely followed the financial policy of the Legislature. The act under consideration, while it does not command the board to purchase the bonds, for the Legislature has no such power under the Constitution, commands that they "shall first be offered for sale to the board." Indeed, it is not too much to say that it was the legislative purpose, in authorizing the issuance of this class of bonds, to have the permanent educational funds invested in them. In yielding to this legislative policy, the board was clearly in error, and in doing so violated the plain provisions of the Constitution, which mark the limit of their authority and prescribe their duty. When the Constitution speaks, its voice is supreme, and its mandates are to be obeyed by all departments and all officers of the state government.

The members of this court are not unmindful of the embarrassment to this and other state institutions which are looking to moneys derived from these proposed loans for buildings and improvements which will follow our decision. This will be temporary, however, and is of small consequence compared with the permanent injury which would be done to the people of the state if the courts, to which they have committed the preservation of their constitutional rights and the integrity of the Constitution itself, should fail in the performance of their duty. It follows from what we have said that the State Treasurer, as the custodian of the permanent school fund, acted in accord with his legal duty in refusing to pay the warrant drawn for the proposed illegal investment.

The writ prayed for will be denied. All concur.

WRIGHT v. MINNEAPOLIS, ST. P. & S. S. M. RY. CO.

(Supreme Court of North Dakota. June 27, 1903.)

RAILROADS—NEGLIGENT KILLING OF CATTLE—PRESUMPTION OF NEGLIGENCE—CONTRIBUTORY NEGLIGENCE.

1. Where plaintiff, in an action for the negligent killing of cattle by a railroad train, made proof of his ownership of the cattle, their value, and the fact of their having been killed by a train, a prima facie presumption of negligence was established without further proof. The statute, section 2978, Rev. Codes 1899, creates a presumption of negligence from the fact of killing by the cars.

2. Where plaintiff, at a time when it was unlawful for stock to be at large, turned his horses out, with knowledge of their habit of going upon the railroad right of way, yet took no means of herding them or keeping them off from the railroad track which ran through and across his land and in close proximity to and in plain view from his house, and where no duty was imposed upon the railroad company to fence its right of way, he was guilty of such contributory negligence as will defeat an action for the killing of a horse by one of defendant's trains.

(Syllabus by the Court.)

Appeal from District Court, Barnes County; Glaspell, Judge.

Action by F. P. Wright against the Minneapolis, St. Paul & Sault Ste. Marie Railway Company for the killing of plaintiff's stock. Verdict and judgment for plaintiff. From an order denying its motion for a new trial, defendant appeals. Reversed.

Lee Combs, for appellant. Lockerby & White and E. H. Wright, for respondent.

COCHRANE, J. Plaintiff's farm is crossed by defendant's railway in a northwesterly direction. A public road or highway runs north and south through plaintiff's farm, crossing the railroad track 30 rods northwest of plaintiff's house. From this road, crossing eastward, defendant's track is fenced on both sides to a point beyond the east boundary of plaintiff's land, but at the east end these fences are not connected by an end fence. At the highway crossing there was a cattle guard between the rails, and the space between the cattle guard on either side of the track and the fence was closed. This cattle guard was not sufficient to turn cattle or stock, but plaintiff's stock frequently walked over it. It was conceded that there was no duty on defendant to fence its right of way. On March 2, 1901, two cows, valued at $30 each, belonging to plaintiff, were killed by defendant's trains. On April 14, 1901, a horse of plaintiff's valued at $150, was found near the railroad track with his legs broken, so that he had to be shot. After a verdict for plaintiff for the full value of the property claimed, defendant moved for a new trial because of the insufficiency of the evidence to justify the verdict. The trial court denied the motion of defendant upon condition of plaintiff's remitting $30 of his verdict, the value of one of the cows. The remittitur was made, and defendant appealed from the judgment entered on the verdict.

In making out his case as to the killing of the cows, plaintiff made proof of his ownership and the value of the cows, that they were killed by defendant's trains, but offered no evidence tending to show any negligence by defendant or its employés. He relied upon

Digitized by Google

¶ 2. See Railroads, vol. 41, Cent. Dig. §§ 1522, 1523.

the statutory presumption of negligence raised by the fact of such killing, as he had a right to do in the first instance. Section 2978, Rev. Codes 1899; Hodgins v. Railway Company, 3 N. D. 382, 56 N. W. 139; Bishop v. Railway Company, 4 N. D. 536, 62 N. W. 605.

Defendant, to overcome the prima facie case so made by its adversary, introduced as witnesses the engineer and fireman of the passenger train No. 108, which passed the place where these cattle were killed, going east, on the morning of March 2, 1901. The testimony of these witnesses disclosed the killing of one only of the cows by this train, but under circumstances which, in the judgment of the trial court, fully overcame the statutory presumption of negligence, and entitled the defendant to a discharge as to this part of plaintiff's demand. Hodgins v. Railway Company, 3 N. D. 382, 56 N. W. 139. The remittitur of $30, ordered by the trial court on the motion for a new trial, was for the value of this cow. As to the second cow included in the verdict, the evidence was such as to indicate that it was killed by a train going west, and therefore could not have been killed by passenger train No. 108, which killed the first one. This second cow was found dead near the track, about two rods west of the highway crossing. From a point about 25 rods east of this crossing there were footmarks for seven or eight rods, where "the cow had made great leaps along the track"; also evidence indicating that she had been dragged west along the track 15 rods, leaving marks of blood, hair, horns, and hide on the track, to the point near which the broken and bruised body was found. This evidence is not reconcilable with the theory that the cow was killed by a train moving in an easterly direction. The jury must have found, as they had a right to do if they believed this evidence, that this cow was killed by some other train, and not by passenger train No. 108. Defendant offered no evidence to meet this condition of the proof. The statutory presumption of negligence from the killing of this cow by defendant's train was not overcome, and is sufficient to sustain the verdict for her value.

As a second cause of action, plaintiff sought to raise against the defendant the statutory presumption of negligence by proof of circumstances tending to show that the horse, the subject of his second cause of action, was injured through coming in contact with the cars. No direct proof of this fact was made. The circumstances proven were consistent with, and render probable, the conclusion that the horse was injured through being struck by one of defendant's trains, as alleged in the complaint, but such circumstances do not exclude the possibility that the horse became frightened at the train or some other object, and received its injuries by running over the cattle guard, or in some other way. Assuming, for the purposes of this opinion, that a prima facie case of negligence was made out by these proofs, as against this plaintiff's evidence discloses a clear case of contributory negligence, which must defeat his recovery as a matter of law. Between April 1st and November 1st it was unlawful for stock to be at large. Ely v. Rosholt, 11 N. D. 559, 93 N. W. 864. Plaintiff's horse was a trespasser upon defendant's right of way, and as to it the measure of defendant's duty was to exercise ordinary care not to injure it after it was discovered to be in a place of danger. Defendant's employés, in operating its train, were not required to keep a lookout for trespassing stock. Bostwick v. Railway Company, 2 N. D. 450, 51 N. W. 781; Hodgins v. Railway Company, 3 N. D. 389, 56 N. W. 139; O'Leary v. Elevator Company, 7 N. D. 554, 75 N. W. 919, 41 L. R. A. 677. Plaintiff's land was on both sides of the railroad track, the land north of the right of way was open prairie, his house in plain view of and within 30 rods of the track. The fence and cattle guards at the west end of the railroad fence at the highway crossing were insufficient to turn stock. Plaintiff's horses and cattle walked over this cattle guard without let or hindrance. At the east end of the fence there was nothing to prevent the stock going onto the right of way. Plaintiff's stock were in the habit of going onto the right of way over the cattle guard, and had done so all winter. He had seen them do so a good many times up to the day of the killing. Plaintiff knew that his horses, when they went onto the right of way and along the railroad track, were in danger, and he usually drove them out when he saw them there. Three weeks before this horse was injured he had the two cows hereinbefore mentioned killed on this right of way, yet he turned his horses loose on this 14th day of April, without watch or attendant, to follow what he speaks of as the "habit" of going onto the right of way. On April 14th both plaintiff and his hired man saw his horses on the track at 1 p. m., yet neither made any endeavor, so far as the evidence shows, to drive them out of their plain exposure to danger. Plaintiff was guilty of the grossest kind of negligence in permitting his horses to run at large under these circumstances. He turned them out, in defiance of the law prohibiting their being at large, into a place of known danger, with knowledge of their habit of going onto the track, there to become a menace to the safety of the traveling public as well as to the property rights of the common carrier. The law and the Golden Rule require that parties find a safer method than this of marketing their stock. Peterson v. Railway Company (Wis.) 56 N. W. 639; Carey v. Railway Company (Wis.) 20 N. W. 648; Richardson v. Railway Company (Wis.) 14 N. W. 176; McMullan v. Dickinson Company (Minn.) 65 N. W. 663; La Flamme v. Railway Company (Mich.) 67 N. W. 556; Robinson v. Railwr

Company (Mich.) 44 N. W. 779, 19 Am. St. Rep. 174; Niemann v. Railway Company (Mich.) 44 N. W. 1049; Hanna v. Railway Company (Ind.) 21 N. E. 903; Railway Company v. Skinner, 19 Pa. 303, 57 Am. Dec. 654; St. Louis, etc., Co. v. Monday (Ark.) 4 S. W. 784; Chicago, etc., Ry. Co. v. Goss, 17 Wis. 433, 84 Am. Dec. 755. Defendant's request for a directed verdict as to the second cause of action should have been granted.

The judgment of the district court is reversed. That court is directed to set aside its judgment and to order judgment for the plaintiff for $30, conditioned upon his filing a remittitur for $150 of the amount of his verdict, this representing the value of the horse; otherwise to order a new trial. Appellant will recover costs of this appeal. All concur.

CRANE v. ODEGARD.*

(Supreme Court of North Dakota. June 23, 1903.)

COSTS — APPEAL — BRIEFS — REARGUMENT—ATTORNEY'S FEES—MOTION TO RETAX COSTS—ALLOWANCE OF COSTS—ABUSE OF DISCRETION.

1. Under subdivision 5, § 5575, Rev. Codes 1899, the party prevailing in this court is entitled to recover, as part of his costs and disbursements in case of a reargument, the same amount for the argument on the rehearing as is allowed for the original argument.

2. The fact that briefs have been served and filed out of time, when done by leave of court, does not defeat the right of the prevailing party to have the cost of printing the same taxed as part of his costs and disbursements.

3. Section 5589, Rev. Codes 1899, gives to district courts power to award motion costs in their discretion in a sum not to exceed $25. The allowance in this case of $15 upon a denial of appellant's motion to retax costs was not an abuse of discretion.

(Syllabus by the Court.)

Appeal from District Court, Griggs County; S. L. Glaspell, Judge.

Action by Maynard Crane against John T. Odegard. From an order affirming the taxation of costs on a remittitur from the Supreme Court after an unsuccessful appeal by plaintiff, he again appeals. Affirmed.

J. E. Robinson, for appellant. Newman, Spalding & Stambaugh, for respondent.

YOUNG, C. J. Plaintiff appeals from an order of the district court of Griggs county affirming the taxation of costs in this case by the clerk of that court upon a remittitur from this court. The controversy is over costs which accrued in this court. The case was argued twice. At the first argument three motions were made by counsel for respondent, one of which was to strike out the appellant's statement of case and affirm the judgment of the lower court. The motion was sustained. Plaintiff petitioned for a rehearing. The petition was granted, and the case was fully reargued at the September, 1902, term, resulting in a dismissal of p tiff's appeal and affirmance of the judgm See Crane v. Odegard, 11 N. D. 342, 91 N 962.

The items of cost which are objecte are $15, attorneys' fee allowed for the gument, and $27.75 for a printed brief by respondent at the rehearing upon the tions. Both items, in our opinion, were erly allowed.

The allowance of $15 attorneys' fee fo original argument, and $15 for the argu upon the rehearing, was proper under tion 5575, Rev. Codes 1899. This section adopted in this jurisdiction from New and, under a well-established rule of cons tion, we are deemed to have taken it wit construction theretofore placed upon it b courts of that state. Prior to its ado here, it had been construed as authorizi allowance of the statutory attorneys' fe on a reargument as well as upon the ori argument. Sweet v. Chapman, 53 Prac. 253 (decided in 1877); Guckenh et al. v. Angevine, 16 Hun, 453. The statute is in force in South Dakota, an been held to authorize the prevailing to recover, as a part of his costs and disb ments for argument on rehearing, a equal to the amount allowed for the or argument. Kirby v. Western Union graph Company (S. D.) 65 N. W. 482; B v. Edmonds (S. D.) 66 N. W. 310, 59 Am Rep. 762. It must be conceded that the ute is not plain, and its meaning can b certained only by construction. It n provides: "* * * for argument, f dollars. * * *" The allowance of a torneys' fee for the argument upon a re ing is altogether just, and does no vio to the language of the statute. We wil therefore, depart from the construction p upon it by the courts of New York and o sister state.

The item for printing the brief subm by respondent upon the motions was a proper allowance. The brief was serve filed by leave of court, and was such a as was required to be printed by rule the Revised Rules of this court. 74 N. The fact that it was not served and fil days before the term does not remo from the class of briefs which are re to be printed, or render the costs of ing the same an improper item of cost is always in the power of the court to mit the service and filing of briefs o time.

The trial court, in overruling the lant's motion to retax the costs, allowe respondent $15 for motion costs, and t assigned as error. The assignment is out merit. Section 5589, Rev. Codes 1899 vides that: "Upon a motion in an act proceeding costs may be awarded, not ceed twenty-five dollars, either absolut to abide the event of the action, to any in the discretion of the court." The a

*Rehearing denied July 23, 1903.

Digitized by Google

allowed was within the statutory limit. There was no abuse of discretion.

Order affirmed. All concur.

MONTGOMERY v. WHITBECK.

(Supreme Court of North Dakota. Aug. 7, 1903.)

MUTUAL INSURANCE COMPANIES—ORGANIZATION—PREVIOUS CONTRACT OF INSURANCE—AUTHORITY OF PROMOTERS — STATUTORY REQUIREMENTS — NOTICE — EFFECT OF DISREGARD—ULTRA VIRES—ESTOPPEL.

1. The promoters of a mutual insurance company are authorized and required to take applications for $200,000 of insurance before the company is organized, but such promoters have no authority to bind the corporation by any kind of contract before it is organized and authorized to do business.

2. A policy of insurance, signed with the names of the president and secretary of the corporation, and delivered to an applicant for membership before the corporation has come into existence and before officers could be elected or the corporation enter into binding contracts, is not enforceable against the company after it has been organized and authorized to do business.

3. Where the statute upon which a mutual insurance company was organized required it to charge and collect upon its policies the full mutual premium in cash or notes absolutely payable, and in its by-laws to fix the contingent mutual liability of its members for the payment of losses and expenses not provided for by its cash funds, and that such contingent liability of each member should not be less in amount and should be in addition to the cash premium written into the policy, and that the total liability of a policy holder should be legibly stated on the back of each policy, a total disregard of each of these requirements in the issuance of its policies rendered the policies void, as in conflict with the statute, and no assessment for losses could be made or enforced thereunder.

4. Every person applying for insurance and membership in a mutual insurance company must take notice of the law of the state under which it is organized and is authorized to do business. This statute, the articles of incorporation, by-laws, application for insurance, and the policy each become parts of the contract and binding upon the member.

5. Where all policy holders in a mutual insurance company are on the same footing, none with equities superior to his associates growing out of the business done in defiance of statutory requirements, no estoppel will be indulged against any member asserting the ultra vires nature of the business done.

6. The doctrine of estoppel in pais does not extend so far as to enable a person or corporation to do in effect what is forbidden by law, or what they are otherwise incapable of doing, and therefore a party to a contract with a mutual insurance corporation, made in violation of the letter and policy of the statute under which the corporation is organized and authorized to do business, is not estopped to show its illegality for the purpose of preventing a recovery upon it.

(Syllabus by the Court.)

Appeal from District Court, Richland County; Lauder, Judge.

Action by George S. Montgomery, as receiver of the Red River Valley Mutual Hail Insurance Company of North Dakota, against Andrew Whitbeck, to recover an assessment upon a policy. Plaintiff recovered in justice court, and afterwards, on appeal to the district court, a verdict was returned in his favor by direction. Defendant appeals from the judgment entered upon the verdict. Reversed.

Lee Combs, for appellant. Purcell & Bradley and Charles E. Wolfe, for respondent.

COCHRANE, J. The Red River Valley Mutual Hail Insurance Company of North Dakota was organized as a mutual insurance company under the provisions of chapter 14 of the Civil Code, and received its certificate of authority to do an insurance business on the 23d day of April, 1898. Defendant signed a written application for insurance and membership in this company on April 14, 1898, and his policy of insurance was executed and delivered to him on the same day. By his application defendant stipulated to pay all just assessments, not to exceed 5 per cent. of the face of his policy, or $60, to be governed by the articles of incorporation and by-laws of the company, his insurance to run for five years, beginning on April 14, 1898, and describing the land upon which the crops were to be grown. As a part of the transaction, and to cover his membership fee, all premiums and assessments, he executed and delivered to the party taking his application a note in the following terms: "$60. Courtenay, N. D., April 14, 1898. On or before the first day of October, for value received, I promise to pay to the order of the Red River Valley Mutual Hail Insurance Company of North Dakota the sum of sixty dollars, or such portion thereof as may be assessed on my policy by the officers of said company for payment of expenses and losses by hail according to the by-laws, rules and regulations of said company, with interest at the rate of eight per cent. per annum from the maturity hereof, payable at the office of the company at Wahpeton, N. D. There is included in this note a membership fee of ——. Section 20, Twp. 142, range 62; P. O. Courtenay, N. D. Andrew Whitbeck. Policy Number 1302. Non-negotiable." His certificate of indemnity and membership delivered to him in exchange for his note and application was in the following language:

"The Red River Valley Mutual Hail Insurance Company of North Dakota, by this certificate, insures Andrew Whitbeck, of Courtenay P. O., County of Stutsman, State of North Dakota, his heirs and assigns, against loss or damage to growing crops by hail, commencing at noon on the 14th day of April, 1898, and ending January 1st, 1903, in accordance with the articles of incorporation and by-laws of this company, on the following described premises:

Acres.	Quarter.	Section.	Township.	Range.	County.	Amt.
160	S. E.	20	142	62	Stutsman	$600.00
	N. E.	20	142	62	Stutsman	600.00

¶ 4. See Insurance, vol. 23, Cent. Dig. § 69.

Digitized by Google

"Loss, if any, payable to Andrew Whitbeck as his interest may appear. This insurance is based upon the written application of the assured, and upon the approval whereof the Red River Valley Mutual Hail Insurance Company of North Dakota has caused these presents to be signed by its president and attested by its secretary at its office in the city of Wahpeton. G. W. Pease, President.

"Attest: B. J. Howland, Secretary."

The articles of incorporation and by-laws were printed upon the back of this policy; also a notice as follows: "The assured is hereby notified that by virtue of this policy he is a member of the Red River Valley Mutual Hail Insurance Company of North Dakota, and that the annual meetings of such company are held at its home office in the city of Wahpeton, Richland county, North Dakota, on the second Wednesday of each November of each year, at 10 o'clock a. m."

Plaintiff was appointed receiver of this company December 29, 1899. Its assets consisted entirely of notes in the form of the one hereinbefore set forth. The action was to recover an assessment attempted by the directors in September, 1899, to meet losses for that year. The same form of notes and policies was issued to all members of the association. The certificate of insurance and membership proven in this case bears the signature of the president and secretary, and has indorsed upon its back what purports to be the by-laws of the corporation, and it was delivered to the defendant nine days before the corporation received its certificate from the commissioner of insurance authorizing it to do business or to issue policies. Section 3090, Rev. Codes.

The promoters of mutual insurance societies are authorized, and required, as a preliminary to organization, to take applications for $200,000 of insurance in not less than 100 separate risks before a policy can be issued. Section 3104, Rev. Codes. The purpose of this is, doubtless, to secure at the start a fund from the cash premiums sufficient for current expenses and early losses. Appellant, from the date of his application, must have been one of the number which the promoters of this enterprise secured as an advance subscriber. There is no evidence of a redelivery of the policy after the corporation was authorized to do business; nor was any cash premium paid or note absolutely payable given by the defendant after the legal organization of the company, if any was effected. "That a corporation should have a full and complete organization and existence as an entity before it can enter into any kind of a contract or transact any business, would seem to be self-evident. Until organized, it has no being, franchises, or faculties. Nor do those engaged in bringing it into being have any powers to bind it by contract, unless so authorized by its charter. Until organized as authorized by the charter, there is not a corporation. By its birth it for the first time acquires its faculties to transact its business and perform its functions. * * * If it was intended that the application for the policy and the giving of the premium note should constitute a contract to insure, such a provision would not have been enacted; but by its adoption it is manifest that the general assembly intended that the application and note should be held simply to be acted upon after the organization should be completed. It was simply a proposition or an application for a policy after the organization should be had and the company authorized to take risks and issue policies. Beyond that the incorporators had no power to bind the future company." Gent v. Mfg., etc., Ins. Co., 107 Ill. 658; Farmers' Mut. Ins. Co. v. Burch (S. C.) 24 S. E. 503; Lagrone v. Timmerman (S. C.) 24 S. E. 290. The reading of the statute is plain. The certificate of the commissioner of insurance, when issued and recorded, "shall be its authority to commence business and issue policies." Had the statute stated that no policy could be issued until the certificate from the commissioner had been obtained, its mandate could not have been more readily understood. Montgomery v. Harker, 9 N. D. 527, 84 N. W. 369.

We need not pause upon the proposition that the corporation retained the nonnegotiable contract of appellant, and treated the policy as if redelivered after it received its certificate of authorization, and that the acts of both parties were such concerning the transaction as to estop either from questioning the binding force of it. Even if, as between the parties, it were possible to establish a liability by estoppel, none exists here. One who accepts a policy of insurance in a mutual insurance society organized under the provisions of chapter 14 of the Civil Code thereby becomes a member of the society, and must take notice of the terms of the contract to which he is a party. The statute under which the corporation is organized, the articles of incorporation, and the by-laws are made to contain the whole plan of insurance, its limitations, extent, and the obligations imposed. They embrace the terms of the contract. Whatever vitality the policy of insurance possesses is derived from these sources. The statute authorizing and controlling the organization and business of this society became as much a part of the contract for insurance and membership as if its terms were incorporated into the printed certificate, and every person becoming a member was bound to take notice of it. Niblack, Mut. Ben. Soc. 271, 272; Smith v. Sherman (Iowa) 85 N. W. 747; Davidson v. Society, 39 Minn. 303, 39 N. W. 803, 1 L. R. A. 482; Gent v. Ins. Co., 107 Ill. 652, 659; Simeral v. Ins. Co., 18 Iowa, 322; State v. Mfg., etc., Ins. Co. (Ohio) 33 N. E. 401, 24 L. R. A. 252; Insurance Co. v. Stoy, 41 Mich. 385, 1 N. W. 877, 21 Am. & Eng. Enc. L. 257. The law (section 3108, Rev. Codes 1899), a part of this

Digitized by Google

contract, required that the amount of cash premium accepted should be written in the policy; that the company should charge and collect upon its policies the full mutual premium in cash or in notes absolutely payable. None of these requirements made prerequisite to a valid insurance contract were observed in this case. The note given was payable only upon the contingency of a loss and assessment. The amount payable was left in uncertainty until the happening of events which were not certain to follow. The statute required that the total amount of the liability of a policy holder should be plainly and legibly stated upon the back of the policy, that the by-laws fix the contingent mutual liability of its members for the payment of losses and expenses not provided for by their cash funds, and that this contingent liability should not be less than a sum equal to and in addition to the cash premium written in the policy. These requirements were ignored. No cash fund could be obtained for the payment of expenses or losses under the form of contracts admitted until assessments could be made and collected. No valid consideration was given for the insurance contract. The policy of the law would be frustrated if this invasion of its mandate could be tolerated. This policy was and is void. Smith v. Sherman (Iowa) 85 N. W. 747; Gent v. Mfg. Ins. Co., 107 Ill. 652; Corey v. Sherman (Iowa) 64 N. W. 828, 32 L. R. A. 490, 514; Mut. Ins. Co. v. Barker, 107 Iowa, 143, 77 N. W. 868, 70 Am. St. Rep. 149; McNulta v. Bank (Ill.) 45 N. E. 954, 56 Am. St. Rep. 203; Gas Co. v. Sims (Cal.) 37 Pac. 1042, 43 Am. St. Rep. 105. The policy being void, the assessment cannot be enforced, and the note given was without consideration. Haverhill Ins. Co. v. Prescott, 42 N. H. 547, 80 Am. Dec. 123, 21 Am. & Eng. Enc. L. 258.

Appellant did not receive or retain any property of the corporation for which he was either morally or legally obligated to pay. He has nothing to restore. A contract of insurance entered into contrary to law or public policy is simply void, and neither party to it is estopped from showing the fact; otherwise the public law and policy would be at the mercy of individual interest and caprice. Bacon on Mut. Benefit Societies, § 424; Spare v. Home Mut. Ins. Co. (C. C.) 15 Fed. 707; In re Comstock, 6 Fed. Cas. 244 (No. 3,078) 3 Sawy. 218; Keen v. Coleman, 39 Pa. 299, 80 Am. Dec. 524; Wheeler v. Russell, 17 Mass. 258. Every member of this corporation was a party to these contracts, individually as the assured and collectively as the corporation. As parties to the contract with the corporation, they were severally in pari delicto. No estoppel operates either in favor of or against any of them, because there is nothing upon which it can be built. "An estoppel can never arise by implication alone, except from some conduct which induces action in reliance upon it to an extent that renders it a fraud to recede from what the party has been induced to expect. It is only enforced to prevent fraud." Security Ins. Co. v. Fay, 22 Mich. 468, 7 Am. Rep. 670. There cannot be an estoppel to show a violation of a statute, even to the prejudice of an innocent party. How much less can a corporation claim to bind a member to the payment of a void assessment on the theory of estoppel. To build up an estoppel against one situated as appellant is in this case and in favor of the corporation, would be to make the courts an instrument of oppression. In Bank of the United States v. Owens, 2 Pet. 538, 7 L. Ed. 512, the court held that a contract contrary to a clause in the act incorporating the bank which forbid it to take a greater interest than 6 per cent., but did not declare such contract void, was nevertheless illegal and void. In answer to the question whether such contracts are void in law upon general principles, the court say: "The answer would seem to be plain and obvious that no court of justice can, in its nature, be made the handmaid of iniquity. Courts are instituted to carry into effect the laws of a country. How can they, then, become auxiliary to the consummations of violation of law?" Harris v. Runnels, 12 How. 83, 13 L. Ed. 904.

Respondent relies upon section 2852, Rev. Codes. This statute is the expression of a rule long established to the effect that a defendant who has contracted with a corporation cannot collaterally question its powers in an action to recover on an obligation entered into with it; but the legality of the corporation or its powers to do a legal business is not here questioned. The objection here is to the want of power in the corporation, and not a defect in its organization. Uninfluenced by statute, the rule established by law as well as reason is that parties recognizing the existence of a corporation by dealing with it have no right to object to any irregularity in its organization, or any subsequent abuse of its powers not connected with such dealing. As long as these are overlooked or tolerated by the state, it is not for individuals to call them in question. Methodist Epis. Church v. Pickett, 19 N. Y. 485; Washburn Mill Co. v. Bartlett, 3 N. D. 138, 54 N. W. 544; McFarlan v. Triton Ins. Co., 4 Denio, 397; Swartwout v. Ry. Co., 24 Mich. 394. But where the objection is a want of power in the corporation, and not a defect in its organization, the case is different. In re Comstock, 6 Fed. Cas. 247 (No. 3,078), 3 Sawy. 218; Wheeler v. Russell, 17 Mass. 258; Russell v. De Grand, 15 Mass. 35. "The doctrine of estoppel in pais has never been carried so far as to prevent a party from showing that a corporation, even if it be one de jure, had not the power to do a particular thing, or that it was done in violation of a statute. * * * For instance, if a corporation was forbidden by statute to carry Indians on its boats, it could not make or enforce a contract for that purpose, and no one

would be estopped from alleging the fact in bar of an action by the corporation for the passage money. In Russell v. De Grand, 15 Mass. 37, it was held that a promissory note given for the premium on a policy of insurance on a vessel bound on a voyage prohibited by the laws of the United States was void, and the defendant, though a party to the agreement, was permitted to show its illegality to defeat a recovery upon it. * * * The reason of the rule is apparent and satisfactory. The maintenance of the public policy of a state, as manifested by its legislation, is of much more importance than the real or purposed equities of the parties to an illegal transaction, and therefore they are not estopped to show such illegality for the purpose of preventing the enforcement of a contract in opposition to such policy; otherwise the public law and policy would be at the mercy of individual interest and caprice. * * * To allow this corporation, by means of an alleged estoppel, which grows out of the very act prohibited, to indirectly do an act for which it had neither capacity nor right, would be practically to dispense with the limitation which the state has imposed upon its power of doing business." In re Comstock, 6 Fed. Cas. 248 (No. 3,078) 3 Sawy. 218.

This disposes of the respondent's contentions that defendant is estopped by his contract; that none but the state can question its validity, and that in a direct proceeding; and that the contract is not void as in conflict with the policy of the law, because not in express words in the statute so declared.

Our conclusion is that the judgment appealed from should be reversed. It is so ordered. Appellant will recover costs of justice and district courts and of this court. All concur.

STATE v. AMES.

(Supreme Court of Minnesota. July 10, 1903.)

GRAND JURY—CHALLENGES—TIME OF MAKING—BRIBERY — EVIDENCE — INSTRUCTIONS —GOOD CHARACTER—DEFENDANT AS WITNESS.

1. Challenges to individual grand jurors, based upon the ground of prejudice or bias, can be interposed only before the jury is sworn.

2. Such challenges cannot be made at the time of arraignment, by way of a plea in abatement or motion to quash the indictment, under section 7189, Gen. St. 1894. That section provides only for challenges or objections going to the regularity of the proceedings in the selection and formation of the jury.

3. Defendant was indicted for having, while acting as superintendent of the police department of the city of Minneapolis, received a bribe from one Mills, under an agreement to protect her in an unlawful occupation in said city. The evidence showed that Mills paid the money to one Cohen, who, the state claimed, was acting for defendant in receiving the same. It is *held*, taking the evidence altogether, that it is sufficient to justify the jury in finding that Cohen was acting for and in behalf of defendant; that the payment to him was equivalent to a payment to defendant personally.

4. Evidence of the commission of other crimes by defendant is competent if it tends corroboratively or directly to establish his guilt of the crime charged in the indictment on trial, or some essential ingredient thereof. Such evidence tends to establish guilt if it discloses a motive, a criminal intent, guilty knowledge, identifies defendant, or is part of a common scheme or plan embracing two or more crimes so related to each other that the proof of one tends to prove the other. Under this rule, it is *held* that evidence that other persons paid money to Cohen in consideration of official protection in an unlawful occupation, similar to that engaged in by witness Mills, was properly received. It tended (a) to connect Cohen and defendant as being jointly concerned in such unlawful transactions, and to show that defendant authorized Cohen to act for him in receiving the money; and (b) the evidence, taken as a whole, tended to show that the payments by the different persons were all made as a part of a common scheme or plan instigated and carried on by defendant and Cohen to solicit and receive such bribes. State v. Fitchette (Minn.) 92 N. W. 527, distinguished.

5. The court charged the jury generally to consider all the evidence before them, and particularly that certain evidence offered by defendant, tending to show his previous good character, was competent, as tending to show that he would not be likely to commit the crime charged against him. *Held*, that it was not necessary, in addition to these specific directions, for the court to go further, and specially say to the jury that they must consider the evidence of good character.

6. The court charged the jury that it was defendant's right and privilege to be sworn as a witness in his own behalf; that they "should consider his testimony, together with all the other testimony in the case, and give it such weight, as in your judgment, it should receive, bearing in mind, of course, the fact that he has a vital interest in the outcome of the case, and applying to his testimony the same rules of credibility that you apply to any other witness in the case." *Held* not error.

7. Other assignments of error examined, and *held* not well taken; and *held*, further, that the verdict is sustained by the evidence.

(Syllabus by the Court.)

Appeal from District Court, Hennepin County; Frank C. Brooks, Judge.

Frederick W. Ames was convicted of bribery, and from an order denying a new trial he appeals. Affirmed.

Welch, Hayne & Hubachek, for appellant. W. B. Douglas, Atty. Gen., F. H. Boardman, Co. Atty., C. S. Jelley, Asst. Co. Atty., and John W. Arctander, for the State.

BROWN, J. Defendant was tried and convicted in the district court of Hennepin county of the crime of receiving a bribe while acting in the capacity of superintendent of the police of the city of Minneapolis, and appealed from an order denying his motion for a new trial. A large number of assignments of error are reduced by counsel to 10 distinct propositions, and these will be taken up and disposed of in the order presented in appellant's brief. A statement of the facts will be made in connection with the appropriate question.

1. At the time defendant was arraigned

¶ 1. See Grand Jury, vol. 24, Cent. Dig. §§ 51, 53, 55.

Digitized by Google

and required to plead to the indictment, he interposed a motion to quash, annul, and set the same aside, and for leave to challenge and interpose objections to certain of the grand jurors, which motion was in all things denied, and of this ruling he complains. The motion presented questions relative to the qualification of individual members of the grand jury, and was based upon the claim (1) that every member of the grand jury was a prosecutor upon a charge against the defendant; (2) that a state of mind existed on the part of each juror with reference to the case and with reference to defendant which prevented him from acting impartially and without prejudice to the substantial rights of defendant. It was urged in support of the motion that the grand jury had, a short time prior to returning this particular indictment, found and returned into court another indictment charging defendant with having received a bribe, upon which indictment he was thereafter tried and duly acquitted. He also attempted to show in support of the motion that individual members of the grand jury had expended, of their personal and private funds, a large amount of money in the investigation of this and other charges of municipal corruption in the city of Minneapolis, and that one or more of the grand jurors personally expressed sentiments of hostility toward defendant. In support of these charges of prejudice and bias on the part of members of the grand jury, defendant asked leave of the court to interrogate said jurors in open court on the subject, but the request was denied. We find no error in the ruling of the court in respect to this motion. The objections thereby made to the grand jury were, in effect, challenges to the individual jurors for prejudice and bias, which could be interposed only before they were sworn. It is so provided by section 7188, Gen. St. 1894, and it is not important that defendant had not previously been bound over to await the action of the grand jury. It was held in State v. Davis, 22 Minn. 423, that the "right to challenge the panel of a grand jury, or any member thereof, is secured by statute only to persons held to await their action." And in Maher v. State, 3 Minn. 444 (Gil. 329), the court held that the fact that defendant was confined in jail when the jury was sworn did not give him the right subsequently to challenge them. Section 7189, under which counsel claimed the right to interpose the challenge in the case at bar, does not apply. That section refers exclusively to challenges to the array or panel, and not to individual jurors; and though a challenge to the array, in the form of a plea in abatement or motion to quash the indictment, may be interposed thereunder after the return of an indictment, within the decision in State v. Russell, 69 Minn. 502, 72 N. W. 832, only questions relative to the regularity of the proceedings in the selection and formation of the jury can be urged under it. This is the common-law rule, and there was no intention on the part of the Legislature to change it. At common law, challenges going only to the prejudice or bias of individual jurors were required to be made before they were sworn; State v. Rickey, 10 N. J. Law, 83; People v. Jewett, 3 Wend. 314; State v. Hamlin, 47 Conn. 95, 36 Am. Rep. 54; 1 Bishop, Crim. Proc. 882, 883. And such has always been the practice in this state, so far as we are advised. State v. Russell, supra, though perhaps in conflict with State v. Davis, supra—the latter holding that both challenges to the array and to individual members must be made before the jury is sworn—does not sustain defendant to the extent claimed. The objections there entertained, after the jury had been sworn, involved the proceedings leading up to its formation, and not the qualifications, as to prejudice or bias, of the jurors. The decision in the case of State v. Osborne, 61 Iowa, 330, 16 N. W. 201, appears to have been based upon the provisions of the statutes of that state, and is not in point.

2. Defendant was superintendent of the police department of the city of Minneapolis, and the indictment charges him with having received a bribe from one Addie Mills on the 4th of February, 1902, of the sum of $15, upon the understanding and agreement that he would, as such superintendent of police, protect said Mills from arrest or punishment for keeping a house of ill fame in said city, in which occupation she was then engaged; it being then and there the duty of defendant, as such official, to cause the arrest of said Mills, or any other person engaged in such an unlawful occupation. To establish the truth of this charge, the state introduced evidence tending to show that witness Mills, the person named in the indictment, on the 5th of February, 1902, paid to one Joseph Cohen the sum of $15, pursuant to an arrangement previously made with defendant, and for the purpose of securing protection in her occupation; that Cohen represented defendant, and was authorized by him to receive the money. Witness Mills testified to the payment to Cohen, and related certain conversations with him concerning it, and defendant complains of the ruling permitting her to do so. It is insisted on the part of defendant that no foundation was laid for the introduction of her testimony; that there was no sufficient showing of connection or confederacy between Cohen and defendant, or that defendant ever authorized Cohen, directly or indirectly, to collect or receive the money from her. This presents one of the principal features of the case, and it is necessary to its proper understanding to make a brief outline or statement of the facts relied upon by the state to establish the contention that Cohen was the representative of defendant, and authorized to receive for him the money from witness Mills.

As already stated, defendant was superin-

Digitized by Google

tendent of the police department of the city of Minneapolis, charged with the powers and duties usually possessed by such an officer—to maintain the law, preserve order, and direct his subordinates in that behalf. In January, 1902, together with two police officers of the city (Brackett and Wirtensohn, members of his department and subject to his direction), defendant made a tour of the city for the purpose of locating houses of the character of that operated by witness Mills—ostensibly candy stores, but in fact conducted for immoral purposes in violation of the laws of the state; the business of candy vending being a mere cover to hide the real character of the place. To each one of the proprietors of such places defendant stated that he had been informed that they had been paying money to one Gardner, then a police officer, but not under the direction of defendant, for certain purposes; and he directed them to stop it, and make no further payments to any person until he should advise them. He directed them to call at his office in the course of a week or two, at which time he would be prepared to inform them what they would be expected to do in respect to future payments. This statement was made to witness Mills, and, pursuant to his directions, she called at the office of defendant within a short time thereafter, when she was informed by him that he had not yet decided what to do, but that as soon as he came to a decision he would communicate the fact to her; and she testified at that time he agreed to "protect her all he could." He ordered all the women visited at the time stated to call at his office for directions in respect to future payments of money, with which order they complied, when they were told, as witness Mills was, that he had not yet determined what they should do, but would communicate with them later. Testimony was then introduced tending to show that, soon after the women so called upon him, defendant ordered Officer Wirtensohn, one of the officers who had previously accompanied him, to go with said Cohen to the various houses so previously visited, which order Wirtensohn complied with. He called at each place with Cohen, and the latter, who had a list of the places, informed the women that he represented defendant, and that they would be required to make payments of money for protection to him at his jewelry store, and directed them how the payments were to be made—by inclosing the money in an envelope marked only with a number, which Cohen at the time gave each. The evidence shows that thereafter the women, including witness Mills, made monthly payments to Cohen of various amounts, under the arrangement made with defendant that they should be protected in their unlawful occupation.

There is no direct evidence connecting defendant with Cohen—no evidence that defendant ever had any conversation with him in reference to collecting money from these persons. That defendant authorized him to do so can be gathered only from the circumstances shown in evidence—the trip by defendant to the various places with Officers Wirtensohn and Brackett; the statement of defendant that he would in the near future inform the women what further orders he would expect them to comply with in respect to the payment of money; the fact that he soon thereafter directed Wirtensohn to accompany Cohen to the various places; that Cohen had a list of the places; and that he subsequently collected and received from them various sums of money. This evidence was sufficient to warrant the jury in finding that the officers named, including defendant and Cohen, conspired and confederated together to commit the unlawful acts complained of, and that defendant authorized and directed Cohen to receive the money for him. It tended to show a conspiracy or confederacy, and the declarations and statements of each were competent evidence against defendant, whether made in his presence or not. Circumstantial evidence is as legal and competent in criminal as in civil actions, and the inferences to be drawn from the facts we have stated all point with unerring certainty to the conclusion that Cohen was the representative of defendant in the receipt of this money, and was a co-conspirator in the whole infamous transaction. There was therefore no error in the ruling of the court permitting the witness Mills to testify that she paid Cohen the sum of $15 at about the time charged in the indictment, nor any error in permitting testimony as to the declarations and statements made by him concerning the same, or when previously directing her when and where to make it. State v. Palmer, 79 Minn. 428, 82 N. W. 685; People v. McKane, 143 N. Y. 455, 38 N. E. 950; State v. Gardner (Minn.) 92 N. W. 529; State v. Winner, 17 Kan. 298.

It is also contended, in connection with the testimony of witness Mills, that it was error to permit her to testify to the conclusion that the money was paid for protection. There was no error in the ruling of the court on this subject. It appeared from her testimony that defendant had agreed to protect her in consideration of such payment. It was also shown that she was not indebted to Cohen in any way, or to any person connected with the city administration. The objection to the question for what purpose she paid the money was properly overruled. Ganser v. Insurance Co., 38 Minn. 74, 35 N. W. 584. At any rate, it in no way prejudiced defendant. Her answer was not conclusive, and the question was submitted to the jury to determine from all the evidence before them.

3. The state was permitted to prove, over the objection and exception of defendant, payments of money to Cohen by the other women referred to, and to relate conversations had with him in reference thereto. It

Digitized by Google

is claimed by defendant that this testimony tended solely to prove the commission of other separate, independent offenses, and was incompetent and inadmissible. The decision in State v. Fitchette (Minn.) 92 N. W. 527, is relied upon as sustaining the position. The question as to the admissibility of evidence of this character has been before the courts often, and the rule permitting its introduction is variously stated by judges; but, reduced to its narrowest compass, the true rule is that evidence of the commission of other crimes is admissible when it tends corroboratively or directly to establish the defendant's guilt of the crime charged in the indictment on trial, or some essential ingredient of such offense. As stated by Chief Justice Parker in People v. Molineaux, 168 N. Y. 264, 61 N. E. 286: "Does the evidence of the other crime fairly aid in establishing the commission by defendant of the crime for which he is being tried? And that test, and none other, is fairly established by the authorities." What was said in the general discussion of the subject in the Fitchette Case was not with a view of laying down any hard and fast rule in such cases. As applied to the facts there before the court, the decision in that case is in accord with the authorities generally, and we adhere to it. It is in line with other cases in this court. In State v. Madigan, 57 Minn. 425, 59 N. W. 490, the court said: "If the evidence offered tends to prove the commission of the crime charged in the indictment, it is not incompetent because it also tends to prove the commission by the accused of another crime." See, also, State v. Hayward, 62 Minn. 474, 65 N. W. 63; State v. Wilson, 72 Minn. 522, 75 N. W. 715; State v. Bourne, 86 Minn. 426, 90 N. W. 1108; State v. Gardner (Minn.) 92 N. W. 529. The evidence of the commission of some other crime directly tends to show the guilt of defendant of the crime charged when it discloses a motive, a criminal intent, guilty knowledge, the absence of mistake, identifies the defendant, or is a part of a common scheme or plan embracing two or more crimes so related to each other that the proof of one tends to establish the other. The Fitchette Case is distinguishable in at least two respects: (1) It was necessary for the state to establish a connection between Cohen and defendant in respect to payments of money by the women, and to show that Cohen was authorized by the latter to collect and receive the same for him. That it tends to show a confederacy between the officers and Cohen is clear, and, that fact being established, it was competent for the state to show the declarations, statements, and acts of any one of the conspirators. Defendant directed Officer Wirtensohn to accompany Cohen to the various houses in question, and Cohen, on meeting each woman, informed her that he had been sent by defendant, with directions to notify them to make all further payments of protection money to him, instead of to Gardner, as they had theretofore been doing. The evidence tended to corroborate, confirm, and establish the contention of the state that Cohen represented defendant in the receipt of the money, and comes fairly within the general rule above stated. No such issue or question was presented in the Fitchette Case. In that case the money was paid direct to Fitchette. (2) It is also distinguishable from the Fitchette Case in that it tended to establish a scheme or system of crimes, intimately associated and connected, so that proof of the other payments was corroborative, and tended directly to the truth of the charge made in the indictment. The evidence leaves no room for reasonable doubt on this subject. It established beyond question a scheme concocted by defendant to put the abandoned women of Minneapolis under tribute to him in return for his official protection, and each and every payment was a part of the one scheme. It was practically one transaction—each act, each payment, an essential part of the whole plan of corruption—and the evidence was competent. Swan v. Comm., 104 Pa. 218; Mason v. State, 42 Ala. 532; People v. Gray, 66 Cal. 271, 5 Pac. 240; People v. Cobler, 108 Cal. 538, 41 Pac. 401; Mayer v. People, 80 N. Y. 364; People v. Peckens, 153 N. Y. 576, 47 N. E. 883; State v. Eastwood, 73 Vt. 205, 50 Atl. 1077. There was no attempt to establish a scheme or plan in the Fitchette Case.

4. It is contended that the court erred in refusing to give certain requests of defendant in respect to evidence relating to his good character. We have examined these requests, together with the general charge of the court on the subject, and conclude that their refusal was not error, for the subject was fully and sufficiently covered by the general charge. The court instructed the jury that evidence of defendant's reputation for honesty, integrity, and truthfulness was competent, as tending to show that he would not be likely to commit the crime charged against him, and that if the jury believed from the evidence that defendant had previously borne a good reputation for honesty, integrity, and truthfulness among his acquaintances and neighbors, that fact was proper to be considered by them, in connection with all the other evidence in the case, in determining the question of his guilt or innocence. It was not necessary for the court to go further, and say to the jury that they must consider such evidence. The court had previously charged them that they were the exclusive judges of the facts and of the credibility of the several witnesses, and that it was their duty to consider all the evidence bearing upon the questions at issue. It is well settled, both on principle and authority, that the court should not single out and give undue prominence to particular items of evidence, and instruct the jury that they might or might not create in their minds a reasonable doubt as to the guilt of defendant. Such instructions would be

Digitized by Google

argumentative in character and improper. 11 Am. & Eng. Ency. Pl. & Prac. 185. Its full duty is performed when the general rules of law applicable to the issues are given to the jury, and they are charged to consider all evidence in the case.

5. Defendant was sworn as a witness in his own behalf, and gave testimony in support of his plea of not guilty. The court instructed the jury, in connection with the charge, that they should consider all the evidence; that they should not ignore the testimony of defendant merely because he had a vital interest in the outcome of the case. It is urged that this was reversible error. It is the province and right of the court to instruct the jury in any action, civil or criminal, that they should take into consideration, in weighing the testimony of the several witnesses, the interest each is shown to have in the result of the action, their appearance and demeanor while on the stand, and all facts and circumstances tending to their credit or discredit; but the court must not charge as to the credibility of particular witnesses. State v. Hoy, 83 Minn. 286, 86 N. W. 98; Harriott v. Holmes, 77 Minn. 245, 79 N. W. 1003. We think the rule was followed, and not violated, by the charge of the court in the case at bar. In the case of State v. Lucy, 41 Minn. 60, 42 N. W. 697, the court, speaking on this subject, said: "The defendant availed himself of a statutory privilege, and gave to the jury his version of the unfortunate encounter. In referring to this fact, the court charged that such weight should be given to his testimony as the jury believed it entitled to, in view of all the facts and circumstances proved on the trial, and that the defendant's interest in the result of the prosecution might also be considered. This is unquestionably the law applicable to the testimony of all witnesses, in civil or criminal cases, who have any interest whatsoever in the result of the litigation, and consequently there was no error in this portion of the charge." In the case of State v. Borgstrom, 69 Minn. 508, 72 N. W. 799, 975, the trial court instructed the jury that they should take into consideration the interest which the defendant, as a witness, had in the result of the litigation, and the instruction was held not error. In the case at bar, counsel, in discussing the issues before the jury, had, no doubt, referred to the interest defendant had in the result of the prosecution; and the court, with that in mind, and thoughtful of the rights of defendant, instructed them that they should not fail to consider his testimony merely because he was vitally interested in the result. There was no intention to reflect upon defendant, or to suggest in the remotest degree just what weight the jury should give his testimony. The court intended only to remind the jury that they should not, because he was interested, ignore his testimony. They were explicitly directed to apply to him the same rules of credibility as they applied to other witnesses.

6. Upon the question whether Cohen was authorized by defendant to collect and receive the money from the women referred to, the trial court instructed the jury as follows: "It is the law generally that any act of an assumed agent, and a recognition of his authority by the alleged principal, may, in a proper case, prove the agency to do other similar acts. And if you find in this case that Cohen was authorized or directed by defendant to collect in his behalf money from one or more of these women, other than Addie Mills, such fact is proper to be considered in determining whether or not defendant authorized Cohen to collect money from her. Indeed, if you find that Cohen had general authority to collect protection money from abandoned women, or from a certain class of them, which included Addie Mills, then you would be justified in finding that in receiving money from Addie Mills, if in fact he received it, he received the same for the defendant, and in that event will find that he himself received the money." It is urged that this instruction was error, for which a new trial should be granted; that it, in effect, stated to the jury that the authority of Cohen might be established in the same manner that the fact of agency is established in ordinary civil actions. We do not concur in this contention. It was clearly not the intention of the court so to instruct the jury. Speaking generally, the court said, "It is the law that any act of an assumed agent, and a recognition of his authority by the alleged principal, may, in a proper case, prove the agency to do other similar acts." Then follows the definite and specific statement that if the jury shall find that Cohen was authorized or directed by defendant to collect in his behalf from any one or more of the women, other than Addie Mills, such fact would be proper to be considered by them in determining whether or not defendant authorized Cohen to collect from her. This was far from instructing the jury that defendant could be charged with a criminal act on the principle of acquiescence in the acts of an assumed agent, nor could the jury have so understood. They were expressly told that it must appear that defendant authorized and directed Cohen to collect and receive the money, in order to fix upon him responsibility therefor. No exception was taken at the trial, and it comes clearly within the rule of Steinbauer v. Stone, 85 Minn. 274, 88 N. W. 754. If counsel were apprehensive that the jury would be misled by it, as they now insist, the attention of the court should have been called to the matter at the time. But it is inconceivable that the jury could have been misled by this instruction, and defendant was in no way prejudiced by it. The case of People v. McLaughlin (N. Y.) 44 N. E. 1017, is not in point.

A number of other objections to the charge

Digitized by Google

of the court are assigned as error by appellant, which we have very patiently considered, and reach the conclusion that no reversible error is presented by any of them. Taken as a whole, the charge of the learned trial court was as clear and comprehensive as a charge could possibly have been made. Every issue was carefully alluded to, in clear and explicit terms, and with great fairness the learned trial judge instructed the jury upon every legal phase of the case. It covered in a general way every request made by defendant, and presented the issues so clearly to the jury that it would seem impossible that they did not understand fully every issue before them.

7. It is urged that the verdict of the jury is not sustained by the evidence. We have examined the evidence thoroughly, and have no misgivings on the subject of its sufficiency to justify the conviction of defendant. We need not review it in detail in this opinion. The main features have been stated in connection with the question as to the admissibility of some of the evidence, and it is unnecessary to refer to it again. We can say only that it presents a case of the clearest and most palpable sort of corruption, and a willful and flagrant violation of official duty. The evidence is so clear and persuasive, and so fully justifies the verdict, that it would be nothing less than usurpation of power in us to disturb it.

We have considered all the assignments of error made by defendant, not specially referred to, and find no error justifying a new trial; and the result is that the order appealed from is affirmed.

MEYERS v. MARKHAM.

(Supreme Court of Minnesota. July 10, 1903.)

VENDOR AND PURCHASER — CONTRACT OF SALE—CANCELLATION—ACCEPTANCE OF DEED.

1. Contract for the sale of real property construed, and cause remanded to the court below, with directions to modify its conclusions of law, and award the relief referred to in the opinion.

2. McNamara v. Pengilly, 67 N. W. 661, 64 Minn. 543, to the effect that a vendee in a contract for the sale of land is not bound to accept a deed from any person other than his vendor, distinguished, and the rule there laid down *held* not to apply to a contract for a quitclaim deed.

(Syllabus by the Court.)

Appeal from District Court, Pine County; F. M. Crosby, Judge.

Action by Simon Meyers against James D. Markham. Judgment for defendant, and plaintiff appeals. Reversed.

Wm. H. Donahue, for appellant. P. H. Stollberg, S. G. L. Roberts, and J. D. Markham, for respondent.

BROWN, J. Action to cancel certain contracts for the sale of 680 acres of land in Pine county, and to remove the record thereof, as clouds upon plaintiff's title. Defendant had a judgment in the court below, and plaintiff appealed therefrom.

The short facts are as follows: In July, 1895, one Ogren was the owner of the land in controversy, or of some interest therein, and entered into an agreement with the firm of Kelsey & Markham, whereby, for the consideration of $300, he agreed to deliver to that firm deeds from all persons having claims against the property, with certain exceptions, and convey to them all his title to the property. The contract was subsequently assigned to defendant in this action, who caused the same to be recorded in the office of the register of deeds. Thereafter, on May 3, 1900, defendant and Ogren entered into another agreement, to supersede and take the place of the one just referred to, which recites the fact that both parties have certain interests in and to the real estate in question, which is therein described, and that there are certain defects in the record title to the same, which they desire to have remedied; that Ogren was anxious to sell and transfer his interest in the premises to defendant, and the latter agreed to purchase the same, and pay him therefor the sum of $350, Ogren to execute and deliver to defendant a quitclaim deed of all his right, title, and interest therein. The contract further provides that defendant will, "with all convenient speed," commence and prosecute to final judgment an action for the purpose of quieting title to the premises, and pay or cause to be paid all the necessary costs and expenses incident to the prosecution of the same. It provides, also, that Ogren shall during the pendency of the action aid and assist defendant in its prosecution, attend the trial as a witness, and turn over to defendant all deeds which he then had in his possession, or which might thereafter come into his possession, relating to the title to the land, and furnish the services of an attorney to aid defendant in the prosecution of said action. Subsequent to entering into this contract, on November 23, 1900, Ogren duly executed and delivered to plaintiff a quitclaim deed of the premises, thereby transferring to him all Ogren's title thereto. Defendant was informed of this transfer some time after it was made. The trial court found, in addition to what we have stated generally as the facts, that neither party ever performed, or offered to perform, the contract last referred to. The court further found that, about a month after defendant learned of the quitclaim deed from Ogren to plaintiff, he tendered to Ogren the sum of $350 in payment for the land—the same being the amount fixed by the contract—and demanded a deed from him, which was not given; Ogren having previously conveyed to plaintiff. The court also found that, notwithstanding notice of the conveyance to plaintiff, defendant refused to recognize him as having any rights in the

Digitized by Google

premises, and refused to deal with him concerning the property in any manner whatever. The question presented for decision is whether plaintiff is entitled to any relief. With the unimportant question relative to the commencement of the action to quiet title to the land referred to in the contract out of the way, we think the rights of the parties are reasonably free from doubt.

Plaintiff acquired title to the premises with notice of the contract between Ogren and defendant, which was made to supersede and take the place of the prior contract made between Kelsey & Markham and Ogren, subject to all the rights thereby conferred upon defendant, and was bound to perform the terms of the same as fully as Ogren would have been required to do, had he retained the title. We need not stop to consider whether Ogren could assign the contract. Its execution did not disable him from selling and transferring his title to the land to another. Such sale and transfer would be, however, as just stated, subject to whatever rights the contract created in defendant. The trial court having found that neither party performed the terms of the contract, it is important to inquire whose duty it was to act first—which party was required to take the initiative step toward a performance or carrying out of the contract. It is urged by respondent that Ogren was to act first; that he was, by the terms of the writing, to furnish an attorney to prosecute the action to be brought by defendant to quiet title to the land; and that he failed to do so. We are unable to concur in this construction of the contract. It required defendant to commence the action "with all convenient speed." Ogren was to furnish an attorney to assist in its prosecution, but the terms of the agreement do not justify the contention that he was to provide an attorney to commence it. Fairly construed, the contract required Ogren only to furnish the services of an attorney to aid in the conduct of the suit after it had been brought, and he was not required to move in that direction until informed of the commencement of the action by defendant. So it appears that defendant was first in default, if default in the terms of the agreement for the commencement of the action may be said to be of any importance whatever, for he never commenced it. But this provision of the contract does not seem to us of controlling force in determining the issues of the case. Defendant was the purchaser of the land, and it was to his interest alone that the title to the same be perfect. The action agreed to be brought to quiet title would in no way result beneficially to Ogren. It was not to be brought, except in part performance of the contract, and was of interest only to defendant. Ogren was to receive $350 for his interest in the land, and that, too, whether the action to quiet title was successful or not. It must therefore be held that the terms of the contract in this respect, being exclusively for defendant's benefit, could be waived by him. If he desired to bring the action as provided by the terms of the agreement, it was his option so to elect. He did not commence it, but, on the contrary, without doing so, tendered payment of the purchase price of the land to Ogren, and demanded the quitclaim deed he had by the terms of the contract agreed to execute. The reasonable and fair inference from this is that he intended to waive the provisions of the contract in this respect. Unless this be so, it is within his power to retain his contract, cloud the title by its record, and no relief whatever can be granted plaintiff. This would be inequitable and unjust, and prevent plaintiff from the enjoyment of his legal rights.

On the merits, we are impressed with the view that there is very little for controversy between the parties, and that the litigation, for the benefit of both, should be brought to an end. The conceded facts in the record are such as to justify the suggestion that no further litigation is necessary. Plaintiff is the owner of the land at this time, but his title is subject to defendant's rights under the agreement with Ogren. Having waived the provisions in reference to the commencement of the action to quiet title, defendant may still insist that plaintiff deliver to him all deeds and instruments of title possessed by Ogren, and, by paying the contract price of the land to plaintiff, demand a quitclaim deed from him. The point made that defendant is not bound to accept such a deed from plaintiff, because and for the reason that his contract calls for one from Ogren, is not sound. The agreement provided for a quitclaim deed from Ogren, and, as Ogren conveyed to plaintiff, by quitclaim deed, whatever title he held, a similar deed from plaintiff would be just as effective as, and answer every purpose of, a deed from Ogren. The case of McNamara v. Pengilly, 64 Minn. 543, 67 N. W. 661, is not in point, because in that case the effect of the contract was to require the execution of a deed containing the usual covenants.

Plaintiff should be required, upon payment of the purchase price, to convey to defendant such title to the premises as he obtained from Ogren, and cause to be conveyed to defendant any title subsequently acquired by Ogren, and also deliver to him, or to the clerk of the court for his use, all deeds, certificates, and evidence of title affecting the property possessed by Ogren, and which the terms of the agreement required the latter to deliver to defendant. A reasonable time should be allowed both parties to comply with the conditions. If defendant does not tender payment of the purchase price within the time fixed by the court below, plaintiff should have judgment as prayed for.

The judgment appealed from is reversed,

Digitized by Google

and the cause remanded, with directions to the court below to amend its conclusions of law, and order judgment in accordance with the views herein expressed. It is so ordered.

On Rehearing.

(July 23, 1903.)

PER CURIAM. An application for a reargument herein having been duly made and considered, it is ordered that it be, and is hereby, granted upon the question whether, by reason of the fact that the plaintiff gave the defendant notice to perform the contract, referred to in the complaint, as provided by Laws 1897, p. 431, c. 223, and the defendant's failure so to do, the plaintiff is not entitled to judgment canceling the contract, and excluding the defendant from any interest in the land therein described, subject to whatever rights the defendant may have, if any, against any party, for damages for a breach of the contract; the argument to be on briefs; the appellant to serve and file his within 30 days from this date, and the respondent within 30 days thereafter.

BOALES et al. v. FERGUSON.

(Supreme Court of Nebraska. Dec. 4, 1901.)

ERROR—JURISDICTION—APPEAL FROM COUNTY COURT.

1. Judgments of the district court rendered on appeal from the probate side of the county court are reviewable only by petition in error.
2. This court cannot acquire jurisdiction to review such a judgment on appeal by consent of the parties.

Commissioners' Opinion. Department No. 2. Appeal from District Court, Saline County; Hastings, Judge.

"Not to be officially reported."

Action by Lavina A. Boales and others against E. J. Ferguson, administrator. Judgment for defendant, and plaintiffs appeal. Dismissed.

Thos. Ryan and J. W. Deweese, for appellants. J. D. Pope, for appellee.

POUND, C. This is an appeal from a judgment of the district court rendered on an appeal from the county court in the settlement of an estate. It is manifest that we cannot review the judgment by appeal. Orders and judgments of the county court in its probate jurisdiction are reviewable in this court only by petition in error. Whalen v. Kitchen (Neb.) 85 N. W. 278.

Appellant has urged that the appellees have waived this objection by not raising it in their briefs, nor until the court called attention thereto at the hearing. Consent, however, cannot give jurisdiction over the subject-matter. The court has no power to review the judgment in the absence of a petition in error filed in the time fixed by law.

We recommend that the appeal be dismissed.

OLDHAM and SEDGWICK, CC., concur.

Dismissed.

PEOPLE'S BUILDING, LOAN & SAVINGS ASS'N v. PICKARD et al.

(Supreme Court of Nebraska. Dec. 4, 1901.)

USURY—DEFENSE TO MORTGAGE DEBT.

1. The defense of usury is of no avail to the purchaser of the equity of redemption who has assumed and agreed to pay the mortgage debt.

Commissioners' Opinion. Department No. 3. Error to District Court, Adams County; Beall, Judge.

"Not to be officially reported."

Action by the People's Building, Loan & Savings Association against Libbie J. Pickard and others. Judgment for defendants, and plaintiff brings error. Reversed.

A. H. Bowen, for plaintiff in error. Smith & Olmstead, for defendants in error.

DUFFIE, C. This action was brought against John H. Walker and wife to foreclose a mortgage given by Libbie J. Pickard and Lorenzo F. Pickard to the plaintiff October 2, 1890, to secure the payment of $400 and interest at the rate of 10 per cent. per annum. The Pickards, previous to the commencement of the action, had sold and conveyed the mortgaged premises to the defendant Walker, who, as a part consideration of the purchase price, assumed and agreed to pay the mortgage debt. While the Pickards were made parties to the action, they were not served with summons, and no relief was asked against them. Walker alone made answer. The answer of Walker, while alleging payment of the mortgage, is clearly a plea of usury, and advantage is sought to be taken by him of what might, perhaps, be a usurious contract as between the original parties thereto. The district court found that the mortgage had been paid in full, and gave a decree canceling the same.

We think the case is governed by the Building & Loan Ass'n of Dakota v. William H. Walker et al., 59 Neb. 456, 81 N. W. 308, and Building & Loan Ass'n of Dakota v. Lewis B. Bilan, 59 Neb. 458, 81 N. W. 308, and, following these cases, we recommend that the decree be reversed, and the case remanded to the district court, with direction to ascertain the amount due upon the mortgage according to its terms, and enter a decree of foreclosure for said amount.

ALBERT and AMES, CC., concur.

Reversed, with directions.

¶ 2. See Appeal and Error, vol. 2, Cent. Dig. § 88.

Digitized by Google

SCHULZ et al. v. MODISETT et al.

(Supreme Court of Nebraska. Dec. 4, 1901.)

EVIDENCE—HYPOTHETICAL QUESTIONS—ACTION ON NOTE.

1. All the undisputed pertinent facts of a case should be substantially included in hypothetical questions propounded to expert witnesses.
2. Evidence examined, and *held* sufficient to sustain the judgment.

Commissioners' Opinion. Department No. 2. Error to District Court, Douglas County; Keysor, Judge.

"Not to be officially reported."

Action by A. M. Modisett and others against James Schulz and others. Judgment for plaintiffs, and defendants bring error. Affirmed.

Good & Good, for plaintiffs in error. George E. Pritchett, for defendants in erorr.

OLDHAM, C. This is a suit against the maker and indorser on a promissory note for the balance due thereon of $3,338.05. Defendants admitted the execution of the note, but alleged as a defense that the note was given as a part of the purchase price of 545 head of cattle bought from the plaintiff below by the defendants below, James and Hans Schultz, through the agency of the defendants Rice Bros. & Nixon; that the cattle were purchased at the agreed price of $3.15 per hundredweight, after allowing 3 per cent. for shrinkage. They were weighed on the scales of plaintiff below, and when so weighed a part of the purchase price was paid in cash, and a note of $9,914 was given for the remainder of the purchase price. This is the note in controversy. They also allege that the scales on which the cattle were weighed were inaccurate and incorrect in the weight, and instead of the net weight of the cattle, after deducting 3 per cent. shrinkage, being 703,745 pounds, as shown by plaintiff's scales, the true net weight of said cattle was not to exceed 600,000; that they had not discovered the alleged fraud practiced upon them by the plaintiff until a part of the purchase price had been paid and the note for the remainder sued on had been executed and delivered to plaintiff. Plaintiff replied, denying these allegations of the answer. Trial was had to a jury. There was judgment for the plaintiff for the full amount due on the note, and defendants bring error to this court.

There is no complaint made of any instruction given or refused by the trial court. The only complaint to which our attention is directed is as to the forms of questions propounded by counsel for the plaintiff in the examination of his witnesses. But an examination of the very voluminous record in this cause shows that these criticisms are purely technical, and without any substantial merit.

It is also contended that there was no proper foundation laid for the expert testimony introduced by plaintiff tending to show the probable loss in the weight of the cattle in their shipment from Irvin to Wahoo. It is claimed that the hypothetical questions propounded to the witnesses did not contain a fair statement of the facts in regard to the cattle and their transportation as shown by the testimony of the preceding witnesses. It is true that all the undisputed pertinent facts of a case must be included in hypothetical questions. Levinson v. Sands, 81 Ill. App. 578. This is just what was done. But defendant contends that everything which he claimed to be connected with that shipment should have been included in plaintiff's hypothetical questions. This is not the rule. He had a right to and did examine his own experts on his theory of the facts connected with that shipment, but he could not compel plaintiff to submit his theory of facts, which were not admitted by plaintiff to plaintiff's experts.

There was no dispute in the trial below that the note was given for a balance of the purchase price for 545 head of cattle. It was admitted that these cattle were weighed in the presence of defendants' agent on plaintiff's scales, and that these scales showed that the cattle weighed 725,510 pounds, and that, after deducting 3 per cent. for shrinkage, there were 703,745 pounds, which were to be paid for at the agreed price of $3.15 per hundredweight, which amounted to $22,167.96. It is also admitted that $12,253.96 of this amount was paid in cash, and that $9,914 was paid by note, and that $7,000 had been paid on this note by the defendants about six months after the purchase of the cattle. It also appeared that there was no objection made by the defendants to the weight of the cattle at the time this payment was made.

The character of the testimony by which the defendants sought to impeach the accuracy of the plaintiff's scales was of a very dubious and unsatisfactory kind. It consisted largely of the judgment of cattle men, who looked at the cattle after they had been shipped from Irvin, in Sheridan county, to Wahoo, in Saunders county, Neb., as to the weight of the cattle. There was no testimony of any expert who had tested the scales that they were inaccurate, nor were the cattle weighed again on any other scales until they had been fattened, and shipped to the markets in South Omaha and Chicago. Under this condition of the testimony we can scarcely see how the jury could have found other than it did on the issues submitted.

It is therefore recommended that the judgment of the district court be affirmed.

POUND and SEDGWICK, CC., concur.

Affirmed.

¶ 1. See Evidence, vol. 20, Cent. Dig. § 2370.

Digitized by Google

HILL et al. v. PITT.

(Supreme Court of Nebraska. Dec. 4, 1901.)

PUBLIC LANDS—TIMBER CLAIM—RIGHTS OF PRE-EMPTOR—DIRECTING VERDICT.

1. A person entitled by law to pre-empt a tract of land, or to hold it under the timber culture act, and who is recognized by the register and receiver of a United States land office, and is by them allowed to make a filing on a tract of the public land within their district legally open to pre-emption, takes the same and all permanent improvements thereon, if any, together with the exclusive right of possession thereof free from the claims of all persons except the United States. Hiatt v. Brooks, 22 N. W. 73, 17 Neb. 33, followed.

2. When the evidence which has been offered is not sufficient in law to make out the case of the party who has offered it, it is the duty of the court to so instruct the jury. Hiatt v. Brooks, 22 N. W. 73, 17 Neb. 31, followed.

Commissioners' Opinion. Department No. 2. Error to District Court, Lincoln County; Grimes, Judge.

"Not to be officially reported."

Action by Guy Pitt against Charles I. Hill and others. Judgment for plaintiff, and defendants bring error. Affirmed.

French & Baldwin and Wilcox & Holligan, for plaintiffs in error. Neville & Parsons, for defendant in error.

OLDHAM, C. This was an action for damages for trespass on real estate, originally instituted before a justice of the peace, and taken by appeal to the district court of Lincoln county, Neb. The amount sued for was $175. The cause was tried to a jury, and verdict was rendered in plaintiff's favor for $40. Judgment was rendered on the verdict, and defendant brings error to this court.

There is only one question necessary to review under the pleadings and admissions in the record, and that is, had plaintiff any right to maintain the action? Defendant admits that plaintiff had made a homestead entry on the land in dispute before the alleged injury was committed. He also admits that he (defendant) took the lumber from the house, and the window casings from the windows, and the curbing from the well, and the poles from the stable after plaintiff had made his filing on the land. He claims he had a right to do this, because, as alleged in his answer, he had purchased all the lumber from a former entryman. The lumber taken had all been used in the building and roofing of the house and stable and in the curbing of the well, and none of it was loose lumber unconnected with the realty. Defendant's contention is that the title to the land was in the United States, and that, as he tore this lumber from the buildings before plaintiff got actual possession under his homestead filing, plaintiff has no title on which he can maintain this cause of action. In the case of Hiatt v. Brooks, 17 Neb. 33, 22 N. W. 73, the question involved in this case was determined against defendant's theory. Cobb, J., in rendering the opinion, says: "I understand it to be the law that when a pre-emptor on the public domain abandons his pre-emption and leaves buildings or other permanent improvements thereon, he abandons such improvements. It may be, considerations of natural justice would lead to the conclusion that a person who puts permanent valuable improvements on a tract of government land in an unsuccessful effort to hold it by virtue of the pre-emption or homestead laws should be allowed to take such improvements away at the end of unsuccessful litigation. But such a rule would be difficult of execution, of doubtful general utility, and never has been applied to cases of this kind." In that case, as in the case at bar, the trial court refused to submit defendant's contention to the jury at all, and the court said: "When the evidence which has been offered is not sufficient in law to make out the case of the party who has offered it, it is the duty of the court to so instruct the jury."

The only other question to be determined is as to whether the trial court submitted the correct measure of damage to the jury, for this is the only question that it did submit. The trial court said: "The measure of plaintiff's damage is the difference between the value of the property injured just before its injury and the value of the property remaining after the injury." We think this a proper measure of damage, and, as the jury only returned damages in the sum of $40, we do not think the defendant was in any way prejudiced in the measure of damage.

There are some complaints made of the action of the trial court in its rulings on the admission and exclusion of testimony, but there is nothing in the record that shows any error in this regard to the prejudice of the defendant.

We therefore recommend that the judgment of the district court be affirmed.

POUND and SEDGWICK, CC., concur.

Affirmed.

FISHER et al. v. BUCHANAN.

(Supreme Court of Nebraska. Dec. 4, 1901.)

SPECIFIC PERFORMANCE—CONTRACT—SUFFICIENCY—PETITION.

1. Petition examined, and *held*, that the facts therein stated are insufficient to constitute a cause of action.

2. Where, by the terms of a contract, the conditions to be performed by the respective parties are concurrent, the plaintiff in an action for specific performance must allege and prove performance, or a tender of performance of the conditions on his part to be performed, or such facts as will show that such tender would have been unavailing.

Commissioners' Opinion. Department No. 3. Error to District Court, Douglas County; Fawcett, Judge.

"Not to be officially reported."

Action by Alexander Buchanan against Henry Fisher and others. Judgment for

Digitized by Google

plaintiff, and defendants bring error. Reversed.

J. J. O'Connor and Smyth & Smith, for plaintiffs in error. John T. Cather, for defendant in error.

ALBERT, C. This action was brought by Alexander Buchanan against H. A. Fisher and Thomas Simanek to enforce specific performance of an alleged contract for the sale of real estate. The trial court found for the plaintiff, and decreed accordingly. The defendants bring the case here on error.

The first ground urged for a reversal of the decree of the trial court is that the petition does not state facts sufficient to constitute a cause of action. The petition, so far as is material at this time, is as follows:

"That on the 25th day of May, 1897, the said H. A. Fisher was the owner in fee simple of the following described real estate, to wit, lots seven and eight in block ninety, South Omaha, as surveyed, platted, and recorded, all in the county of Douglas and state of Nebraska; and on said 25th day of May, the plaintiff and the defendant H. A. Fisher entered into a written agreement whereby the said Fisher sold said lots to the plaintiff for and in consideration of the sum of four hundred dollars ($400) for his equity and all interests which said Fisher had in said lots over and above a certain mortgage in the sum of seven thousand dollars ($7,000); and it was agreed by and between the parties that in consideration of the sum of four hundred dollars ($400) the said Fisher was to convey said lots to the plaintiff by a good and sufficient warranty deed; a copy of which written agreement is hereto attached, marked 'Exhibit A,' and made a part of this petition; said sum of money to be paid by the plaintiff to the said H. A. Fisher upon his making to the plaintiff a good and sufficient warranty deed for said premises; the plaintiff to assume and pay said mortgage of $7,000, which was to be in full consideration for said lots.

"Second. On the 26th day of May, 1897, in pursuance of said written agreement, whereby the said H. A. Fisher did sell and convey said lots to the plaintiff, the plaintiff paid to the said H. A. Fisher the sum of one hundred ($100) as part payment on said contract for said lots, and the said H. A. Fisher received the said one hundred dollars, and gave the plaintiff his written receipt therefor; a copy of which is attached to this petition, marked 'Exhibit B,' and made a part thereof.

"Third. On the 24th and 25th days of June, A. D. 1897, according to the terms of said written contract, the plaintiff duly tendered to the said H. A. Fisher the sum of three hundred dollars, the balance of said sum of four hundred dollars, and requested the said Fisher to convey the said premises to the plaintiff, as provided by said written agreement, by a good and sufficient warranty deed; but the said H. A. Fisher refused and still refuses to execute and deliver such conveyance.

"Fourth. The plaintiff has duly performed all the conditions of said agreement on his part, and is ready and willing to pay said purchase money, and now brings the sum of three hundred dollars, the balance of the purchase money, into court, and offers the same to the said H. A. Fisher, upon his executing and delivering to the plaintiff a good and sufficient conveyance of said premises according to the terms of said contract."

Exhibit A referred to in the petition is as follows:

"South Omaha, May 25, 1897.

"This is to certify that I, H. A. Fisher, of Wahoo, Neb., have this day sold my equity to A. Buchanan, of Omaha, in lots 7 & 8, block 90, So. Omaha, for four hundred dollars, and said money to be paid on transfer of equity. H. A. Fisher.

"A. Buchanan."

It will be seen, from a study of the petition, that the defendant relies on a written contract, and that Exhibit A is the contract upon which he relies. That document contains no mutual promises nor agreements, and does not fall within any recognized definition of the term "contract." It is not a contract. Darr v. Mummert, 57 Neb. 378, 77 N. W. 767. The most that can be said for it is that it is a memorandum of a contract. But this action is based, not on any contract of which this document might be the memorandum, but on the alleged written contract Exhibit A. As we have seen, that document is not a contract; consequently, it will not support this action. Darr v. Mummert, supra.

There is another reason why the decree of the district court must be reversed. The trial court appears to have treated Exhibit A as a memorandum of the contract, and, on the proof submitted, found that one of the conditions of the contract between the plaintiff and the defendant Fisher was that the plaintiff was to assume the mortgage upon said lots in the sum of $7,000, and to pay the same. There is no evidence whatever that the plaintiff ever performed or offered to perform this condition, nor of any facts that would excuse his failure in this regard in an action of this kind. That such omission is fatal is elementary.

It is therefore recommended that the decree of the district court be reversed, and the cause remanded for further proceedings according to law.

AMES and DUFFIE, CC., concur.

Reversed and remanded.

Digitized by Google

RUSSELL v. GUNN.

(Supreme Court of Nebraska. Dec. 4, 1901.)

TRIAL—INSTRUCTIONS.

1. An instruction which substantially withdraws an issue in the case is erroneous.

Commissioners' Opinion. Department No. 1. Error to District Court, Red Willow County; Norris, Judge.

"Not to be officially reported."

Action by John A. Gunn against Jennie C. Russell. Judgment for plaintiff, and defendant brings error. Reversed.

Harlan W. Keyes and Doyle & Berge, for plaintiff in error. W. R. Starr, for defendant in error.

DAY, C. John A. Gunn brought this action in the district court of Red Willow county against Jennie C. Russell to recover for medical services rendered by him pursuant to an alleged employment by the defendant. Upon the trial there was a verdict for the plaintiff, upon which judgment was rendered, to review which the defendant has brought error to this court. The petition was in the usual form of an action to recover for services rendered under a contract of employment. The answer charged three defenses: (1) A qualified general denial; (2) pleading of the statute of frauds; and (3) a plea of coverture.

One of the errors now complained of is that the court, in its instructions to the jury, failed to state the issues as presented by the pleadings and the evidence, in that the court wholly failed to mention the second and third defenses alleged in the answer. The only reference to the issues in the instructions appears in instruction No. 1 given by the court, which was as follows: "This is an action brought by the plaintiff against the defendant for professional services. Upon most of the points in the case there is practically no dispute in the evidence. Under the evidence there can be no question but what the plaintiff received the telegram that has been testified about in evidence; that, acting in good faith, and upon the strength of such telegram, he performed the services for which the action is brought; and that the reasonable value of such services is what is claimed in this action. About the only thing for you to consider is whether or not the defendant authorized Dr. Demay to send for Dr. Gunn. If you find from the evidence that the defendant authorized or instructed Dr. Demay to send the telegram in question, then your verdict should be for the plaintiff. If you find from the evidence that the defendant did not authorize or instruct Dr. Demay to send for Dr. Gunn, then your verdict should be for the defendant." As to the defense of the statute of frauds, we think the court might with propriety have regarded it as a mere surplusage. The action was clearly based upon an allegation of employment by the defendant. The fact that service was rendered for the benefit of some one else would make it none the less the contract of the parties. The court instructed the jury that, if the defendant did not authorize or instruct the employment of the plaintiff, there could be no recovery. This instruction sufficiently covered the phase of the case presented by the statute of frauds, and was as favorable to the defendant as she could ask.

The answer and the evidence also raised the defense of coverture, and this, we think, should have been submitted to the jury. The instructions of the court were too restrictive, in that they ignored one of the fundamental issues presented by the answer. Under the issues it was not sufficient, in order to find for the plaintiff, that the jury should be satisfied that the defendant employed the plaintiff to perform the service. They should have been instructed further that, defendant being a married woman, to bind herself by contract, it must appear that the contract was entered into upon the faith and credit of her separate property and estate. The effect of the instruction given was to withdraw from the consideration of the jury an issue involved in the case. This was error. Galloway v. Hicks, 26 Neb. 531, 42 N. W. 709.

The defendant requested an instruction upon this phase of the case, which, we think, was applicable to the issues, and should have been given. In substance it charged that, if the jury found that defendant made the contract alleged in the petition, then (she being a married woman) the jury should inquire whether she made such contract with reference to her separate property and business, or intended to bind her separate property for the payment thereof, and unless, from the evidence, the jury believed that the defendant made the contract of employment, and that in making the same she made it with reference to her separate property and business, and intended to bind her separate property for the payment thereof, the defendant would not be liable. In this state the disability of a married woman to make a valid contract remains the same as at common law, except in so far as the disability has been removed by the statute. Aultman v. Obermeyer, 6 Neb. 260. The statute has removed the common-law disability of a married woman to make contracts only in cases where the contract made has reference to her separate property, trade or business, or was made upon the faith and credit thereof, and with intent on her part to bind her separate property. Godfrey v. Megahan, 38 Neb. 748, 57 N. W. 284.

We therefore recommend that the judgment be reversed, and the cause remanded for further proceedings.

HASTINGS and KIRKPATRICK, CC., concur.

Reversed and remanded.

Digitized by Google

McCORD, BRADY CO. et al. v. TESSIER et al.

(Supreme Court of Nebraska. Oct. 1, 1901.)

HOMESTEAD—ABANDONMENT.

1. Evidence examined, and *held* to show an abandonment of a homestead.

Commissioners' Opinion. Department No. 3. Appeal from District Court, Clay County; Hastings, Judge.

"Not to be officially reported."

Action by the McCord, Brady Company and others against Katherine Tessier and others. Judgment for defendants, and plaintiffs appeal. Reversed.

McCabe, McGilton & Rath and Carl Herring, for appellants. E. E. Hairgrove, Thos. H. Matters, and J. B. Cessna, for appellees.

DUFFIE, C. This is a creditors' bill to subject the N. E. quarter (¼) of section twenty-one (21), T. seven (7), R. five (5), in Clay county, Neb., to the payment of judgments held by the appellants against the defendant M. Tessier, who conveyed the property to his wife December 6, 1896. All of the judgments were entered in the district court of Clay county between the months of January and July, 1897, but the debts all antedating the conveyance to his wife. The defense was the homestead character of the premises, and this defense was sustained by the district court, and judgment in favor of the defendants.

There is a finding in the decree that no consideration was paid by Mrs. Tessier for the conveyance made to her by her husband, and the sole question for our consideration is, was the land in question the homestead of M. Tessier at the date of the conveyance to his wife, and exempt from the payment of the judgments against him held by the plaintiff? The defendant, being called in his own behalf, testified that he moved on the land in March, 1878; that he purchased it in 1879; that he moved to the town of Sutton in 1890; that his principal object in leaving the farm was to educate his children, there being no school nearer than 2¾ miles of the farm. He moved all his household effects to Sutton, but he thinks that for the first two years there was some stock left on the farm. At the time of leaving the farm he had a sale, but did not sell all his property. He further testified on cross-examination that he went to Sutton for the purpose of engaging in the cooper business; that he bought a lot, on which he built a cooper shop, and followed the cooper business for about 3½ years; that he quit the business because he could not sell any more butter tubs. When he left the farm he "did not know what his intention was; was going to do some cooper work in Sutton, but did not know how long it would stand." After quitting the cooper business, he was in the swing business for six or seven months, trading the cooper property for a swing. He then engaged in the grocery business in Sutton, which he continued for three years in partnership with his son, mortgaging the farm to get money to buy the business. Being asked if he did not intend to continue the grocery business as long as it would pay, he answered: "I don't know but what I would have stayed in it as long as I could make a living, and as long as I could get along. I did not know how long. I was in a rented building, and did not know how long I would stay." After quitting the grocery business in Sutton, he stated in reply to a question: "We went to Dakota. I did not know whether it was to be permanent or not. I did not know how we would make it, or like the country." After the failure of his business in Dakota, he returned to Sutton and in October, 1898, he circulated a petition for appointment as postmaster of Sutton. He also voted in Sutton at the general elections held in the years 1894, 1895, 1896, and 1897. About a month prior to the trial of the case, April 7, 1898, he moved back to the farm with a part of his family, although the farm is still rented.

Against all these facts showing an abandonment of the homestead we have only the evidence of the defendant and his wife as to their intention to return to the farm and to preserve it as their home. We are willing to concede that the homestead character of the premises being once shown, the burden is on those who seek to subject it to the payment of a debt, to show that it has been abandoned as a homestead, and is no longer protected from execution; but, if the evidence contained in the record before us is not sufficient for that purpose, it is difficult to conceive what evidence less than an actual sale of the premises would be sufficient to warrant such a conclusion.

We recommend that the decree of the district court be reversed, and a decree entered in this court subjecting the premises described in the petition to the payment of the judgments of the plaintiffs, and for costs.

ALBERT and AMES, CC., concur.

Judgment accordingly.

SULLIVAN, J., absent, not voting.

TOOTLE, LEMON & CO. v. WILLY et al.

(Supreme Court of Nebraska. Oct. 1, 1901.)

MORTGAGE FORECLOSURE—SALE—VACATING—APPRAISAL.

1. A sale of real estate ordered in a decree of foreclosure will not be set aside on the sole ground that no copy of the decree accompanied an order of sale issued by the clerk to the sheriff. Neither will such sale be disturbed because the value of the premises, as returned by the appraisers, is less than the value fixed by parties whose affidavits are offered to impeach the appraisement.

Commissioners' Opinion. Department No. 3. Appeal from District Court, Thayer County; Hastings, Judge.

"Not to be officially reported."

Digitized by Google

Action by Tootle, Lemon & Co. against Jacob A. Willy and others. Judgment for plaintiffs, and Willy appeals. Affirmed.

M. H. Weiss, Frank Irvine, and Robt. Ryan, for appellant. Richards & Dinsmore, for appellees.

DUFFIE, C. This is an appeal from an order confirming a sale made under a decree of foreclosure. The principal objection urged is that the sheriff acted under an order of sale issued by the clerk, instead of under the decree entered by the court, and incidentally it is urged that the appraisement was too low, and not made upon actual view by the appraisers. An examination of the record satisfies us that no reversible error is made to appear. The order of sale issued in this case, and the sale made thereunder, appear to conform strictly to the decree entered, and the fact that no copy of the decree accompanied the order of sale is not in our opinion fatal. Burkett v. Clark, 46 Neb. 466, 64 N. W. 1113. Many affidavits as to the value of the land were filed by the appellants in support of a motion to set aside the appraisement. The fair value of the land, as shown by these affidavits, was about $3,600, while the appraisers fixed the value at $3,100. The appraisement so made was not so disproportionate to the value shown by the affidavits as to entitle us to interfere. It is not affirmatively made to appear that the appraisers did not view and examine the premises.

We recommend that the order appealed from be affirmed.

AMES and ALBERT, CC., concur.

Affirmed.

SULLIVAN, J., absent., not voting.

GRAY et al. v. EURICH.

(Supreme Court of Nebraska. Dec. 18, 1901.)

MORTGAGE FORECLOSURE—OBJECTIONS TO CONFIRMATION.

1. Objections to confirmation of a sale except for fraud will not be considered where they go to the appraisement only, and were not raised before sale.

2. An order confirming a sale will not be reversed for technical irregularities which could not have been prejudicial to substantial rights of any of the parties.

Commissioners' Opinion. Department No. 2. Appeal from District Court, Thayer County; Hastings, Judge.

"Not to be officially reported."

Action by David S. Gray and others against William Eurich. Judgment for plaintiffs, and defendant appeals. Affirmed.

M. H. Weiss and Frank Irvine, for appellant. Richards & Dinsmore, for appellees.

POUND, C. The principal objection to the sale proceedings appealed from in this case is not available on appeal for the reason that it goes to the appraisement, and was not raised before sale. An ingenious argument has been presented, but it seems clear enough that the alleged failure to appraise the interest of all the defendants having an estate in the lands cannot be distinguished from the many other defects in appraisements to which the rule that they must be pointed out by objections thereto before sale has been applied. Another objection raises the same question as that considered and passed on adversely to the contention of appellants in Tootle, Lemon & Co. v. Willy (not yet officially reported) 96 N. W. 342, decided October 1, 1901, and requires no further comment.

Some irregularities in the notice of sale are also complained of. Thus the notice recites that the land has been "levied" upon under a "judgment" rendered before a judge named. Counsel contend that the words "levy" and "judgment" indicate an execution sale, and that the naming of the judge indicates an order made at chambers. But the notice also recites that the "levy" mentioned was made "by virtue of an order of sale." Under our Code, "judgment" is the apt word in proceedings of an equitable nature as well as in those which are strictly legal. The recital of an order of sale must have corrected any misapprehension to which the word "levy" might have given rise, and, as the judgment was rendered "before" the judge named, not "by" him, as if he had acted at chambers, we fail to perceive how any prejudice could have resulted from the form of the notice. It must be admitted that the form used is not to be recommended, and that more care in drawing it would not have been amiss. But an order confirming a sale will not be reversed for technical irregularities which could not have been prejudicial to substantial rights of any of the parties.

We recommend that the order appealed from be affirmed.

OLDHAM and SEDGWICK, CC., concur.

Affirmed.

GRAY et al. v. NAIMAN et al.

(Supreme Court of Nebraska. Dec. 18, 1901.)

MORTGAGE FORECLOSURE—OBJECTIONS TO CONFIRMATION.

1. Objections to confirmation of a sale will not be considered except for fraud where they go to the appraisement only, and were not raised before sale. Gray v. Eurich (No. 10,702, filed Dec. 18, 1901) supra, followed.

2. An order confirming a sale will not be reversed for technical irregularities which could not have been prejudicial to substantial rights of any of the parties. Gray v. Eurich, supra, followed.

Commissioners' Opinion. Department No. 2. Appeal from District Court, Thayer County; Hastings, Judge.

¶ 1. See Mortgages, vol. 35, Cent. Dig. § 1504.

¶ 1. See Mortgages, vol. 35, Cent. Dig. § 1504.

Digitized by Google

"Not to be officially reported."

Action by David S. Gray and others against John Naiman, Jr., and others. Judgment for plaintiffs, and defendants appeal. Affirmed.

M. H. Weiss and Frank Irvine, for appellants. Richards & Dinsmore, for appellees.

OLDHAM, C. This is an appeal from a confirmation of a judicial sale. The identical objections urged against the regularity of the sale are determined in the case of Gray v. Eurich (No. 10,702, decided December 18, 1901) 96 N. W. 343, a copy of the opinion therein being attached hereto and made a part hereof; and for the reasons set forth in that opinion we recommend that the order appealed from be affirmed.

POUND and SEDGWICK, CC., concur.

Affirmed.

MERRILL v. VAN CAMP et al.

(Supreme Court of Nebraska. July 10, 1901.)

TAXATION—SALE CERTIFICATE—FORECLOSURE OF LIEN.

1. Designation in sale certificate as "balance of south part (27.04 acres) of tax lot 31," where the owner admits paying taxes by that description for several years, and that from it he knew the property, *held* sufficient under section 142, art. 1, c. 77, Comp. St. 1901, to create a lien as against him.

2. Both pleadings and decree showing a tax sale and a certificate issued, *held* sufficient to establish prima facie existence of a lien in some amount, since no objection is raised to sale or taxes on which it is based, except indefiniteness of description and failure to sell for all taxes delinquent.

Commissioners' Opinion. Department No. 1. Appeal from District Court, Douglas County; Scott, Judge.

"Not to be officially reported."

Action by H. A. Merrill against Charles L. Van Camp and others. Judgment for defendants, and plaintiff appeals. Reversed.

H. W. Pennock, for appellant. Hall & McCulloch, for appellees.

HASTINGS, C. June 1, 1896, plaintiff filed his petition in the district court of Douglas county to foreclose a tax lien, alleging that September 15, 1893, he purchased the south 27.04 acres of tax lot 31, in section 34, township 15, range 13, for county taxes for the year 1891, and paid the amount of those taxes for that year, $114.05; that the treasurer then executed and delivered to plaintiff sale certificate No. 9,688, a copy of which is set out. The certificate recites the sale of "balance of south part (27.04 acres) of tax lot 31," section as above. The petition further alleges payment October 2, 1893, of county taxes for 1890, $113.60, and for the year 1899 of $173.32, and payment November 4, 1893, of city taxes for 1890, $350.24, city taxes for 1892, $239.95, and special assessment, grading of Thirteenth street and Vinton street to city limits, $363.90; that the real estate was subject to these taxes and special assessment, and that they were duly levied and assessed, were delinquent at time of payment, and were a first lien; that there had been no redemption; that Van Camp is the owner, and Agnes C. is his wife; and defendant Zabriski claims a judgment lien, alleges service of notice of expiration of time to redeem. Charles L. and Agnes C. Van Camp answer that Charles L. owns a part of tax lot 31, and defendants have no knowledge as to whether plaintiff paid taxes on defendant's land; that the description in the petition is not sufficient to identify any property, is fatal to the validity of an assessment, and there was no valid assessment; that they have no knowledge as to the payment of taxes set out in paragraph 2 of plaintiff's petition, and therefore deny them; that there was no valid sale, because the property was sold for 1891 taxes only, and those of 1890 and 1892 were then delinquent, but not included; deny every allegation not previously admitted, and ask to be dismissed, with costs.

For reply plaintiff says that tax lot 31 was an irregular tract, whose greatest length was from northwest to southeast, and contained 57.31 acres; that, after it was surveyed and platted, Charles L. Van Camp conveyed by deed various portions of it, two of which were laid out into additions; that by the end of 1891 ten parcels had been sold off, two of which were designated as "additions," the other eight as "sublots"; that at the time of the assessment of 1891 the balance of tax lot 31 consisted of a northern part of irregular shape, containing 3.18 acres, and a south part, also irregular in shape, containing 27.04 acres, the two separated by intervening parcels conveyed away; that at the time of such assessment Charles L. Van Camp was owner of said south part, 27.04 acres, but was not the owner of the north part, consisting of 3.8 acres, which was wholly separated and distinct from the south part; that from 1885 to 1890 defendant Van Camp had paid taxes upon this property under the same or similar descriptions as in the sale certificate and petition, and that said descriptions were certain and definite in connection with the surveys and plats in the office of the county surveyor, and well understood by the defendants, and said description, by reference to said maps and surveys can be located with certainty. The reply admits that other taxes were delinquent, and not included in the sale certificate.

June 16, 1897, trial was had, and the following decree was entered: "This case came on to be heard upon the petition, answer, reply, and evidence, and was submitted to the court, upon consideration whereof the court finds that the description in the certificate of tax sale is uncertain, indefinite, and insufficient, and such that cannot be aided by other evidence, and made to apply to the property described in the petition, and

Digitized by Google

against which it is attempted to be enforced; and upon all the issues joined the court finds for the defendants. It is therefore considered by the court that said action be, and the same hereby is, dismissed." From this decree plaintiff appealed.

An examination of the bill of exceptions shows the admission in evidence of lot record No. 3, relating to tax lot 31, and sublots to the number of 10 formed from it. The record then shows the tender of a plat, which was objected to as incompetent, immaterial, and irrelevant, and an attempt to show by outside records a description of the property pretended to have been sold. This objection was sustained, and also one to any attempt to identify the plat offered. This was done on the express ground that the description set out in the petition is indefinite and ambiguous, and therefore any attempt to connect this description with definite premises was immaterial and irrelevant. The assessment book for the year 1891, referring expressly to tax lot 31 "of section 34, 15—13, and taking in all the description of tax lot 31 and its subdivisions," was also rejected as incompetent and irrelevant for the same reasons. Defendant Van Camp was examined as a witness, and testified to owning tax lot 31, and to having conveyed sublots 1 to 9, and that he owned a portion indicated on the plat as 27.04 acres. The tax certificate and tax receipts set forth in the petition were tendered by plaintiff and objected to by defendant as immaterial and irrelevant "for the reason that they show an indefinite description," which was sustained. Notice of expiration of time to redeem and proof of service were admitted without objection. Receipt for 1892 taxes of the city of Omaha was rejected because of "indefinite description." Defendant Van Camp was then permitted to testify, over objection on his own behalf, to payment of taxes for 1886, 1887, 1888, 1892, and 1893 on this land under similar descriptions, and that he "knew it by this description." The decree is, in substance, a dismissal for indefiniteness of the petition. It expressly finds that a sale certificate was issued, for it finds its description of premises insufficient. While most of the evidence was excluded because of the court's view that the description was too bad to be helped, it would seem that there is sufficient in the admission of defendant that he had paid taxes for years upon this property under substantially the same description, and that he knew it by this description, to show that it was capable of identification under the description contained in the certificate of sale. Chapter 77, art. 1, § 142, Comp. St. 1901. The allegations of the answer must be construed as an admission of the issuance of the sale certificate, whose indefiniteness is complained of. The decree itself finds the existence of a sale certificate, and so prima facie a sale and the regularity of prior proceedings. Chapter 77, art. 1, § 116, Comp. St. 1901.

It is urged that the general denial in the answer, together with the exclusion of all the evidence tendered by plaintiff, except as before stated, makes a record upon which the decree of the court must be sustained as against an appeal. It is true that the court finds upon all the issues for the defendants, and it is true that all evidence going to establish either tax sale or payment of taxes was rejected. It is also true that this court has repeatedly held that one who takes an appeal announces himself as satisfied with the record as made. If the issue here had been as to the existence of the sale certificate, its total rejection, together with all the evidence of payment of taxes subsequent and the general finding for defendants, would have compelled plaintiff to resort to proceedings in error in order to obtain a review of the case. Whatever may be thought of the doctrine laid down in Ainsworth v. Taylor, 53 Neb. 484, 73 N. W. 927, Phœnix, etc., Ins. Co. v. Brown, 37 Neb. 705, 56 N. W. 488, Alling v. Nelson, 55 Neb. 161, 75 N. W. 581, and National Life Ins. Co. v. Martin, 57 Neb. 350, 77 N. W. 769, and elsewhere, the cases seem to firmly establish the proposition, so far as this court is concerned, that one who takes an appeal declares himself content with the record. In this case, however, the denial is only of matter not before admitted, and we have an allegation "that, whether the land purchased by plaintiff as claimed by his petition was or was not properly described, there was no valid sale of such land, in this: As shown in plaintiff's petition, whatever land was sold or attempted to be sold by said county treasurer was sold for the county taxes of the year 1891 only. On the 15th day of September there were taxes due and delinquent, etc., none of which said taxes were included in the amount for which said land was sold." This is a distinct admission not only of a sale, but also of a purchase "as claimed." With the denial merely of matter not before admitted, and plaintiff's admission that all delinquent taxes were not included in the sale, it left, as the only issue as to this sale, the sufficiency of the description and the identity of the premises described with defendant's land. The evidence of the defendant himself shows that under the circumstances the description of his land was certain enough to enable him to recognize it. The statute makes any description sufficient which will enable treasurer, tax collector, or other person interested to determine what property is intended. Chapter 77, art. 1, § 142. "The office of a description is not to identify lands, but to provide the means for their identification; and it is sufficient when this is done." Abbott v. Coates (decided at present term, not yet officially reported) 86 N. W. 1058. Plaintiff's petition sets out in full the certificate of sale, and is as definite, therefore, as the certificate itself. Ordinarily, a designation of land merely as "south part of lot 31" would indicate nothing; but, if

Digitized by Google

there was a definite "balance of south part" known by that name—as defendant's admissions. together with the pleadings, clearly indicate—it would comply with the statute. There having been a sale for presumably valid taxes, and the description being good against this owner, to whom it was definite. there must be something due plaintiff, and the case should be remanded to ascertain how much.

It is therefore recommended that this case be reversed, and remanded for further proceedings in accordance with this opinion.

DAY and KIRKPATRICK, CC., concur.

Reversed and remanded.

CUSHING v. SCHOENEMAN et al.

(Supreme Court of Nebraska. July 10, 1901.)

JOINDER OF CAUSES—DEED—CONSTRUCTIVE NOTICE—LIMITATIONS—LACHES.

1. Proceedings to set aside a former decree relating to the same matter and a suit to foreclose the mortgage involved may be prosecuted in one action.

2. Constructive notice of a deed is not constructive notice of a finding and decree, which is not referred to nor mentioned in the deed, and the recording of such deed does not set in motion the statute of limitations as against an action to set aside such findings and decree.

3. Laches cannot be predicated of one whose delay is occasioned by constant assurances of his resident agent that legal proceedings would be useless, and by frequent promises that payment will be procured without such proceedings.

Commissioners' Opinion. Department No. 1. Appeal from District Court, Lancaster County; Holmes, Judge.

"Not to be officially reported."

Action by Quincy F. Cushing against Alvine E. Schoeneman and others. Judgment for plaintiff, and defendants John Brunken and others appeal. Affirmed.

S. B. & Roscoe Pound, for appellants. George E. Hibner, for appellee.

HASTINGS, C. Plaintiff, on April 9, 1896, filed his petition, setting forth the giving of a note and mortgage for $1,000 by Schoeneman and wife in March, 1886, to himself. The note matured January 1, 1891. In the same petition plaintiff asks that a decree rendered in his favor on this note and mortgage in the district court, May 14, 1889, for $1,330.77, be set aside and annulled on the ground that it was wholly unknown to and unauthorized by the plaintiff, and asks a foreclosure and sale for the amount claimed to be due upon his note and mortgage. Mrs. E. L. T. Vaughan intervened, and claimed a lien upon the premises embraced in plaintiff's mortgage by virtue of a $900 mortgage executed by John Brunken and wife. John Brunken answered, admitting the execution and delivery of plaintiff's note and mortgage and the execution of Vaughan's note and mortgage, but setting out the institutio March 2, 1889, of a suit by Carlos C. to foreclose two other mortgages ag Schoeneman and wife upon the same p ises, an appearance in that action for plaintiff by leave of court, and the filin his behalf, by attorneys, of an answer cross-bill, and the rendition of a decree closing a first lien on the premises in f of plaintiff upon the same note and mort sued on here; that a sale was had u that decree, and on August 5, 1889, a she deed of the premises in question exec and delivered to Carlos C. Burr; that J ary 19, 1891, Burr and wife sold the p ises to Brunken, who had been in posse ever since, claiming ownership; that p tiff was during all the times mention resident of the state of New York, and gaged in loaning money in Nebraska, that Carlos C. Burr was his sole and e sive agent, transacted all of his business, exercised his own discretion in making l and in taking security therefor on beha plaintiff; that he was accustomed to send tices to plaintiff's debtors of their notes coupons, frequently collected the same fore they were due, and was the ge agent of plaintiff, and his acts as such firmed and ratified. Brunken's answer alleges that Burr employed the attorney appear in the previous action, and had thority so to do; that the proceedings in action were regular, and that the dee Burr conveyed to him the whole title to premises, and was a complete satisfacti plaintiff's mortgage; that Burr's deed recorded on January 20, 1891, in Book Deed Records of Lancaster county, on 73; that all of the proceedings were witl plaintiff's knowledge and had been ra and confirmed by him by the acceptan $300 from Burr, and the retention of same with full knowledge of Burr's act Brunken's answer also claims laches in mitting the decree of foreclosure and sa stand from the time of its rendition, Ma 1889, to the institution of this action on 9, 1896; that defendant Brunken had valuable improvements upon said premis good faith, relying on his title, and that had become insolvent, and totally unab respond to the covenants in his dee Brunken. The interest payment due J ary 1, 1891, was made by Carlos C. Bu December 18th of that year. The $30 question was paid upon the mortgage by at the first National Bank in November, where the mortgage had been sent for c tion, and Burr at that time agreed to kee the interest payments. From a decree ting aside the decree of May 14, 1889, s as it related to plaintiff, and foreclosing p tiff's mortgage, and directing a sale o premises, the defendant John Brunken peals.

The court below found that the action en by Burr in procuring attorneys to ap

for Cushing and set up his lien in Burr's foreclosure action of 1889 was entirely unauthorized, and found that the plaintiff, Cushing, had no knowledge of any such proceedings, and did not learn of them until shortly before the commencement of this action in 1896. Counsel for the appellants does not claim that there is evidence of actual knowledge on the part of Cushing of these proceedings, or of direct authority from him for Burr's action. It is claimed only that the general position of Burr with relation to this loan and other loans made by the plaintiff in the state of Nebraska was sufficient warrant for appellants' accepting his authority to represent Cushing. A somewhat careful examination of the record finds no reason to disturb the conclusions of the trial court in regard to this matter. While it does appear that Burr was employed to both loan and collect for Cushing, no transactions indicating any authority on Burr's part to employ attorneys, or to put in motion legal proceedings for the collection of this debt, or, indeed, of any other, is shown. It is one thing to be authorized to loan money and to receive payments on such loans, and quite another to employ attorneys and institute legal proceedings. The fact that Burr was an agent for the one class of purposes furnishes no presumption at all that he had authority in respect to the other. It quite conclusively appears that during the years 1893, 1894, and 1895 plaintiff was, and still remained, in entire ignorance that an attempt had been made to foreclose his mortgage, and that his agent, Burr, had attempted to acquire title by this means to the property in question. The note and mortgage which are the basis of his claim remained during all of that time in plaintiff's possession, except during a few weeks, when they were forwarded to him by the First National Bank at Lincoln, and were recalled by him at Mr. Burr's request, and upon the latter's promise to procure their payment. Probably this fact is not conclusive, but it is certainly a strong circumstance, and sufficient to overcome the evidence tending to show authority on the part of Carlos C. Burr. It is contended by appellant that, where an appearance has been made for a party by a regularly admitted attorney, the rule is that the judgment is prima facie good, and is not subject to collateral attack. Numerous authorities to this position are cited, and we are not disposed to question the doctrine. In this case, however, all of the parties interested in the upholding of the judgment are present. The petition of the plaintiff directly assails the judgment and asks for its annulment, and we do not think this can be denominated a collateral attack upon the judgment in question.

Some objection is urged to the form of the final decree—that it does not in express terms set aside the decree of 1889. The decree, so far as it deals with that of the former foreclosure, is as follows: "The court further finds that the defendant Carlos C. Burr had no authority to appear for the plaintiff herein, or act as his agent in the premises, in the foreclosure proceedings in this court, wherein Carlos C. Burr was plaintiff and Alvine E. Scheoenmann et al. were defendants; that all proceedings had and done in the foreclosure of the mortgage set forth in the petition herein were without authority, and were void." The first clause in the decree following this finding is as follows: "It is therefore considered and adjudged by the court that all proceedings had and done in the foreclosure of the mortgage set forth in the petition herein and herein described in the case in the district court of Lancaster county, Nebraska, bearing general number 6,013, appearance docket T, page 65, wherein Carlos C. Burr was plaintiff and Alvine E. Schoenemann et al. were defendants, be, and the same hereby are, decreed to be void, and of no force or effect." This would seem to be a sufficiently direct attack upon the decree rendered in the first action. It remains only to consider the claim that this action is barred by the statute of limitations, or by the laches of the plaintiff. It is true that the first decree was taken in 1889, and it is true, also, that the sheriff's deed to Carlos C. Burr, obtained under that decree, was filed for record in the office of the county clerk of Lancaster county on August 24, 1889, and has remained of record ever since. On the authority of Gillispie v. Cooper, 36 Neb. 775, 55 N. W. 302, it is contended that this was constructive notice of the rights claimed by Burr and his grantees, and sufficient to set the statute of limitations in motion as against plaintiff's proceedings to set aside this judgment. Without stopping to consider whether or not the plaintiff's real cause of action is his mortgage and the setting aside of the first decree—a mere incident of its foreclosure, the right to which would remain as long as an action was maintainable on his mortgage—it seems clear that constructive notice of the sheriff's deed would not be constructive notice of the decree. An examination of the deed shows that it nowhere refers to the plaintiff, Cushing, or to the mortgage held by him; nowhere indicates in any way that plaintiff purported to be a party to those proceedings; and does not contain any reference which would lead the plaintiff, or any one else, to imagine that the title therein conveyed was anything but subject to plaintiff's rights. As above suggested, the deed might be constructive notice of its own contents and recitals, but cannot be held to be constructive notice of anything not only not contained, but not referred to, nor in any manner indicated by, its contents. The only laches which the plaintiff can be claimed to have shown is that of forbearing legal proceedings under constant representations from his agent in Nebraska that they would be useless, and with constant promises of payment without resorting to them. We should be sorry,

Digitized by Google

the sake of embarrassed debtors in this state, to have the doctrine that this constitutes laches adopted and declared by this court. A hardship to Brunken doubtless arises out of this disposition of the controversy, but, if one party or the other must be the loser through Mr. Burr's actions, it seems more equitable that it should be the party who deliberately trusted him, and took a conveyance of the premises upon his warranty deed, rather than one who has not trusted to him, and who had no reason to suppose that he was assuming an authority which he had not been given.

It is therefore recommended that the judgment of the district court be affirmed.

DAY and KIRKPATRICK, CC., concur.

Affirmed.

BEER et al. v. PLANT.

(Supreme Court of Nebraska. June 19, 1901.)

ADVERSE POSSESSION—WHAT CONSTITUTES—JUDGMENT OF PROBATE COURT—VALIDITY—EJECTMENT.

1. In order to establish title by adverse possession, it is not sufficient to show continued occupancy for 10 years, but it must also appear that such occupancy was with intent to claim title against the true owner.

2. The signature of the county judge is not essential to the validity of a judgment admitting a will to probate.

3. In probate matters the county court is a court of general jurisdiction, and in such matters its judgments are entitled to the presumptions that attach to other courts of that character.

4. A devisee may prosecute ejectment for the lands devised to him during the pendency of probate proceedings.

Commissioners' Opinion. Department No. 3. Error to District Court, Lincoln County; Norris, Judge.

"Not to be officially reported."

Action by Carry A. Plant against Bernard Beer and another. Judgment for plaintiff, and defendants bring error. Affirmed.

Thos. C. Patterson, for plaintiffs in error. Wilcox & Halligan, for defendant in error.

ALBERT, C. This is an action in ejectment, brought by Carry A. Plant against Bernard Beer and August Feiber. A trial was had which resulted in a verdict for the plaintiff. From a judgment rendered thereon the defendants prosecute error to this court.

The plaintiff in this case claims title as the devisee of Henry B. Plant, who died in 1887, to whom the land in controversy was conveyed in 1883 by the Union Pacific Railroad Company, which held the patent to said land from the United States. The defendants base their defense on the following state of facts: In 1883 the defendant Beer entered into an agreement with the local agent of the Union Pacific Railroad Company for the purchase of the land, and paid a portion of the purchase price, which agreement was su however, to the approval of the land missioner of that company. The land missioner withheld his approval, and the pany refused to consummate the sale tendered back to Beer the money pa him on the purchase price. He refus accept the tender, and at once entered possession of the land, and inclosed it a fence, and continued in possession 1894, when he conveyed it to his code ant, who at once entered into possessio has ever since continued in possession of. In 1895 the defendant Beer decid accept the tender of the money paid b on the purchase price, and it was ret to him by the railroad company. Th fendants do not predicate any right t land upon their contract with the ra company, but rely wholly upon the tit quired by adverse possession.

1. The record discloses that up to the of the conveyance of the land by Beer codefendant, at least, Beer insisted o validity of his contract with the Unio cific Railroad Company, and that his p sion of the land was by virtue of said tract. His occupancy, therefore, wa with intent to claim the title as agains railroad company, the true owner, and not adverse to it. In order to establ title by adverse possession, it is not suf to show a continued occupancy for 10 but it must also be shown that such pancy was with the intent to claim the against the true owner. It is such occu that ripens into a title, when continued period of 10 years. Cervena v. Thurst Neb. 343, 80 N. W. 1048. It is obvious, fore, that Beer's occupancy was not su occupancy as would ripen into a title a the true owner or its privies.

2. It is urged that the court erred in a ting the will of Henry B. Platt in evi for the reason that it was not certifi the manner required by law. It is not sary to determine whether the will intro in evidence was properly certified or no the reason that the records of the pr court showing the will, and the order a ting it to probate, were introduced in dence. The introduction of the will may be regarded as a work of supere tion, and whatever error there may have in admitting it in evidence was error out prejudice. But it is claimed, if w derstand the argument, that the court in admitting the records of the probate in evidence showing the probate of the for the reason that it was not signed b probate judge who held the office at the the will was admitted to probate. Th der of the probate court admitting a w probate is a judgment. A judgment ma proved by an exemplification of the r or by the original roll. This rule is el tary, and requires no citations or autho The signature of the judge is not ess

¶ 1. See Adverse Possession, vol. 1, Cent. Dig. § 67.

Digitized by Google

to the validity of the judgment. Scott v. Romans, 43 Neb. 618, 62 N. W. 46, 47 Am. St. Rep. 767. The county court, in probate matters, is a court of general jurisdiction, and its judgments are entitled to the same presumptions, and is presumed to have jurisdiction until the contrary appears. 17 Amer. & Eng. Ency. of Law (2d Ed.) 1076. As such its records import absolute verity, and are not subject to collateral attack.

3. It is next urged that the devisee cannot prosecute ejectment during the pendency of probate proceedings. The rule is otherwise in this state. Lantry v. Wolf, 49 Neb. 374, 68 N. W. 494.

4. Error is assigned on the giving of certain instructions by the court, but on the face of the record it is clear that the defendants are without the shadow of a title to the land in controversy, and it would have been proper for the court to have directed a verdict for the plaintiff. This being true, whatever error there may have been in the instructions is error without prejudice, because the defendants are not entitled to recover in any view of the case.

We recommend that the judgment of the district court be affirmed.

AMES and DUFFIE, CC., concur.

Affirmed.

COULSON v. GALTSMAN et al.

(Supreme Court of Nebraska. July 10, 1901.)

ATTACHMENT—LIEN ACQUIRED—ENFORCEMENT—CREDITORS' BILL—NOTICE.

1. "Where an attachment is levied on real estate fraudulently alienated by the attachment debtor and grantor, for the purpose of hindering, delaying, and defrauding creditors, even though the legal title of record is in another, the attachment creditor acquires thereby a lien upon the interest of the debtor in the land attached, which he may enforce by appropriate proceedings after recovery of judgment." Westevelt v. Hagge et al. (Neb.) 85 N. W. 852, 54 L. R. A. 333.

2. Where all the parties are nonresidents, the issuance of an attachment and levy upon real estate within four years after a fraudulent transfer will prevent the running of the statute of limitations, if the attachment proceedings are promptly followed up with a creditors' bill.

3. Where all the parties are nonresidents, and plaintiff has no knowledge of any claim ever having been made to any property in this state by the defendant, the mere filing of a deed in this state is not a constructive discovery on the part of plaintiff of fraud in that deed.

Commissioners' Opinion. Department No. 1. Error to District Court, Lancaster County; Holmes, Judge.

"Not to be officially reported."

Action by Joseph Coulson against Hannah Galtsman and others. Judgment for defendants, and plaintiff brings error. Reversed.

¶ 1. See Attachment, vol. 5, Cent. Dig. § 524; Fraudulent Conveyances, vol. 24, Cent. Dig. §§ 665, 658, 708.

John P. Maule, for plaintiff in error. Ricketts & Wilson and Wilson & Brown, for defendants in error.

HASTINGS, C. On November 16, 1896, there was filed in the district court of Lancaster county a second amended petition by the plaintiff, setting out that October 10, 1893, he commenced an action in that court against John Clark, Sr., and issued an attachment and levied the same on 80 acres of land in Lancaster county, and subsequently, on March 12, 1895, obtained judgment in that action against John Clark for $486, together with an order of sale of the attached land; that Clark never lived in Nebraska, became owner of the land September 19, 1895, and then and ever since has lived in Ohio; that the indebtedness on which the judgment was taken was incurred in Ohio, March 11, 1879; that Clark had no property in Ohio, and plaintiff did not learn until just before October 10, 1893, that he had any interest in the land attached; that, for the purpose of defrauding the plaintiff, Clark made a conveyance of the land to Martha J. Clark, his wife, and caused it to be filed for record in Lancaster county November 12, 1889; that plaintiff is a resident of Ohio, and had no knowledge of such deed until just before October 10, 1893; that an affidavit for service of publication was filed in the original attachment suit, and the defendant appeared and took part in the trial of the case; that November 2, 1893, Martha J. Clark, without any consideration, mortgaged the 80 acres of land to Sherman Clark, a son of John Clark; that Martha J. Clark died, still the wife of defendant John Clark, August 5, 1895, and the defendants other than John Clark are her sole heirs at law; that the land was worth $2,000, but by reason of the conveyances would not sell on execution; that John Clark, Sr., was insolvent, had no property in Ohio, and asks that the deed to Martha J. Clark, and the mortgage from Martha J. Clark to Sherman Clark, be canceled and the premises sold. A general demurrer was filed to this petition, which was sustained by the court, and, plaintiff electing to stand upon his petition, judgment was entered dismissing the action for costs. The case was then brought to this court by petition in error. The errors alleged being the sustaining of the demurrer, that the judgment is contrary to law, and that the court should have overruled said demurrer.

It is objected that this petition, first, seeks to found creditors' bill proceedings upon an attachment; and second, upon its face the action is barred by the statute of limitations, because it alleges the deed to Martha J. Clark to have been filed in Lancaster county November 12, 1889.

The first question no longer seems to be an open one in this state. It seems to have been held, in quite an extensive line of decisions, that one who had title to real estate,

Digitized by Google

and has fraudulently conveyed it, by deed void as against the attaching creditor, has still an attachable interest in the land, and when an attachment is levied it will create a lien which may be enforced by equitable proceedings. Keene v. Sellenbach, 15 Neb. 200, 18 N. W. 75; Bank v. Hollerin, 31 Neb. 558, 48 N. W. 392. It has sometimes been thought that a different rule was laid down in Shoemaker v. Harvey, 43 Neb. 75, 61 N. W. 109; but the recent case of Westevelt v. Hagge (Neb.) 85 N. W. 852, 54 L. R. A. 333, distinguishes the latter case, and proceeds distinctly upon the authority of the earlier ones. Of course, if it is conceded that plaintiff's attachment created a lien, and the conveyance attacked created a cloud upon the title, which prevents a sale under that lien, plaintiff is entitled to resort to a court of equity to enforce it.

The second proposition, that the petition on its face discloses that the action is barred by the statute of limitations, seems no better taken. The proceedings by attachment were begun October 10, 1893, and, as the parties were all residents of Ohio, there was no other method whereby to proceed in this state. The creditors' bill would not lie until such proceedings had ripened into a judgment. Weil v. Lankins et al., 3 Neb. 384. The attachment proceedings were commenced within four years of the recording of the deed, and, if they secured a lien, such lien was only available as a basis of the creditors' bill proceedings upon the rendition of judgment, March 12, 1895. This second amended petition was filed, as above stated, November 16, 1896. But, in any event, we do not think that the mere filing of the deed in Lancaster county, by parties resident in Ohio, would set the statute of limitations in motion as against another party, also a resident of Ohio, who alleges that he had no knowledge that any of the defendants were making claim to any such property in Nebraska. The statute of limitations provides that an action for fraud shall be barred within four years after the discovery of the fraud. It is true that in Gillispie v. Cooper, 36 Neb. 775, 55 N. W. 302, where all the parties were residents, and had knowledge sufficient to put them on inquiry as to fraud, it was held that some form of action attacking the specific property must be brought within four years from the filing of the fraudulent deed. It does not seem that any such rule of constructive discovery should be held to protect property in a distant state where none of the parties reside, and of which the creditor alleges that he had no knowledge whatever.

It is therefore recommended that the judgment of the district court be reversed and the cause remanded.

DAY and KIRKPATRICK, CC., concur.

Reversed and remanded.

GODDARD v. CLARKE et al.

(Supreme Court of Nebraska. Oct. 16.

MORTGAGE—FORECLOSURE—FINDIN
INVALIDITY.

1. The fact that a cross-petitioner d
produce evidence that no legal proceedin
been had to collect the debt secured
mortgage does not warrant a finding by t
court that the mortgage is void and uner
ble.

2. A decree rendered on the express
that a mortgage was invalid and no con
cannot be sustained on the ground of
privity between the grantor and the def
claiming the property merely because t
proof of such privity was an abstract a
in evidence and acted upon as true by t
court, without authentication, and over
tion as incompetent.

3. Note and mortgage running to Cr
University, trustee for Creighton Colle
valid and enforceable obligations, notwit
ing that there has been no legal incorp
of Creighton College.

Commissioners' Opinion. Departme
1. Appeal from District Court, D
County; Scott, Judge.

"Not to be officially reported."

Action by Frederic U. Goddard
Henry T. Clarke and others. Judgme
plaintiff, and Creighton University, t
appeals. Reversed.

A. E. Walkup and Woolworth & M
for appellant. Wright & Stout and
gomery & Hall, for appellees.

HASTINGS, C. There seems no o
for any very extended discussion of thi
It is a suit to foreclose a real estate
gage given by one Charles N. Clarke
deceased, to secure a note signed by hi
defendant Henry T. Clarke for $5,000.
mortgage is alleged to have been re
May 15, 1893. Defendant Creighton U
sity answered, making a number of ne
ties, and setting up a mortgage to it b
liam F. Sweesy and wife, of October 3
on the same property, with other pr
in Omaha, to secure a note for $10,0
7 per cent. interest, both note and mo
running to "Creighton University, Tru
Creighton College." It is not alleged t
ever been recorded, but a copy attach
dicates that it was recorded October 3
and such an indorsement appears up
mortgage in evidence, and the plaintiff
that he had no notice of the instrume
cept its record, and the bill of exc
contains an agreement to the same
It will accordingly be treated in this
as recorded at that date. To plaintiff'
tion and this cross-bill defendant Beller
swered, denying generally, except th
claimed an interest in some of the pr
said that Creighton College had no le
istence, and set out notes and a mo
for $6,000 of Charles N. Clarke cove
portion of the property embraced in th
versity's mortgage different from that
ed by plaintiff. The Penn Mutual L

Digitized by Google

surance Company answered, denying all the allegations in the petition and cross-petitions, and setting up two judgments—one of June 19, 1895, for $8,102, and one of September 23, 1895, against Henry T. Clarke—which it claimed were first liens on all the property. Plaintiff then answered the cross-petition of Creighton University, denying knowledge of its mortgage, except constructively from its record, denied its being a lien, and claiming its invalidity because there was no beneficiary to take, and "therefore the plaintiff denies each and every allegation contained in the cross-petition of the Creighton University, trustee for Creighton College." Penn Mutual Life Insurance Company then amended its answer to include similar allegations against the lien of Creighton University. No reply was filed. At the trial the several mortgages and judgments were admitted in evidence, and also an abstract showing the mortgage to the university, and transfers since, through the same grantors, including the other mortgages. It was agreed that there was a school called "Creighton College" organized before the university of that name, and had been maintained since as a part of that institution, but never incorporated. All evidence of funds bequeathed to Creighton College and of its relations to the university in matters of property and otherwise was rejected. A decree was entered giving plaintiff and defendant Bellemy first liens on the respective portions of the property embraced in their mortgages, and to the insurance company second liens on the same property and first lien on the rest for the amounts of the judgments.

As to the university's rights the finding is as follows: "The court further finds that the mortgage recorded in Book 182 of Mortgages, at page 214, of the records of the county of Douglas, state of Nebraska, which is set forth in the cross-petition of Creighton University, trustee for Creighton College, is void and ineffectual for the purpose of conveying any title or interest in the real estate therein described, to wit, lots one (1), two (2), three (3), four (4), five (5), six (6), seven (7), eight (8), nine (9), ten (10), eleven (11), twelve (12), thirteen (13), and fourteen (14), in block four (4), in Sweesy's addition to the city of Omaha, county of Douglas, state of Nebraska, and that there is no beneficiary in existence as named in said mortgage, and that the said defendant Creighton University, trustee for Creighton College, is not entitled to foreclose said mortgage as against the parties hereto, to wit, the plaintiff and defendants Anna M. J. Bellemy and the Penn Mutual Life Insurance Company." We are asked to uphold this decree, because the record does not disclose proof that the university had not commenced legal proceedings. In Jones v. Burtis, 57 Neb. 604, 78 N. W. 261, this court held that a decree for one who had failed to show this fact would not be upheld. That is not to say that a decree which wholly sets aside the lien, and puts before it others of later date and many thousand dollars' amount, may be entered, and must be upheld, if this proof is lacking. The utmost that this lack of proof would warrant would be a dismissal without prejudice either to the validity or relative priority of the University's lien.

It is urged that the proof of the record is not in. Surely, the pleading of plaintiff that he has no notice but the record, the agreement that such is the case, and the admission of the instrument itself, with the time of filing for record indorsed thereon, without specific objection on that ground, is warrant enough for the court to find, as is done, that the mortgage was recorded. There is to be considered, too, what weight should be given to the abstract of title which was admitted in evidence by the trial court. It is claimed also that there is no competent proof of privity between Sweesy from whom the University got its mortgage and the other parties and so no right of foreclosure. It is true that the only evidence of such privity is the abstract just mentioned. It was objected to as incompetent, irrelevant and immaterial, and was admitted over such objection. There is no recital in the abstract that it is made by a bonded abstractor, and no objection in the record that it is not. It is true that section 67, c. 73, Comp. St. 1901, provides only for the use as evidence of abstracts "as herein provided." But the same act makes unlawful the issuance of an abstract by one who has not furnished bond. This, coupled with the admission of the abstract without specific objection on that ground seems to warrant the assumption that it was a regular abstract. This court can hardly presume merely from the absence of such a recital that the abstractor was violating the law. The action of the trial court was upon the express admission of this evidence and the assumption of its truth. This court cannot now, in order to uphold this decree, assume the abstract false. The party must, as to this, be at least allowed to show the real truth.

But it hardly seems necessary or desirable to discuss such points in reference to this decree. The action of the trial court necessarily involved the validity of the university's mortgage. If its conclusion that the mortgage is invalid is wrong, then this decree cannot be upheld. That such conclusion is right is only perfunctorily asserted by the appellees. The money which Sweesy borrowed from the university either belonged to that institution, or to some one else, or to no one. It assuredly was not Sweesy's. If it belonged to the university, the latter can recover on its own account. If it belongs to any one else, it can be recovered as trustee for that party, whoever he may be. If it belonged to no one, the university can hold it till the state asserts its right of escheat. Sweesy, who got the money on this promise and security to return it, is, with all his privies,

Digitized by Google

estopped to claim, as against the payee, that there is no one to whom the fund belongs. Whether it belonged to any one or not, it was in the university's possession, and the getting of it was an ample consideration for the note and mortgage as against the borrower and all his privies. The allegation of no beneficiary states no defense to this action for borrowed money, and therefore the theory on which it was met seems of no importance.

The cases cited by appellee as to conveyances to nonexisting parties are not in point. If Sweesy had been selling this land to the university, and had made this deed to one who could not take, he would be liable for money had and received, if, after getting payment, he asserted title in himself, and refused to give possession or return the money. A mortgage given in settlement of such a claim would clearly be enforceable. Certainly he and his privies are equally liable on this express agreement to repay the money, and that this property shall be its security. The mortgage must be as enforceable as the note. If the university has a clear legal right to the money, it has just as clear an equity in the land to the amount of such money. The mortgage is a mere incident that goes with the debt.

The point that this mortgage was defended in the lower court on the ground that an organized, though unincorporated, school would be a sufficient beneficiary, and that the case must stand on that footing here, we do not care to discuss. The cases cited by counsel that in the case of a public charity this beneficiary is sufficiently definite seem conclusive, but it is not necessary to take that ground.

Since the state of the record precludes, under the rule of Jones v. Burtis, the granting of affirmative relief to the university, it is recommended that the decree be reversed and set aside, and the cause remanded for further proceedings.

DAY and KIRKPATRICK, CC., concur.

Reversed and remanded.

BUFFUM v. DESCHER et al.

(Supreme Court of Nebraska. Oct. 1, 1901.)

SALE—VENDOR OR AGENT—LIABILITY FOR PRICE.

1. When goods are transferred by one person to another for sale and disposition by the latter, the question whether the relation of the parties is that of principal and agent or of vendor and vendee is determined by the nature of the transaction, and not by the name which they give to it. If, in such case, the transferee, upon delivery to him, acquires absolute dominion over the goods, with the right to sell and dispose of them at such prices, and upon such terms as he shall see fit, and becomes bound to pay a stipulated sum for them, either at a specified time or upon the happening of any future event, as, for instance, when he shall have sold them, he becomes the purchaser of the same and the title thereto at once passes to him.

Commissioners' Opinion. Department 3. Error to District Court, Lancaster C ty; Holmes, Judge.

"Not to be officially reported."

Action by Austin W. Buffum against seph F. Descher and others. Judgment defendants, and plaintiff brings error. firmed.

L. P. Davidson, for plaintiff in error. M ing & Berge, for defendants in error.

AMES, C. This is a petition in erro review a judgment of the district court Lancaster county in an action of repl The plaintiff was engaged in the man ture and sale of flour, and delivered a q tity of that article to the defendant Des a retail grocer, upon the following te There were four brands or qualities of f each having a specific price or valuation sack put upon it, which was to be pa or received by the plaintiff. The deli was accompanied by a schedule or list o amounts of the different kinds of flour, of the prices of each, which were c "wholesale prices," and Descher gave plaintiff a receipt for the same, which written on a printed form, upon which printed the words "on commission." Ne the word "bought" nor "sold" was put either paper. Nothing was said about ownership of the flour after delivery, nor any retail selling price, nor any commis properly so called, agreed upon. It agreed that Descher should sell the flou such price or prices as he should see fit, that whatever sums he should obtain for same in excess of those named in the s ule should be retained by him for his use, but he was at liberty to sell for than those sums if he chose so to do incur a personal loss for the difference. business was carried on for several y frequent settlements between the parties ing made by this method: The amoun flour on hand and the value thereof at s ule prices was ascertained by counting sacks. To the amount and value so a tained to have been on hand at the prev settlement was added the like valuatio the quantity delivered in the interval, and difference between the two sums was tre as an indebtedness due from Descher to plaintiff. It was agreed that Descher sh not be called upon to pay for any flou any time on hand until he should have or disposed of the same, which he had unlimited right to do; but he also had right, if he chose, to retain the unsold f and pay for it at the schedule prices. A the business had continued for a time, De er failed, and the flour in controversy wa part thereof, taken possession of by Steinberg under the claim of a sale the to him by Descher, and a part thereof claimed by one Roscoe C. Scott under a c tel mortgage executed to him thereon

Digitized by Google

Descher. These two persons intervened in the replevin suit. Descher still retained a small quantity of the flour, which he claimed as his own. A trial in the district court resulted in a verdict and judgment for the defendant Descher, and for the interveners to the extent of their respective claims, and the suit is brought here by the plaintiff.

The first inquiry presented is whether the transactions between the plaintiff and Descher, about which there is no substantial conflict of testimony, amounted to a sale and delivery of the flour to the latter by the former, or whether the latter became a mere agent for the sale of the flour, and the title thereto, until sale, remaining in the plaintiff. Upon this point the defendants in error cite a considerable number of authorities, which seem to us to solve the question at issue in their favor. Baker v. Turner (Sup.) 46 N. Y. Supp. 25, is almost identical with the case at bar. A succinct statement of the facts and law is contained in the syllabus of the opinion in that case, which we quote as follows: "It was agreed that between certain dates a firm would consign as many flags as the consignee should order, and that on a later date the consignee should render an account, and pay to the consignor, 'from the amount received for said flags,' the amount at which they were billed to the consignee. The consignee's right to sell was unlimited, and it could return flags left unsold, or retain them at the consigned price. Held that, since the consignee had the right to sell at less than the consigned price, or take the flags itself, the relation between consignor and consignee was merely that of creditor and debtor." The case of Mack v. Drummond Tobacco Company, 48 Neb. 397, 67 N. W. 174, 58 Am. St. Rep. 691, and of Yoder v. Haworth, 57 Neb. 150, 77 N. W. 377, 73 Am. St. Rep. 496, differ from Baker v. Turner, supra, and from the case at bar, as respects the particular feature now under consideration, only in the circumstance that in each of those cases the consignee expressly agreed to pay for the goods by giving his note therefor, which, of course, specified a time of payment; but in this case there was also an express agreement to pay for the flour, although the same was not in writing, and the time of payment was contingent upon that of the sale by Descher. These differences are not such as to affect the legal relations of the parties. There was no stipulation for the return of the flour to the plaintiff in any event. Descher acquired complete dominion over it, with the right to sell it for such prices and upon such terms, whether for cash or on time, or absolutely or conditionally, as he should see fit. The sale of a part of it to Steinberg and the mortgaging of another part of it to Scott were, the former expressly, and the latter by necessary implication, within the exercise of these powers. Each, as it occurred, matured the debt from Descher to the plaintiff as to the flour affected by it, and the contract between the parties would have been fully satisfied, both in spirit and letter, if, when the sale and mortgage were made, the schedule prices had been paid to the plaintiff. The doctrine of the foregoing authorities is fully sustained by the decisions in Bretz v. Diehl, 117 Pa. 589, 11 Atl. 893, 2 Am. St. Rep. 706; Chickering v. Bastress (Ill.) 22 N. E. 542, 17 Am. St. Rep. 311; Lemp v. Ryus (Colo. App.) 42 Pac. 169; and In re Linforth, 4 Sawy. 370, 15 Fed. Cas. 558 (No. 8,369). In all the cases it is held that the relation of the parties as principal and agent or as vendor and vendee is determined by the nature of the transaction, and not by the name which they give it, and the use of the words "agent," "commissions," etc., is of little significance. If the goods are delivered to the "consignee" under such circumstances as to confer upon him absolute dominion over them, and he becomes bound to pay a stipulated price for them at a certain time, or upon the happening of any future event, the transaction amounts to a sale and delivery, and the title passes to him.

There are other alleged errors, which were presented and discussed in the briefs and arguments, which would have been important to consider if the title to the flour in controversy had remained in the plaintiff, but which, in view of the conclusion already reached, do not require decision.

The result arrived at in the district court is the only one which, under the law and the facts above recited, could have been upheld, and we therefore recommend that the judgment be affirmed.

ALBERT and DUFFIE, CC., concur.

Affirmed.

SULLIVAN, J., absent, not voting.

DAHL v. STAKKE et al.

(Supreme Court of North Dakota. Aug. 11, 1903.)

COVENANT AGAINST INCUMBRANCES—BREACH — PURCHASE-MONEY NOTES — FAILURE OF CONSIDERATION — RETENTION OF POSSESSION — APPEAL — DIRECTION OF VERDICT — FAILURE TO EXCEPT.

1. The trial court directed a verdict for the plaintiff, and no exception was taken to such direction. The defendant moved for a new trial, and specified as grounds for granting the same that the evidence was insufficient to sustain the verdict. Upon an appeal from the order denying the motion for a new trial, it is *held* that the sufficiency of the evidence to sustain the verdict is reviewable in this court, although no exception was taken to the direction of a verdict. De Lendrecie v. Peck, 48 N. W. 342, 1 N. D. 422, overruled as to this point.

2. A covenant against incumbrances in a warranty deed is broken when made, if incumbrances exist on the land conveyed when the deed is delivered.

¶ 2. See Covenants, vol. 14, Cent. Dig. § 111.

Digitized by Google

3. The real consideration for a promissory note given for the purchase price of land conveyed by warranty deed containing a covenant against incumbrances is the title to the land free from incumbrances, and not the covenant against incumbrances.

4. The defense of a total or partial failure of consideration may be interposed, in an action on promissory notes given for the purchase price of land, in case of a breach of a covenant against incumbrances, when the maker has paid off the incumbrance.

5. The extent of the failure of consideration will depend upon the amount paid in good faith by the maker for a discharge of the incumbrance.

6. Such defense may be interposed in such cases although the maker of the note has remained in continuous possession of the premises sold.

(Syllabus by the Court.)

Appeal from District Court, Cavalier County; W. J. Kneeshaw, Judge.

Action on purchase money notes by Hans C. Dahl against Andrew J. Stakke and another. Judgment for plaintiff, and defendants appeal. Reversed.

Halvor Steenerson, Charles Loring, and Gordon & Lamb, for appellants. Spencer & Sinkler, for respondent.

MORGAN, J. On the trial in the district court, the court directed a verdict in plaintiff's favor for the full amount claimed in the complaint. The defendants saved no exceptions to rulings made during the progress of the trial, and took no exception to the direction of a verdict in plaintiff's favor. The respondent now claims that this court cannot review any of the errors alleged to have been committed by the district court, for the reason that no exceptions were taken to any of the rulings in the district court. The appellants moved to set aside the verdict and for a new trial upon a settled statement of the case, and, among other grounds of such motion, specified that the evidence was insufficient to justify the verdict. The particulars wherein such evidence was insufficient to justify the verdict were pointed out and specified in such motion. The specifications of error in the statement of the case contained, among others, one that the court erred in directing a verdict in favor of the plaintiff. The question is therefore presented whether the sufficiency of the evidence to sustain the verdict can be reviewed in this court when no exception was taken to the direction of the verdict, but a motion for a new trial was made on the ground that the evidence is insufficient to sustain the verdict. Section 5463, Rev. Codes 1899, provides that the verdict of the jury and an order granting or denying a motion for a new trial are, among other matters, "deemed to have been excepted to and the same may be reviewed both as to questions of law and the sufficiency of the evidence upon motion for a new trial, or upon appeal, as fully as if exception thereto had been expressly made." Section 5627 provides: "Upon an appeal from a judgment, the Supreme Court may re any intermediate order or determinati the court below, which involves the n or necessarily affects the judgment ap ing upon the record transmitted or ret from the district court, whether the is excepted to or not."

This court held, in De Lendrecie v. 1 N. D. 422, 48 N. W. 342, that the a of a trial court in directing a verdict not be reviewed on appeal when no exce was taken to such action. That is a c statement of the law in cases whe subsequent proceedings were brought b the court to review the correctness of ruling. In other words, the correctne the trial court's rulings must be some challenged in that court before the app court will review the erroneous ruling plained of. Kirch v. Davies (Wis.) 11 689; McGary v. De Pedrorena, 58 Ca The case of De Lendrecie v. Peck, goes further, however, and holds tha sufficiency of the evidence to sustain a dict cannot be reviewed on appeal when its correctness is challenged on tion for a new trial based on the i ciency of the evidence. We cannot that decision in so holding. To the tion of the verdict there was no exce That fact rendered the ruling not revie as an error of law occurring at the But the sufficiency of the evidence to tify the verdict was subsequently chall on a motion for a new trial, in whic insufficiency of the evidence to sustai verdict was urged as a ground for revi the evidence and granting a new trial. motion was denied. The statute gran exception to the ruling denying a new and it is not therefore necessary tha be taken by the party. The order deny new trial is an order involving the and necessarily affecting the judgment may be reviewed on an appeal from the ment, whether excepted to or not, unde tion 5627, Rev. Codes 1899. A case in p Morris v. National Pro. Society, 106 92, 81 N. W. 1036, in which it is said is true that no exception was taken t denial of the motion to direct a verdi defendant, but a motion was made t aside the verdict and for a new trial, was overruled, and it has been distinctly that, where it appears by the record such a motion has been denied, this may, on appeal from the judgment and out exception to the order, examine th ord to see whether there was any evi to support the verdict, and if there was or if there was a clear preponderanc other way, may reverse the judgme that ground. Tourville v. Nemadje B 70 Wis. 81, 35 N. W. 330. See, also, We v. Phœnix Ins. Co., 36 Wis. 67, 17 Am. 479. This ruling was made because th der (when made part of the record b bill of exceptions) is one of the orders

ered by section 3070, Rev. St. 1898, and by the express terms of that section may, without any exception thereto, be reviewed upon appeal from the judgment." We conclude, therefore, that the evidence may be reviewed by us to determine whether there was error in denying the motion for a new trial.

The complaint alleges the making and delivery of certain promissory notes, and that they were given for the purchase price of lands described in the complaint. The answer alleges that the consideration for the notes totally failed; that they were given for the purchase price of lands to be conveyed to the defendant Andrew J. Stakke by deed, free and clear from all incumbrances; that said lands were not conveyed clear of incumbrances; that mortgages against said lands were permitted to be foreclosed and the time for redemption to expire, and the title to said lands passed entirely out of plaintiff's control, whereby it became impossible for the plaintiff to perform his contract. The notes sued on were given to the plaintiff by the defendants for the purchase price of 320 acres of land. No cash payment was made on said purchase, and the notes represented the sum to be paid for said lands. A warranty deed was delivered to the purchaser, and defendants immediately went into possession of the premises, and have remained in possession ever since. The deed to said premises was lost, and secondary evidence was given as to its terms. The evidence is silent as to what covenants it contained, save that it contained a covenant that the premises were free and clear of all incumbrances. After going into possession, the defendant was informed that mortgages upon the premises conveyed to him by plaintiff were being foreclosed by advertisement. The foreclosure proceeded to a sale, and the premises were bid in by the mortgagees. The redemption period under one mortgage expired on the 27th day of May, 1894, and a deed was issued to the purchaser on the 30th day of October, 1894. The redemption period under the other foreclosure expired on the 31st day of August, 1893, and a deed was issued to the purchaser on October 31, 1899. The mortgage under which the last foreclosure was made was given subject to a prior mortgage on said premises given in 1887 for the sum of $250, with interest thereon at 12 per cent. per annum. After the foreclosure sales, and before the time for a redemption had expired, the defendant Andrew H. Stakke leased the premises from the purchasers at the foreclosure sales for an annual cash rental. This lease continued in force for two years. At the expiration of this lease the defendant purchased these lands from the purchasers at such foreclosure sale under the crop payment plan. The redemption period expired without redemption, and deeds were issued to the mortgagees by the sheriff. The redemption period had expired under both foreclosures when the defendant purchased the lands from the purchasers at the mortgage foreclosure sales. The total amount of incumbrances on the land on July 1, 1891, when plaintiff conveyed the lands to the defendant, was $648.33, without interest; with interest added, the amount was less than $839, the price agreed to be paid for the land. The price agreed to be paid for the lands was the sum of $839. The defendant paid the sum of $163.73 upon the notes in suit on October 10, 1893, before he had notice that the mortgages were being foreclosed.

When the taking of testimony closed, the trial court directed a verdict for the plaintiff on the notes. The grounds of the motion made for a directed verdict were that the defendant went into possession of the premises under the deed, and has remained in possession thereof ever since, and has never been ousted or ejected therefrom, and that defendant is estopped to set up an outstanding title, he having entered into and remained in possession under plaintiff's deed.

In this court it is claimed on behalf of the appellants that the consideration for the notes has wholly failed by reason of the failure of the plaintiff to perform his covenant that the lands were free from incumbrances. The respondent contends that, the defendant having remained in possession, he cannot interpose this defense. The decision of the case must turn upon an answer to the question, what was the consideration for the notes? The plaintiff claims that the consideration for the note was the conveyance of the fee with a covenant against incumbrances. He claims that the promise to pay and the covenant against incumbrances are separate and independent promises, and the failure of the covenant against incumbrances does not affect the promise to pay; that appellants' remedy lies in an action for damages on the breach of the covenant, and that, if damages were incurred by virtue of a breach of this covenant, they cannot be adjusted in this action, but must be litigated in another action. The appellants contend that the consideration for the notes was the title to the land free from incumbrances, and that, the covenant against incumbrances having been broken, and he having been compelled to buy the title, which had vested indefeasibly in third parties by virtue of the foreclosure of such mortgages, the consideration for the notes has wholly failed. We cannot coincide with respondent's contention, although it is supported by respectable authority. The real consideration for the notes in this case was the title to the land free from incumbrances. The defendant gave his notes for the land free from incumbrances, and did not give them in view of the plaintiff's covenant that the land should be free from incumbrances. In Rice v. Goddard, 14 Pick. 293, the court said: "The promise is not made for a promise, but for the land; the moving cause is the estate;

Digitized by Google

if that fails to pass, the promise is a mere nudum pactum." In Whitlock v. Denlinger, 59 Ill. 96, it was said: "It is true, the land and not the covenants of the deed is the true consideration of the deed." Rawle on Covenants, § 327. See, also, Am. & Eng. Enc. L. vol. 8, p. 208, where it is said, referring to the rule contended for by respondent: "This rule, however, has not been followed by the modern decisions, and the grantee is now permitted, in an action for the recovery of the purchase price, to set up a total failure of title as a total failure of consideration." Dunning v. Leavitt, 85 N. Y. 80, 39 Am. Rep. 617; Cook v. Mix, 11 Conn. 432; Fleetwood v. Brown, 109 Ind. 567, 9 N. E. 352, 11 N. E. 779; La Pene v. Delaporte, 27 La. Ann. 252; Mason v. Wait, 4 Scam. 134; Hall v. Perkins, 4 Scam. 548; Schuchmann v. Knoebel, 27 Ill. 177; Deal v. Dodge, 26 Ill. 460; Davis v. McVickers, 11 Ill. 328; Lull v. Stone, 37 Ill. 229. It is also contended that the defense of failure of consideration, either total or partial, cannot be interposed in an action for the purchase price of the land, but that defendant must resort to an action on the covenant against incumbrances contained in the deed. Section 5273, Rev. Codes 1899, permits pleading by way of answer any "statement of any new matter constituting a defense or counterclaim." It is not disputed that, if the covenant in this deed against incumbrances has been broken, an action would lie on the covenant for whatever damages the defendant suffered by reason of such breach of the covenant, not exceeding the consideration money. The only question involved, therefore, is whether the damages thus incurred can be determined in the present action, there being no allegation or proof that plaintiff is insolvent. Under many decisions, the policy is favored of putting an end to litigation by settling all issues connected with the cause of action set forth in the complaint in that action, and thereby avoiding the expense, delay, and inconvenience of circuity of action or multiplicity of suits. Rawle on Covnts. § 326, says: "Yet, as has been said, it is now considered that he should not be compelled to pay over purchase money which he might next day recover in the shape of damages for a breach of his covenants; and hence, to prevent circuity of action, the defense at law of a failure of title has been in some cases allowed." See, also, Knapp v. Lee, 3 Pick. 452; Davis v. Bean, 114 Mass. 358; Glenn v. Thistle, 1 Cushm. (Miss.) 42; Slack v. McLagan, 15 Ill. 242; McDaniel v. Grace, 15 Ark. 489; Brandt v. Foster, 5 Iowa, 298; Nesbitt v. Campbell, 5 Neb. 429; Pence v. Huston's Ex'rs, 6 Grat. 304; Doremus v. Bond, 8 Blackf. 368; Walker v. Johnson, 13 Ark. 522; Desha's Ex'rs v. Robinson, 17 Ark. 228; Chitty on Cont. p. 703; Durment v. Tuttle, 50 Minn. 426, 52 N. W. 909; Mills v. Saunders, 4 Neb. 190; Warren v. Stoddart (Idaho) 59 Pac. 540; William Farrel Lumber Co. v. Deshon (Ark.) 44 S. W. 1036.

We conclude that total or partial failure of consideration or want of consideration may be shown as a complete or partial defense in an action on a note given for the purchase price of land sold with covenants, where the title has failed or partially failed; and that, in case of a breach of a covenant against incumbrances, the purchaser is entitled to a credit on a note given for the purchase price of real estate of the amount paid by him to protect his title against such mortgage by paying said mortgage. The evidence in this case, however, does not show a total failure of consideration for the notes sued on. When the deed was delivered, the mortgages on the land were less than the price agreed on for the land, evidenced by the notes. It is also true that, when the deeds were delivered to the defendant by the mortgagees who had foreclosed the mortgages and received sheriff's deeds, the whole amount of the incumbrances and interest was less than the purchase price with accumulated interest. The defendant paid the sum of $1,250 for the title which had been secured by the purchasers under these foreclosure sales. The purchase price as represented by his three notes, with interest thereon, amounted to more than $1,250, after giving credit for the payment of $163.78. So that, from whatever view it may be considered, the mortgages did not exceed the purchase price. Hence the notes represented a consideration over and above the incumbrances.

Respondent's contention, and the ground upon which the trial court directed a verdict, is that defendant, having gone into possession of the premises under the deed, and not having since been ousted or ejected from such possession, is not relieved from the payment of the purchase price; that, if a purchaser buys an outstanding title to protect his title, such purchase inures to the benefit of his grantor; that he cannot buy an outstanding title, remain in possession, and defeat recovery for the possession of the purchase price. It is true that a total failure of title in many cases is not ground for resisting payment of the purchase price if the purchaser remains in possession of the premises, and is not threatened with dispossession, and does nothing towards protecting himself against such adverse title, and is not in any way disturbed or damaged by such outstanding title, it not being hostilely asserted against him. The grounds upon which such cases turn are that such possession may ripen into a good title by the lapse of time, and that the law will not countenance a purchaser in accepting and holding possession and title which are not attacked and to perfect which the purchaser has done nothing, and at the same time refuse to pay for the land. Mecklen v. Blake, 22 Wis. 495, 99

Digitized by Google

Am. Dec. 68. Such are not the facts in this case. The defendant has bought the outstanding title held by third parties by virtue of the foreclosure of the mortgages on the premises when the plaintiff conveyed them to the defendant. In this case it is not material whether the defense be considered as one arising by virtue of the purchase of an outstanding title hostilely asserted, or by virtue of the payment of a valid mortgage against the premises. The outstanding title grew out of the mortgages, and the principles of law applicable are not materially different, except that, before the outstanding title can be purchased with safety, it must be hostilely asserted against the possession of the purchaser of an inferior title. The covenant of the deed was that the premises were free from incumbrances. We will therefore treat the case as arising by virtue of a breach of a covenant against incumbrances. The answer does not well plead this defense, but as the answer contains a general denial, and no objection was made to the answer as not sufficient to warrant the defense, we will treat it as sufficient; and, as no objection was made to any of the evidence substantiating this defense on the ground that such defense was not well pleaded, we deem all objections thereto waived. The objection to a defense, arising out of the breach of a covenant against incumbrances, that there has been no eviction, cannot be sustained. A covenant against incumbrances is a covenant that is broken when made if the incumbrance then exists. Rawle on Covnts., and cases cited under section 188; Lawrence v. Montgomery, 37 Cal. 183; Marbury v. Thornton, 82 Va. 702, 1 S. E. 909; Thayer v. Clemence, 22 Pick. 493; Carter v. Denman's Ex'rs, 23 N. J. Law, 260; Blondeau v. Sheridan, 81 Mo. 545; Guerin v. Smith, 62 Mich. 369, 28 N. W. 906. If a valid mortgage exists on the land when the deed containing the covenant is delivered, a cause of action for a breach of such covenant arises immediately. The existence of the cause of action for such breach, as such, alone entitles the purchaser to no more than nominal damages, unless he has suffered greater damages by paying the mortgage. In that event, his damages are the amount necessarily paid by him to remove such mortgage, not exceeding the consideration money. If a valid mortgage exists against the land, he may pay off such mortgage before foreclosure or after foreclosure. The existence of such mortgage entitles him to his damages on a breach of the covenant whenever he pays off the mortgage. Section 4982, Rev. Codes 1899. As said in Delavergne v. Norris, 7 Johns. 358, 5 Am. Dec. 281: "If the plaintiff, when he sues on a covenant against incumbrances, has extinguished the incumbrance, he is entitled to recover the price he has paid for it. But if he has not extinguished it, but it is still an outstanding incumbrance, his damages are but nominal, for he ought not to recover the value of an incumbrance on a contingency where he may never be disturbed by it." Rawle, § 149, says: "If the title be defective, or if an incumbrance exist, the purchaser has a right of action which, as such, is not affected either beneficially or injuriously by the purchase of the paramount claim. Such a purchase merely affects the question of damages, and, moreover, the question whether the claim is or is not asserted, and, if asserted, to what extent, has nothing to do with the right of action. It is sufficient if such claim exists." Jones on Law of Real Property says: "When, at the time of the conveyance, there is an outstanding lien or incumbrance, the grantee need not wait until he is evicted. If the grantee extinguishes the incumbrance, he may recover the amount so paid. If he has not extinguished it, he can recover only nominal damages." Section 891. Mills v. Saunders, 4 Neb. 190; Warren v. Stoddart (Idaho) 59 Pac. 540; Kramer v. Carter, 136 Mass. 504. The defendant was therefore entitled to a credit on his notes for the sum of $1,250 paid for outstanding title resulting from the foreclosure of the mortgages. It was error to direct a verdict for the plaintiff without allowing credit for this sum.

The judgment is reversed, a new trial granted, and the cause remanded for further proceedings according to law. All concur.

PINE TREE LUMBER CO. v. CITY OF FARGO.*

(Supreme Court of North Dakota. July 21, 1903.)

MUNICIPAL CORPORATIONS—PUBLIC IMPROVEMENTS—POWER TO CONTRACT—SPECIAL ASSESSMENTS—COLLECTION — MISAPPROPRIATION—ACTION FOR DAMAGES—OBJECTION TO EVIDENCE.

1. Cities organized under the general incorporation act are authorized to alter, extend, grade, pave, and improve streets, and to make contracts therefor. They are authorized to provide for the expense of making such improvements by special assessments upon adjoining property, but such cities are not restricted so as to require them to contract for payment for such improvements only out of the particular fund realized from special assessments.

2. There is no charter restriction upon the power of a city to render itself generally liable upon its contract for special improvements.

3. The scheme of the statute is to enable a city to make special improvements upon its streets, and to reimburse itself for the cost of the same through special assessments of property abutting upon and benefited by the improvements, to the extent of assessments made, and this without cost to the general taxpayer.

4. The city of Fargo contracted for the paving of Front street, and stipulated therein to pay for the work by city warrants drawn on account of the contract, and thereafter, in payment, delivered to the contractors, and they accepted warrants directing the payment of the specified amounts "out of the Front street paving funds in the treasury not otherwise appropriated for account contract paving Front street." The city imposed upon itself by such

*Rehearing denied September 8, 1903.

Digitized by Google

transaction the duty of making and collecting the assessments for creating the fund out of which such warrants could be paid, and of paying such warrants without unnecessary delay; and a diversion of such moneys, when collected, to any other purpose than the payment of the warrants drawn against the fund, was a breach of contract, for which the city could be held liable in damages.

5. In an action against a city to recover against it generally because it has diverted from the purposes of its creation moneys realized by assessments for a special fund against which plaintiff's warrants were drawn, it was sufficient for plaintiff to prove his warrants, and that the special fund was created by the city; that there was credited to this fund an amount sufficient to pay his warrants and all other warrants drawn against it; and that his warrants were presented and demand made for payment, and that they were unpaid. The burden was then shifted to the city to show what, if any, of the credits to the fund were improperly made, or otherwise to overcome the prima facie case of diversion made by plaintiff.

6. The presumption is that public officers do as the law and their duty require them.

7. Where an act is done by a public functionary in the discharge of official duty, which can be done only after the performance of some prior act, proof of the later carries with it a presumption of the due performance of the prior act, and this though the prior act is required of the corporation of which he is an officer.

8. Section 2183, Rev. Codes 1895, requiring all moneys received on special assessments to be held by the treasurer as a special fund to be applied to the payment of the improvement for which the assessment was made, and directing that such moneys shall be used for no other purpose, does not prevent a city, when it has advanced money to pay for a special improvement, to reimburse itself later out of the special improvement fund.

9. A general objection to any and all evidence under the complaint, on the ground that it does not state a cause of action, without pointing out any particulars wherein the pleading is considered insufficient, will not be considered.

10. A motion for judgment notwithstanding the verdict tests the sufficiency of the evidence to sustain the verdict rendered, and a new trial will not be awarded or errors considered which can only be remedied by new trial, when the moving party failed to unite with his motion for judgment non obstante a request for the alternative of a new trial.

(Syllabus by the Court.)

Appeal from District Court, Cass County; Pollock, Judge.

Action by the Pine Tree Lumber Company against the city of Fargo to recover on certain city warrants. Plaintiff had judgment, and defendant appeals. Affirmed.

Action upon warrants (10 in number) drawn against city paving accounts by the city of Fargo. Plaintiff holds the warrants as transferee of the original paving contractors. The city of Fargo in July and August, 1895, entered into contracts for the paving of Front street and Northern Pacific avenue, in said city. Each contract provided that the payment should be by city warrants issued in behalf of the contract, to be accepted at par value. The warrants in suit, drawn under the Front street contract, directed each its payment "out of Front street paving f in the treasury not otherwise appropri for account of contract paving Front str The warrant issued against the Nort Pacific avenue fund was in the same f except that the name of the avenue is stituted for that of Front street. These rants were issued and delivered in fu ment of the contracts, and on Octobe 1895, were severally presented to the treasurer for payment, registered by him, indorsed, "Not paid for want of funds," they are still unpaid. In pursuance o duty under these contracts, the proper off of appellant opened two accounts on books, known as "Front Street Paving count" and "Northern Pacific Avenue Pa Account," respectively. It is admitted special assessments were made to pay these improvements, that all proceeding quired by statute were duly and regu taken, and that the assessments were time to time collected. Delinquent as ments were certified to the proper author for collection, and collections made. 327.40 was credited by the city treasure the Front street paving account, and th tal amount of warrants drawn against account was $19,277.44. Of this, $1,0 represents the warrants in suit. The t urer's books show a total credit to Nort Pacific avenue paving account of $17,16 The total amount of warrants drawn ag this account was $14,355.99. Of this, represents the warrant in suit. Of the 327.40 credited to the Front street acc $4,217.54 shows upon the books as "ap priated from street and bridge fund," $2,411.89 as "transferred from North Br way fund." Of the total credit to the N ern Pacific avenue paving account, $3,14 shows upon the books as "appropriated f street and bridge fund." On November 1895, the delinquent assessments for Front street paving were certified to county auditor for collection, and amou at that time to $4,029.45. Of this there collected and remitted to the city treas $3,424.59. On November 29, 1895, the d quent assessment roll for Northern Pa avenue was certified to the county aud for collection. The amount of unpaid ass ments for this fund at that time was 550.17, and thereafter there was collected remitted to the city treasurer, with accu lated penalties and interest, the sum of 206.45. At the time of the trial there $219.17 in the Northern Pacific avenue ing account, and there was no money in Front street paving account. No part of interest or penalty upon these assessm was credited to the special accounts, the city officers credited all the penalty interest collected into the general fund. the complaint each warrant is the sub of a separate cause of action, but a sync of one will illustrate the issues tendere to all, because of the similarity in the f

¶ 9. See Pleading, vol. 39, Cent. Dig. § 1436.

Digitized by Google

of averment. It alleges the incorporation of the plaintiff and defendant; the issuance and delivery of the described warrant pursuant to the contract referred to made with McDonald & O'Neil; the presentation for payment; its registration; that it was indorsed, "Not paid for want of funds;" its sale and transfer to plaintiff; that it has not been paid; and that the paving fund has not been otherwise appropriated—and concludes as follows: "Plaintiff further alleges, upon information and belief, that the defendant, for the purpose of paying said warrant, undertook, promised, and agreed with the said McDonald & O'Neil, and their assigns, at the time of issuing said warrants, to cause the amount of money necessary to pay said warrants to be assessed, levied, and collected as a special tax upon the abutting real property benefited by said paving contract, and the paving laid thereunder, and that thereafter the defendant caused such special tax to be levied and assessed, and that defendant collected therefrom, for the Front street paving funds aforesaid, an amount of money sufficient to pay all the warrants issued on such funds, with interest thereon, including the warrant hereinbefore described, and that such money applicable to the payment of such warrants is now in such funds, and that, if sufficient of said money so collected and applicable for the payment of such warrants is not in such funds, it is because it has been wrongfully and unlawfully diverted therefrom and misapplied by the defendant, without the knowledge or consent of the plaintiff, or any other of the owners of said warrant or warrants; that, if any portion of the amount so levied and assessed remains uncollected, it is because of the negligence of the defendant city, and without the knowledge of, or fault on the part of, the plaintiff, or any of the prior owners of such warrant or warrants." The plaintiff prays a money judgment for the face of the warrant and interest. The answer is a general denial. At the conclusion of the testimony each party moved for a directed verdict. Plaintiff's motion was granted, and a verdict directed for the full amount claimed. Defendant's motion for judgment notwithstanding the verdict was denied. Judgment was entered for plaintiff, and defendant appeals.

M. A. Hildreth, for appellant. Benton, Lovell & Holt, for respondent.

COCHRANE, J. (after stating the facts). Respondent's theory of his right to a recovery appears from the section of his complaint above quoted—in effect, that the city has received into each of these special funds an amount sufficient to pay all warrants issued against them, respectively, including the ones in suit; that, if it has not funds in the accounts, it has misappropriated them, leaving plaintiff without remedy other than this to recover against the city generally.

The paving of its streets was a municipal improvement contracted for by the city, and, when completed, of general utility. Unless there is something in the general incorporation act or general statutes which otherwise directs, or by necessary implication limits the right of a city to become generally liable upon its contracts for this class of improvements, or something in the contract with the city by which the claimant is limited in his recovery to the special funds to be raised from the assessment of abutting property, we can see no reason why the city cannot be held generally liable for debts it has thus contracted. The city council, at the time this indebtedness was incurred, had power to alter, extend, grade, pave, and improve streets (subdivision 7, § 2148, Rev. Codes 1895) to make contracts therefor, and to provide for paying the expense thereof. Argenti v. City, 16 Cal. 263. It was authorized to contract for the payment of such improvements out of the general funds of the city. Soule v. City (Wash.) 33 Pac. 384, 1080; Stephens v. City (Wash.) 39 Pac. 266; Clark v. City, 19 Iowa, 221, 87 Am. Dec. 423. In such event, it was required to make an appropriation for the expense of the same before entering into a contract therefor. Sections 2262–2264, Rev. Codes 1895; Engstad v. Dinnie, 8 N. D. 1, 76 N. W. 292; Roberts v. Fargo, 10 N. D. 231, 86 N. W. 726; City of Fargo v. Keeney (N. D.) 92 N. W. 836. It was also authorized to provide for the expense of making such improvements by special assessments upon adjoining property or property benefited thereby. Section 2265, Rev. Codes 1895. And this method of defraying the expense of paving Front street and Northern Pacific avenue was pursued by the city.

No question is raised in this case as to the legality of the proceedings leading up to and including the assessments of the adjoining property, or for the collection of the special assessments. On the contrary, it is expressly admitted by counsel for the appellant that there was ample power in the city to make the assessments, that they were in fact made and collected from time to time, that delinquent assessments were certified to the proper authorities for collection, and that collections were diligently made. The case was presented on both sides upon the theory that the statutory requirements as to the making of the improvements, through the instrumentality of special assessments of benefited property, have been in all respects complied with, down to the time this suit was commenced.

The following summary of the sections of the general incorporation act, so far as applicable, will make manifest the basis of contention in this case, and the reasons for their solution. Reference is made in each instance to the Revised Codes of 1895. Power to make assessments for local improvements on property adjoining or benefited thereby is vested in the city council; als-

Digitized by Google

power to collect the same, and to fix, determine, and collect penalties for nonpayment of any special assessment and taxes. Section 2265, Rev. Codes 1895. When the council deemed it necessary to grade, pave, or otherwise improve any street within the city limits, for which a special assessment was to be levied, it was required, by resolution, to declare such work necessary to be done, and to cause such resolution to be published in the official newspaper of the city once a week for four consecutive weeks, and, in the absence of a written protest by a majority of the property owners affected, the city council "shall have power to cause such improvement to be made and to contract therefor, and to levy and collect the assessment as hereinafter provided, and all work done under this section shall be let by contract to the lowest responsible bidder therefor." Section 2279, Rev. Codes 1895. By section 2280 it is provided that when the work has been determined upon, and the contract let, the city engineer shall calculate the amount of the assessment for each lot or parcel of ground abutting or bounding upon such improvement; and in making his estimate he was required to divide the entire cost of the improvement by the number of feet fronting or abutting upon the same, the quotient to be the sum to be assessed per front foot so abutting. It provides for the filing and approval of such estimate, and for the giving of notice and time and place of its approval. Section 2288 required an assessment roll to be made up, and prescribed what it should contain—this to be filed with the city treasurer—and required the city treasurer to publish this list for three weeks, with a notice that the assessments would become delinquent if not paid within 30 days after the date of the first publication, and that a penalty of 10 per cent. would be added thereto after they became delinquent. By section 2287 it was provided that all assessments should draw interest after delinquency at the same rate as general taxes under the laws of the state, and it required the city treasurer to collect the assessments by distraint of personal property, or, if it could not be made by distress, then by sale of the real property assessed. Sections 2295 to 2302 provided for time, place, and manner of selling the property assessed for delinquent special taxes, the redemption from such sales, and the giving of deed when not redeemed. Sections 2308 to 2310 gave the city council power to issue bonds of the city, to be known as "Internal Improvement Bonds," the proceeds from the sale of the bonds to be kept as a special fund, separate from other funds of the city, and to be used exclusively for the payment for work done and material furnished in the making of the special improvement, and provided that no more of the fund should be used than the amount of the special assessment, and that all assessments, penalties, and interest should be credited to the fund as fast as collected, and shoul main a part of the same. It was pro by section 2311 that all contracts and of the city, under these sections of the ute, should be signed by the mayor and tersigned by the auditor, with the seal o city affixed.

As between the city and the parties whom it contracted to furnish the labo material and to pave its streets, the had power to render itself generally notwithstanding the cost of the improve was to fall ultimately upon the owne abutting property. The scheme of the ute was to enable the city to make th provements enumerated in the statute to reimburse itself for the costs of the through special assessments of property ting upon, and theoretically, at least, be ed, to the extent of the assessments, b improvements made. This scheme, if fully carried out, would avoid complic as to constitutional debt limits, and pl within the power of the city to collec assessments in time to meet its contra ligations within the time agreed, and wi borrowing from its general funds. Th bility of the property holders for thes sessments is to the city exclusively. assessments are levied and collected b city, and the money, when collected, into the city treasury. The contractor in privity with the property owners, has no means of enforcing collection a them. He looks alone to the city. Th nothing in the statute which imposes the person to whom the contract is pave the streets the requirement to alone to the proceeds of the special a ments for his pay, or limiting his rec to the funds realized therefrom. On th trary, the fact that the city may bon the payment of the indebtedness, the not to exceed in amount the aggrega the special assessment, and the funds re from the assessments, including prin penalties, and interest, to be kept in a cial fund for their retirement, shows as to the contractor, the city may r itself generally liable, all the time lo to the special fund for its indemnity. has been the construction of charters o same general phraseology and purpose Meech v. City, 29 N. Y. 212, it was that where a municipal corporation wa powered to make a public improvemen expense of which was to be borne, n the whole city, but by the real estate o benefited by it, the corporation to d work, and the expense thereof to be mately assessed upon the property ben the corporation, by its proper officers, either do the work itself, or contract f ing it. In the case of a contract, wher work was performed, the contractor look to the city alone for payment; an corporation, if the contract price was from the general fund, could reimburse

Digitized by Google

and such fund out of the assessments made. In Cumming v. Brooklyn, 11 Paige, 596—an action in equity to recover the contract price for grading the streets—it was adjudged that the city, having the general power of a corporation, was competent to enter into a contract with the complainants to grade the street, and to pay them for so doing. The charter gave general authority to the common council to cause the streets to be graded and paved, and there was nothing in the charter which prohibited the corporation from entering into general contracts for the making of such improvements. The court said: "It is true that the section of the charter which authorized these improvements to be made directs the expense thereof to be assessed upon the owners and occupants of the lands and premises benefited thereby, in proportion to the amount of such benefit. The assessment of the expense as a local tax is not, however, a restriction upon the power of the corporation, so as to require it to contract only for payments out of that particular fund. But this local tax is a fund which has been provided by the Legislature to reimburse the corporation for the expense of an improvement which it has either paid or become liable to pay. And if the corporation, voluntarily or by compulsion, pays such expenses out of its general fund, any citizen who pays taxes may apply to the proper tribunal to compel the corporation to cause the general fund to be reimbursed by an assessment and collection of the expense of such improvement from the owners of the property benefited, or out of the property itself, as authorized and directed by the charter." In Hitchcock v. Galveston, 96 U. S. 341, 24 L. Ed. 661, the city council, by its charter, was given power to grade, pave, and improve streets, the cost to be defrayed by the owners of lots fronting on the improvement. The court said: "The city is authorized to construct sidewalks, and, though the cost of construction is to be defrayed by the abutting lot owners, the city is to collect from them the cost. * * * The resort to the lot owners is to be after the work has been done, after the expense has been incurred, and it is to be for the reimbursement of the city." In Heller v. City (Kan.) 48 Pac. 842, the power to plant shade trees upon the streets was expressly given, and it was provided that assessments should be levied against abutting property to pay for such improvements. It was held, however, that the city was primarily liable to those with whom it contracted to make them, reimbursing itself later by a special assessment against the abutting property. The same court, in City v. Trigg, 47 Pac. 524, used the following language: "While the statute provides for assessing the cost of the improvement against the property benefited, the city is not limited to that method of making payment. It has been determined that this provision requiring an assessment to be made for the improvements relates to the ultimate liability therefor, and is for the purpose of raising a fund to reimburse the city for the amount paid for such improvements."

The cases cited to support these conclusions disclose a harmony of judicial sentiment upon this point, viz., that the city had power to render itself generally liable upon its contract for paving its streets. Clark v. Des Moines, 19 Iowa, 221, 87 Am. Dec. 423; City v. Leu (Kan.) 29 Pac. 467; City v. Leatherman (Ky.) 35 S. W. 625; Fisher v. City, 44 Mo. 482; Barber, etc., Paving Co. v. City, 72 Fed. 336, 19 C. C. A. 139; Barber, etc., Paving Co. v. City, 64 Fed. 283, 12 C. C. A. 100, 29 L. R. A. 401; Northern Pacific L. & M. Co. v. City, 14 Or. 3, 12 Pac. 4; Commercial Nat. Bank v. City, 24 Or. 188, 33 Pac. 532, 41 Am. St. Rep. 854; District of Columbia v. Lyon, 161 U. S. 200, 16 Sup. Ct. 450, 40 L. Ed. 670; Cole v. City (La.) 6 South. 688; State v. Commissioners, 37 Ohio St. 530; Ft. Dodge, etc., Co. v. Ft. Dodge (Iowa) 89 N. W. 10.

It is urged that the city could not make a contract which would impose, under any contingency, the payment of money from its treasury, realized from general taxation, unless such expenditure was first provided for in the annual appropriation bill; that, if the city could render itself generally liable upon a contract for paving, it could only do so after making the preliminary appropriation. The city as we have seen, is provided with the means of fully protecting itself against expense in the making of special improvements. Any payments made upon its contracts for paving should be paid for out of the funds realized from the special assessments; and, if the city exercise the powers given it, the general taxpayer cannot be burdened at all with the cost of the improvement. If, however, the city council fails to take advantage of the means provided to realize upon special assessments the cost of the improvement, as between the city it represents and the contractor, the consequences of the neglect should fall upon the city. At the time of making the contract for paving, it was not contemplated that the expense would be paid out of the general revenues of the city. This was not an expense or liability of the corporation, within the meaning of section 2262, Rev. Codes 1895, which had to be provided for in the annual appropriation bill, or to be defrayed therefrom. This is made apparent by the exception in the concluding sentence of section 2264, Rev. Codes 1895, which section reads: "No contract shall be made by the city council and no expense shall be incurred by any officers or departments of the corporation, whether the object of the expenditures shall have been ordered by the city council or not, unless an appropriation shall have been previously made concerning such expense, except as herein otherwise expressly provided." Following this exception are the sections pro-

Digitized by Google

viding for local improvements and contracts therefor, and special assessments for their cost, the substance of the pertinent portions of which are hereinbefore quoted. In the language of Judge Sanborn: "The conclusion is irresistibly forced upon our minds by this review of the provisions of this charter that this and like contracts for grading and paving streets that were not a part of the current expenses of the city, and were not to be paid for by the general tax levy, but through the expenditure of the funds authorized to be raised by special assessment, are expressly excepted from the restrictions and prohibitions of [section 2264] by the last clause of that section." Barber Asphalt Paving Co. v. City, 19 C. C. A. 147, 72 Fed. 344. We conclude that the city had power to render itself generally liable upon its contract for paving.

The city, in this case, did not take advantage of sections 2308 to 2310, Rev. Codes 1895, and did not issue internal improvement bonds, but, on the contrary, issued to the contractors, in payment for their work and material, warrants in the form of the ones in suit; and it is now insisted that, by the acceptance of these warrants in payment, the contractors and their transferees assented that all right of recovery thereon should be, and that it is, limited to the funds named in the particular warrants, and against which they were drawn, and that plaintiff can only recover by showing money in these funds realized from special assessments not otherwise appropriated. The stipulation in the contract "that all payments made by the party of the second part shall be made by city warrants to be issued on behalf of this contract and shall be accepted by the parties of the first part at par value" in no way binds the contractors to look exclusively to a fund realized from special assessments for their pay. The stipulation to take city warrants at par would indicate, at most, that there might be some delay in realizing upon them. When the warrants were accepted by the contractors, directing payment out of Front street paving funds in the treasury not otherwise appropriated, for account contract paving Front street, and similar orders for their work on Northern Pacific avenue, drawn on Northern Pacific avenue paving funds, they had a right to assume that the reference in the warrants to particular funds was for the convenience of the officers handling the funds and keeping account thereof, and not as varying or limiting the city's liability upon its contract with them. Clark v. City, 19 Iowa, 222, 87 Am. Dec. 423. The city had received full performance of the contract, and was enjoying the fruits of it, and could not claim at such time that the acceptance of the warrants constituted a new contract, or relieved it from any antecedent liability it had subjected itself to. The contractors had knowledge of the statute authorizing special assessments, and, doubtless, in accepting the warrants drawn in this form, sought to obtain the added assurance of payment which an assignment of thus fund would give.

We will assume, for the purposes of this case, that the contract for paving, and the language of the city warrants delivered in fulfillment of it, were understood by the parties, and were intended to postpone the redemption of the warrants until the special assessments could be made and collected. It follows from this assumption that the issuance and delivery of the warrants operated as an assignment of so much of these funds as was necessary to retire them. Swanson v. City (Iowa) 91 N. W. 1052, 59 L. R. A. 620; Ft. Dodge, etc., Co. v. City (Iowa) 89 N. W. 11. Immediately and as fast as moneys were covered into the particular funds from these special assessments, the warrant holders became entitled to them, in the order of the presentation of the warrants, and until the moneys were in fact paid out in retirement of the warrants the city held them as trustee for the warrant holder. The contractors, by accepting warrants payable out of these special funds, had a right to rely upon the city's performing with all expedition the acts necessary to create the fund out of which the warrants would be retired. The contract duty of the city, under the construction we have assumed, was not only to make proper assessments, but to put in operation the proper machinery to collect these assessments, and to see that the money was actually collected within a reasonable time after the issuance of the warrants; that such moneys, when collected, should be held in the special funds, and paid out only upon the warrants issued against these funds; and that the moneys would not be diverted to any other purpose. Commercial Nat. Bank v. Portland (Or.) 33 Pac. 532; Northern Pacific, etc., Co. v. Portland (Or.) 12 Pac. 4; Reilly v. City, 112 N. Y. 42, 19 N. E. 508; Cumming v. Mayor, 11 Paige, 596; Barber v. City, 64 Fed. 283, 12 C. C. A. 100, 29 L. R. A. 401; Allen v. City (Iowa) 77 N. W. 532, 539. If this duty had been fully performed by the city, this action never would have been commenced or made necessary.

As to the $500 warrant in suit, drawn against the Northern Pacific avenue paving account, the evidence shows that the city did not fulfill its obligations hereinbefore pointed out. It was stipulated that all proceedings for the imposition of special assessments for Northern Pacific Avenue Paving were regularly taken. The contract for paving was entered into before the cost was apportioned against the properties. Section 2280, Rev. Codes 1895. The assessment was for a sum sufficient to pay all warrants issued under the contract, and all other costs of the improvements. The evidence discloses that on November 29, 1895, the assessments unpaid amounted to $2,550.17. These were certified to the county auditor for collection.

Digitized by Google

This amount, with penalty and interest, was collected, and there was remitted to the city treasurer $3,206.45. There was but $219.17 in this fund when suit was commenced. This shows a diversion of this fund by the city, and, as to the warrant in suit, to hold that the city is not liable would be equivalent to saying that it could violate its contract with impunity, and at the same time retain its fruits. Such is not the law. Substantially the same condition is shown as to the Front street paving account. On November 26, 1895, the delinquent assessments certified to the county auditor amounted to $4,029.45. All the balance of these assessments must have been paid before that time. Of this there was collected and remitted to the city treasurer $3,424.59. The date of this remittance is not shown. The small balance of this fund uncollected should have been realized by a sale of the properties against which the assessment was made, and this within a year after delinquency Section 2295, Rev. Codes 1895. If any portion of these assessments remained unpaid, this fact and the amount uncollected could have been shown, and by the defendant city. The evidence and appellant's admissions disclose that the duty to collect had been imposed upon and undertaken by the city, and the presumption, if any arises from such showing, is that the duty has been performed. Subdivision 15, § 5713c, Rev. Codes 1899; 22 Am. & Eng. Enc. Law, 1267.

But the proofs do not stop here. It appears that the treasurer credited into the Front street paving account and the Northern Pacific avenue paving account, respectively, the sums realized from the special assessments. The assessments payable into each account were required to be, and in fact were, in amounts sufficient to pay all warrants issued against the fund to be created by them. The officer having custody of the city's money, and upon whom rested the duty of keeping these accounts, disclosed a credit in each of them of an amount more than sufficient to pay all warrants drawn against them, including the ones in suit. These credits are not out of proportion to the gross amount of the special assessments. The presumption is that the treasurer performed his legal duty, and credited into these accounts moneys primarily received in payment or satisfaction of the assessments made for the benefit of these funds. Delaney v. Schuette (Wis.) 5 N. W. 796; Nofire v. United States, 164 U. S. 657, 17 Sup. Ct. 212, 41 L. Ed. 588; U. S. Bank v. Dandridge, 12 Wheat. 64, 6 L. Ed. 552; Rankin v. Hoyt, 4 How. 324, 11 L. Ed. 996; Huey v. Van Wie, 23 Wis. 613; Floyd v. Day, 19 Ind. 450.

When plaintiff had gone thus far with its proofs, and shown that each of the funds against which the warrants in suit were drawn had been credited with a sum sufficient with which to pay its warrants and all others drawn against the funds, respectively, a prima facie case was made out. Hockaday v. Commissioners (Colo. App.) 29 Pac. 290. The plaintiff became immediately entitled to the moneys assigned to him by the warrants, and the city had no right to divert them elsewhere or to any other purpose. The evidence that there was no money in either fund, excepting $219.17 in the Northern Pacific avenue account, showed a diversion of the money in said accounts from the purposes of their creation, and a conversion of plaintiff's money in violation of trust, rendering the city liable. Potter v. City (Wash.) 56 Pac. 394; Hockaday v. Commissioners (Colo. App.) 29 Pac. 291; City v. Leu (Kan.) 29 Pac. 467; Commercial Nat. Bank v. City (Or.) 33 Pac. 532; Frush v. City, 6 Or. 281; Northern Pacific Lumber Co. v. City (Or.) 12 Pac. 4; Valleau v. Newton Co., 72 Mo. 593; Id., 81 Mo. 591; Chaffee v. Granger, 6 Mich. 51; Lansing v. Van Gorder, 24 Mich. 456; Eilert v. Oshkosh, 14 Wis. 637; Hohl v. Town, 33 Wis. 324; 21 Am. & Eng. Enc. L. 23. The case is analogous to those where a city had agreed to pay out of a fund to be raised by special assessment, and then, by negligence of its officers or some defect in legislation, the fund was not realized after the city had reaped the benefit of its contract and obtained the improvement contracted for. Reilly v. City, 112 N. Y. 30, 19 N. E. 508; Ft. Dodge, etc., Co. v. City (Iowa) 89 N. W. 7, 11; Stevens v. City (Wash.) 39 Pac. 266; Denny v. City, 79 Fed. 720, 25 C. C. A. 164; Stevens v. City (Wash.) 44 Pac. 541; McEwan v. City (Wash.) 47 Pac. 433; Eidemiller v. City (Wash.) 44 Pac. 877; Cumming v. Brooklyn, 11 Paige, 599; Baldwin v. Oswego, 1 Abb. Dec. 62; Smith v. Buffalo, 44 Hun, 156; Wilder v. City, 87 Fed. 843, 31 C. C. A. 249; Warner v. City, 167 U. S. 467, 17 Sup. Ct. 892, 42 L. Ed. 239; Barber, etc., Co. v. Denver, 72 Fed. 339, 19 C. C. A. 139; Barber, etc., Co. v. Harrisburg, 64 Fed. 283, 12 C. C. A. 100, 29 L. R. A. 401; Bucroft v. City, 63 Iowa, 646, 19 N. W. 807; Hitchcock v. Galveston, 96 U. S. 350, 24 L. R. A. 659; Scofield v. City, 68 Iowa, 695, 28 N. W. 20; Bill v. City (C. C.) 29 Fed. 344; City of Chicago v. People, 56 Ill. 327; Maher v. City, 38 Ill. 266; Fisher v. City, 44 Mo. 482; Portland, etc., Co. v. City (Or.) 22 Pac. 542; Allen v. City, 35 Wis. 403; Eilert v. City, 14 Wis. 637. In such cases the city is liable, notwithstanding the contract under which the warrant issued expressly stipulated that the holder could not call upon the city to redeem, but should be limited in his recovery to the special fund against which the warrant was issued. Barber, etc., Co. v. Denver, 72 Fed. 36, 19 C. C. A. 139; Barber, etc., Co. v. Harrisburg, 64 Fed. 283, 12 C. C. A. 100, 29 L. R. A. 401; Bank v. Portland (Or.) 33 Pac. 532; City v. People, 56 Ill. 334. The case of Redmon v. Chacey, 7 N. D. 234, 73 N. W. 1081, is not an authority opposed to this conclusion. The facts distinguish it. The warrants there were required, by the law authorizing their

Digitized by Google

issue, to be drawn against the special fund, and the warrants were not drawn by the county commissioners, who alone have authority to bind the county generally in such matters. The very point we have here illustrated is that the general incorporation act did not require these contractors to be paid by warrants drawn against the paving fund, or out of the paving fund at all; and the city council, who made the contract for paving, had power thereby to bind the city generally for this, among other reasons, that the law did not limit their authority in drawing warrants to the contractors to restrict their payment out of the special fund. The contract with plaintiff's assignors, though made, as all corporate contracts must be, through the agency of the city council, yet, was, when made, the contract of the city. Lansing v. Van Gorder, 24 Mich. 456. When the paving contractors, therefore, accepted warrants drawn against the paving fund, there was no statutory requirement that they should be limited to this fund, in all events, for their pay. But in so far as they were so limited, it was by the contract and acceptance of these warrants, so worded, in fulfillment thereof, and in reliance upon the implied promise of the city to promptly take the needed steps to create the fund out of which they were to be paid.

The city cannot, more than a private individual, take advantage of its own wrong to escape a contract obligation. The distinction made by this court in Redmon v. Chacey, when it declared the warrants there considered as not county obligations, because issued, "not by the county commissioners, but by the drain commissioners—a board whose authority in that line is limited to dealing with the drainage fund, and that cannot bind the county generally"—is well illustrated by Judge Cooley in Lansing v. Van Gorder, supra, when he said: "It is contended on the part of the city that in respect to such local improvements, and the assessments to pay for the same, the common council did not act for the whole city, but as agents, on the one side, for the owners of the property benefited, in making the contract for the work, and supervising its construction, and on the other for the contractor, in levying, collecting, and paying over the assessment; and if the common council are guilty of any wrong to their principals, or any misappropriation of moneys, the city cannot be held liable therefor. We think this argument wholly mistakes the position of the council. The council is the legislative body of the city, and it is acting as such not less when levying a special assessment than when imposing the ordinary taxes. The improvement does not belong to the parties assessed, but to the public at large, and it is made from considerations of the general benefit. The cost is levied upon the adjacent property because such property receives the larger portion of the benefit from enhanced values, and therefore is thought to embrace the proper limits for an asses district; but if the whole city had been such district, the character of the wo use and proprietorship, so far as ther be said to be any, would have been the as now. So far as the owners of the taxed from being principals of the c which taxes it, that they are not even su to decide for themselves that they will the improvement; but the council, look the needs of the whole city, orders i then imposes the cost upon a few, thou advantages of the street are received The few thus taxed may well deny the cy of those who are first set over them votes of all, and who then tax them f benefit of all. When the parties as have paid the tax levied upon them, have performed their whole duty, an charged their entire liability. The dut devolves upon the city, through its co council, to see that the money is proper plied."

It is contended by appellant that, in ing proof of the book entries credited Front street paving fund, $4,217.54 t appears as "appropriated from stree bridge fund," $2,411.89 as "transferred North Broadway fund," and in the cr the Northern Pacific avenue account item of $3,144.82, "appropriated from and bridge fund"; that the form in these entries appear upon the books tives the idea that these sums could pr or legally be credited to these speci counts, and negatives the idea that sums were realized from the special a ments for the paving of these streets; this evidence, having come in as p plaintiff's showing, relieves the city burden of proving that all the assess were not collected; and that without credits the funds would not be suffici pay all warrants drawn against them. also claimed that under section 2183, Codes 1895, all moneys received on an cial assessment must be held by the tre as a special fund, to be applied to th ment of the improvement for which t sessment was made, and that such can be used for no other purpose; tha ing this statute effect, there was no aut in law, and none was in fact shown, wh the treasurer could divert $2,411.89 fro North Broadway paving fund to the street paving fund; and that the credi pearing as appropriations from stree bridge fund cannot be considered, be under sections 2262, 2263, Rev. Codes 18 interpreted by this court in Engstad v. nie, 8 N. D. 1, 76 N. W. 292, no appropr by the city council is shown, nor any a ity in the council to make such appropri

Appellant's assignments of error upon points are not well taken. These am are shown as credited into the speci counts. The treasurer, in the perfor of his official duty, has so credited then

Digitized by Google

explanation is offered as to the language in which the items are credited to this fund. The aggregate credited as "appropriations from bridge and street fund" is made up of many entries. From month to month, during the period of collection of these assessments, items are credited to these accounts in the language, "appropriation from bridge and street fund." ranging in amounts from $5.20 to $1,816.19. The fact that the credits to these paving funds appear on the books in this language does not negative the idea that the amounts were properly credited into these special accounts, or that they were not primarily received from the special assessments upon the property abutting upon Front street or Northern Pacific avenue. The moneys collected by the city treasurer from time to time, and from various sources, may have been carried, for his own convenience, in the account designated as "Bridge and Street Fund," and then, at stated intervals, the amounts belonging to the various funds credited to them as appropriations from bridge and street fund, thus indicating, under the method of bookkeeping, how the amounts collected could be traced on the books to their original sources. But it is idle to speculate upon this point. If these amounts so credited to the special accounts were improperly credited, it was the duty of the city to show it. The plaintiff had shown by the books of the treasurer a credit to these funds amply sufficient to pay his warrants. This credit was made up of items entered by the treasurer at intervals over a long period of time. The funds in which these credits were shown were created and maintained for the sole purpose of keeping accounts of money received and disbursed from the assessments which brought them into existence. No reason can be assigned for moneys being credited into these accounts which were not primarily received from assessments of the property in the improvement district after which they were named. But on appellant's assumption that these moneys were appropriated from moneys raised through general taxation, it was not necessary for plaintiff to show that an appropriation from the bridge fund was made by the city council, or that it had authority to make such appropriation as he contends. The fact that the transfers were made by the city treasurer while acting in the discharge of official duty raised the presumption that they were legally made in pursuance of authority. Lawston, Presumptive Ev. 60, 67. And if an appropriation by the city council was necessary as a preliminary to such transfer of funds from one account to the other, the fact that the transfer was officially made by the custodian would give rise to the presumption that the necessary action of the city council had been taken, and would cast the burden of proof on the one disputing the legality of the transfer. Bofire v. United States, 164 U. S. 657, 17 Sup. Ct. 213, 41 L. Ed. 588; United States Bank v. Dandridge, 12 Wheat. 64, 6 L. Ed. 552; Delaney v. Schuette, 49 Wis. 366, 5 N. W. 796; Barber, etc., Co. v. Denver, 72 Fed. 341, 19 C. C. A. 139; Knox County v. Bank, 147 U. S. 91, 13 Sup. Ct. 267, 37 L. Ed. 93.

The answer of the city in this case was a general denial. The proofs disclose that for seven years the warrants in suit have remained unpaid. No claim is made that the contractors failed in any particular to perform their contract. The proof shows compliance upon their part. The city has profited by the labor, material furnished, and improvement made, while the very time that has been permitted to elapse since the issuance of the warrants in suit is a breach of the city's contract to create a fund for the retirement of the warrants, and to retire them without delay. If, then, any moneys credited to either of these funds were improperly so credited—if the sufficient amount to retire these warrants once in these accounts was not improperly diverted to other purposes—it was within the power of the city, and it was its duty, to so show. Hockaday v. Commissioners (Colo. App.) 29 Pac. 291. If general funds of the city were put into these special accounts without authority of the council, or if the council lacked authority to make such appropriations, these facts were peculiarly within the knowledge of the defendant, and are new matter which should have been affirmatively pleaded by the city in its answer. Nash v. St. Paul, 11 Minn. 174 (Gil. 110); Barber, etc., Co. v. Denver, 72 Fed. 341, 19 C. C. A. 139.

Nor is the appellant's assignment as to the credit from the North Broadway fund on any better foundation. Section 2183, Rev. Codes 1895, prevents the use of special funds for a purpose outside that of their creation. But a city is permitted to contract for the payment of special improvements from money in its treasury, relying for its reimbursement upon the special taxes when collected. Under this method of paying for improvements, the city controls and owns the moneys collected from the special assessments, and can apply them to any general account of the city without violating the mandate of section 2183, Rev. Codes 1895. The object and purpose of the statute is fulfilled when the cost of the improvement is paid for by the property benefited by it, and the special fund is as much devoted to the accomplishment of this purpose when taken by the city in payment of moneys already advanced by it on the improvement as if the assessment fund were paid directly to the contractor.

The city offered no evidence to show under what arrangement or how the sum of $2,411.89 happened to be in the North Broadway paving fund, or the occasion for its being transferred to the Front street paving fund. It does appear that all warrants issued against the North Broadway paving fund had been paid; that these moneys were not needed in that account. The purpose of the

Digitized by Google

statute in preventing these moneys being used for other than North Broadway paving had been accomplished. This balance may have been in the fund because of penalties and interest collected on delayed payments. It may have represented moneys advanced by the city from its general funds to pay upon the contracts for improvement of North Broadway. It may have represented moneys that had been borrowed temporarily from the Front street paving fund for the use of North Broadway fund. However the balance came to be there, the same presumptions arise from the fact of its transfer into the Front street account, and that it was legally and rightfully transferred, as are indulged in favor of the entries concerning appropriations from the bridge and street fund. If this sum was an unlawful credit, it was for the city to so show, and not to leave the matter to rest simply on the presumptions to which the entries give rise.

Appellant insists that there was no evidence in the case showing or tending to show a diversion or misapplication of funds in these special accounts; that the burden of proof was on plaintiff to show such diversion; that the presumption in favor of a public official performing his legal duty, when indulged in favor of the defendant, would, prima facie, at least, show that the depletion of the fund was a legal and authorized one; that the presumption that moneys were properly credited in these accounts would be offset by the presumption that the absence of funds was legally produced. This argument is well answered by the Supreme Court of Colorado in the Hockaday Case, supra, where it was said: "It is shown that the amount of the credtis to the road fund in the years 1883 to 1886, both inclusive, exceed, in the aggregate, the outstanding warrants and warrants drawn against it, some $19,000, and that in each of the years the available road fund exceeded by quite an amount the warrants drawn; hence, if the fund had been entirely devoted to the purposes of its creation, and there had been no diversion or misapplication of the fund, it was at all times solvent, and with money in the treasury to pay all warrants drawn during the year. * * * No proof whatever was offered on the part of the defense to explain or show to what use the fund had been applied, and why it was not on hand. Prima facie, a case was made, sustaining the allegations in the complaint, that required defendant to rebut. No effort was made to do so. Counsel evidently relied upon the supposed invalidity of the warrants, and did not think it necessary to interpose other defenses. The figures contained in the stipulation showing that there should have been a large balance of the special fund in the treasury,—the same document stipulating that there was none—prima facie, at least, established the allegations of the complaint of diversion and misapplication of the fund to other purposes by the county officials." The money, when credited into this account, was thereby, and by the fact of entry, immediately dedicated to the payment of these warrants. The delivery of the warrants was an equitable assignment of the fund to their holders, and, as against the warrant holders, the moneys could not be retransferred to other accounts or to other purposes, except in violation of the city's contract, evidenced by the warrants. The presumption that the money was legally retransferred to other accounts cannot be indulged, because the owner of the warrants did not consent to an abandonment of its rights thereto, and the presumption cannot be indulged against countervailing proofs.

Appellant has assigned for error 26 rulings of the trial court, which, upon argument, he grouped under three heads. Rulings in the admission of evidence we will not consider in detail in this opinion, for the reason that no motion for a new trial was made in the court below. The evidence, free from legal objection, is sufficient to sustain the verdict, and a consideration of errors which could only be reviewed on motion for a new trial can serve no good purpose; appellant having waived, by the form of his motion, any right to a new trial herein. Bragg v. Ry. Co., 81 Minn. 130, 83 N. W. 511; St. Anthony Falls Bank v. Graham, 67 Minn. 318, 69 N. W. 1077.

Appellant's objection to the introduction of any evidence in the case, for the alleged reason that the complaint did not state facts sufficient to constitute a cause of action, without pointing out in what particular counsel considered it insufficient, was properly overruled. This form of objection has been repeatedly condemned. Bowman v. Eppinger, 1 N. D. 21, 44 N. W. 1000; Chilson v. Bank, 9 N. D. 98, 81 N. W. 33; Schweinber v. Elevator Co., 9 N. D. 113, 81 N. W. 35.

The argument that plaintiff cannot recover in this form of action; that, to recover, it must show money in the special fund applicable to the payment of its warrants; and that mandamus is the remedy in case the treasurer refuses to pay over moneys applicable to the retirement of the warrants—is answered in this: The warrants were city warrants. When the money was collected by the city, plaintiff was entitled to it, and failure to pay it over was a breach of the contract by the city. Neither the law, the contract, nor the warrants limited the right of recovery absolutely and in all events to the special fund; and, even if it did, the city could not convert the fund, and urge this fact in defense of a suit on the warrants. Mandamus is not the remedy in a case where both the law and contract restrict the recovery within the accounts realized on special assessment, when, as in this case, by fault of the city there is no money in the fund to be paid over. Hockaday v. Commissioners (Colo. App.) 29 Pac. 290.

Appellant tried its case upon the theory that plaintiff could not prove a cause of ac-

Digitized by Google

tion. It has rested its rights on appeal upon the proposition that the facts alleged and proven by plaintiff were insufficient to sustain the verdict. By not uniting with its motion for judgment notwithstanding the verdict the request for alternative relief by new trial, it in effect says that it could make no better showing if a new trial was ordered. Bragg v. Ry. Co., 81 Minn. 130, 83 N. W. 511; Ætna Indemnity Co. v. Schroeder (N. D.) 95 N. W. 436; Richmire v. Andrews & Gage (N. D.) 92 N. W. 819.

We find no error in the record. The verdict was properly directed for the plaintiff. The judgment of the district court is in all respects affirmed. All concur.

In re MORAN'S WILL.

(Supreme Court of Wisconsin. May 29, 1903.)

VESTED ESTATES—CONTINGENT REMAINDERS—STATUTORY AND COMMON-LAW DEFINITION—ESTATE IN REMAINDER—WILL—CONSTRUCTION—TESTAMENTARY INTENT—EQUITABLE CONVERSION—TIME FOR DIVISION.

1. The terms "vested estates" and "contingent estates" used in section 2037, Rev. St. 1898, have far different significations than the common-law terms "vested remainders" and "contingent remainders."

2. A vested remainder at the common law is one where there is "some person in esse, known and ascertained, who by the will or deed creating the estate is to take and enjoy the same upon the expiration of the existing particular estate, and whose right to such remainder no contingency can defeat."

3. A vested estate or remainder in the statutory sense is one where there is a person in esse, "who, should the particular estate now cease, would, eo instanti et ipso facto, have an immediate right to the possession," though whether he would ever take in fact might depend upon an uncertain event rendering the interest a contingent remainder, strictly so called, by the common-law rule.

4. While a vested remainder by the rules of the common law is not subject to be divested at all, not so a vested estate in the statutory sense. That may be divested upon condition subsequent in whatever way or manner the creator thereof in creating the same may provide or authorize. Section 2057, Rev. St. 1898.

5. While at common law an estate in remainder cannot be at the same time both vested and contingent, there is that seeming contradiction as to remainders under section 2037, Rev. St. 1898.

6. A person may be so conditioned that he would immediately take in remainder should the precedent estate presently cease, yet may not be so entitled at any future time. The element of certainty, by force of the statute, gives to the remainder the character of a vested estate for the purpose of the subject covered by the statutes. The element of uncertainty gives to the remainder, by the same means, the character of a contingent estate for the same purpose. Neither situation, however, has anything whatever to do with the testamentary right except as hereinafter stated.

7. Whether an estate in remainder created by will is or is not vested in the common-law sense is controlled by the character of the estate actually created, as evidenced by the testamentary intention, not by any law, common or statute.

8. The testamentary intention in any case is to be determined from the will. Rules of construction aid in discovering that in proper cases, but do not control it or prevent its execution, except in the one case of a violation of the prohibition against unduly limiting the absolute power of alienation.

9. There is a rule for the construction of wills that the law favors the vesting of estates in a common-law sense and in a statutory sense as well, as regards the subject of perpetuities, but it is not for use except in solving uncertainties, and the same is true of all other rules for judicial construction as regards wills, the same as regards all other writings.

10. When there is a devise to one, remainder over direct to others, nothing appearing in the will to the contrary, the legal presumption is that the testator intended to create vested estates in remainder in a common law sense: that is, estates indefeasible, descendible and alienable.

11. When an estate is by will carved out of a fee and the remainder is directed to be divided between the members of a class of persons after the expiration of such particular estate, the presumption of a testamentary intention that the estates in remainder shall vest upon the death of the testator is displaced by a presumption, nothing appearing in the will to the contrary, that the testator purposed to create contingent remainders in a common law sense.

12. The rule last above stated applies regardless of the doctrine of equitable conversion, that not being important except as regards the statute on the subject of perpetuities.

13. Words of survivorship in a will, in respect to a devise of property in remainder to be divided between members of a class, are presumed, nothing appearing to the contrary, to refer to the time set for such division.

14. A bequest or devise in remainder for division and distribution at some point of time distant from the death of the testator, in the absence of an indicated purpose otherwise, is to be read as a direction to divide between those persons answering the calls of the class, in being at the time set for division, and that is so regardless of the doctrine of equitable conversion.

15. The devise and bequest of property in the case in hand to the testator's wife, to be divided after her death equally among the testator's children who may survive, "also my sister Julia to have an equal share * * * with my children if she survives the death of my wife," by the intermediate period of enjoyment and indefinite point of time set for division and distribution of the property subsequent to the death of the testator, evinces an intention to postpone the vesting in a common-law sense till the arrival of such time, and to limit the participants to those then in being, of the class designated. The words of survivorship, under the circumstances, evince the same purpose. Such is also the literal sense of the words, and, there being nothing in the law to the contrary, such sense must control.

16. The purpose of the testator being determined as indicated, and not offending against the statute on the subject of perpetuities, whatever the estate in remainder be called, it does not militate against such intention being executed.

17. The estates created, tested by the statutes, are of the nature following:

(a) Estates in expectancy because commencing in the future. Section 2033, Rev. St. 1898.

(b) Future estates, because limited to commence in possession at a future day. Section 2034, Id.

(c) Remainders, transferable as such (section 2035, Id.), subject to be defeated by any condition created or authorized at the time of and in the creating of the same (section 2057, Id.).

(d) Vested estates, because at every instant of time after their establishment by the taking effect of the will, persons were in esse who could be pointed to as those who would take

Digitized by Google

immediately should the particular estate be presently terminated. Section 2037, Id.

(e) Contingent estates, because at no instant of time after the creation of the estates could any one or more of the remaindermen be said to be those who would finally come to the possession of the property.

(f) Estates subject to be defeated as to any one of the remaindermen by his decease prior to the termination of the particular estate, since the testator so provided at the time of the creation of the estates in the act of creating the same. Section 2057, Id.

Cassoday, C. J., dissenting.

(Syllabus by the Judge.)

Appeal from Circuit Court, Milwaukee County; Lawrence W. Halsey, Judge.

Roger Moran died testate. In his will were these provisions:

"To my beloved wife, the land and appurtenances situated thereon, known and described as lot No. 7, and 33 acres of lot No. 6, east of the railroad lying in the Town of Granville, in the County of Milwaukee and State of Wisconsin, now possessed by me, during the term of her natural life and after her death to be divided equally among my children who may survive.

"I also wish my sister Julia Dolan to have an equal share of the above property with my children, if she survives the death of my wife."

Proceedings were duly had in the county court for the construction thereof, the question being whether the words of survivorship referred to the death of the testator or to the death of his wife. The decision was in favor of the former. The losing parties thereupon appealed to the circuit court, where they prevailed, judgment being rendered accordingly, from which this appeal is taken. Reversed.

Nath. Pereles & Sons (G. D. Goff, of counsel), for appellant. Toohey & Gilmore, for respondent Sarah Pynn. John F. Burke, for respondents Moran's widow and children. William W. Wight, guardian ad litem.

MARSHALL, J. This case presents for consideration a question not altogether new, but one that is of special interest in view of a material difference of opinion as to what constitutes a vested estate in the circumstances of the will in question, and the effect of section 2037, Rev. St. 1898, in respect thereto. From the views expressed independently in In re Albiston's Estate (Wis.) 94 N. W. 169, and more fully stated during the discussion leading up to the decision now reached, it appears that possibly there is an unsolved question here as to whether, when an estate is vested under section 2037, Id., on the subject of limiting the right to put restraints upon the power of alienation, words of survivorship necessarily take effect as of the time of such vesting, with all the common-law incidents of vested estates. That was the cause of the difficulty observable in the decision in In re Albiston's Estate, we venture to say, and of absence of the same difficulty in Smith v. Smith (Wis.) 93 N. W. 452, the statute being there cited as important if not controlling, which, so far as possible, was withdrawn in the opinion of the court in the later case, though without unanimous concurrence. The will in the Smith Case did not deal with real estate, but the use there made of the statute, upon the theory that realty was involved, is now said among us to be applicable here, the view being that, a vested right to take, as regards the statute respecting restraints upon the power of alienation, gives effect, in point of fact as well as in point of right to the common-law incidents of vested estates; that is, that the right, by force of the statute, is accompanied presently by the indefeasible title in remainder, the mere enjoyment of the property being postponed till the termination of some particular precedent period of enjoyment carved out for another or others, so that in case the person to take in remainder dies before the time arrives for his enjoyment to commence his right will go to his heirs. If that be the case, surely In re Albiston's Estate was decided wrong, and the judgment in this case is right. If we have overstated the scope of the doctrine which we feel bound to consider, and it goes only to making the statutory vesting presumptive evidence of intention that the actual vesting shall accord therewith, not to be overcome other than by clear and unmistakable evidence to the contrary, the necessity to discuss the question would be the same.

We entertain the view that the term "vested" is used in section 2037 in a much broader and far different sense than that of the common law. The latter comprehends not a mere right to a class to take in the future, which may be defeated as to any member thereof upon his death happening before the arrival of the period for taking in fact, but a condition of the title in præsenti, in that it is presently vested in point of fact as well as right in the remainderman in being, the enjoyment only being postponed until the happening of some specified contingency. Under the statute a class of persons having mere possibilities in respect to being clothed with the title in fee, upon the termination, in their lifetime, of a precedent life estate, so long as they possess the entire right to take in remainder, enabling them, by presently joining with the life tenant, to convey the whole title, are possessed of vested interests in the eye of the law, though they have no title presently, strictly so called, at all, and a nonsurvivor to the time for enjoyment to commence will never acquire any such title.

Section 2037, Id., has nothing to do, necessarily, with the question of vesting in a common-law sense, in the sense material to the question of whether there is an actual taking of the title in remainder upon the death of the testator under the same or similar circumstances to those of this case, that will

Digitized by Google

preserve such title as to each of the remaindermen or in his line. The statute cited, with its accompanying provisions, deals mainly with limitations upon the right to absolutely suspend the power of alienation. For that purpose mere possessors of possibilities as to receiving a fee title are deemed by the fiction of the law, so to speak, to have present vested estates. if conditions be such that they may, by joining with the person or persons presently enjoying the property, convey it absolutely. It must be plain that where such is the case, in respect to a devise of an estate to be divided between members of a class who may survive until the expiration of a precedent life estate, no member of the class takes title, strictly speaking, during such precedent period. The right of each is dependent upon his surviving until the period for taking and distribution arrives. It is wholly contingent by the common law, though plainly vested by our statute, section 2037, and contingent as well.

If we are right in the foregoing, and the influence of a contrary theory has to any degree colored the treatment of any of our decided cases so that it may reasonably be believed that it has received endorsement as the law, the advisability of guarding against the danger that might come of it cannot be over estimated. We will say in passing that if there is a case in our books where a wrong conclusion was reached under the influence of such a contrary theory, we are unable to find it after a very thorough search therefor; while, on the other hand, we find it very distinctly recognized, in the opinion of Ford v. Ford, 70 Wis. 19, 33 N. W. 188, 5 Am. St. Rep. 117, written by the present Chief Justice, quoting from the masterly analysis of the New York statutes on the subject of perpetuities, of which ours as to real estate is a copy. in Coster v. Lorillard, 14 Wend. 265, this single sentence referring to the terms "contingent" and "vested" as regards future estates such as are referred to in our section. 2037, Rev. St. 1898: "These definitions of vested and contingent remainders are very different from the common-law definitions of these estates." With the characteristics of a vested estate at common law clearly in mind, one may easily observe, upon reading the statute, that there was no purpose to embody therein in its entirety the common-law idea, nor any intention to deal, either as a rule of evidence or otherwise, with the meaning of testamentary or contractual words as regards when title is or is not vested, respecting anything but limitations upon the right to absolutely suspend the power of alienation and the other features found in the statutes, among them, that rendering expectant estates, whether contingent or vested, transferable and subject to be defeated by any act or means which the party creating the same may have prescribed. Sections 2033, 2034, 2057, Rev. St. 1898.

Really, this matter seems to have been so definitely settled along the lines we have indicated. since the first full definitions of the statutory system of vested and contingent estates and limitations upon the right to suspend the power of alienation were given, found in the opinion of Savage, C. J., to which we have referred. though the controversy was unsuccessfully renewed in respect thereto in New York, as we shall see, that we would not feel justified in this extended treatment if we were not face to face, as indicated, with a division of opinion in respect to the matter. In that situation, if we must adhere to the view that a vested estate under the statute is not a vested estate, necessarily, at common law, and that the statutory vesting does not militate against the possession of the right being divested and the same going over to some other person or persons under the circumstances of the case before us, it is due to the court that the fact should be stated, accompanied with reasons therefor, even if in the course thereof we drift somewhat into a discussion of elementary principles.

"Vested remainders (or remainders executed, whereby a present interest passes to the party, though to be enjoyed in future) are where the estate is invariably fixed. to remain to a determinate person, after the particular estate is spent. As if A. be tenant for twenty years, remainder to B. in fee: here B.'s is a vested remainder. which nothing can defeat or set aside." 1 Cooley's Blackstone, Bk. 2, p. 169.

There is the essential of the common-law vested remainder told so plainly that one cannot well mistake it for a definition of vested remainders under sections 2037 and 2038. Rev. St. 1898. After the adoption of the new system in New York, as is usual in all radical departures from the common law. many eminent judges did not take kindly thereto and struggled to retain the common-law characteristics of vested estates, notwithstanding the plain language of the statute inconsistent therewith. As late as 1869, some over 40 years after the new system was adopted and more than 30 years after the decision in Coster v. Lorillard, so eminent a jurist as Judge Grover, in Moore v. Littel, 41 N. Y. 83, in a very vigorous opinion, concurred in by two of his associates, insisted that the vested future estate of the statute is in all respects the vested remainder at common law, and that a person not answering the calls of the common-law rule in that regard, yet having an estate in expectancy. has at best but a contingent interest. He argued that, otherwise, in case of a devise to A., remainder over to the children of the testator living at the death of A., such children would take both vested and contingent remainders, which would be an absurdity; that the only way to avoid confusion is to hold that in such a case. since no one can tell to whom the estate in remainder will finally go, it is contingent. Applying that to the

Digitized by Google

case before us, viewing the will as a devise to the testator's wife, remainder over to the survivors of the class composed of his children and sister Julia, they all, under the statute and from the common-law standpoint as well, took contingent remainders. On the other hand the court, speaking by Woodruff, J., held that the new system was not intended to be a statutory declaration of the common law, but an abrogation of it, in some respects at least, and a substitution in lieu thereof of a new system of vested estates which might be mere possibilities, or estates vested in one sense but contingent in another,—vested, but subject to be divested upon the happening of a condition subsequent, and not affected by common-law incidents of vested estates or by any other than those indicated in the statute. In the case there in hand there was a devise to A., who had children, remainder over to his heirs. The question was, did the children take interests in severalty during the lifetime of the father, which any one of them could convey, and if so would the conveyance pass an indefeasible interest or one subject to be defeated by the decease of the grantee during the lifetime of the father? In the affirmative it was contended that they took contingent interests by the rules of the common law, which were inalienable during the lifetime of the father and subject to be entirely defeated as to any one of them by his decease during continuance of the life estate; and that the statutory system was not intended to change such rule. In the negative it was contended that, if conditions exist in any case so that instantly upon the determination of the particular estate those who are to take in remainder will be known, the estate in remainder is not, strictly speaking, a contingent remainder at common law or under the statute, though it be not an indefeasible estate during the existence of the particular estate. The learned judge who wrote the opinion recognized that there was some difference of opinion as to the true character of vested remainders at the common law, strictly so called. He thought, in a true sense a remainder may be vested under the common-law rules, and yet be subject to be divested upon the happening of a contingency. By that it will be seen that the definition of a contingent remainder, by the elementary rule stated by the old writers, was enlarged somewhat in an effort to make the statutory and common-law rules harmonize. But during the discussion the learned judge thought best to discard "all the abstruse and refined discussions and disputes, as to what constitutes an estate, and what a mere possibility or expectation," by common-law principles, and to look to the plain language of the statute. In that he saw, rejecting technical expressions and phrases ordinarily employed, that "person" in the statute meant just what it expresses and no more; that is,

" 'When there is a person in being,' means when you can point to a human being, man, woman or child; and, 'who would have an immediate right to the possession of the lands upon the ceasing of the precedent estate,' means that if you can point to a man, woman or child who, if the life estate should now cease, would, eo instanti et ipso facto, have an immediate right of possession, then the remainder is vested, and, by necessary consequence, all the contingencies which may operate to defeat the right of possession are to operate, and only to operate as conditions subsequent."

That is to say, that a true vested remainder under the statute may be but a contingent remainder at common law. It may or may not be according as the "man, woman or child" you shall point to be entitled to take in remainder, as one "whose estate nothing can defeat or set aside," or one whose right "in remainder may never take effect," referring to the definition quoted from Blackstone, which harmonizes with all the older text-writers, and all the new as well, that have not fallen into confusion by failing to appreciate that the statutory definition is not a mere statutory enactment of common law, but one that largely cuts loose from the common law and erects a new system.

It is said in 4 Kent, Comm. (4th Ed.) 202, speaking of common law estates:

"An estate is vested when there is an immediate right of present enjoyment, or a present fixed right of future enjoyment. It gives a legal or equitable seisin."

Speaking in close connection therewith it is said that under the New York statute there is a vested estate "when there is a person in being who would have an immediate right to the possession of the lands, upon the ceasing of the intermediate or precedent estate." And again, at page 206, speaking of the distinguishing characteristics between vested and contingent remainders, it is said: "It is not the uncertainty of enjoyment in future, but the uncertainty of the right to that enjoyment." Applying that to the case in hand, we see that the right of enjoyment as to each remainderman, at the death of the testator, was dependent upon his surviving the life tenant.

In 2 Washb. Real Prop. (6th Ed.) § 1532, the same rules are stated in this way:

"The broad distinction between vested and contingent remainders is this: In the first, there is some person in esse known and ascertained, who, by the will or deed creating the estate, is to take and enjoy the estate upon the expiration of the existing particular estate, and whose right to such remainder no contingency can defeat. In the second, it depends upon the happening of a contingent event whether the estate limited as a remainder shall ever take effect at all."

One will easily apply that to the case in hand at once, seeing the contingency as to whether any particular remainderman will ever survive the life tenant.

Digitized by Google

The controversy we have indicated as existing in New York a generation after the new system had received judicial exposition in Coster v. Lorillard, exhibits the tenacity with which courts cling to common-law principles even after being displaced by a plain statute, as we have before indicated. When we observe that the controversy opened in 1832 and was then fully settled, so far as a single judicial decision can settle any question, and the doctrine there announced was fully indorsed in the great case of Hawley v. James, 16 Wend. 61, and yet observe that it was in vigorous activity in 1869, we need not marvel very much to find ourselves, a generation later, discussing the matter afresh.

We have striven to treat the subject in hand as briefly as possible and yet do justice to the court and the question, drawing only from the very fountain heads of the common law, and of statutory exposition applied to the new system in New York before it was adopted here. There is no end to what might be said if we were to endeavor to review decided cases in detail. Such a review would be interesting and would probably re-enforce very strongly what has been said, yet the principles finally declared would probably not be left as easily understood and impressed as firmly upon our judicial system as by omitting such discussion. However, we cannot well close the matter without referring more particularly to Coster v. Lorillard and Hawley v. James, because they were, in effect, incorporated into the New York statutes before we took them.

In Coster v. Lorillard the ultimate question at issue was whether, upon the facts, there had been an unlawful suspension of the absolute power of alienation. Justice Savage at the outset, in discussing the statutes, referred to the notes of the New York revisers as indicating what their purpose was in framing the new system, namely, that it was, among other things, to "render a system simple, uniform and intelligible, which was various, complicated and abstruse," showing that they purposed more than a mere solution, by statute, of uncertainties in regard to the common law; that they contemplated radical changes in the essential elements of estates. These expressions, showing what the revisers intended, were quoted:

"To abolish all technical rules and distinctions, having no relations to the essential nature of property or the means of its beneficial enjoyment, to define with precision the limits within which the power of alienation may be suspended by the creation of contingent estates, and to reduce all expectant estates substantially to the same class, and apply to them the same rules, whether created by deed or devise."

"If a rule of law is just and wise in itself, apply it universally, so far as the reasons upon which it is founded extend, and in no instance permit it to be evaded; if it is irrational and fanciful, or the reasons upon which it is rested have become obsolete, abolish it at once."

So it will be seen that the revisers constructed the new system regardless of anything in the old one which, in their judgment, was "irrational and fanciful," or rested upon "obsolete reasons," or was "various, complicated and abstruse." They published, in effect, that they intended to make "great and radical changes throughout," quoting the language of Chief Justice Savage. Did they accomplish their purpose as to vested and contingent estates? We may best answer that, for the purposes of this case, by further quoting from Chief Justice Savage's opinion:

"These definitions of estates and contingent remainders, it will be seen, are very different from the common-law definitions of those estates. At the common law vested remainders are those by which a present interest passes to the party, though to be enjoyed in the future, and by which the estate is invariably fixed to remain to a determinate person after the particular estate is spent. By this definition the remainder in the present case is not embraced, for, by the devise, a present interest does not pass to any particular determinate person to whom it is to remain invariably fixed. * * * But by the statute definition this is a vested remainder, because there are persons in being who would have an immediate right to the possession upon the ceasing of the precedent estate, that is, there are persons in being who would take the possession of the estate were the precedent estate now to cease. * * * This remainder is also contingent, according to the statute definition."

"The learned antiquarian will pause and ponder over this vast pile of ruins; venerable at least for their antiquity, the erection of which occupied centuries, and put in requisition the labors of kings, ecclesiastics and laymen. Upon these ruins have been erected new edifices—a new system of uses and trusts, apparently plain and intelligible, and adapted to the real wants of society; but whether it is so in reality is yet to be proved."

In Hawley v. James, Coster v. Lorillard was fully approved, and the idea that a remainder can, in a true sense, be called other than contingent when the right of future enjoyment by the terms of the will is dependent upon survivorship, was repudiated in the most vigorous terms. In the opinion by Justice Cowen a distinction was drawn between vesting in respect to the mere right to take contingently, and in respect to vesting in interest. After indorsing, expressly, all that was said by Savage, C. J., in the Coster Case, and reviewing many authorities, he said:

"With such a train of authorities, so clearly settling and recognizing the rule, * * * that survivorship is an uncertain event, and prevents the person who is to take, from being determinate and ascertained, and especially where there is an alternative as to the

Digitized by Google

persons, depending on their being in esse at a given period of time, I cannot allow myself to entertain a moment's doubt that the remainder in this case is contingent, and that it cannot vest in interest until the persons who are to take are ascertained by the fact of their being in life at the expiration of the trust term."

We may rest from our labor, satisfied, it seems, that we have demonstrated that our statute, section 2037, is not a declaration of the common law at all, though common-law terms are found therein; that the fact that an estate in remainder is vested as regards limitations upon the right to suspend the absolute power of alienation does not suggest that it is vested absolutely in remainder and that the remainder is alienable according to the rules of the common law. It may be a contingent remainder only, if such be the expressed intention of the creator of the estate. When we are called upon to determine whether, as to an estate in remainder created by will, it vested absolutely at the death of the testator, we are not to be influenced by the statutory rules upon the subject of restraints upon the absolute power of alienation, but by the will itself. The statute, in effect, so declares. Section 2057, Rev. St. 1898. However, we are to keep in mind, of course, where the intention of the testator is not plainly expressed, the familiar rules for solving ambiguities. Having determined the testamentary intention of the testator, the question of whether the effect of the will was to create mere contingent remainders will have been answered, though what we call such, if there were circumstances requiring us to test the will as regards whether it unduly suspended the absolute power of alienation, we might find, in that light, that we were dealing with vested estates. In short, in solving the question before us in this case, the statute, section 2037, does not necessarily cut any figure whatever. True, the estates in remainder, for the purposes of the statute, are unquestionably vested estates; but that does not militate at all against their being contingent by the rules of the common law so that the result of the decease of any one of the prospective takers in remainder would be to defeat his right, and cause the same to devolve upon the other members of his class, nor upon the estate being subject to be divested, and go as indicated by the statutes as well.

Many principles here discussed were treated to some extent in Becker v. Chester, 115 Wis. 90, 91 N. W. 650. They would, had they been applied, have led to the result reached in Smith v. Smith (Wis.) 93 N. W. 452, McWilliams v. Gough (Wis.) 93 N. W. 550, and In re Albiston's Estate (Wis.) 94 N. W. 169, and perhaps some other cases, regardless of the doctrine of equitable conversion.

Applying the foregoing to the will before us, viewing the sister of Roger Moran and his children as a class, if he intended that neither should take till the death of his wife, all became possessed, at his death, of contingent remainders by the common law, since there was not then, as to either, "a fixed right of future enjoyment." Testing their interests by the statute they were estates in expectancy, because limited to commence in possession at a future date. Sections 2033, 2034, Rev. St. 1898. Such estates were also properly designated as remainders, because dependent upon a precedent estate, and, whether vested or contingent, were transferable absolutely or subject to be defeated upon condition subsequent. Sections 2035 and 2057, Id. The future estates or remainders were vested in character under section 2037, because there were persons designated who "upon the termination of the intermediate estate would eo instanti et ipso facto have an immediate right to the possession and enjoyment." Such estates were also contingent under section 2037, since at no time prior to the termination of the precedent estate could we point to any particular one or more of them, singling out the person or persons who would at all events ultimately become possessed of the property. Such remainders, from their creation, were subject to be defeated, "in any manner or by any act or means which the testator, at the creation of the estates, and in the creation thereof, provided or authorized." Section 2057, Id. It follows, necessarily, that in whatever way we view the will, we have the plain, simple duty to perform of discovering the intention of the testator and giving effect thereto, since there is nothing about the testament offending against any law. In determining the testamentary intention we must look only to the will. Rules of law may aid in discovering it, but they do not control or defeat it. That doctrine was very concisely expressed and directly applied in Smith v. Smith (Wis.) 93 N. W. 452.

Turning now to the performance of the primary duty above indicated, it must be conceded that, whether the testator intended his children to take immediately upon his death, and that the enjoyment only should be postponed till the termination of the life estate, depended upon whether the word "survive" was used with reference to his death or that of his wife. No statute or common-law rule controls that, as we have seen, or affects it, except by way of solving ambiguities. Precedents cannot help to any great degree. It may be admitted that, nothing appearing clearly to the contrary in the language of a will, the presumption generally is that a bequest or devise takes effect "in point of right upon the death of the testator" (Scott v. West, 63 Wis. 529, 24 N. W. 161, 25 N. W. 18), and that the law favors the vesting of estates, and that a construction of a will that will accomplish that result will be preferred to one which does not (Patton v. Ludington, 103 Wis. 629, 79 N. W. 1073, 74 Am. St. Rep. 910). Many other

Digitized by Google

helpful general rules might be referred to, to which we could resort in solving ambiguities. But at the outset we must have ambiguity before we can enter upon the field of interpretation or construction. Too often that fundamental principle is not given its proper significance, and ambiguities are created by construction when there are none in fact,—the meaning of the will being either plain and unmistakable, giving the words their ordinary signification, or the probabilities pointing so strongly in one direction that the paramount duty of the court to give effect to the purpose stands in the way of seeking for a justification to go in some other way.

Much is said in cases of this kind by way of argument as to circumstances sufficient to overcome the presumption as to vesting upon the death of the testator, as if there were always such a presumption, and as if in case of such vesting having taken place there could be no divesting, which is not the fact, as we have seen. Such rules prevail in the absence of anything in the will clearly indicating to the contrary. But where there is a precedent life estate, and the devise or bequest is not direct to those who are to take in remainder, leaving the period of enjoyment to commence only after the termination of a precedent life estate, but the bequest or devise is in the form of a direction or an expressed purpose that at the termination of the precedent estate the property shall be divided between certain persons specified, that circumstance is held to effectually displace the presumption as to immediate vesting, and create the presumption, nothing appearing clearly to the contrary, that the intention of the testator was that the estate in remainder should not vest until the time for division and distribution should arrive. Smith v. Smith (Wis.) 93 N. W. 452; Patton v. Ludington, supra; Scott v. West, supra; Matter of Denton, 137 N. Y. 428, 33 N. E. 482; Fowler v. Ingersoll, 127 N. Y. 472, 28 N. E. 471; Matter of Baer, 147 N. Y. 348, 41 N. E. 702; Lyons v. Ostrander, 167 N. Y. 135, 60 N. E. 334; Matter of Brown, 154 N. Y. 313, 48 N. E. 537; Salisbury v. Slade, 160 N. Y. 278, 54 N. E. 741; Underhill on Wills, 346.

Much difficulty, it seems, often arises by being impressed so strongly with the general rule as to the immediate vesting of estates, applicable where the devise or bequest is direct to the remainderman, as in Patton v. Ludington, that the rule, applicable where the devise or bequest is not direct in form, but rather in the form of a direction to divide and distribute after the termination of the precedent estate, and also the distinction between vesting at common law and under the statute, particularly that as to the former the estate may have all the characteristics of a contingent estate at common law, and that the statute so provides, are overlooked or not given their proper weight. The second rule mentioned was applicable and given full effect in In re Albiston's Estate (Wis.) 94 N. W. 169, and McWilliams v. Gough (Wis.) 93 N. W. 550. The distinction should always be made between a devise or bequest to a class subject to a precedent life estate, and a devise or bequest to one for life with a direction, express or in effect, that at the termination of the life estate the property shall be divided and distributed between the members of a class, regardless of whether the property dealt with be realty or personalty. That important distinction will be found very thoroughly discussed in some of the New York cases we have cited. By keeping it in mind, one may easily understand how the decision was arrived at in Matter of Brown and similar cases, that there was an immediate vesting upon the death of the testator, and the decision was arrived at in Matter of Denton, and Salisbury v. Slade, that the vesting of the estate was postponed till the termination of the precedent life estate. At the same time one will avoid confusing Patton v. Ludington and similar cases with In re Albiston's Estate and similar cases. In the latter class of cases the words of survivorship, nothing appearing to the contrary, are presumed to refer to the happening of the event which will render necessary the ascertainment of the members of the class among whom the remainder of the estate is to be divided; while in the former class, such words, nothing appearing to the contrary, are presumed to refer to the death of the testator. So, in connection with the rules that the law favors the immediate vesting of the estate upon the death of the testator, and that it will be presumed that such was the intention of the testator, nothing appearing to the contrary, it should be understood that the necessity for the ascertainment of the members of a class among whom the estate is directed to or will be divided after the termination of the precedent estate, satisfies the proviso of the rule in respect to immediate vesting and destroys its force. A devise or bequest to a class is deemed to be one thing, and a devise to the survivors out of a class, or a direction, as in this case, that "after," etc., the property "to be divided equally among," etc., used in connection with express words of survivorship, closely connected with the event to which the word naturally refers, is plainly another thing. The term "vested" is here used with reference to its strict common-law signification, that is, the condition, as we have seen, where the right has become fixed where it is to remain absolutely, though the enjoyment thereof may be postponed to the termination of a particular precedent estate.

In Lyons v. Ostrander, supra, the will was treated as if it dealt with real estate, though it is true the doctrine of equitable conversion might well have been applied. It does not seem, however, that the character of the law in that regard was considered materi-

Digitized by Google

It was said that the rule that words of survivorship in a will refer to the time of the testator's death does not apply to a case where a point of time is mentioned in the will other than the death of the testator, to which the contingency which shall call for a distribution and division of the estate can be referred, or where a life estate intervenes, or where the context of the will evinces an intent that the vesting of the estate in the remainderman shall be postponed. Here "vesting" was used in its common-law sense. So it was held that, although under the circumstances of that case a remainderman took a vested interest upon the death of the testator, speaking, evidently, of vesting in the statutory sense, it became divested by the predecease of the life beneficiary, and went over to the children of such deceased remainderman, not by force of the law, but because the will so directed.

Probably the rule that a devise or bequest to be divided between the members of a class at some point of time distant from that of the death of the testator, nothing appearing to the contrary, means among such persons as shall then be "in esse" is as well illustrated by Matter of Baer, 147 N. Y. 348, 41 N. E. 702, as could be by reference to a multitude of cases. It is sufficient to refer to the syllabus covering the subject, which is a concise deduction from the opinion of the court:

"Where final division and distribution is to be made among a class, the benefits of a will must be confined to those persons who come within the appropriate category at the date when the distribution or division is directed to be made."

In such a case the will, nothing appearing to indicate a contrary intent, is to be read, not as a devise directly to the members of the class, as explained in Patton v. Ludington, but as a devise to the survivors of the class, the term "survivors" pointing to the time set for the division to take place. That is because the circumstances evidence such as the testamentary intention, which must always govern, as we have seen. We do not shape that with reference to any statute, but we find what that is, and then we give the appropriate name to the estates created. If we call them vested estates, where they fall within the rule stated, we mean vested in a statutory sense, and subject to be divested upon condition subsequent. We have a good illustration of that in vol. 4, Gould's Edition of Kent, p. 203, which also illustrates the confusion that one is liable to fall into by not distinguishing common law from statutory vesting. The editor quotes Williams on Real Property to the effect that an estate always ready for distribution upon the termination of the precedent estate, answers to the calls of a vested remainder, saying, in effect, that while that accords with the New York statute, it is defective as a common-law definition, and gives this illustration, citing many authorities:

"If land is devised to the testator's wife for life and at her death to such of the testator's children as shall then be living," upon the will taking effect, there being a wife and children, "the persons who would take at any given instant, if the wife's estate should determine, then, are ascertained, and the remainder is always ready to come into possession at any moment. Yet this is unquestionably a contingent remainder. On the other hand a devise to testator's wife for life, remainder to B., C., D., E., and F., 'provided that if any of the last five named children die before my wife, then the property to be equally divided between the survivors,' gives a vested remainder, defeasible on condition subsequent." While the illustration is valuable to support our conclusions here, we think the learned author failed to note the full scope of the distinction between the common-law and the statutory definitions under which, in both cases, the remainders were contingent by the common law, and both vested and contingent by the statute; vested, because at every instant of time after the taking effect of the will there would be persons in being who would have the immediate right to the possession upon the termination of the precedent estate; contingent, because at no instant of time prior to the termination of the precedent estate could any one or more of the remaindermen be pointed to as the person or persons who would ultimately enjoy the property. The author recognizes that whether any member of the class will ultimately take is dependent upon the same contingency, viz., survivorship till the termination of the precedent estate. He then finds a reason for calling the remainder first one thing and then another to satisfy the intention of the testator, which does not concern the substance of things at all. Why such straining to use terms by their common-law meaning regardless of the utter uselessness thereof? The author finally comes down, as will be seen from a careful examination of his notes, to the idea that the testator's intention must govern regardless of what we call the estates which he creates. That was the conclusion in Smith v. Smith, supra, where Mr. Justice Winslow, speaking for this court, said, in effect, that all minor rules and statutes are to promote rather than to defeat the one dominant principle that the intent of the testator must prevail. There the direction to divide and distribute at a future uncertain time was held to indicate that only those in esse at the instant of time set for the distribution were entitled to take, because, regardless of what we might name their remainders, they were after all but expectant estates and it was competent for the testator to give any direction to them he might see fit, under section 2057, Rev. St. 1898, so long as section 2038 was not violat-

Digitized by Google

ed. The decisions in Scott v. West, Ford v. Ford, and Patton v. Ludington, are in harmony with that view.

It is believed that if the learned trial judge had viewed the will before us in the light of the foregoing stated principles, a different result would have been reached than the one complained of. The will contains the elements of precedent life estate, remainder, which the testator directed to be equally divided among his children, the direction limited by the words, "who may survive," used in direct connection with the event upon which the division was made dependent, to wit, the death of his wife, and nothing appearing upon the face of the will indicating that the words of survivorship referred to any other event than that event. Going no further, it would seem that the members of the class among whom the testator intended his estate in remainder to be divided must remain uncertain till the death of the life tenant. If there could be any reasonable doubt about that from the language of the residuary clause referred to, there is the second paragraph added, which would remove that doubt. After the use of the language wholly disposing of the entire estate, the added words, in a separate paragraph, "I also wish my sister Julia Dolan to have an equal share of the above property with my children, if she survives the death of my wife," indicate very strongly this to have been the state of the testator's mind at the time of making such addition: either, in drafting the preceding paragraph by inadvertence his sister Julia was omitted; or after the testator's scheme, as at first formulated, was fully spread upon the paper, it occurred to him that his sister Julia should be provided for, whereupon, with the idea to place her in the class with his children, he added the words above quoted. It seems unmistakable, taking both paragraphs together, that the purpose of the testator was to put his children and his sister Julia into one class for distribution of his estate in remainder equally after the death of his wife.

The judgment appealed from is reversed and the cause remanded to the circuit court with directions to enter judgment affirming the judgment of the county court and for further proceedings according to law. The taxable costs in this court upon both sides will be a charge on the contingent interests of the parties to this litigation in the property in controversy, but not paid out of the estate to the prejudice of the life tenant.

CASSODAY, C. J. (dissenting). I do not wish to have the ground of my dissent in this case misunderstood. The case of Coster v. Lorillard, 14 Wend. 265, commented upon at length in the opinion filed, and the case of Hawley v. James, 16 Wend. 61, therein referred to, were both cited in the opinion of this court in Ford v. Ford, 70 Wis. 19, 60, 61, 33 N. W. 188, 5 Am. St. Rep. 117. Those cases were thus cited because the question under consideration was whether the devise of the homestead, in Wisconsin, in trust, by its terms, suspended the absolute power of alienation for a longer period than prescribed by the statutes in force in this state, and which had been copied from the statutes of New York—citing sections 2034. 2037, 2038, 2039, 2086, 2089, and 2091. Following those cases, it was held that such devise of the homestead was invalid, because during the period prescribed there was and could be "no person in being by whom an absolute fee in possession" could be conveyed. Ford v. Ford, supra; Coster v. Lorillard, 14 Wend. 303, 307 (per Savage, C. J.); Hawley v. James, 16 Wend. 121, 122 (per Nelson, C. J.). What was said in those opinions about vested and contingent estates and remainders, had reference to the question of perpetuities. But no such question has been raised by counsel in this case, and no such question is here involved. The only question here for consideration is the construction to be given to the devise which gave, bequeathed, and disposed of the estate as follows: "To my beloved wife the land and appurtenances" described "during the term of her natural life, and after her death to be divided equally among my children who may survive." The language is plain, and free from ambiguity. There is no question of equitable conversion involved. The simple question here is whether, upon the death of the testator, the children took a vested estate in the lands so devised. Four years after the decision in Hawley v. James, supra, the same court held that: "In a devise of real estate to one for life, and from and after his death to three others, or to the survivors or survivor of them, their or his heirs and assigns, forever, the remaindermen take a vested interest at the death of the testator, and, consequently, though at the time of the decease of the tenant for life there be but one of the remaindermen surviving, he takes only one-third of the estate, and the heirs at law of the two others take the residue. The words of survivorship refer to the death of the testator, and not to the death of the tenant for life, unless from other parts of the will it be manifest that the intent of the testator was otherwise." Moore v. Lyons, 25 Wend. 119, reversing the judgment of the Supreme Court in the same case with Nelson, C. J., presiding. That decision has frequently been sanctioned in New York. The reasoning of the dissenting opinion of Judge Grover in Moore v. Littel, 41 N. Y. 66, 87–97, cited in the opinion on file in this case, gives support to the decision in this case. But the court in that case held that: "A grant to A. for life, and after his decease to his heirs and their assigns, forever, gives to the children of the latter a vested interest in the land, although liable to open and let in after-born children of A., and liable also (in respect of the interest of any child) to be wholly defeated by his death before his father. Such an interest,

Digitized by Google

whether vested or contingent, is alienable during the life of A. (the tenant for life), and passed by deed or mortgage, subject only to open or be defeated in like manner as before." To the same effect, Griffin v. Shepard, 124 N. Y. 70, 26 N. E. 339; Campbell v. Stokes, 142 N. Y. 23, 36 N. E. 811. Judge Grover alone dissented from the last proposition quoted, and two other of the eight judges concurred in his dissent from the first proposition quoted. Speaking of that dissenting opinion, the same court, in a learned and discriminating opinion, concurred in by all the judges, subsequently said that: "The court did not concur in the reasoning, or the conclusion to which it led. Followed steadily to its logical consequences, it would apparently take out of the operation of the statute a large class of future estates upon the ground that they are mere possibilities, and not estates at all. The collision at the bottom of that case was over the character of a contingent remainder limited to the heirs of a person then living. The majority of the court, founding their opinion upon the definitions of the Revised Statutes and their express authority, held that the children of John Jackson had, during his life, and notwithstanding the uncertainty of their ever living to be his heirs, an expectant estate, which could be aliened. The dissent went upon the ground that such children, during the life of the father, had no estate at all, but only the possibility of acquiring one, which, therefore, was not the subject of a conveyance." That case, as there said, "at least settled the question that such a contingent right as was devised to John Foley is within the definition of expectant estates, and governed by the provisions of the Revised Statutes. It is true that, to allow of title by descent, there must be something to descend; and what that is, in a case of contingent remainder, which may never vest either in interest or possession except a mere possibility of acquiring an estate, is a question which the mandate of the statute sufficiently answers, but which may also be answered on principle. John Foley had something more than a mere possibility of acquiring an estate. He had the fixed, absolute right to have the estate if the contingency occurred. That right was conferred by the will of the testator, and vested in him at the instant of the latter's death. The devisee held it as a vested right, but such a right as the contingent and uncertain character of the devise created; nevertheless a fixed and vested right, which the Revised Statutes recognize as an estate, placed in the category of expectant estates, and decree shall be descendible and which as we have already seen was descendible even at common law." Hennessey v. Patterson, 85 N. Y. 102, 103. And so I think the logical consequences of the decision in this case are the same as that court so declared to be the logical consequences of Judge Grover's dissenting opinion, and that is "that it takes out of the operation of the statute a large class of future estates upon the ground that they are mere possibilities, and not estates at all." To my mind, the language of the devise in this case is substantially the same as the devise in Moore v. Lyons, supra, and the grant in Moore v. Littel, supra, and should receive the same construction. So construed, the children had an interest capable of being conveyed by deed or mortgage during the life of the mother, subject only to open or be defeated, as mentioned. The decision of the court in Moore v. Littel, supra, has often been sanctioned in New York. The devise construed in Livingston v. Greene, 52 N. Y. 118, 123, was quite similar, and in that case Peckham, J., speaking for the whole court, said that: "The words 'after,' and 'upon the death of the wife,' and like words, do not make a contingency, but merely indicate when the remainder shall take effect in possession—the commencement of the enjoyment of the estate." In that case the testator's children all survived him, but several of them died before the widow; and it was held "that the children took a vested remainder, not subject to be defeated by their death prior to that of the widow." To the same effect, Embury v. Sheldon, 68 N. Y. 227, 235, 236; Kelso v. Lorillard, 85 N. Y. 177; Matter of Accounts of Mahan, 98 N. Y. 372, 376; Byrnes v. Stillwell, 103 N. Y. 453, 460, 463, 9 N. E. 241, 57 Am. Rep. 760. In Kelly v. Kelly, 61 N. Y. 47, the testator devised and bequeathed all his estate to his two children, and in case of the death of one the surviving child was to have the whole, and in case of the death of both the same was given to two nephews, with directions not to sell or mortgage until the youngest child should reach the age of 21; and it was "held that the death referred to was one happening in the lifetime of the testator; and that, he having died leaving the two children him surviving, they took a fee, and the limitation over was of no effect." In Van Axte v. Fisher, 117 N. Y. 401, 22 N. E. 943, the testator gave his residuary estate to his executor, in trust with power to sell and invest the proceeds and provide for and properly maintain D., and the balance on the death of D. was thereby given to J., who died before D., intestate, leaving children; and it was held that upon the death of the testator J. took a vested remainder, subject to the exercise of the power of sale, and that upon the death of J. his interest descended to his issue. Thus it has been held that: "The words 'from and after,' used in a testamentary gift of a remainder, following a life estate, do not afford sufficient ground in themselves for adjudging that the remainder is contingent, and not vested; and, unless their meaning is enlarged by the context, they are to be regarded as defining the time of enjoyment simply, and not of the vesting of title. The presumption is that a testator intends that his dispositions shall take effect in enjoyment or in-

Digitized by Google

terest at the date of his death; and upon the happening of that event, unless the language of the will by fair construction makes his gifts contingent, they will be regarded as vested. Words of survivorship and gifts over on the death of the primary beneficiary are to be construed, unless a contrary intention appears, as relating to the death of the testator." Nelson v. Russell, 135 N. Y. 137, 140, 31 N. E. 1008. The case at bar is quite similar to Stokes v. Weston, 142 N. Y. 433, 37 N. E. 515, where "the will of S. gave to his wife the use of all his property for life, the remainder to his three children—two sons, who were unmarried, and a daughter, who was married and had two children. The will then provided that in case of the death of the sons, or either of them, without issue then living, the share of the one so dying should be divided equally between the two grandchildren. * * * Held, that the death referred to was that of a son during the lifetime of the testator, and, as they both survived him, they, with their sister, took the entire estate, subject to the life estate of the widow." It was there also held that: "The law favors equality among children in the distribution of estates, and in case of doubtful construction of the language of a will it selects that which leads to such a result. So, also, the law favors the vesting of estates, and, in case a will contains apt words to dispose of the testator's entire estate, that construction will be given to it." So the case at bar is quite similar to Hersee v. Simpson, 154 N. Y. 496, 48 N. E. 890, where "the will of a testator, who left a wife and children surviving, devised a life estate in his real property to his wife, and provided that from and after her decease the property should be disposed of according to the statutes governing the descent of real property. Held, that the heirs of the testator upon his death took a vested remainder in his real estate." In that case the court also held that: "A remainder is not to be considered as contingent in any case where, consistently with the intention of the testator, it may be construed as being vested. The words 'from and after,' in a testamentary gift of a remainder following a life estate, do not make the remainder contingent, and prevent its being construed as vested, where there is nothing else on the face of the will tending to show that the vesting of the remainder was postponed or intended to be postponed beyond the death of the testator." I have thus quoted at length from New York cases, because certain cases from that state are cited in support of the decision in this case. But, in my judgment, the decision in this case is in conflict with the settled law in New York, as appears from cases cited, and numerous others which might be cited, and also numerous prior rulings of this court. Scott v. West, 63 Wis. 533, 563–573, 593–595, 24 N. W. 161, 25 N. W. 18; Baker v. Estate of McLeod, 79 Wis. 534, 541–545, 48 N. W. 657; Burnham v. Burnham, 79 Wis. 557, 566, 567, 48 N. W. 661; Patton v. Ludington, 103 Wis. 629, 646–650, 79 N. W. 1073, 74 Am. St. Rep. 910; Smith v. Smith (Wis.) 93 N. W. 452. It has the support, however, of In re Albiston's Estate (Wis.) 94 N. W. 169, in which I dissented. Id. 170. It is true that the devise quoted was followed by this clause: "I also wish my sister Julia Dolan to have an equal share of the above property with my children if she survives the death of my wife." But that did not prevent the estate from vesting in the children upon the death of the testator, subject to open and let in the sister Julia in case she should survive the death of the widow. This is in harmony with a number of the cases cited above, and many others which might be cited. Moore v. Littel, Griffin v. Shepard, Campbell v. Stokes, and Scott v. West, supra. As indicated in some of the cases cited, certain estates were vested under the New York statutes, from which ours were taken, which would not have been vested at common law. And yet, in my judgment, the estate in the case at bar was, subject to the life estate and the conditions mentioned, not only vested in the children immediately upon the death of the testator, under the statutes, but also would have been so vested at common law. If not, then in whom is such estate vested in the case at bar? Certainly not in the tenant for life, the widow, for by the terms of the devise the estate which she took terminated on her death. There is no claim that the widow or any one else took the remainder of the estate in trust, and there is no ground for making any such a claim. Thus, we have, by virtue of the decision in this case, the anomaly of an estate in remainder without any remainderman and without any trustee to hold such title, which, it would seem, is to remain without an owner, in trust or otherwise, during the life of the widow. That is the question that confronted this court in Scott v. West, supra. It was there held that upon the death of the testator the grandchildren then living took a vested remainder, subject to open and let in afterborn grandchildren, and to be divested by death without issue, notwithstanding the testator's daughters, as trustees, had the management of the estate during their lives and the life of the survivor of them. See pages 554, 555, 558, et seq., 63 Wis., pages 165, 167, 24 N. W., and other pages cited above. To my mind it is very clear that upon the death of the testator the land in question became vested in the children, so that the same could be conveyed by them subject to the widow's life estate and the condition named.

The foregoing statement is sufficient to indicate the grounds upon which I dissent.

Digitized by Google

PAXTON & GALLAGHER et al. v. VADBOUKER.

(Supreme Court of Nebraska. Oct. 16, 1901.)

CONTRACT—ACTION FOR BREACH—DAMAGES—GOOD WILL.

1. "Good will," as a property, is intangible, and is merely an incident of other property. It cannot be recovered for as an element of damage when the property to which it is attached has been voluntarily alienated.

2. An instruction given by the trial court which, in substance, tells the jury that if the daily sales were less, by reason of the failure to furnish staples, then the difference of the daily sales would be the measure of damages, without including therein any reference, nor regard to the profit or loss in the sale of the goods, *held* erroneous on the measure of damages, and prejudicial error.

3. Where damages are susceptible of actual computation, the amount thereof should not be left to conjecture.

4. In a suit for the alleged breach of a contract providing for the sale of goods at private sale at retail, wherein the breach alleged is the sale of a part of the goods at auction, the measure of damage is the difference of the price at which the goods sold at the auction, and the price at which the same goods would have sold at private sale at retail.

5. Refusal of the trial court to submit an instruction requested examined, and *held* error.

Commissioners' Opinion. Department No. 2. Error to District Court, Lancaster County; Hall, Judge.

"Not to be officially reported."

Action by Emilina M. Vadbouker against Paxton & Gallagher and others. Judgment for plaintiff. Both parties prosecute error. Reversed.

Doyle & Stone, for plaintiffs in error. Hazlett & Jack, F. N. Prout, and Burr & Burr, for defendant in error.

OLDHAM, C. Plaintiff sued the defendants in this cause of action for damages on a contract entered into between the parties on the 8th day of February, 1896, which said contract is as follows:

"Barnestown, Nebr., February 8, 1896. This agreement made and entered into the day and year above written, by and between Paxton & Gallagher, Kilpatrick-Koch Dry Goods Co., American Hand Sewed Shoe Co., Kind & Smead, Gilmore & Ruhl, Herman Bros., Hausner & Good, and William F. Dolan & Co., parties of the first part, and E. M. Vadbouker, party of the second part, witnesseth: The said party of the second part has this day given to each of the parties of the first part, a note secured by chattel mortgage, to secure the different amounts owing by said second party to the said first parties, and said first parties have taken possession of the property so mortgaged and are now in possession of the same.

"It is hereby agreed and understood, that said first parties are to place the said mortgaged property in the hands of C. N. Warren, as their agent for the purpose of disposing of said property by selling the same by retail. Said first parties are to furnish such staple goods, as may be necessary to meet th mand of the trade, and are to pay fo goods, so purchased out of the procee the sales and are also to pay the said ren for his services for disposing of th property, are to pay the rent and rü expenses of the selling said goods, and pay to P. Vadbouker $15.00 per week f services to assist the said Warren in d ing of said property, for which sum th P. Vadbouker, agrees to give the busine exclusive time and attention.

"After the entire expense of sellin disposing of the said property is paid, goods remaining from the sale of said erty are to be applied to the payment indebtedness owing by said second pa said first parties until said indebtedn entirely paid and satisfied.

"It is further agreed and understoo said agreement is to continue so long sales of said mortgaged property are factory to said first parties, and tha time first parties become satisfied tha costing too much to dispose of said pr in the above-described manner, then first parties are to sell said property a tion or in bulk to the highest bidder, properly advertising the same, but said are not in any event to be sold at aucti in bulk for the period of 60 days fron date.

"Said second party hereby sells, a and transfers to said first parties her books of account, and all bills receivabl hereby authorizes said first parties to said books of account, and all bills re ble and to receipt therefor.

"All money so received to be applied indebtedness owing by the second pa the said first parties."

The breaches of the contract set o plaintiff's petition, briefly summarized, alleged to have been the refusal of de ants to furnish the staple goods which necessary to the conduct of the business failure of the defendants to use diliger the collection of the notes and account signed by plaintiff; and the selling o goods at auction before the expiration 60-day limit, in violation of the con The damages asked were $5,000 for t leged conversion of the stock of goods 200 for the alleged conversion of the and accounts, and $1,800 for injury t good will of plaintiff's business. The de ants answer this petition, admitting the ing of the contract, and that within th riod of 60 days mentioned therein they some of the goods at auction on one but allege that the auction sale took pla reason of a subsequent oral agreement t effect between plaintiff and defendants. deny that they refused or neglected to nish staples. They further say that on 5, 1896, the plaintiff, by changing the on the store building, locked the store ag the defendants' agents, and thereby o

the defendants from the possession of the said goods, in violation of the terms of the contract; that thereupon they were compelled to replevin the goods, and foreclosed their chattel mortgage thereon; and that after selling the same, and applying the proceeds thereof to the debt, there still remains unpaid of the said mortgage indebtedness the sum of $600. Plaintiff filed a reply denying the new matter contained in the answer, and upon these issues a trial was had, and the jury returned a verdict for the plaintiff for $925.25. Both plaintiff and defendants filed motions for a new trial, which were overruled, and judgment was rendered on the verdict, and each prosecutes error to this court.

The principal contention of the plaintiff, Vadbouker, is that her verdict is too small. She sued for $8,000, and proceeds on the theory that a portion of this arises from a loss of "good will," which was of the alleged value of $1,800. The trial court, by an instruction given on its own motion, withdrew this question from the jury. In this, we think, the trial court was fully justified. By what process of reasoning can it be concluded that the good will of a business, when that business has been transferred to another, remains in the hands of the original party as a valuable asset? Good will, as property, is intangible, and is merely an incident of other property. Rawson v. Pratt, 91 Ind. 9. The good will without the business is nothing. If it is meant to be claimed that the parties intended by this contract that the possession was but temporary, and that plaintiff should have the stock back at the end of 60 days, with the good will unimpaired, a sufficient answer is that the intention in this respect must be ascertained from the contract, and the contract will not bear this interpretation. Plaintiff made this contract of her own free will, and terminated it by her own wrongful act in dispossessing, by force, the parties to whom she had given possession of the stock of goods under it. That question was settled in the replevin action between these same parties for this stock of goods, which action, with its results, was pleaded and proven in this case. Besides, this action is for a breach of the contract, and not for the wrongful taking and selling of this stock of goods. This is a material distinction, that should not be lost sight of in this case. This fairly disposes of the allegations of error relied on by plaintiff.

Defendants allege numerous errors in the trial of the cause below, but, as this case will have to be tried again, for reasons hereinafter given, it will only be necessary to examine their most serious assignments, which are with reference to the instructions given by the trial court on the measure of damage which plaintiff was permitted to recover, and particularly of the measure permitted on the alleged failure of defendants to furnish staples, and on the auction sale, and on the alleged negligence in collecting the notes and accounts assigned them by plaintiff.

In respect to the alleged failure to furnish staples, we fail to find any competent evidence in the record on which this claim can be based. The injury in this class of cases must be real—the damage actual. The trial court instructed the jury on the measure of damages, in substance, that if the daily sales were by reason of the failure to furnish staples, then the difference in the amount of the daily sales would be the measure of damages. No reference is made in the instruction to the profit or loss on the sales of the goods. The evidence on the part of the plaintiff shows that they were selling these goods during the time the defendants had charge, at cost. This was not denied by the defendants, nor is it complained of by plaintiff. How actual damage can occur by selling more or less at cost "passeth understanding," unless by reason of such failure such goods were afterwards sold at a sacrifice, and of this there is no competent proof in the record.

On the claim for damages for wrongfully keeping and retaining the notes, accounts, and bills receivable, which were assigned, and for neglecting and carelessly permitting a part to remain uncollected, the evidence shows that these notes and accounts were put in the hands of the bank at Barnestown as the agent of defendants, and that the total receipts from the collection thereof were but $39.87, which was applied on the indebtedness covered by the mortgage. The president of the bank testified that he made every reasonable effort to collect these notes and accounts while in his possession, except bringing suit; that he was acquainted with the financial standing of nearly all of the parties owing these claims; and that, in his judgment, the notes and accounts were nearly all noncollectible, and not worth to exceed "one cent on the dollar." The only evidence that plaintiff offered even remotely tending to sustain this claim was that of the witness Vadbouker, who testified that he thought that most of the claims were good. But plaintiff did not introduce any testimony pretending to point out a single note or account that was rendered uncollectible by the default of defendants' agent in not presenting the claims or bringing suit during the 28 days that these claims were in the hands of defendants' agent. The burden of proving this allegation of negligence was on the plaintiff, and it was for her to show specific facts from which proof of this negligence, and consequent loss to her, could be logically deduced. It is not sufficient to show that a large amount of notes and bills had been assigned to defendants, and only a small amount collected, and leave the question of negligence to be presumed from this fact alone; and especially will this not do when the allegation in the petition, as in the case at bar, only charges a failure in collecting "a part thereof." These damages were susceptible of actual

Digitized by Google

computation, and should not have been left to conjecture.

On the question of the measure of damages for the alleged breach of contract in holding the auction sale, defendants requested an instruction which fixed the measure of damages at "the difference in amount for which the goods sold at auction did sell, and the price for which they would have sold at private sale in the manner provided in the contract." This request was denied, and, instead of this measure of damage being submitted to the jury, the court told the jury that if they found that this breach of the contract had occurred, and "if such breach reduced the amount of daily sales between said dates [meaning the date of the contract and the date of the sale] below what such sales, the evidence satisfies you, would have been, had breaches not occurred, then that difference measures the extent of plaintiff's damage." If we have been correct in our conclusion on the measure of damage fixed by the court in the instruction on the alleged failure to furnish staples, it would follow that the same criticism applies to its measure of damage on the auction sale, and that the correct rule for estimating damages on this alleged breach of the contract was embodied in the instruction requested by the defendants and refused by the court. Sutherland, in his work on Damages (page 17), says: "The universal and cardinal principle is that the person injured shall receive a compensation commensurate with his loss or injury, and no more, and it is a right of the person who is bound to pay this compensation not to be compelled to pay more. This principle is paramount. By it all rules on the subject of compensatory damages are tested and corrected. They are but aids and means to carry out this principle, and when in any instance they do not contribute to this end, but operate to give less or more than just compensation for actual injury, they are either abandoned as inapplicable, or turned aside as an exception." Applying the above rule on this item, the actual damage sustained is the difference between what the goods sold for at auction, and what they were worth at the retail price they were then selling for, and no more.

It is therefore recommended that the judgment of the district court be reversed, and this cause remanded.

POUND and SEDGWICK, CC., concur.

Reversed and remanded.

KOEHLER v. REED et al.

(Supreme Court of Nebraska. Nov. 20, 1901.)

PLEADING—ANSWER OF CODEFENDANT—NOTICE — CROSS-PETITION — PERSONAL JUDGMENT—DEFAULT JUDGMENT—INJUNCTION.

1. Where a party is made a defendant in an action, and is duly served with process, he is charged with notice of whatever answer any of his codefendants may file only when such answer is filed within the time required b

2. When a personal judgment is ren against a defendant upon a cross-petiti which no relief is prayed against him, proper proceeding it is error to refuse to such judgment upon the ground that suc fendant has been guilty of laches in faili defend.

3. A party against whom judgment has rendered by default is not entitled to an i tion to restrain the collection of the judg and to have the judgment vacated an aside, and be permitted to defend, unle make it appear from his pleadings and (1) that he has a meritorious defense t cause of action on which the judgment based, (2) that he has no adequate reme law, and (3) that his plight is in no wi tributable to his own neglect.

Commissioners' Opinion. Departmen 1. Error to District Court, Furnas Co Norris, Judge.

"Not to be officially reported."

Action by Henry G. Koehler against I M. Reed and others. Judgment for de ants, and plaintiff brings error. Affirm part.

James McNeny and John M. Ragan plaintiff in error. McClure & Anderso I. Foss, and Norman Jackson, for defen in error.

DAY, C. This is an equitable action tuted in the district court of Furnas co by Henry G. Koehler against Emily M. executrix, C. B. Bachelder, clerk, G Coon, sheriff, and others, praying tha enforcement of a certain judgment b strained, that the same be vacated an aside, and that the plaintiff be allow make his defense to the action in whi was rendered. Upon the trial the cou nied the plaintiff the relief prayed and missed his suit. To review this rulin plaintiff has brought error to this The facts out of which the controversy are substantially as follows:

On April 9, 1892, Emily M. Reed, e trix, commenced a suit in the district of Furnas county against Peter Pen Charles C. White, receiver of Dawes & and Henry G. Koehler, the object and p of which was to foreclose a certain mort executed and delivered by said Penrau Reuben R. Reed. The petition containe averment that on May 19, 1890, the de ant Penraud sold and conveyed by war deed the premises sought to be foreclos Koehler, who as a part of the consider of said sale and conveyance assumed agreed to pay the mortgage described i petition. The plaintiff prayed for a fo sure and sale of the mortgaged prem and that said defendants Penraud and K ler be adjudged to pay any deficiency might remain after applying the proceed the sale to the payment of the debt. sonal service of summons was had upo fendants Penraud and Koehler. Defen

¶ 3. See Judgment, vol. 30, Cent. Dig. §§ 767 849.

Digitized by Google

White, receiver, entered a voluntary appearance, and filed an answer in which he pleaded his representative capacity and permission to sue, and also alleged that the loan sued on by the plaintiff had been negotiated by Dawes & Foss, and they had been compelled to pay one of the interest coupons upon said loan in the sum of $6.35; also, that on the same day plaintiff's note was executed the said Penraud had executed to Dawes & Foss five notes for the sum of $16.50 each, of which four remained unpaid, and to secure these notes had given to them a mortgage on the property described in the petition. Neither Penraud nor Koehler appeared in the action. On May 24, 1892, a trial was had, the court finding that the defendant Penraud executed and delivered the note sued on by the plaintiff, and that there was due thereon $690.15, and that the mortgage given to secure it was a first lien on the premises; that there was due Charles C. White, receiver, $72.35, on his cause of action set forth in his answer; and that his mortgage is a second lien on the premises. The premises were ordered sold to satisfy the decree. Pursuant to the decree the premises were sold and proceeds thereof distributed. Upon the confirmation of the sale the court entered a finding and judgment against defendants Penraud and Koehler for the deficiency, adjudging that they were personally liable to Emily M. Reed, executrix, in the sum of $350.88, and to Charles C. White, receiver, for $73.35.

The errors assigned in the case now before us may be reduced to the simple inquiry as to whether the court erred in rendering judgment for the defendants upon the pleadings and the evidence. The pleadings and the evidence offered by Koehler tendered a good defense to the original action. It is apparent, therefore, that conclusions of the learned trial judge must have been based upon the laches of Koehler.

It will be remembered that Koehler made no appearance in the action. He did not appear and defend, because he supposed his being made a party to the suit was for the sole purpose of foreclosing his equity of redemption in the premises. His presumption may have been a very plausible one from the facts as he understood them, and yet does that afford him a legal excuse for a failure to examine into the cause of action in which he was summoned to defend? The cross-petition of White, receiver, contained no averment that Koehler had assumed and agreed to pay the mortgage sought to be foreclosed by the cross-petition, nor was any fact alleged from which such an inference might be drawn. His name is not mentioned in the cross-petition, nor is any relief prayed against him. Had he examined the cross-petition, it would have disclosed nothing requiring an answer from him. It is hard to conceive upon what principle Koehler could be charged as being guilty of laches in failing to appear and defend against the averments of the cross-petition when nothing was being claimed against him. As we view it, the judgment against Koehler upon the claim of the receiver is not supported by the pleadings, and the showing and petition of Koehler, so far as they relate to the proceedings of C. C. White, the receiver, were sufficient to warrant the court in vacating the judgment.

Besides, the cross-petition appears to be verified on May 23, 1892, and, while there is nothing in the present record to disclose the date on which it was filed, it is fair to presume that it was not filed until after the date of verification. The answer day of the summons served on Koehler was May 9, 1892. It is well settled that a party made defendant in an action and duly served with process is charged with notice of whatever answer any of his co-defendants may file only when such answer is filed within the time required by law. Arnold v. Badger Lumber Co., 36 Neb. 841, 55 N. W. 269; Havermeyer v. Paul, 45 Neb. 374, 63 N. W. 932.

In the plaintiff's petition, however, there was a distinct allegation charging the defendant Koehler with liability, and praying for judgment against him for any deficiency which might exist after the mortgaged premises were sold. Every issue now tendered and sought to be litigated could have been litigated in the case of Reed v. Penraud, and no doubt would have been had Koehler exercised ordinary diligence, and informed himself of the nature of the suit he was summoned to defend. He was duly served with process of the pendency of the suit, and was bound to take notice of the claims which were made against him. Having failed to avail himself of the opportunity afforded him by law, he will not now be permitted to say that he had a perfect defense to the action, and that the allegations in the petition were in point of fact untrue.

The question here presented has been before this court on a number of occasions, and in no case has relief been granted where the party seeking it had been guilty of negligence in interposing his defense in the original action. The following quotations from our own court will suffice to show how strictly the rule has been adhered to.

In Horn v. Queen, 4 Neb. 11, this court quoted with approval from Leiby v. Hiers of Ludlow, 4 Ohio, 493, as follows: "Before a court of chancery will order a cause to be reheard at law, they will require the complainant to show that he used due diligence in preparing and conducting his defense at law, and that he was prevented from then making it by circumstance beyond his control," and added: "We think this is clearly the law that a party must have done all that he could under the circumstances, that he had not been negligent, and that he must show that he has a defense to the action."

In Young v. Morgan, 13 Neb. 48, 31 N. W. 1, it is said: "The rule is well settled that

equity will afford no relief against a judgment to a party who has purposely or negligently omitted to make his defense at law."

In Pope v. Hooper, 6 Neb. 178, it is said: "In an original action in equity to vacate a judgment or decree if the ground of complaint is not the result of fraud on the part of the plaintiff or some circumstance beyond the control of the defendant, but is occasioned by the fault, negligence, or want of ordinary diligence on the part of the defendant, he will not be permitted to deny the correctness of the judgment or decree or to renew the controversy." The same ruling is adhered to in Osborne v. Gehr, 29 Neb. 661, 46 N. W. 84.

In Norwegian Plow Co. v. Billivar, 47 Neb. 193, 66 N. W. 292, 31 L. R. A. 747, this language was used: "A court of equity will not interfere because of fraud alone, but the person aggrieved must make it appear that a good reason existed why the defense was not interposed in the original suit."

In Bankers' Life Ins. Co. v. Robbins, 53 Neb. 44, 73 N. W. 269, it was held that a person was not entitled to an injunction to restrain the enforcement of a judgment unless he makes it appear, both from his pleadings and proof, "(1) that he has a meritorious defense to the cause of action on which the judgment is based; (2) that he has no adequate remedy at law; and (3) that his plight is in no wise attributable to his own neglect."

In Funk v. Kansas Mfg. Co., 53 Neb. 452, 73 N. W. 931, it is said: "It is well settled that equity will not relieve a party against a judgment on account of his own negligence or that of his attorney."

In Cleland v. Hamilton Loan & Trust Co., 55 Neb. 13, 75 N. W. 239, a number of authorities are collated, and this language is used: "It is an inflexible rule that a party seeking relief in equity from a judgment taken against him by default must exhibit a defense to the action, and also show that such judgment is the result of fraud, accident, or mistake, unmixed with fault or negligence on his part. A judgment will not be set aside on the application of a party who has by his own laches failed to avail himself of an opportunity to defend. This salutary rule rests upon principle and authority, and its rigid enforcement is necessary for the repose of society by preventing litigation from becoming interminable."

The same rule is adhered to in Munro v. Callahan, 55 Neb. 75, 75 N. W. 151, 70 Am. St. Rep. 366, and City of Broken Bow v. Broken Bow Water Works, 57 Neb. 548, 77 N. W. 1078.

From these observations it follows that the court should have vacated and set aside the judgment rendered against Koehler in favor of White, receiver, and in failing to do so erred.

As to the judgment in favor of Emily M. Reed, executrix, Koehler has failed to bring himself within the rule entitling him to equitable relief. He has offered no leg cuse for his failure to defend in the o action. We therefore recommend th judgment of the district court in the of Reed v. Penraud et al. be reversed far as it relates to the personal judgme dered against Koehler upon the cross p of C. C. White, receiver, and affirmed far as it relates to Emily M. Reed, exe

HASTINGS and KIRKPATRICK, C cur.

Judgment accordingly.

SHELBY v. CREIGHTON.

(Supreme Court of Nebraska. Jan. 8, 1

ERROR — REVERSAL — FINDINGS — CON — CONSTRUCTION — PRESUMPTIONS—A ISTRATOR—PURCHASE OF HEIR'S INT —REFORMATION OF CONTRACT.

1. A plaintiff in error must show affirm that error was committed, and that he w titled as a matter of law to a different ment or order from that complained of.

2. Where the findings show a narrow bility than that enforced by the judgm the court, or show no liability, and the ment enforces one, or in any other way crepancy between the findings and judgn presented which no possible state of the ings could justify, modification or revers be had upon a record showing such f and judgment only.

3. But where the ground of complaint the findings of themselves would entit plaintiff in error to more relief than was ed, a record containing the findings and ment only is insufficient to procure modif or reversal, since the prayer of the petitio have been more limited than the relie ranted by the facts alleged and found.

4. If a contract is so broad in its la as to cover matters of which the parties ignorant, equity may confine its applicat the real purposes of the bargain.

On Rehearing.

5. Where the evidence is not preserved, transcript of the pleadings is not presen will be conclusively presumed in the ap court that the findings of fact of the trial are true.

6. An administrator occupies a fiducia lation to the heir of his intestate, and by contract with the heir, such admini purchases the heir's interest in the real of his intestate, the transaction will be scrutinized by a court of equity. Howe the transaction is in good faith and without fraud, it may be treated as transactions between strangers.

7. Where, in such case, the contract b tual mistake is made to convey more tha intended or in the contemplation of the thereto, a court of equity may reform th tract to conform to the intention of the p

Commissioners' Opinion. Departmen 2. Error to District Court, Douglas C Scott, Judge.

"Not to be officially reported."

Action by Mary B. Shelby against Jo Creighton. Judgment for defendant, plaintiff brings error. Affirmed.

¶ 6. See Executors and Administrators, v Cent. Dig. § 622.

Digitized by Google

Wm. D. Beckett and J. W. Woodrough, for plaintiff in error. Woolworth & McHugh, for defendant in error.

POUND, C. The record before us contains only the decree of the lower court. Error is assigned upon the decree itself, the plaintiff in error seeking to secure its modification, to quote from the brief of counsel, so as to make it "conform to and be consistent with itself." We have no doubt that there are cases where a decree on its face is so erroneous that the court would reverse or modify it upon mere view thereof, without further record. Thus, if there were findings that a conveyance was made to a bona fide purchaser for value, with no notice of fraudulent intent on the part of the vendor, followed by a decree that it be set aside as fraudulent, or a finding upon an accounting that the one party owed the other $1,000, followed by a decree awarding the latter $2,000, our duty would be clear. No pleadings and no record of any kind beyond the decree itself would be necessary to enable us to say, beyond peradventure, that the decree was erroneous and required reversal or modification. But it does not follow that every case of inconsistency or discrepancy between the findings and the decree demands such action at our hands. The decree must not only conform to the findings, but it must be in accordance with the pleadings as well. If, for example, the petition prays judgment for $1,000, and the court finds that $2,000 are due, its judgment for the former sum is not erroneous. In such a case, if the decree alone came before us, surely we should not allow any presumption that the plaintiff had prayed for all that was due him to move us to interfere with a legal and proper judgment. One has only to glance at the reports to see that remittitur is ordered frequently because a plaintiff has failed to demand all that a court or jury found he might have claimed. A plaintiff in error must do more than show possible error. He must show clearly that the judgment or order complained of is and must be erroneous, and that he was entitled as a matter of law to a different ruling. To show that the findings of the court, of themselves, would permit or even require more relief than was granted, is only to show a possibility of error. Before we can say that there was error, we must see the pleadings, and ascertain that they would allow the full measure of relief required by the findings. If the findings show a narrower liability than that enforced by the decree, the case is otherwise, for no pleading of any sort can justify recovery of more than the court finds to be due. Counsel have attempted with much ingenuity to reconstruct a petition from the several findings of the court, and we may admit that the findings indicate to a high degree of probability the kind of petition they claim to have presented. But we do not think their conclusion irresistible. It is a principle of not infrequent application that where a contract is so broad in its language as to cover matters of which the parties were ignorant, equity may confine its application to the real purposes of the bargain. Farewell v. Coker, 2 Meriv. (Eng.) 353; Ramsden v. Hylton, 2 Ves. (Eng.) 304, 309; Lumley v. Wabash R. Co., 76 Fed. 66, 22 C. C. A. 60. This principle may have been the basis of the prayer of plaintiff's petition. The decree is in complete accordance with it, and the facts found are such as to call it into operation. It is true the court makes findings consistent with a prayer of much wider scope. We do not regard this as conclusive. It is by no means uncommon for courts to go beyond the issues in their findings, nor is it impossible for able counsel to overlook matters of great moment in the prayer of their pleadings. The most that can be said is that the decree in question presents a strong appearance of error. It is not necessarily erroneous, and its true character can only be known to those who have access to a petition as to which we can but conjecture. A similar case was before this court in Calmelet v. Sichl, 54 Neb. 97, 74 N. W. 407.

It is recommended that the decree be affirmed.

OLDHAM and SEDGWICK, CC., concur.

Affirmed.

On Rehearing.

(Nov. 6, 1902.)

Commissioners' Opinion. Department No. 1.

KIRKPATRICK, C. This case is brought to this court upon error from Douglas county, and a reversal is sought of a decree of the district court modifying in part a contract made between Joseph Creighton and John A. Creighton, who were brothers, for the sale of certain lands inherited from Edward Creighton, a deceased brother. An officially unreported opinion was filed in this case at a prior term of this court (January 8, 1902), and, upon application of plaintiff in error, a rehearing was allowed. The only record brought to this court consists of the findings and decree of the trial court, the record containing neither a bill of exceptions nor a transcript of the pleadings. In this condition of the record the only question which can be determined is whether the judgment is in accordance with the findings, and whether the several parts of the decree are consistent with each other. The trial court found that on the 5th day of November, 1874, Edward Creighton died without issue and intestate, seised of certain premises, only a portion of which are described in the decree, leaving as his heirs at law two brothers and the children of a deceased brother. It further appears from the findings of the trial court that John A. Creighton, defendant in error, was appointed administrator of his brother's estate, and that he filed an inventory of his broth-

estate in the probate court of Douglas county, from which was omitted, apparently by mistake, a large tract of land situated in Douglas county. It further appears by the findings that John A. Creighton, as administrator, purchased from his brother Joseph the latter's undivided interest in all the lands of which his brother died seised, paying therefor the sum of $30,000. It appears that Joseph Creighton executed deeds of conveyance covering his share of the lands, so far as the property was at that time known, and that he also agreed in writing to convey his interest in any lands that might subsequently be discovered. This agreement he seems to have carried out, dying many years thereafter, leaving plaintiff in error, a daughter, as his sole heir at law. The trial court further found that Joseph Creighton, at the time he entered into the contract with his brother John A., was of sound and contracting mind, and that he had full information of all the lands of which his brother died seised, except the tract which had been omitted from the inventory, and that John A. Creighton was guiltless of all fraud or undue means in procuring the contract with Joseph.

The trial court adjudged that the title to the land which was not described or included in the inventory did not pass to John A. Creighton, but remained the property of Joseph, or his heir, plaintiff in error, and decreed that John A. Creighton held the title to such lands in trust for plaintiff in error, and by the decree he was directed to convey such lands to plaintiff in error.

It is contended on the part of plaintiff in error that John A. Creighton held a fiduciary relation to Joseph Creighton, and that, occupying this relation, he was forbidden to make the purchase mentioned, and that his failure to describe the inventory was a fraud which vitiated and voided the entire contract; and, further, that the trial court, having sustained this contention as to the land omitted from the inventory, should have set aside the conveyance as to all other lands. The failure of the trial court to take this action is the only error assigned or complained of.

We are utterly unable to determine, from the fragment of the record brought to this court, the nature of the pleadings filed by plaintiff in error, or what relief was demanded. We have no means of knowing whether plaintiff in error sought a rescission of the entire contract, or merely sought a reconveyance of that portion of the property omitted from the inventory, as not being within the knowledge or contemplation of the parties when the contract was made. It may be conceded that certain findings of the trial court tend to give color to the theory of plaintiff in error that the petition sought a rescission of the entire contract, and it is upon this theory that counsel for plaintiff in error base their contention that the trial court, in avoiding the contract as to the property not discovered in the inventory, should have voided the contract in toto because of the fiduciary relation subsisting between vendor and vendee. But we are firmly of the opinion that any such inference, seemingly warranted by some of the language employed by the trial court, would fall far short of that affirmative showing of error required by the well-settled rule in this court that error must affirmatively appear, and cannot be aided by presumptions.

We are well aware that transactions such as that under consideration, occurring between administrator and heir, are subjected to close scrutiny by the courts, and if tainted by fraud or concealment, however slight, will be set aside. But in the case at bar it must be conclusively presumed that there was no fraud on the part of John A. Creighton, the absence of fraud being found as a matter of fact by the trial court. We have, then, this situation: Two parties capable of contracting, one the administrator, the other the heir; a contract between them by which the heir conveys his interest in a large amount of propery to the administrator, and the latter pays a large sum of money for such interest; a finding from which it may be inferred that both parties labored under a mistake as to certain property owned by the vendor or heir; and a decree of a court of equity that the title to the undiscovered property passed to the vendee in trust, and was so held by him for the benefit of his vendor's heirs, with directions to the vendee to convey such property to the vendor's heir.

The contention of plaintiff in error is that the relief actually granted by the trial court under this state of facts is tantamount to a finding that the contract between these brothers, the one heir and the other administrator, was per se void, because it is found that there was an omission from the administrator's inventory of a portion of the deceased brother's estate; that this omission, without reference to the manner in which it occurred, must be held to vitiate the contract in toto. We do not think the rule goes to the extent contended for. In the absence of all fraud, misrepresentation, or intentional concealment, as in this case, a transaction like that under consideration may be permitted to stand as similar transactions between persons sustaining the relation of strangers to each other. And if by mistake the grantor conveyed more than was in the contemplation of either party, it would seem that equity has power to conform the contract to the intention of the parties thereto, directing a reconveyance of that portion not intended to be conveyed. In Story, Eq. Jur. § 154, it is said: "Courts of equity have not hesitated to entertain jurisdiction to reform all contracts where a fraudulent suppression, omission, or insertion of a material stipulation exists, notwithstanding to some extent it breaks in upon the uniformity of the rule as to the exclusion of parol evidence to vary or control contracts, wisely deeming such cases to be a

proper exception to the rule, and proving its general soundness." Pomeroy (3 Eq. Jur. § 1376), in discussing the same subject, says: "This subject has already been treated under the head of mistake, and little more need be said. Equity has jurisdiction to reform written instruments in but two well-defined cases: (1) Where there is a mutual mistake; that is, where there has been a meeting of minds—an agreement actually entered into—but the contract, deed, settlement, or other instrument in its written form does not express what was actually intended by the parties thereto."

So, in the case at bar, we cannot see why the trial court could not properly and correctly find that the real contract entered into between Joseph and John A. Creighton was that the former should sell, and the latter buy, the interest of Joseph in his deceased brother's real estate, so far as that interest was at the time known to them; and that, John A. having by the conveyance succeeded in getting possession of an additional amount of property, not within the contemplation of either party to the contract, and at the time unknown to Joseph, he should in equity be required to reconvey such additional property either to Joseph or his heirs. And the trial court, having power to enter such a decree, it must be presumed, in the absence of a transcript, that such decree was properly entered upon the pleadings. We have given a careful consideration to the question presented, and cannot say that error affirmatively appears in the record before us.

It is therefore recommended that the former opinion be adhered to, and that the judgment of the trial court be affirmed.

DAY and HASTINGS, CC., concur.

Former opinion adhered to.

UPTHEGROVE v. JONES & ADAMS COAL CO.

(Supreme Court of Wisconsin. Sept. 8, 1903.)

MASTER AND SERVANT—INJURY TO SERVANT — MINOR — KNOWLEDGE OF DANGER — ASSUMPTION OF RISK—CONTRIBUTORY NEGLIGENCE.

1. Where a minor servant, under the circumstances of his employment, ought to have known and comprehended the danger from certain uncovered cogwheels while attempting to work a valve on an engine he was employed to fire, he assumed the risk of injury therefrom.

2. Plaintiff was employed to fire an engine connected with a coal hoist, a part of his duties being to keep the boiler filled with water. On the occasion of his injury he attempted to fill the boiler with the injectors, but, finding that they would not work, he took a loose valve wheel, about three inches in diameter, went to the front of the engine, and placed the loose wheel on a cold air valve pin, which was located just over a system of cogwheels connected with the hoist, for the purpose of forcing air into the boiler in order to fill the same by suction. On closing the valve the loose wheel slipped off the pin, and plaintiff's hand was caught in the gearing and injured. *Held*, that the loose wheel, though small, was sufficient, from its weight, to bear plaintiff's hand downward while taking it off the pin, and that plaintiff's failure to exercise ordinary care to resist such downward tendency constituted contributory negligence barring a recovery.

Appeal from Circuit Court, Ashland County; John K. Parish, Judge.

Action by Thomas Upthegrove, by his guardian ad litem, against the Jones & Adams Coal Company. From a judgment in favor of plaintiff, defendant appeals. Reversed.

This action was commenced May 31, 1902, to recover damages for personal injuries sustained by the plaintiff July 20, 1900, while in the employ of the defendant as fireman on two small engines used in connection with derricks in hoisting coal from the boats to the defendant's coal dock in Ashland. Issue being joined and trial had, the jury, at the close of the trial, returned a special verdict to the effect (3) that the plaintiff was injured while engaged in operating the injector and cold-air valve on the defendant's derrick, (4) under the defendant's direction, (5) at a place unnecessarily dangerous to the defendant's employés; (6) that the uncovered gearing in which the plaintiff was injured was so located as to be dangerous to such employés while in the performance of their duties; (7) that the plaintiff, in the exercise of ordinary care, ought not to have known that the cogwheels meshed downward at the time of the injury; (8) that the plaintiff had not sufficient experience in the business in which he was engaged to comprehend the dangers incident to such work or employment; (9) that he had not been sufficiently instructed or cautioned by the defendant to enable him to comprehend and understand such danger before the accident; (10) that the plaintiff was in the exercise of such care at the time of the accident as an ordinarily prudent and careful person of the same age, understanding, and experience would have used; (11) that the defendant was guilty of negligence in operating its machinery in its then condition at the place where the plaintiff was injured; (12) that such negligence was the proximate cause of such injury; (13) that they assessed the plaintiff's damages at $3,600. From the judgment entered upon such verdict for the amount stated and costs, the defendant brings this appeal.

The facts are practically undisputed, and to the effect that the plaintiff was 18½ years of age at the time he was injured, and had just finished his junior year in the high school; that he was 5 feet 7 inches in height, and weighed about 145 pounds at the time of the trial; that he had been a fireman off and on in a steam-heating plant for several years; that he had worked for the defendant 40 days the previous season at the same kind of work that he was doing when injured—firing engines used in operating coal derricks—and had worked for the defendant

Digitized by Google

for 20 days immediately before he was injured; that the hoisting machinery used in connection with each of the derricks was in a little room 12 feet long and 8 feet wide, with a roof 10 feet high at the back end and 14 feet high at the front end, and that the front end was entirely open and the other three sides inclosed without windows; that in this room there were several gears and considerable other machinery; the gearing in which the plaintiff's hand was caught drove all the machinery in that derrick; that when a bucket of coal was hoisted to the proper height the derrick swung around, the little house and all of the machinery going with it, and when the coal was dumped the whole thing swung back; that it took about 30 seconds to swing the derrick half way around in this manner; that a person on the derrick, not accustomed to the motion, would have to hang on to something to preserve his balance; that a derrick hoists 25 or 30 buckets an hour, and the engine and hoisting machinery stop and start from 20 to 180 times an hour; that the plaintiff was injured about 20 minutes after 5 o'clock in the afternoon of July 20, 1900, while operating a cold-air valve with a loose wheel on a pin, which wheel was about 6 inches above beveled-geared cogs meshing downward; that the diameter of the cogwheels was 12 inches and the diameter of the little wheel on the valve was 3 inches; that such machinery was located in a derrick used for hoisting coal from boats to the dock; that there were four such derricks, and the plaintiff was hurt on one of them; that these derricks were about 10 feet above the dock, situated on trestles with four wheels on each derrick, which ran on tracks about 15 feet apart; that there was a platform about 2½ feet above this beveled gear, and a chair on the top of this platform, in which the engineer sat; that on the right-hand side of this cold-air valve, facing the opening in the building, was located a big drum, on which the wire cable coiled; that on the left-hand side was located the wooden platform, laid over with boards, upon which was a chair where the engineer sat; that the cog gearing was about 8 feet back from the open end of the building; that the plaintiff's duties were to keep up fire, keep water in the boiler, sweep out and oil the machinery; that he had to do such work in two of the derricks, including the one on which he was injured; that the boxes and shafts he oiled every morning, some times at noon; that he handed the oil can to the engineer, and he oiled the cogs or gearing from where he sat; that the engineer told the plaintiff to put some grease on this gear with a stick, and he did, but did not put on enough, and so the engineer took the stick and put on more; that the place where the plaintiff oiled the shafts was from 4 to 5 feet from this cold-air valve; that while the plaintiff was putting on the grease the machinery was stationary; that he only did that once; that he used the injectors at the boiler 20 or 30 times a day; that used the cold-air valve 3 or 4 tim to the time he was hurt; that the valve was only used when the would not work; that the wheel on t was loose; that in opening the cold-a it was necessary to take the wheel nail where it hung, and put it on and then open the valve a little, a as soon as the air started sucking, the cold-air valve again, and then, not suck so the water could be hea ning, to shut off the cold-air valv with a quick jerk; that such was the engineer showed the plaintiff work the valve; that while working air valve it was necessary to wa steam gauge on the boiler, so that t of the water would be heard, and be known to be going all right; plaintiff knew where to oil the ma without being instructed; that he swe sionally the year before; that the asked for this job in the season of 1 received a man's wages for his wor he knew of the existence and of th location of this gearing some time he was caught in it, having greased sisted in greasing and oiling it bef time; that he had seen the defenda ployés take the gearing apart; that place where the plaintiff stood when injured the gearing could be plain that he understood that, if he got in the gearing, it would be crushed; knew that, if he got his hand in t ticular gearing, it would be crushed; knew that, if he got his hand betw cog wheels, it would be crushed; knew that the little wheel which sli the spindle and let his hand drop gearing was not fastened to the spind he himself had chiseled out the ey other wheel to make it fit on the spin it was the slipping of this wheel f spindle that caused the accident.

The plaintiff testified to the ma which he was injured to the effect the time he was injured he was t make the cold-air valve work; that been down on the track below the and got up in the derrick, and th was about time to put some water boiler, and so he looked at the ga saw it needed water, and then he run it through the injector, and the was bucking; that he did not kno was the matter with it, and so over and tried to turn on the cold-ai that he left the two valves that the boiler, and went round on the l side of the engine, and walked round and stepped in under the big arm t into the derrick; that there was rod that ran out about three feet f platform; that he walked in front engineer, and stepped over that the little place about a foot and

Digitized by Google

square, situated about six inches from the cogwheels into which the cogs of the drum mesh; that when he reached that place he took the little wheel off the nail and put it on to the pin, and then turned it once, and it started sucking, and then he shut it off, and the injector then would not work and he kept on turning it; that there was something the matter with it, it would not work, and he kept on turning it, and finally the wheel came off the pin and his hand dropped down and went into the gearing and he was injured; that the machinery was stationary when he went in there; that in going in he passed right in front of the engineer, within a foot of him; that he did not know when the machinery started up; that he did not know that the machinery had started up until he was injured; that he did not have any previous knowledge as to which way the cogwheels meshed; that he did not understand that there was any danger in operating that cold-air valve in the way it was operated; that he did not realize any danger himself, and the engineer had never cautioned or spoken to him about it; no one had cautioned him about any danger; that the gearing on which the plaintiff was injured was uncovered, and could have been covered so as not to interfere with the working of the machine.

Lamoreux & Shea, for appellant. Sanborn & Sanborn, for respondent.

CASSODAY, C. J. (after stating the facts). Four errors are assigned upon which we are asked to reverse the judgment in this case. The one particularly relied upon is the refusal of the court to grant a nonsuit or direct a verdict in favor of the defendant. This is based upon the ground that it appears from the undisputed evidence that the plaintiff assumed the risk and was guilty of contributory negligence. Counsel for the plaintiff insists that that is the only debatable question presented on this appeal. He, moreover, concedes that, if that question is decided adversely to the plaintiff, then that the judgment should be reversed, with directions to dismiss the complaint. The facts upon which the respective parties base their contentions are presented in the foregoing statement. They need not be here repeated. The age and experience of the plaintiff with the machinery of that kind was such as not to require further instruction than was in fact given as to the danger of getting his hand into the cogwheels while running. In that respect he must be held to the same responsibility as a man of mature years. He testified to the effect that he knew, if he got his hand in this particular gearing, it would be crushed; that, if he got his hand between the two cogwheels, it would be crushed; that he understood that, if he got his hand in the gearing, it would be crushed; that he had seen the defendant's employés take the gearing apart; that he knew of the existence and of the exact location of this gearing for some time before he was caught in it; that from the place where he stood when he was hurt such gearing could be plainly seen; that he was injured while operating the cold-air valve with a loose wheel on a pin which wheel was three inches in diameter and about six inches above the beveled-geared cogs meshing downward; that the cold-air valve was only used when the injectors would not work; that he had only used it three or four times prior to the injury; that the wheel on this valve was loose, and it was necessary to take it off the nail where it hung and put it onto the pin, and then turn it back and forth; that the engineer had showed him how to work the valve. He necessarily knew that the little wheel was not fastened to the spindle, and was liable to slip off; and he testified that when the wheel came off the pin his hand dropped down and went into the gearing, and he was injured. True, the plaintiff testified that he did not know that the cogwheels meshed downward, nor just when the cogwheels started. But they were liable to start at any time. "This court has repeatedly held that the true test as to whether a minor has assumed the ordinary risks of his employment, or is guilty of contributory negligence, is not whether he in fact knew and comprehended the danger, but whether, under the circumstances, he ought to have known and comprehended such danger. Luebke v. Berlin M. Works, 88 Wis. 442 [60 N. W. 711, 43 Am. St. Rep. 913]; Craven v. Smith, 89 Wis. 126 [61 N. W. 317]; Casey v. C., St. P., M. & O. R. Co., 90 Wis. 113 [62 N. W. 624]; Herold v. Pfister, 92 Wis. 417 [66 N. W. 355]; Klatt v. N. C. Foster L. Co., 92 Wis. 622, 627 [66 N. W. 791]; Roth v. S. F. Barrett Mfg. Co., 96 Wis. 615 [71 N. W. 1034]; Larson v. Knapp, Stout & Co. Company, 98 Wis. 178 [73 N. W. 992]. It has also been repeatedly held that, where it appears from the undisputed evidence that the defect or danger is open and obvious, and such as, under the circumstances, ought to have been known and comprehended by the plaintiff, then he will be held to have assumed the risk as a matter of law." Helmke v. Thilmany, 107 Wis. 216, 224, 83 N. W. 360, 363. See, also, Sladky v. Marinette Lumber Co., 107 Wis. 250, 261, 263, 83 N. W. 514; Kreider v. The Wis. River Paper & Pulp Co., 110 Wis. 645, 659, 86 N. W. 662; Muenchow v. Zschetzsche & Son Co., 113 Wis. 8, 88 N. W. 909. After careful consideration we are forced to the conclusion that the admitted facts bring the case within the rule stated. The little wheel was small, but the plaintiff necessarily knew that, unless he resisted the tendency, its weight was sufficient to bear his hand downward while putting it on or taking it off the pin. His failure to exercise ordinary care in that

Digitized by Google

respect was contributory negligence. The view we have thus taken of the case makes it unnecessary to consider other questions presented in the brief of counsel for the defendant. We must hold that the answers to the seventh, eighth, ninth, and tenth questions are contrary to the undisputed evidence, and that the trial court should have granted the motion of the defendant to change the answers to the first three of those questions from the negative to the affirmative, and to change the answer of the tenth question from the affirmative to the negative, and, when so changed, to render judgment thereon in favor of the defendant and against the plaintiff, dismissing the complaint, and for costs. This is in accordance with the repeated rulings of this court. Stafford v. Chippewa Valley Electric R. Co., 110 Wis. 331, 362, 85 N. W. 1036, and cases there cited; Zahn v. M. & S. R. Co., 114 Wis. 38, 43, 89 N. W. 889; and cases there cited.

The judgment of the circuit court is reversed, and the cause is remanded, with directions to change the verdict as indicated, and, when so changed, enter judgment thereon in favor of the defendant and against the plaintiff, as mentioned.

WARD et al. v. AMERICAN HEALTH FOOD CO.

(Supreme Court of Wisconsin. Sept. 8, 1903.)

ADVERTISING CONTRACT — CONSTRUCTION — CONTRACT FOR SERVICES—PERFORMANCE—BREACH WHILE EXECUTORY — DAMAGES — PLEADING—ISSUES AND PROOF.

1. Where, in an action to recover on an advertising contract which provided that it should continue for the term of 12 months from July 10, 1900, the court found as a fact that plaintiffs commenced performance thereof June 19, 1900, and continued up to and including July 10, 1901, a finding that the contract was fully executed by plaintiffs on July 10, 1900, was manifest error.

2. Where an advertising contract, which was to continue for 12 months from July 10, 1900, authorized defendants to discontinue the same at the expiration of 1 month on payment of the monthly contract price and $92.50 additional on defendants' giving notice to plaintiffs of their election to terminate, a finding that a letter written by defendants to plaintiffs and received on August 24, 1900, asking plaintiffs to inform defendants when their month expired, and directing cancellation of the contract 30 days from the extended date of the contract for the present, did not operate to cancel the contract in the absence of a payment of the additional compensation, was proper.

3. Defendants contracted with plaintiffs to place their advertising cards in certain railway cars in a manner provided from June 19, 1900, up to and including July 10, 1901. The contract also provided that "nonuse of space from advertiser's act or omission was the advertiser's loss." *Held*, that the contract did not constitute a sublease of space which had been let by the owners of the cars to plaintiffs, but was a contract for plaintiffs' personal services, and was, therefore, executory until the date provided by the contract for its termination.

4. Where defendants contracted with plaintiffs for certain advertising to be placed in railroad cars for a period of 12 months, the contract being executory before termination of the contract period, defendants were entitled to stop further performance on plaintiffs' part and limit their further liability for remaining period to damages sustained from breach of the contract.

5. Defendants contracted with plaintiffs for certain advertising to be placed by plaintiffs in certain railroad cars for a period of 12 months. On the expiration of 2 months and 17 days defendants directed plaintiffs to remove the cards, which they failed to do, and after the expiration of the 12 months brought suit to recover the contract price, alleging full performance. *Held*, that defendants' notification constituted a breach of the contract, and hence, under the complaint, plaintiffs were not entitled to recover damages accruing therefrom, but could only recover the contract price for the 2 months and 17 days during which the contract was performed prior to the breach.

Appeal from Circuit Court, Milwaukee County; Lawrence W. Halsey, Judge.

Action by Artemus Ward and others against the American Health Food Company. From a judgment in favor of plaintiffs, defendant appeals. Reversed.

Two actions are here consolidated, each to recover different installments claimed to be due to the plaintiffs from the defendant upon the same written contract. It is undisputed: That the plaintiffs are copartners doing business in the city of New York, and that the defendant is a Wisconsin corporation doing business in Milwaukee. That June 5, 1900, Isaac J. Cohn, the soliciting agent of the plaintiffs, was in Milwaukee at the defendant's office, and a written proposition was then and there drawn up and signed by the defendant in the words and figures following, to wit:

"June 5th, 1900.

"To Ward & Gow: You are hereby authorized to insert in the cars designated on the reverse side hereof, 1,050 copies of our advertising card size 11x21 inches each, one in each car up to that number, for the term of 12 months, from July 10th, 1900.

"In consideration thereof we hereby agree to pay to the order of Ward & Gow, the sum of four hundred and seventy dollars ($470) per month—the rent each month to be paid in advance at end of each month. Signs to be furnished by the advertiser.

"The advertiser reserves the right to cancel this contract on Aug. 10, 1900, by paying $92.50/100 additional, and giving notices in writing prior to August 10th.

"This contract is not binding unless approved by Ward & Gow. All payments must be made to their order. If any cash installment, provided for herein, is due and unpaid for ten days, this contract may be terminated at their option. If for any cause before the termination of this contract the lessees of any of the car spaces herein included shall cease to have the right to maintain, control or continue the advertising in or upon the cars of any railroad named therein, the right is reserved by Ward & Gow to cancel such portion thereof without prejudice to the whole. The form, wording and illustrations of all signs is subject

Google

to their approval and that of the railroad company in whose cars they appear. Nonuse of space from advertiser's act or omission is advertiser's loss. Any loss of time or space not caused by the advertiser, shall be made good by additional time or space. An essential condition of this contract is that advertiser's privileges cannot be assigned or sublet. Nothing omitted herefrom binds either party.

"Approved June 8th, 1900.

"[Signed] American Health Food Co.

"John L. Beebe, V.-Pres.,

"Address 270 So. Water St.,

"Mil., Wis.

"Ward & Gow,

"By Louis Cohn, Manager.

"500 cars N. Y. 'L.'

"550 cars Brooklyn, N. Y.

"One-half of each road."

—That Isaac J. Cohn then took such written proposition so signed by the defendant to the city of New York, where the same was approved by the plaintiffs June 8, 1900, and stating therein that: "500 cars N. Y. 'L.'—550 cars Brooklyn, N. Y.—one-half of each road." On the same day of such approval the plaintiffs wrote to the defendant acknowledging the receipt of the contract, and therewith inclosed a duplicate of the same, duly approved by the plaintiffs. November 17, 1900, the plaintiffs commenced an action to recover the first four installments of $470 each, amounting to $1,880, and the complaint therein alleged, in effect, that the plaintiff had in all respects complied with the terms and conditions of the contract, and had inserted 1,050 copies of the advertising card of the defendant, size 11x21 inches, one-half in the N. Y. "L," and one-half in the Brooklyn Railway Company; that such insertions commenced July 10, 1900, and continued from that date, and was still being continued; that the defendant had not exercised its right reserved in the contract to cancel the same by giving notice in writing prior to August 10, 1900, and that such contract had not been modified, but was in full force and effect, and that the four installments mentioned became due and owing to the plaintiffs November 10, 1900, and were still due and owing from the defendant to the plaintiffs, and demanded judgment therefor, with interest on each installment from the time it became due. August 30, 1901, the plaintiffs brought a second action for the eight additional installments of $470 each, amounting to $3,760. The complaint in that action contained, in substance, all the allegations of the complaint in the first action, and, in addition, alleged that the plaintiffs had contracted for advertising space in the elevated street railways mentioned, and several others; that no part of any of such installments had been paid, although demanded; and demanded judgment therefor, with interest on each installment from the time it became due. The defendant answered the consolidated actions by way of admissions, denials, and counter allegations, and, among other things, in effect, denied the making of the contract as alleged, denied that the plaintiffs had complied with the contract, denied that the defendant had not canceled the contract or modified it, and alleged that the contract so made was for three months only and by mistake it named twelve months, that the time of the commencement for the contract was postponed for some time after July 10, 1900 (named therein), that it was canceled after it had been commenced one month; and also alleged by way of counterclaim a mistake in making the contract in the respects mentioned, and asked to have the same reformed. The plaintiffs replied to the counterclaim. A jury having been waived, the cause was tried by the court, and at the close of the trial the court found, in addition to the admitted facts mentioned, in effect, that June 12, 1900, the defendant sent the plaintiffs 1,050 cards to be placed as agreed; that June 19, 1900, the cards were received by the plaintiffs, and thereupon the plaintiffs placed or inserted 500 of such cards in the N. Y. "L" and 550 in the Brooklyn Elevated, and continued the insertion of such cards in the manner provided for in the contract from June 19, 1900, up to and including July 10, 1901, and that the plaintiffs had in all respects complied with the terms and conditions of the contract; (6) that the defendant did not exercise the right to cancel the contract; that the $92.50 additional therein mentioned was not paid by the defendant to the plaintiffs on August 10, 1900, and that no notice in writing was given by the defendant to the plaintiffs of its intention to cancel the contract prior to August 10, 1900; (7) that the contract so made was not changed or modified in any respect; (8) that at the time of signing the contract the officers of the defendant knew that Isaac J. Cohn was acting in the capacity of solicitor, and was without authority to make or accept the said contract on behalf of the plaintiffs; (9) that, subsesequent to the acceptance of the contract by the plaintiffs, no representation was made by them to the defendant that Isaac J. Cohn had any authority other than that possessed at the time the contract was entered into; that Isaac J. Cohn was not authorized by the plaintiffs to make, modify, or in any manner change the contract between the plaintiffs and the defendant; (10) that no agreement was made by Isaac J. Cohn on behalf of the plaintiffs or otherwise with the defendant, or any person acting on its behalf, whereby the terms of the written contract between the plaintiffs and the defendant were changed or modified in any manner or in any respect; (11) that the contract above set forth was the contract actually made and entered into by the plaintiffs and the defendant, and that no other or differen-

contract was made between the parties, and that there was no mutual mistake in reducing the contract to writing, and that the contract was for the term of 12 months as stated therein; (12) that no part of the consideration provided for in the contract has been paid to the plaintiffs by the defendant; (13) that September 27, 1900, the defendant directed the plaintiffs, in writing, to remove from all cars their cards which had been inserted pursuant to the terms of the contract; that the plaintiffs refused to remove said cards; that at no time from July 10, 1900, up to and including July 10, 1901, could the plaintiffs get contracts to fill such space, notwithstanding they made due and diligent effort to obtain contracts in order to fill all the spaces under and controlled by them in such elevated roads; (13½) that August 24, 1900, the plaintiffs received a letter from the defendant dated August 22, 1900, stating, "Kindly let us know when our month expires, and cancel the contract 30 days from the extended date of the contract for the present;" (14) that all the allegations of the complaint in both actions are proven and true; (15) that the equitable counterclaim of the defendant has not been proven and is untrue. And as conclusions of law, the court found, in effect, that the contract was fully executed by the plaintiffs; (2) that there was due to the plaintiffs for principal $5,640, and for interest $491.62, making $6,131.62; (3) that the prayer for the reform of the contract be, and the same was thereby, denied; (4) that the plaintiffs are entitled to judgment dismissing the equitable counterclaim, and for a money judgment against the defendant for the amount last stated, with costs; and ordered judgment accordingly. From the judgment so entered the defendant brings this appeal.

Winkler, Flanders, Smith, Bottum & Vilas, for appellant. Bloodgood, Kemper & Bloodgood, for respondents.

CASSODAY, C. J. (after stating the facts). Error is assigned because the court found as a matter of law that the contract "was fully executed by the plaintiffs on the 10th day of July, 1900." That is the day named in the contract upon which the plaintiffs were to commence performance; and the contract expressly provides that it should continue "for the term of twelve months from July 10, 1900." By the fifth finding of fact the court found that the plaintiffs commenced such performance June 19, 1900, and continued such performance "up to and including the 10th day of July, 1901." Manifestly, by some inadvertence, the wrong year is named in the conclusion of law mentioned. At all events, such conclusion cannot overturn the language of the contract and the express finding of fact mentioned. In other words, the plaintiffs have recovered in this action the $470 per month for doing the things they agreed to do in the contract during the whole of the twelve months which terminated July 10, 1901.

2. Counsel for the defendant contend that the time when the performance was to commence under the contract—July 10, 1900—was, on or about that time, indefinitely postponed by correspondence and oral negotiations between defendant and Isaac J. Cohn, the soliciting agent of the plaintiffs in procuring the contract from the defendant. By the eighth, ninth, and tenth findings the court found, in effect, not only that Isaac J. Cohn never made any such agreement, but also that he never had any authority to make such an agreement, and that the defendant knew that he was merely "acting in the capacity of solicitor, and was without authority to make or accept the contract on behalf of said plaintiffs." Such findings of the court are abundantly supported by the evidence.

3. In and by the terms of the contract, the defendant reserved the right to cancel the contract August 10, 1900, by paying $92.50 additional, and giving notice in writing prior to August 10, 1900. Both complaints allege that the defendant failed to exercise such reserved right. The defendant took issue with such allegations, and alleges, in effect, that the "contract was duly annulled, discontinued, and canceled by due and sufficient notice in writing given by the defendant to the plaintiffs in due time and before the end of the first month." By the sixth finding the court found that the $92.50 was not paid by the defendant to the plaintiffs August 10, 1900; that no notice in writing was given by the defendant to the plaintiffs as therein agreed; and that the defendant had not exercised its reserved right to cancel the contract as therein stipulated. Such findings are abundantly supported by the evidence. It follows that the letter received by the plaintiffs from the defendant August 24, 1900, wherein they were told to "kindly let us know when our month expires, and cancel the contract thirty days from the extended date of the contract for the present," as mentioned in finding 13½, did not have the effect of relieving the defendant from further liability on the contract.

4. The defendant insists by way of counterclaim that there was a mutual mistake in reducing the contract to writing, in that it should have been "for the term of three months from July 10, 1900," as actually made, instead of "for the term of twelve months from July 10, 1900," as written; and prayed a reformation of the contract accordingly. Such counterclaim was put in issue by the reply. The court, by the fifteenth finding, found that such counterclaim had not been proved, and was untrue; and the evidence fully supports such finding.

5. The complaint in the consolidated action alleges, and the court found, in effect, that the plaintiffs had inserted the defend-

Digitized by Google

ant's cards, and continued the insertion of such cards in the manner provided for in the contract, from June 19, 1900, up to and including July 10, 1901, and that the plaintiffs had in all respects complied with the terms and conditions of the contract on their part. The court further found, in effect, that September 27, 1900, "the defendant directed the plaintiffs, in writing, to remove from all cars their cards which had been inserted pursuant to the terms of the contract," but that "the plaintiffs refused to remove" the same. The defendant contends, in effect, that, as the contract was executory at the time such direction was given by the defendant, the giving of such direction had the effect to stop further performance on the part of the plaintiffs, and limit its further liability to damages sustained for the breach of the contract. On the other hand, the plaintiffs contend, in the language of the conclusion of law mentioned, "that the contract * * * was fully executed by the plaintiffs on the 10th day of July, 1900," the day on which, by its terms, it was to go into effect, notwithstanding the findings of fact that the defendant's cards were to be so inserted in cars by the plaintiffs "for the term of twelve months from July 10, 1900." Other stipulations in the contract show that the services of the plaintiffs were to continue for the whole year; and the complaint alleges, and the court found, that such services did so continue from June 19, 1900, "up to and including the 10th day of July, 1901." Such finding would seem to be conclusive that at the time the defendant directed the plaintiffs "to remove from all cars their cards which had been inserted pursuant to the terms of the contract"—September 27, 1900—the contract was still executory for the balance of the year. But the plaintiffs further contend that the contract was fully executed July 10, 1900, because prior to that date they had procured the insertion of the requisite number of cards in the cars of the two railways as agreed, and that, by the terms of the contract, "nonuse of space from advertiser's act or omission is advertiser's loss," and hence it is argued that the defendant was bound by the contract to pay for the spaces so procured by the plaintiffs, whether the defendant used them or not. The argument is plausible; but the real question is whether the nature of the contract is such as prevented the defendant from stopping further performance on the part of the plaintiffs by the direction given September 27, 1900, "to remove from all cars their cards," as mentioned. It appears from the evidence that no particular space in particular cars was secured by the plaintiffs. As late as September 10, 1900, they wrote to the defendant as follows: "Please forward us at once 250 cards, size 11x21, as we need same for display in the box cars in Brooklyn which will shortly be placed in service." That request was renewed September 22, 1900, "for a requisite number of cards for equipping the box cars of the Brooklyn Heights Railroad." The defendant, under date of September 24, 1900, replied by stating: "That, as we have canceled our advertising with you for the present, you will not need any cards for the box cars of the Brooklyn Heights Railroad. When we renew our cards in your cars later in the fall, we will send new cards enough to cover all of the cars that we will use." These letters obviously have reference to the necessary change from open cars to winter cars. The theory that the plaintiffs had procured such "spaces" from the railways by leases or otherwise, and then released or sublet them to the defendant, cannot be maintained. "A lease is a contract for the possession and profits of land and tenements on the one side and the recompense of rent or property on the other." 18 Am. & E. E. Law (2d Ed.) 597. Here the defendant never had any possession or right to the possession of such cars, or any part of any of them. Reynolds v. Van Beuren, 155 N. Y. 120, 123, 49 N. E. 763, 42 L. R. A. 129. The case is peculiar, and it may be difficult to find adjudications in cases where the facts are similar. It has been held in New York that "a contract whereby one person gives another the authority, for a stated compensation, merely to use a wall of a house for advertising purposes during a specified time, does not constitute a lease, so as to create the relation of landlord and tenant between the parties." Goldman v. N. Y. Advertising Co. (Sup.) 60 N. Y. Supp. 275. So it has been held in Massachusetts that "an agreement by the lessee of a building to allow a third person, in consideration of an annual payment by him, to place a sign upon the outside wall of the building for a stated time, is not a breach of a covenant in the lease not to underlet any part of the premises." Lowell v. Strahan, 145 Mass. 1, 12, 12 N. E. 401, 1 Am. St. Rep. 422. So it has been held in Maryland that "a contract to display advertisements in a street car, the cards being subject to the approval of the advertising company," as here, "is one in which the other party relies upon the skill and experience of the company in making such displays, and hence is not assignable by the latter." Eastern Advertising Co. v. McGaw (Md.) 42 Atl. 923. In other words, it was there held that the contract was for personal services, and not even a license, much less a lease. We must hold that when the defendant directed the plaintiffs to remove its cards, September 27, 1900, the contract remained executory for the balance of the year.

6. Being executory, did the defendant have the right, by giving such direction, to stop further performance on the part of the plaintiffs, and limit its further liability to damages sustained for the breach of the contract, as claimed by the defendant? Certainly there are numerous adjudications to that effect. Courts differ as to whether an action

Digitized by Google

can be maintained for such breach before the time for the fulfillment of the agreement transpires. The McCall Co. v. Icks, 107 Wis. 232, 83 N. W. 300; Hochster v. De La Tour, 2 Ellis & Black, 678. But that question is not here involved, since the time for such fulfillment had fully expired when the last action was brought. In the case last cited it was held by the Queen's Bench, Lord Campbell, C. J., presiding, "that a party to an executory agreement may, before the time for executing it, break the agreement either by disabling himself from fulfilling it, or by renouncing the contract." That rule was followed by the Supreme Court of the United States in a learned and discriminating opinion by Fuller, C. J., reviewing the English and American cases, and it was there, among other things, held "that, after the renunciation of a continuing agreement by one party, the other party is at liberty to consider himself absolved from any future performance of it, retaining his right to sue for any damages he has suffered from the breach of it. * * * The parties to a contract which is wholly executory have a right to the maintenance of the contractual relations up to the time for performance, as well as to a performance of the contract when due. As to the question of damages, when the action is not premature, the plaintiff is entitled to compensation based, as far as possible, on the ascertainment of what he would have suffered by the continued breach of the other party down to the time of complete performance, less any abatement by reason of circumstances of which he ought reasonably to have availed himself." Roehm v. Horst, 178 U. S. 1, 20 Sup. Ct. 780, 44 L. Ed. 953. So in an early case in New York, the party who had employed another person to do certain mechanical work at a price agreed upon, and, after the work had been commenced, countermanded his directions, and forbid the person so employed to further execute the work; and it was held that the person so employed had no right to proceed with the work after he was so forbidden. Clark v. Marsiglia, 1 Denio, 317, 43 Am. Dec. 670; American Life Ins. Co. v. McAden, 109 Pa. 399, 1 Atl. 256. So it has been held in Vermont that "in executory contracts a party has the power to stop the performance on the other side by an explicit order to that effect, by subjecting himself to such damages as will compensate the other party for being stopped in the performance on his part at that point or stage in the execution of the contract." Danford v. Walker, 37 Vt. 240, followed in Davis & Rankins v. Bronson, 2 N. D. 300, 303, 304, 50 N. W. 836, 16 L. R. A. 655, 33 Am. St. Rep. 783; Gibbons v. Bente, 51 Minn. 500, 53 N. W. 756, 22 L. R. A. 80. In such cases it is held that an action cannot be maintained to recover the contract price, but may be maintained to recover damages for the breach of the contract. Hamilton v. McPherson, 28 N. Y. 72, 76, 77, 84 Am. Dec. 330; Butler v. I 77 N. Y. 472, 33 Am. Rep. 648; John Meeker, 96 N. Y. 93, 97, 48 Am. Rep McMaster v. The State of N. Y., 108 542, 15 N. E. 417; Hinckley v. Pit Steel Co., 121 U. S. 264, 7 Sup. Ct. 8 L. Ed. 967. And yet in such an acti party seeking to recover for the bre the contract is in duty bound to mak sonable exertions to keep down the da Id. See, also, Roper v. Johnson, L. R P. C. 167; Brown v. Muller, L. R. 7 Cas. 319, s. c. 23 E. R. C. 527–530, and

7. But this is not an action to recove ages by reason of such breach of co As indicated, this is an action to recov contract price on the theory of full pe ance. Such is the only cause of act leged in the complaint. True, some ev was admitted having a bearing upon question of damages, but such evidenc so admitted against objections that i inadmissible under the pleadings. A breach of the contract is the gist of su action, it is necessary that the compla lege the particular breach; otherwise be demurrable. A failure to allege breach cannot be cured, even by v This is elementary. 4 Ency. Pl. & P 938, citing numerous cases; Abbott's Ev. (2d Ed.) 634, and cases there cite such cases the plaintiff is not entit prove a breach of contract not allege damages of a kind not necessarily re from the breach of contract allege proved, unless they are specifically sta the complaint. Id. Thus it is stated of the works cited that: "The dama be recovered upon an alleged breach tract need not be averred where th the necessary result of the breach con ed of, but a full recovery may be had the general allegation of damages complaint." 5 Ency. Pl. & Pr. 739. " other hand, where the damages do not sarily result from the breach of the c alleged, they must be specially plead order that the defendant may not be by surprise at the trial. And in cas damages are not specially pleaded, in ance with this rule, evidence in regard to will be excluded at the trial, a plaintiff will be confined to his genera ages." Id. 741–743. It follows from wh been said that so much of the thirteent ing as bears upon such damages and is upon such improper evidence must be garded. The damages thus referred course, only include such, if any, as the tiffs may have sustained by reason o being prevented by the defendant fro forming the balance of the contract.

8. But the plaintiffs had fully per the contract on their part for 2 mont 17 days before the defendant directed to remove its cards from the street question. For such partial performanc are certainly entitled to recover the c

Digitized by Google

price. The price so stipulated in the contract is $470 per month, to be paid at the end of each month. There is nothing in the contract that can authorize a division of such monthly installment. The result is that the plaintiffs are entitled to recover only three monthly installments under the contract, with interest on each installment from the time it became payable by the terms of the contract. For the aggregate amount of such installments and interest they are entitled to judgment in this action.

The judgment of the circuit court is reversed, and the cause is remanded, with direction to enter judgment in favor of the plaintiffs and against the defendant for the amount indicated in this opinion.

CASSODAY, C. J. When this case was decided, May 20, 1903, the question as to the amount of costs which the plaintiffs were entitled to recover was considered by the court, and it was then held that the plaintiffs were only entitled to recover such costs as were allowable under the statutes in actions at law on contract. The failure to consider the question in the opinion filed was the fault of the writer.

LANG v. MENASHA PAPER CO.

(Supreme Court of Wisconsin. Sept. 8, 1903.)

MECHANICS' LIENS—STATEMENT—FILING—CONTRACT—PERFORMANCE—TIME—REASONABLE TIME.

1. A contractor's attorney prepared a claim for a mechanic's lien, as required by statute, and sent the same to the clerk of the circuit court, with directions to file same, and send his bill therefor to such attorney. The clerk acknowledged receipt of the claim, and by a letter written to the attorney stated that his fee therefor was 35 cents, but made no demand for payment thereof, and the fee was not paid until June 21, 1902; the claim remaining in the clerk's office from May 22, 1902, until July 10th, the date of the trial of an action brought to foreclose same. *Held* that, since the clerk made no demand for payment of the fee as a condition to filing the claim, as authorized by Rev. St. 1898, § 748, the claim should be regarded as filed on the date of its receipt, prior to the commencement of the action to foreclose the same, as required by section 3321.

2. Where a contract for the construction of a certain foundation fixed no time for the completion of the work, the work must be completed within a reasonable time.

Appeal from Circuit Court, Gates County; John K. Parish, Judge.

Action by Robert A. Lang against the Menasha Paper Company to foreclose a mechanic's lien. From a judgment in favor of plaintiff, defendant appeals. Affirmed.

This action was commenced May 27, 1902, to enforce a lien for labor and materials furnished to the defendant in the excavation for, and construction of, the foundation walls and foundation for a pulp mill, between October 16, 1901, and March 1, 1902, pursuant to an express contract in writing made by the plaintiff and the secretary of the defendant, October 16, 1901, as follows: "October 16, 1901. It is agreed between R. A. Lang and M. H. Ballou that R. A. Lang build a foundation according to plans submitted, including floors for pit, for the sum of $8,000. [Signed] R. A. Lang. M. H. Ballou"—which agreement was subsequently modified by parol, whereby the plaintiff undertook and agreed, in consideration of an additional payment of $500, to excavate one foot deeper than shown by such plans, and to add one foot to such foundation walls. The complaint alleges the making of such contract; that no part thereof had been paid, except $3,500; that there was still due the plaintiff thereon $5,000, with interest from March 1, 1902; and that the plaintiff's claim therefor had been filed with the clerk of the circuit court May 23, 1902. The defendant answered to the effect that the plaintiff ought reasonably to have completed the work on or before December 15, 1901; that the plaintiff failed and neglected to perform the contract with all reasonable dispatch, and did not complete it until March 1, 1902, to the defendant's great damage, and alleges such failure and neglect by way of counterclaim, and alleges that its expenses and loss in consequence thereof was at least $84 per day, amounting, in all, to $5,208, and asked that the same be offset as a counterclaim against any sum due from the defendant to the plaintiff on the contract, and for judgment in his favor for the balance. The plaintiff replied to such counterclaim, and alleges, among other things, in effect, that there was no provision in the contract as to when it should be completed; that the plaintiff commenced the performance of the work immediately after the contract was made; that such work was prosecuted with all reasonable diligence, and completed within a reasonable time; that defendant made payments on such contracts from time to time with full knowledge of all the facts, and the progress being made, and, on completion, accepted the same, and has ever since used the same for the purposes for which it was erected; that on or about January 1, 1902, the defendant refused to make further advances, or pay for the work then completed, and then for the first time claimed that the work was not being prosecuted as rapidly as desirable, and claimed damages on account of the delay; that the plaintiff replied that such failure to make advances and payments, as agreed, would necessarily delay completion of the work; that the plaintiff informed the defendant that he would only perform with the express understanding and agreement that full contract price would be paid for performance, without any deduction for pretended damages by reason of delay; that the defendant thereupon directed the plaintiff to proceed with the work, and thereafter made payments; and the plaintiff claimed that by reason of the facts alleged the defendant was estopped from claiming damages by reason of such delay. At the close of the trial the court found, in effe (1) That all the allegations of the compl

---

¶ 2. See Contracts, vol. 11, Cent. Dig. §§ 947, 948.

Digitized by Google

were true. (2) That October 16, 1901, the parties entered into the written contract mentioned. (3) That the contract was subsequently modified, as stated. (4) That the plaintiff fully performed all the conditions of such agreements. That by reason of the peculiar conditions of the soil necessary to be handled in the excavation of such additional foot, the plaintiff was unable to complete such work within the time in which both parties expected that the work would be completed at the time of making the original contract. (5) That prior to January 1, 1902, the defendant made claim against the plaintiff for damages because of such delay. That on that day the plaintiff notified the defendant that if he proceeded further with the performance of the contract, it would be with the understanding and agreement that no claim for damages should be made. That thereafter the defendant continued to direct the plaintiff to prosecute such work as vigorously as possible, and thereafter, and on January 30, 1902, paid to the plaintiff on the contract $2,000. (6) That the plaintiff performed the contracts and completed the same within a reasonable time from the making thereof. (7) That May 22, 1902, the plaintiff duly filed his claim for lien with the clerk of the circuit court. That the same was not docketed until June 21, 1902. That the fees of the clerk were paid by the plaintiff before the trial of this action. That no demand was made therefor by the clerk. (8) That the first work done and materials furnished under the terms of the contract by the plaintiff was October 23, 1901, and that the date of the last charge for such work, labor, and materials was March 5, 1902. (9) That the defendant paid to the plaintiff on the contracts $3,500, as stated, and there still remains due and unpaid thereon $5,000, with interest thereon from March 5, 1902, and that the same is a lien on the premises mentioned. (10) That the premises described belong to the defendant, and are not within the limits of any incorporated village or city, and do not exceed 40 acres of land. (11) That the allegation in the counterclaim that the plaintiff did not push and prosecute the work in the contracts, as agreed, is untrue. (12) That the allegation in the counterclaim that the work could reasonably have been completed on or before December 15, 1901, is untrue. (13) That the allegations in the counterclaim to the effect that the defendant sustained damage because of failure on the part of the plaintiff to complete his contracts within a reasonable time is untrue. (14) That the allegations in the reply to the counterclaim are true. And as conclusions of law the court found, in effect, that the defendant is not entitled to set off as against the contract price for the work and labor performed and materials furnished by the plaintiff any sum on account of any damages claimed by reason of the facts set forth in the counterclaim; that the plaintiff is entitled to recov defendant $5,000, with interest ther March 5, 1902, amounting, in the a to $5,104.17, with costs and disburse be taxed, and a judgment directing interest of the defendant in the pre scribed at the time of the comme of said work and the furnishing of terials, to wit, October 16, 1901, or son claiming under it since that tin much thereof as should be necessary to satisfy the amount of such lien a From the judgment entered thereon ingly, the defendant brings this app

Silas Bullard, for appellant.
Bundy & Wilcox, for respondent.

CASSODAY, C. J. (after stating th It is claimed that the plaintiff is tled to a judgment for a lien in thi for the reason that he failed to file for a lien, as prescribed by the stat after the commencement of the acti tion 3321, Rev. St. 1898. That sec thorizes "any person having" filed as prescribed by the previous sec "foreclose the same by action." Sect Id. Such filing of the claim is m a condition precedent to the right mence such foreclosure action. Th tually conceded by counsel for the It is claimed, however, that it was before the commencement of this a appears and is undisputed that a due form, as required by the stat signed by the attorneys for the plai petitioner, was sent to the clerk of cuit court, with direction to file t and send his bill therefor to such a that May 22, 1902, the clerk recei claim, and acknowledged the receipt as requested, by letter addressed to torneys, dated on the day and year tioned, and stating therein, in eff such "claim for a lien in favor o A. Lang v. Menasha Paper Compa been "duly received for filing," and fee therefor was 35 cents; that t made no demand for the payment fees, and the same were not paid u 21, 1902; that such claim for a lien in the office of the clerk from May to the trial of the cause, July 10, was not docketed by the clerk u 21, 1902. The statute requires the docket "each claim for lien filed immediately upon its filing." Secti Rev. St. 1898. In the language of Brother Pinney: "The statute prov both filing and docketing the claim, are entirely different things. The quires the party to file his claim fo and the clerk is to docket it." Goo Baerlocher, 88 Wis. 298, 60 N. W. Am. St. Rep. 893. Here the plaint ered his claim to the clerk to be fil office. It was for the clerk to put mark upon it, and to make the do tries. Neither of these things could

Digitized by Google

by the plaintiff, and the improper failure of the clerk to do them did not prevent the filing from being effectual. Id.; Bailey v. Costello, 94 Wis. 87, 91, 68 N. W. 663; State ex rel. Kaltenback v. Shiel, 114 Wis. 255, 90 N. W. 112, and cases there cited. In legal contemplation, the claim was filed when it was presented to the clerk to be filed, and retained by him as such clerk. Id. True, the statute authorized the clerk to "require his fees" for filing such claim "to be paid in advance." Section 748, Rev. St. 1898. But he made no such requirement; and, in the absence of such requirement, his duty was to put his file mark upon the claim, and docket the same. We must hold that the claim was filed May 22, 1902, within the meaning of the statutes.

2. It is conceded that the time for the performance of the contracts on the part of the plaintiff was not fixed or mentioned therein, but was left open and indefinite. It is well settled that when no time is mentioned in an agreement for the performance thereof, a reasonable time is to be regarded as being within the contemplation of the parties. Waterman v. Dutton, 6 Wis. 265; Nudd v. Wells, 11 Wis. 407; The Inter-Ocean Trans. Co. v. Sheriffs, 54 Wis. 202, 11 N. W. 480; Boyington v. Sweeney, 77 Wis. 55, 65, 45 N. W. 938, 941, and cases there cited. As stated by Mr. Justice Taylor in the case last cited: "What will in the particular case be a reasonable time depends upon the nature of the act to be done, the nature of the contract, and all the circumstances relating to the same;" in other words, it is largely a question of fact. The facts found by the trial court in the case at bar are amply supported by the evidence, and they fully justify the conclusions reached by that court.

The judgment of the circuit court is affirmed.

GAVITT v. MOULTON.

(Supreme Court of Wisconsin. Sept. 8, 1903.)

WILLS—ANIMUS TESTANDI—EVIDENCE—UNDUE INFLUENCE—REVOCATION—LOSS OF WILL—PRESUMPTION—REBUTTAL.

1. Testator directed his attorney to bring proceedings to eject his wife from testator's room, and told the attorney that he desired his will drawn, leaving certain small legacies to different people, and the balance to G. and his wife. The attorney drew the will in accordance with such instructions, and thereafter read it over to testator, in the presence of witnesses, and he expressed himself satisfied, and requested the witnesses to sign. The pecuniary legatees were nieces and nephews, and the residuary legatees were persons with whom the testator was very friendly. All of the subscribing witnesses testified that at the time of making the will testator was of sound mind. *Held*, that the evidence was sufficient to sustain a finding that testator had testamentary capacity at the time of executing the will.

2. Testator married contestant in 1897, when he was very old, and a little over a year thereafter became so estranged from her that he ordered his attorney to arrest her for breaking into his rooms. He thereafter made a will, by which he left certain small pecuniary legacies to nonresident nieces and nephews, and the residue of his estate to G. and wife, who were his particular friends, and whom he had visited on several occasions just prior to the making of the will. When testator was seriously ill, G. was called to him, but there was no evidence that he had anything to do with the making of the will, and testator, though he lived two years thereafter, took no steps to change the same. *Held*, that such facts were insufficient to show that the will was procured by undue influence on G.'s part.

3. In an action to establish a lost will it was shown that testator, in whose possession the will was last known to have been, was very careless about his papers, and that contestant, who was testator's wife, and had been disowned by him in the will, was present during several days prior to his death, during which time he was unconscious; and had access to his papers, which were in a scattered condition throughout his room. Thereafter contestant refused to deliver the papers taken from testator's room until an action was brought to recover the same. *Held*, that the evidence was sufficient to rebut the prima facie presumption of destruction of the will with the intention of revoking it, arising from the fact that the will was last known to be in testator's possession, and could not be found after his death.

Appeal from Circuit Court, Green Lake County; George W. Burnell, Judge.

Action by George Gavitt against Anna Moulton. From a judgment in favor of plaintiff, defendant appeals. Affirmed.

It appears from the record that August 1, 1900, George Gavitt presented to the county court for Green Lake county his verified petition stating, in effect, that H. C. Moulton, of Berlin, in that county, died July 8, 1900, leaving an estate therein to be administered; that the deceased left no children him surviving, and was never married; that he left the five persons therein named as next of kin and heirs at law of the said estate as therein mentioned; that the deceased left a will (the substance of which is therein stated), duly executed on or about September 12, 1898, which will was therewith presented, and propounded as his last will and testament by the petitioner as the executor named therein; that said will was lost or destroyed by design in the manner and under the circumstances therein stated; that one Anna Bachlinsky (Moulton), claiming to be the widow of the testator, as therein charged, in effect, destroyed the will after the death of the testator; that one H. R. Laing was appointed special administrator of said estate July 20, 1900, on the petition of this petitioner; that Laing thereupon demanded all papers belonging to the estate of and from the said Anna, but failed to get such will; that at the time of the death of the testator there was pending in the circuit court an action brought by him against said Anna to cancel an alleged fraudulent marriage certificate and the record of such marriage certificate; that the testator ordered said Anna, who was a person of ill repute, from his premises, and did what he could to keep her therefrom, and had her expelled by process of law and arrest; and said petition prayed that proof of the con-

Digitized by Google

tents of the will be taken, and the same proved and allowed as the last will and testament of said deceased, and letters testamentary thereupon be issued to said petitioner; that such proceedings were had upon such petition that an order, judgment, and decree was duly entered in the county court December 3, 1901, establishing, allowing, and admitting to probate such written instrument as the last will and testament of said deceased, and thereupon, and on December 12, 1901, the said Anna duly appealed therefrom to the circuit court.

The cause was thereupon tried in that court without a jury, and after the close of the trial and due consideration the court, on June 10, 1902, made and filed its findings, wherein it was found as matters of fact, in effect: (1) That H. C. Moulton died at the city of Berlin July 8, 1900. (2) That he was then an inhabitant and resident of that city, (3) and of full age and of sound mind. (4) That on or about September 10, 1898, at the city of Berlin, the said H. C. Moulton made and signed his will in writing in the form and manner provided by law. (5) That said instrument and will was at the time—September 10, 1898—duly attested and subscribed by Perry Niskern, B. F. Dobson, and Bert Wood, who were competent witnesses thereto, in the presence of the said H. C. Moulton and in the presence of each other, and the said H. C. Moulton at the time declared the same to be his will, and requested said witnesses above named to subscribe the same as subscribing witnesses; (6) and the same was in all things duly executed by the said H. C. Moulton as his last will and testament. (7) That he was not at the time under the undue influence of the proponent, George Gavitt, or any other person or persons, and that said will was so made and executed by him, the said testator, freely and voluntarily of his own motion, and was the expression of his own mind and will and desire. (8) That said will was never revoked, and was either lost by accident or destroyed fraudulently by design or fraudulently suppressed by some other person than the said H. C. Moulton previous or subsequent to the decease of the said H. C. Moulton. (9) That said will was last seen in the possession of the testator a short time and within about a month prior to his decease. (10) That the said H. C. Moulton was upwards of 80 years of age, careless in keeping his papers, and that just before his death he became unconscious, and so remained for several days prior to his death. (11) That during the time he was so unconscious the said Anna, claiming to be the wife of the said H. C. Moulton, had access to his papers and the rooms where he was then lying unconscious, and that the papers were then in a scattered condition throughout his room, part of them being on the floor and scattered throughout the room, and that the said Anna immediately after his deat moved part of said papers of said dec from his rooms, and refused to return to the special administrator until com to do so by direction of her attorney th after a suit had been begun against h the said special administrator for that pose. (12) That not long before his the said H. C. Moulton had declared to persons that his will was so execut aforesaid, and as to different persons d ing it to be his will, but that on a sear what papers could be found after his de being the papers recovered of the said —said will could not be found, and the appears to have been lost by accident by the said H. C. Moulton just prior death, or to have been soon after his destroyed by design or concealed by other person. (13) The court further that the provisions of said will were lows, to wit:

"I, H. C. Moulton, of Berlin, Green County, Wisconsin, make, publish and d this my last will and testament, hereby ing all other wills by me made.

"1st. After the payment of my debt funeral expenses, I give, devise and beq to Mrs. Helen Van Kaughnet of Turin. County, N. Y., the sum of one hundre lars, to be paid to her out of my estate.

"2d. I give, devise and bequeath to Moulton Riggs of Turin, Lewis County, the sum of one hundred dollars.

"3d. I give, devise and bequeath to Riggs of Turin, Lewis County, N. Y., th of one hundred dollars.

"4th. I give, devise and bequeath to C. W. Coulton of Booneville, Oneida Co N. Y., the sum of one hundred dollars.

"5th. I give, devise and bequeath to Mary Berry of Waukegan, Ill., the su one hundred dollars.

"6th. All the rest, residue and rema of my estate both real and personal, I devise and bequeath to George Gavitt Miriam Gavitt, his wife, of Chicago, County, Illinois, to be equally divide tween them.

"7th. I hereby nominate and a George Gavitt as the executor of thi last will, and I ask that no bond be r ed of him by any court having the p ing of the will.

"Whereas, one Annie Bachinsky is claiming to be my wife, I take this oc to say that I was never married to any other woman.

"Witness my hand and seal this 10t of September, 1898.

"H. C. Moulton. [S

"The above instrument consisting o and one-half pages of legal cap writin on the day of the date thereof, to wit: 10, 1898, signed, published and declar the said testator, H. C. Moulton, i presence to be his last will and tests

Digitized by Google

and we at his request and in the presence of each other have subscribed our names thereto as subscribing witnesses.

"Perry Niskern.
"B. F. Dobson.
"Bert Wood."

And as conclusions of law, the court finds, in effect: (1) That said will has been duly proved and established as the last will and testament of the said H. C. Moulton, and should be established, allowed, and admitted to probate as such last will and testament of said H. C. Moulton, deceased; (2) that the judgment of the county court should be affirmed in whole, and that the record should be remitted to the county court for further proceedings in the administration and settlement of said estate; (3) that the proponent should recover his costs and disbursements in this proceeding to be taxed, and such judgment for costs be docketed in the office of the clerk of the circuit court, and enforced as the judgment of that court in the manner provided by law. Thereupon judgment was entered in the circuit court in favor of the proponent, George Gavitt, and against the contestant, Anna Moulton, in accordance with such findings of fact and conclusions of law, and for $109.58 costs. From such judgment the said Anna Moulton brings this appeal.

Bouck & Hilton, for appellant. Perry Niskern, for respondent.

CASSODAY, C. J. (after stating the facts). The statute gives to the county court "power to take proof of the execution and validity" of "any will of real or personal estate" which has been "lost or destroyed by accident or design," and "to establish the same." Section 3791, Rev. St. 1898. "The petition for the probate of such will" must, however, "set forth the provisions thereof." Id. That was done in the case at bar. "The same power" is thereby given to "the circuit court" "in an action brought for that purpose." Id. Of course, the fact that such will is not in existence, and cannot be produced, makes it necessary to prove its contents by secondary evidence. Everitt v. Everitt, 41 Barb. 385; Southworth v. Adams, 11 Biss. 256, 260, Fed. Cas. No. 13,194. Such statute is in aid of the common law, and the proof of such contents may be made as at common law. Harris v. Harris, 26 N. Y. 433; In re Kennedy's Will, 167 N. Y. 172, 60 N. E. 442; 19 Am. & Eng. Ency. L. 563; Hall v. Allen, 31 Wis. 691. There is no question here but what the contents of the will were sufficiently proved. The attorney who drew it testified to its contents substantially as found by the court. His testimony is corroborated to some extent by the testimony of each of the other subscribing witnesses. So the formal execution of the will is sufficiently proved, and seems to be conceded. The probate of the will, however, is contested on three grounds. To appreciate the questions presented, a general outline of the situation seems to be necessary. The testator had resided in Berlin for many years as a bachelor. He occupied three rooms over a store. When he was well, he took his meals at the hotel, and when he was sick, or did not feel well, his meals were brought to him. His principal business was loaning money on mortgage security, shaving notes, etc. He had no blood relatives nearer than nephews and nieces, and they lived in New York and Illinois. The contestant, Anna, had been married to one Bachinsky several years ago, but was divorced from him some nine or ten years before the trial of this action, and he subsequently died. After the divorce she returned to Berlin, where she formerly lived. Mr. Moulton kept company with her before she was married to Bachinsky; and again and for several years after her divorce. During that time, or a portion of it, she lived in a house belonging to Mr. Moulton. September 20, 1897, they were married by a justice of the peace in Milwaukee county, who issued his certificate to that effect, with two subscribing witnesses. At the time of such marriage Mr. Moulton was over 81 years of age. After such marriage she continued to occupy the house, the same as before, and he continued to occupy the rooms over the store, the same as before; but he made frequent visits to her at the house, and she visited him at the rooms. A little more than a month after such marriage, and on October 25, 1897, Mr. Moulton made his will, thereby purporting to give all his property to "his beloved wife," Anna. It appears that September 7, 1898, Mr. Moulton had an attack of apoplexy, and became unconscious for a little time; that on September 9, 1898, his mind was still in a dazed condition, but was better—not unconscious—and became clear-headed, but remained in bed, although he was able to talk and take nourishment and answer questions put to him; that was on September 9, 1898. On September 10, 1898, he was up all day, or the most of the day, and his mind was sound during that day. On that day he sent for his attorney, who went to Mr. Moulton's rooms, and found him there, up and dressed, sitting in a chair in the middle of the room; that he pointed to Anna, who was also there, and said she was claiming to be his wife, and it was all wrong, and he wanted him to get her out at once, and thereupon Mr. Moulton made an affidavit before a court commissioner for the arrest of Anna for unlawfully and wrongfully and by force and arms breaking into his rooms and doing damage therein. On that same day he requested his attorney to draw his will, saying to him that he wanted to leave some small legacies to different persons whose names he would furnish, and the balance of his estate he proposed to give to Mr. George Gavitt and his wife; that he

Digitized by Google

sequently received the memorandum in evidence, and drew the will, and the same was executed, as found by the trial court, about 5 o'clock on the afternoon of that day. As indicated in the foregoing statement, that will contains this clause: "Whereas, one Anna Bachinsky is now claiming to be my wife, I take this occasion to say that I was never married to her or any other woman." October 8, 1898, Anna filed her verified petition for the appointment of a guardian for Mr. Moulton by reason of his alleged incompetency to do business. October 28, 1898, Mr. Moulton commenced an action against Anna to set aside and cancel the marriage certificate mentioned, and the record thereof, made September 29, 1898. The contestant, Anna, answered the complaint in that action, and alleged, among other things, that whatever secrecy there had been in respect to such marriage had been at the request of Mr. Moulton. That cause was still pending when Mr. Moulton died. It appears that after the will was so executed, and on September 13, 1898, the attorney who drew it sealed it up in an envelope and indorsed thereon, "The last will of H. C. Moulton," and filed the same in the county court. August 14, 1899, Mr. Moulton withdrew the will from the county court, and told the attorney that he wanted to keep the will, but no person ever saw the will itself afterwards. In November or December, 1899, Moulton showed the attorney the sealed envelope with the indorsement thereon—that he showed it to him several times. January 24, 1900, Moulton and another made a very thorough search for the will through the safe, the green box, the secretary, and papers, but could not find it. Moulton thereupon told his attorney that he had lost the will, and wanted him to draw another will like the former will, and stated the substance of it; but that afterwards, and in April or May, 1900, Moulton told his attorney that he had found the will, and again showed him the envelope said to contain the will. After the execution of his will and until he died he remained feeble. July 3, 1900, Mr. Moulton was again taken sick. He was nervous, his right arm hanging down by his side, and he remained in a comatose condition until he died July 8, 1900. It appears from the inventory of the special administrator that the value of the whole estate was less than $7,000. The probate of the will is contested upon three grounds:

1. Want of mental capacity on the part of H. C. Moulton to make a valid will at the time the will in question was executed. The requisite mental capacity to make a valid will has frequently and recently been stated by this court. In re Will of Downing, 95 N. W. 876, 879. A restatement of one quotation there made is sufficient for the present purpose. "It is essential that the testator has sufficient capacity to comprehend perfectly the condition of his property, his relations to the persons who were or should or might have been the objects of his bounty, and the scope and bearing of the provisions of his will." Id. The undisputed evidence in the case at bar brings it within the rule stated. The testator sent for his attorney, and directed him to do certain things in respect to the contestant, Anna, mentioned in the foregoing statement of facts, and thereafter told him that he wanted his will drawn; "that he wanted to leave some small legacies to different people," but that he could not just then state their names, "and the balance of his estate he proposed to give to Mr. George Gavitt and his wife," and that he would give him "instructions as to the names later," and he did; and the attorney drew the will "in accordance with his instructions, and in accordance with the names so far as they were concerned." After the will was so drawn, the attorney read it over to Mr. Moulton in the presence of the other two subscribing witnesses, and he expressed himself as being satisfied with it, and that it was all right, and declared that it was his will, and signed the same in their presence, and requested the subscribing witnesses, including the attending physician, to subscribe their names thereto as such witnesses, which they did in his presence and in the presence of each other. All three of the subscribing witnesses testified that, in their opinion, Mr. Moulton was at the time of executing the will of sound mind; and the testimony of the attorney who drew the will, as to its contents, was corroborated to some extent by the other two subscribing witnesses. Counsel for the contestant virtually concede that the evidence is sufficient to sustain the finding of the court that Mr. Moulton was of sound mind at the time of executing the will.

2. Nevertheless, counsel very properly contend that his weakened mental and physical condition should be considered in determining whether the will was procured by fraud and undue influence. As indicated by the facts stated, the circumstances were peculiar. He was an old man with no blood relations nearer than nephews and nieces, and they lived far from him. His relations with the contestant, Anna, were peculiar and unnatural. The evidence is to the effect that he was married to her at the time and place stated. But they continued to live separately, occupying different buildings, the same as before, and continued frequently to visit each other the same as before. The contestant concedes that the marriage had been kept secret at the request of Mr. Moulton. Manifestly, he became estranged from her prior to the execution of the will; and, as indicated in the statement, he forced her from his rooms, and took steps to have her arrested. That fact, and the fact that the nurse was excluded from the room when the will was executed, is referred to as evidence tending to prove undue influence. Regarding her as

Digitized by Google

the wife of the testator, as we must, on the evidence before us, still he had the legal right to make a will and leave her out. The important question is whether she was left out of the will by reason of fraud or undue influence practiced upon him by any person or persons? Was it by reason of importunities or flatteries which he was unable to resist? None of the subscribing witnesses were in any way interested in the particular disposition he should make of his property. The nurse who was excluded from the room had no interest in it. The mere fact that knowledge of the contents of the will was confined to the subscribing witnesses is no evidence that it was procured by undue influence. Vance v. Davis (Wis.) 95 N. W. 939, and cases there cited. Seemingly, there was no one near Mr. Moulton who could have had any motive to influence him to make the will in question, except Mr. Gavitt. He was no stranger to Mr. Moulton. They had known each other intimately ever since Gavitt's marriage 30 years prior to the trial of this action. Gavitt and his wife lived for many years in Berlin prior to 1886, and in that year moved to Chicago. Moulton had known Mrs. Gavitt ever since she was a small girl. While Gavitt lived in Berlin, their places of business were opposite each other, and Mr. Moulton would visit Gavitt's every day or evening. After Gavitt moved to Chicago, they kept up correspondence, and at one time, and during the World's Fair, Moulton went to Chicago, and visited at Gavitt's for a week. They had business relations for 20 years. Less than a month before he died, Mr. Moulton wrote to Mr. Gavitt as his "Dear Cousin George," thanking him a thousand times for a letter received a few days before, and telling him about his feeble condition, and closing with these words: "Please inform me the time or about the time you will again visit our Berlin friends. With brotherly love to yourself and cousin Minnie [Mrs. Gavitt] I am respectfully your cousin, H. C. Moulton." Friendly letters from Mr. Moulton to his nieces named in the will are also in evidence. Mr. Gavitt arrived in Berlin on the evening before the will was drawn, by reason of a long-distance telephone from a brother of the subscribing witness Wood, announcing that Mr. Moulton was sick, and they would like to have him come up. There is nothing strange or unnatural in the fact of his going to Berlin at that time, and there is no evidence that he exerted or attempted to exert any influence over Mr. Moulton to induce him to make the will in question; much less any undue influence. This court has defined "undue influence in such a case" as "such an influence that the instrument is not properly an expression of the will of the testator in regard to the disposition of his property, but rather an expression of the will of another person" (In re Will of Jackman, 26 Wis. 104); and that "motives of natural affection and gratitude on the part of the testator," even when accompanied by "solicitations or arguments which appeal to such motives, do not constitute undue influence" (Id.; Deck v. Deck, 106 Wis. 472, 473, 82 N. W. 293). "To establish undue influence sufficient to invalidate a will, it must be shown that the will of the testator was coerced into doing that which he did not desire to do." Wingrove v. Wingrove, L. R. 11 Prob. Div. 81. So long as the will truly expresses the wishes of the testator, there is no ground for claiming that it was procured by undue influence. Here it appears from the undisputed evidence that the will did express the wishes of the testator at the time it was executed. Three days prior to that time he had had an attack of apoplexy, and had been for a time unconscious. He naturally realized the seriousness of his condition, and the necessity of preparing for the result likely to follow. His feelings towards the contestant—Anna—had manifestly changed. Affection, or even friendship, had been superseded by hostility. To whom would he naturally leave his property under such circumstances? There is certainly nothing strange in the fact of his giving the bulk of his property to his particular friends Mr. and Mrs. Gavitt, and the balance to his nieces and nephews. He lived nearly two years after the execution of the will in question. If the will had in fact been procured by undue influence, then he would naturally have changed or revoked the will after such influence had been withdrawn or removed. Gavitt did not remain in Berlin after the execution of the will, but returned to his home in Chicago. If the will was not changed or revoked during that time, then it may be fairly inferred that it did truly express the wishes of Mr. Moulton when executed. We must hold that the finding of the court that the testator was not under the undue influence of Gavitt or any other person at the time the will was executed is sustained by the evidence.

3. The remaining question to be considered is whether the will was revoked by the testator. There is no pretense that it was ever revoked by any other will, codicil, or writing executed in the manner prescribed by statute. Section 2290, Rev. St. 1898. That section of the statute provides that a will may be revoked "by burning, tearing, canceling or obliterating the same, with the intention of revoking it, by the testator or by some person in his presence and by his direction." Id. There is no direct evidence that the will in question was ever burned, torn, canceled, or obliterated at all, much less that any such act was done to the will by the testator "with the intention of revoking it," or by any "person in his presence and by his direction." Counsel for the contestant contend that where, as here, it is established that the will was last known to be in the possession of the testator, and could not be found upon his death, it raised a prima facie presumption

Digitized by Google

that he destroyed it with the intention of revoking it, and that the burden of doing away with such presumption was upon the proponent. The proponent concedes such to be the law; and it undoubtedly is the law. "Upon this proposition the question is," as stated by counsel for the contestant, "does the evidence of the proponent do away with this prima facie presumption?" The will was in the custody of the county judge from the time it was placed there for safe-keeping by the attorney who drew it, September 13, 1898, until it was withdrawn therefrom by the testator, August 14, 1899. During those 11 months there is no pretense that he revoked it, or attempted to revoke it, or desired to revoke it. During that time he was apparently satisfied with the disposition which the will made of his property. There is no evidence that any one but the testator had the custody of the will after it was so withdrawn from the county judge. The testator lived about 11 months after the will was so withdrawn. The substance of the ninth, tenth, eleventh, and twelfth findings of fact are given in the statement. It appears from them that the testator was careless in keeping his papers; that he remained unconscious for several days immediately before his death; that the contestant had access to his rooms and papers while he was so unconscious; that the papers were then in a scattered condition throughout his room; that immediately after his death the contestant removed part of such papers from his rooms, and refused to return them until compelled to do so; that not long before his death the testator declared to divers different persons that his will was executed as stated, and was still his will; and the court further found as a fact that the will had been lost by accident, either by the testator just prior to his death, or to have been destroyed by design or concealed by some other person soon after his death. The evidence seems to warrant such findings. True, the mere fact that the contestant had an opportunity to destroy the will would not of itself overcome the presumption that it was destroyed by the testator with the intent to revoke it; still it is a circumstance to be considered with other proof. Thus it is stated by a standard text-writer that: "If a will last traced to the testator's custody cannot be found at his death, the presumption that he destroyed it for the purpose of revocation outweighs the probability of its fraudulent and criminal destruction by another when unsupported by any evidence except that of opportunity, though this latter circumstance is always worthy of consideration with other proof." Schouler on Wills (2d Ed.) § 402. To the same effect, Bauskett v. Keitt, 22 S. C. 187; Collyer v. Collyer, 110 N. Y. 481, 18 N. E. 110. Here there is much more than mere opportunity, as indicated by the facts stated. Besides, the evidence is ample to support the finding that the will was lost by accident. Whether it was lost by accident or destroyed by the design of others would be equally fatal to the contention of the contestant. The conduct and declarations of the testator show pretty clearly that he believed that he had possession of the will up to the time of his death. He showed the sealed envelope in which the will had been placed to his attorney in November or December, 1899. In the following January he missed the will, and on the 24th day of that month he made search for it, but was unable to find it. March 19, 1900, he told his attorney that he had lost his will, and that he would have to make another one just like it; and then stated the substance of the will, and that, if he did not find it, he was going to have it made over again the same way. In April or May he told his attorney that he had found his will, and showed him the sealed envelope in which it had been placed, and again showed it to him about the 1st of June. That such declarations of the testator were admissible on the question of the existence or nonexistence of such last will is abundantly supported by numerous adjudications. Southworth v. Adams, 11 Biss. 256, 260, Fed. Cas. No. 13,194; In re Steinke's Will, 95 Wis. 121, 70 N. W. 61; In re Valentine's Will, 93 Wis. 45, 55, 67 N. W. 12, and cases there cited. In the first of these cases the testator, while stopping with a stepdaughter at Whitewater, made his will, and retained possession of it. He was an old man, and careless about his papers. He resolved to visit relatives in Brooklyn, N. Y., and so bought a ticket and checked his trunk for that place. At the depot in Whitewater, and just before starting, he stated that his will was in his trunk. When he got to Chicago, he suddenly died. His trunk went on, and was finally stopped in Buffalo, and when returned to Chicago it was found to be open. A large open envelope was found therein, marked as containing his will, but no will was found therein nor in the trunk. In a learned and able opinion of Judge Dyer, the will was established as a lost will. Among other things, he there said: "In this class of cases it was at one time somewhat questioned whether secondary evidence of the existence and contents of a will is admissible, and whether the declarations of the testator concerning the will may be shown to establish its contents and the probability or improbability of its destruction by him. It is now, however, fully settled both in England and in this country that such declarations are admissible, and that secondary evidence may be resorted to for the purpose stated." The other cases cited are to the same effect. Such declarations showed an absence of any intention on the part of the testator to revoke his will. The presumption that he destroyed the will with such intent is fully overcome by the facts and circumstances in evidence. We find no reason for disturbing the judgment.

The judgment of the circuit court is affirmed.

Digitized by Google

BALDWIN v. BURT et al.

(Supreme Court of Nebraska. Jan. 8, 1902.)

APPEAL—LAW OF THE CASE—PROCESS—RETURN — IMPEACHMENT — JUDGMENT — COLLATERAL ATTACK — REVIEW — OBJECTIONS WAIVED.

1. The rule that a prior decision of this court in a given cause is the law of the case in all subsequent proceedings as to matters passed upon or involved in the decision does not apply to propositions of law upon which the members of the court taking part therein were equally divided.

2. It is the settled law of this state that a false return of service of process may be impeached by extrinsic evidence, and that where the attempted service fails to reach the party to be served in any way a judgment founded thereon is absolutely void and open to collateral attack.

3. The third subdivision of section 602, Code Civ. Proc., applies only to voidable judgments which are proof against collateral attack, and not to such as are absolutely void.

4. Where the plaintiff is seeking affirmatively to enforce a void judgment, one who merely resists is not governed by the rule requiring a party seeking relief against such a judgment to show a meritorious defense.

5. A judgment should be reversed only for errors which operate to the prejudice of the party complaining thereof. Hence the refusal of a court to perform an act which is purely nugatory, and without legal force or validity, ought not to be reviewed by this court, however informal or irregular the proceeding by which such refusal is expressed.

On Rehearing.

6. The provisions of section 602, Code Civ. Proc., apply to voidable, and not to void, judgments.

7. Where evidence of facts tending to impeach the validity of a judgment is presented to the trial court by affidavits, and no objection is made in the court below to the consideration of the affidavits because the judgment creditor has not had an opportunity to cross-examine witnesses, it is too late to interpose this objection after the case has been removed to this court upon appeal.

Commissioners' Opinion. Department No. 2. Appeal from District Court, Douglas County; Keysor, Judge.

"Not to be officially reported."

Action by Eunice Baldwin against Wellington R. Burt and Marion G. Rohrbough. Judgment for defendants, and plaintiff appeals. Affirmed.

Gaines, Kelby, Storey & Martin, for appellant. Byron G. Burbank, for appellees.

POUND, C. This cause, already twice before in this court, comes here once more upon appeal from an order of the district court sustaining certain objections of the defendant Marion G. Rohrbough to its jurisdiction over him or his property. The facts disclosed by the record, briefly stated, are these: Suit was begun by appellant to foreclose a mortgage upon several tracts of land, including certain property of Rohrbough, the appellee herein. The sheriff returned that he had served summons upon said Marion G. Rohrbough by delivering to "her personally" a true copy thereof. Thereupon default was entered in due course, and a decree of foreclosure was rendered, which was brought to this court on appeal by other defendants. Baldwin v. Burt, 43 Neb. 245. That decree having been reversed, a new one was rendered, and an order of sale issued. When the appraisers came upon his property under the order of sale, Mr. Rohrbough, who claims to have known nothing of the proceedings or decree prior to that time and had made no appearance, filed objections to the jurisdiction of the court, upon consideration whereof the court quashed the return of service. The sale proceeded, however, and on motion for confirmation and objections thereto by Mr. Rohrbough the court set it aside. An appeal was taken from those orders by the plaintiff, which resulted in a reversal of the order quashing service, and an affirmance of the order refusing confirmation of the sale. Baldwin v. Burt, 54 Neb. 287, 74 N. W. 594. On coming down of the mandate, the plaintiff procured a new order of sale, and was proceeding thereunder, when further objections to the jurisdiction of the court, supported by affidavits showing the facts above indicated, were filed by Mr. Rohrbough. No relief was asked for, but the court proceeded to a hearing on the objections, in the course of which it clearly and conclusively appeared that service was had, not upon Marion G. Rohrbough, a man, the owner of the property in controversy, but on one Lillian Rohrbough, the wife of Lee J. Rohrbough, brother of the party returned as served. The officer who made the service testified that he intended to and did serve the writ upon a woman, and the very words of his return indicate as much. It also appeared clearly that the writ never reached or came into the hands of Marion G. Rohrbough. The court made findings accordingly, and sustained the objections.

Each party now invokes the well-settled rule that a prior decision of this court in a given cause is the law of the case in all subsequent proceedings as to all matters passed upon or involved in the decision. The appellant relies upon the reversal of the order quashing service, and what are claimed to be necessary deductions therefrom. The appellee relies upon the affirmance of the order denying confirmation of the sale and the grounds thereof as stated in the syllabus and in the opinion of Ryan, C. But we do not think the rule should apply to propositions of law upon which the members of the court taking part in the decision were equally divided. The two judges and two commissioners who participated were agreed that the one order should be reversed and the other affirmed, but they differed as to the reasons therefor, and as to the principles of law to be applied. The appellant relies upon the opinion of Ragan, C., which would seem to sustain her position. The appellee argues

¶ 2. See Judgment, vol. 30, Cent. Dig. §§ 35, 926.

Digitized by Google

from the opinion of Ryan, C., and the syllabus, which in large part sustain his position. Harrison, C. J., concurred with Ryan, C., holding the refusal to confirm the sale proper because the court never had any jurisdiction over Mr. Rohrbough, and holding the order quashing service erroneous because the summons was functus officio after decree, and the return mere evidence, so that the decree itself, not the summons and return, had become the real and only legitimate subject of attack. Ragan, C., held that the order refusing confirmation was proper because the service had been quashed at the time the sale was made, and hence the authority to make a sale was gone, and that the order quashing service was erroneous because, the real point of attack being the decree, a defense ought to have been stated as required by section 602, Code Civ. Proc. Sullivan, J., was unable to agree in all that was said in either of the other opinions. He concurred with Ragan, C., as to the reasons for upholding the order denying confirmation. On the other point he simply said the order quashing the service was in legal effect a vacation of the decree accomplished in an unauthorized manner. Norval, J., expressed no opinion, and Irvine, C., did not sit. Under such circumstances, it cannot be said that the syllabus is to be taken as expressing the law of the case, or that any rules to be given that effect were laid down. The several propositions of law discussed are left open, and it is now our duty to examine them independently, and state our independent conclusion.

It is the settled law of this state that a false return of service of process may be impeached by extrinsic evidence, and that where the attempted service fails to reach the party to be served in any way a judgment founded thereon is absolutely void and open to collateral attack. Campbell Printing Press & Mfg. Co. v. Marder, 50 Neb. 283, 69 N. W. 774, 61 Am. St. Rep. 573; Holliday v. Brown, 33 Neb. 657, 50 N. W. 1042; Eayrs v. Nason, 54 Neb. 143, 74 N. W. 408. Counsel have cited us to a decision of the Supreme Court of Illinois to the contrary, and we are aware that many courts of high standing hold otherwise as to the last proposition. Van Fleet, Collateral Attack on Judicial Proceedings, § 468. But we are entirely satisfied of the soundness of the established rule in this state. To say that a party not served in fact is bound in any way by a recital of service which derives its force solely from the power of the court which is acquired by service is to reason in a circle. Van Fleet says that the fallacy in the doctrine adhered to in this state lies in "confusing law with right." Where we are not bound by the imperative terms of a statute or some like emanation from superior authority, or the rule is not of such long standing and unquestioned validity that controlling considerations of expediency requ
herence to it, judicial confusion of rig
law is far from being noxious. So l
judges are compelled by the form and
of our legal system to undertake some
of the work theoretically devolving up
legislator, the same ethical conside
ought to be kept in view as those
any other lawgiver.

If a judgment based upon a false
of service, no service having in fact
the party to be bound in any way, is
void and open to attack in collateral p
ings, it must follow that the third s
sion of section 602, Code Civ. Proc., d
apply thereto. It is true, in his opi
this case on the former appeal (54 Ne
74 N. W. 594), Ragan, C., stated ar
that the failure to serve process upon
bough and service upon his sister
instead was an irregularity, within t
view of that section. But when the q
came up once more in Clark v. Cha
Neb. 202, 206, 75 N. W. 563, the co
pressly refrained from deciding as to
plication of the statutory provisions
cating and modifying judgments to
which are void and subject to collate
tack. Later, in Kaufmann v. Drexel,
229, 76 N. W. 559, it was squarely pas
on, and the court held that section
reference only to judgments and orde
sessing some degree of legal vitality,
to such as are absolutely void. "To s
the vacation or modification of a voi
ment," says Sullivan, J., in that case
perversion of language. There be
judgment, but the mere form and cou
of a judgment, there is nothing to annul
may take it as settled, therefore, t
"irregularities" referred to in the thi
division of that section are those whi
der the judgment voidable only, lea
proof against collateral attack, such a
answer day too early in service by p
tion. Wilkins v. Wilkins, 26 Neb. 235
W. 1101; Scarborough v. Myrick, 4
794, 66 N. W. 867. Or service of su
by reading instead of delivering a
Gandy v. Jolly, 35 Neb. 711, 53 N. W.
Am. St. Rep. 460. Even where there
service at all, and the judgment is voi
of course, true that when one proce
firmatively to have it set aside he mus
a meritorious defense. But this princi
no application to cases of mere resi
When the plaintiff is seeking to enfo
judgment affirmatively, it is enough t
that it is void. The plaintiff's rights
upon it, and if it fails the rights asser
der it fail likewise. Campbell Printing
& Mfg. Co. v. Marder, 50 Neb. 283, 69
774, 61 Am. St. Rep. 573.

In view of these well-established ru
think the order of the district court
no ground of complaint. In its effe
operation it is simply a refusal on th

Digitized by Google

of the court to do an act which would be purely nugatory and without legal force or validity. Had another sale been held under the decree, and a deed issued, when the purchaser brought ejectment thereunder his deed would have failed by reason of the want of jurisdiction. The judgment being worthless, all proceedings founded upon it are equally worthless. "All acts performed under it and all claims flowing out of it are void." 1 Freeman, Judgments, § 117. But it is well settled that a judgment should be reversed only for errors which operate to the prejudice of the party complaining thereof. Where it is manifest that no prejudice has resulted, errors of themselves are not ground of reversal merely to vindicate abstract principles of the law. Hence it should not matter whether the court refused to proceed under the void judgment on its own motion or because its attention was called to the facts by the objections filed by appellee. His objections merely set forth the facts. There is no prayer for relief. But whether we treat them as a mere suggestion to the court that it ought not to go on or as a covert attack on the decree is immaterial. Appellant has not been prejudiced. He has no right to insist that the court proceed with a mere farce. Even if the mode by which the court expressed its refusal to go on had been informal or irregular, it ought not to be reviewed under such circumstances.

We recommend that the order appealed from be affirmed.

OLDHAM and SEDGWICK, CC., concur.

Affirmed.

On Rehearing.

(Oct. 22, 1902.)

OLDHAM, C. The former opinion in this case was filed January 8, 1902, and is officially unreported. In that opinion all the issues involved in this controversy are fully stated, and each question raised is carefully reviewed, and we think properly determined. It unmistakably appears that this proceeding is grounded on an attempt to force a judicial sale of real estate owned by appellee Rohrbough, on a judgment absolutely void as to him and his property, for the reason that no service of summons of any kind was ever had upon him. Appellant still contends that appellee Rohrbough should not have been heard to question the validity of the judgment on an objection filed to the confirmation of the sale made under it, but that his rights, if any, should have been enforced under the provisions of section 602 of the Code of Civil Procedure. We still think that there is no escape from the conclusion reached in the former opinion, that, in view of the rule plainly laid down in the recent case of Kaufman v. Drexel, 56 Neb. 233, 76 N. W. 559, the provisions of section 602, supra, are construed to relate to orders and judgments that are voidable, and not to those that are void.

In the brief on rehearing appellant says that they "wish also to protest against the adoption of a rule by this court that allows a judgment to be nullified without a trial as to its validity and a chance to cross-examine the witnesses offered by the judgment defendant in support of his claim that the judgment is invalid." We have no criticism to offer on this reasonable protest, except that it is not made at an opportune time. It is true that the record discloses the fact that proof that no service of summons was ever made on appellee Rohrbough was procured by the affidavit of the officer who had the summons in his hands for service. No objection to this method of proof was interposed in the court below, and no request was made for the privilege of cross-examining the officer, and appellant did not dispute the fact that no service of summons had ever been had upon Rohrbough, but simply denied his right to raise this question on an objection to the confirmation of the sale bad under the judgment. So there is nothing in the former opinion that threatens to debar a judgment creditor from the right of cross-examining witnesses on whose testimony a judgment is sought to be impeached, if such privilege be demanded at the proper time.

The former opinion proceeded on the theory that whenever it was made to unmistakably appear to a trial court that he was requested to stand at the pall of a void judgment—a lifeless thing, a dead Lazarus—and command it to arise and fling off the vestments of the grave, he might decline to attempt the miracle, even if objection to the proposed incantation was but informally interposed.

It is therefore recommended that the former opinion in this case be adhered to.

BARNES, C., concurs.

POUND, C. (concurring). The only serious question in this cause is whether the court should have received proof by affidavit or left the matter to be tried in ejectment or suit to quiet title. I thought at the former hearing, and still think, that if the decree was in fact void as to Rohrbough, so that a sale thereunder would convey no title, the ruling of the district court in refusing to confirm such a sale would be error without prejudice, no matter how the court ascertained the invalidity of the prior proceedings. A sale and deed can do the appellant no possible good so long as she can never get possession under them, and the court should not be ordered to do a nugatory act. The point, therefore, on which all must turn, is whether there was service on Rohrbough. If this were in serious dispute, I should hold that the question could not be tried by affidavit. Fox v. State (Neb.) 88 N. W. 176. But so long as the sheriff's return strongly suggests, and

Digitized by Google

his affidavit shows, that service was not made, and there is no substantial conflict, there can be no objection to the action of the court in proceeding upon affidavit.

Former opinion adhered to.

CLEMMONS et al. v. CLEMMONS.

(Supreme Court of Nebraska. Nov. 20, 1901.)

WITNESSES—EXCLUSION FROM COURTROOM—DISOBEDIENCE OF RULE.

1. Where, before the commencement of a trial, an order of court is entered excluding from the courtroom all witnesses except the one on examination, and one of them, not being informed of such order, enters the courtroom, and remains for a brief time during the examination of a witness, it is error on the part of the court to refuse to allow such witness to testify, where neither the party by whom he is called nor the attorneys of the party are privy to the violation of the rule on the part of the witness.

Commissioners' Opinion. Department No. 3. Error to District Court, Cass County; Ramsey, Judge.

"Not to be officially reported."

Action by Noah Clemmons against George W. Clemmons and others. Judgment for plaintiff, and defendants bring error. Reversed.

Allen Beeson and Jesse L. Root, for plaintiffs in error. C. S. Polk and O. B. Polk, for defendant in error.

DUFFIE, C. The pleadings in this case are very voluminous, but an understanding of the points ruled can be had from a short statement of the facts. The plaintiff, an old man of 82 years, was the owner of a farm of something over 200 acres in Cass county, Neb. He had no family. The defendant George W. Clemmons is his nephew. Some time in the fall of 1896 he wrote to his nephew at Shellsburg, Iowa, requesting a visit from him and his wife. The nephew came to Nebraska some time in November, and the petition alleges that at that time they entered into an oral agreement by the terms of which the nephew and his wife were to remove from Iowa to the old man's farm, to provide him with suitable food, look after his clothing, and give him such care and provide him with such comforts as dutiful children would provide for their parents; that in consideration of this, plaintiff was to execute a deed of his farm to his nephew, and place the same in escrow with James Patterson, to be delivered after his death and burial. The petition further alleges that such oral agreement is unconscionable, and was secured from the plaintiff by flattery, fraud, and deceit, and by the exercise of undue influence on the part of George W. Clemmons over the plaintiff. The plaintiff is over 84 years of age, is in poor health and that his expectancy of life is less than 5 years; that the nephew and his wife came from Iowa, and went on to the farm, but failed, neglected, and refused to perform their oral agreement in many material respects that are set out in the petition; that in consequence thereof the plaintiff, on or about March 1, 1897, elected to rescind the contract, and so notified the defendants, and requested them to vacate the premises; that defendants refused to give up possession, and claim some right in the premises which creates a cloud upon the plaintiff's title. He therefore asks that the contract be declared null and void, and that title to the premises may be quieted in him as against any claims of the defendants.

The answer alleges: That the defendant George W. Clemmons came to Nebraska at the request of the plaintiff, and that at plaintiff's solicitation they entered into an agreement by which the defendants were to remove from Iowa and take possession of the plaintiff's farm, and provide him with a home. That before returning to Iowa for his wife the plaintiff and said George W. Clemmons went to Plattsmouth, where a written agreement was drawn up, and signed by the plaintiff, as follows:

"This agreement made and entered into this 26th day of November, A. D. 1896, by and between Noah Clemmons, party of the first part, and Mary Belle and George W. Clemmons, parties of the second part, witnesseth: That the said party of the first part hath agreed with the parties of the second part that in consideration that said Mary Belle and George S. Clemmons shall remove from Benton County in the State of Iowa to the farm of the party of the first part in Cass County, Nebraska, and there reside with the party of the first part, their uncle, upon his farm during the remaining years of his life and care for him in all manner as dutiful and affectionate children will care for their parents, providing for his comfort in health and sickness.

"That said party of the first part will now upon the signing and sealing of this agreement, make, execute and convey unto the said Mary Belle and George W. Clemmons, parties of the second part his farm of two hundred and two (202) acres upon which he now resides, said conveyance to be held in escrow by James M. Patterson of said Cass County for and on behalf of the said parties to this agreement. Said conveyance to be delivered to the parties of the second part after the death and burial of the said party of the first part.

"And these presents witnesseth further: And it is hereby fully understood and agreed between the said parties that the said Mary Belle and George W. Clemmons are to live with the party of the first part upon his said farm during his life time rent free, and have of the proceeds of said farm from all sources sufficient for their maintenance and support, and the maintenance and support of their said uncle, and party of the first part not to exceed in any event, the sum of $500.00. Said

sum to be of the proceeds of said farm. It is hereby further understood and agreed by and between the parties that the said party of the first part is to have control and management of said farm during the existence of this agreement and until the same is modified by a subsequent agreement of said parties. It is further understood by and between said parties that the taxes upon said farm are to be paid annually from the proceeds thereof: First, before said proceeds are diverted for any other purpose. Said parties of the second part to have permission during the time they reside with the party of the first part, to make any reasonable repairs upon said premises they may see fit at their own expense, unless by agreement with the party of the first part said expense shall be paid from the proceeds of the farm.

"Witness our hands the day and year first above written.

"N. Clemmons.
"Mary Belle Clemmons.
"George W. Clemmons."

That this agreement was to be submitted to the wife of said George W. Clemmons, and become effective when approved by her. That when this agreement was reduced to writing the plaintiff also executed a deed to the premises, which was left with the attorney for delivery to James Patterson when the written agreement was approved by Mrs. Clemmons and executed by the defendants. That defendants executed the written agreement some time after their removal to Nebraska, but that the plaintiff about March 1, 1897, attempted to repudiate the contract, and notified the defendants to vacate the premises. That he also obtained possession of the deed, and refused to carry out his contract. They ask that plaintiff's bill may be dismissed, and the contract between the parties may be adjudged a valid and subsisting contract.

A lengthy reply was filed, admitting the execution of a deed by the plaintiff, and its deposit with the attorney for delivery to Patterson when a written memoranda of the oral agreement between the parties had been executed by the defendants. The plaintiff also admitted the making of the written agreement set forth in the answer, but alleges that he did not understand the same, and signed it without knowing what it contained. The reply contains other matters, which it is not necessary to set out.

Before the trial commenced, the court, at the request of the defendants, entered an order excluding the witnesses from the courtrooom prior to their examination. Hon. S. M. Chapman, the attorney who prepared the written agreement set out in the answer, was called as a witness in behalf of the defendants, when objection was made to his testimony on the ground that he had violated the rule, and been present in the courtroom during a part of the examination of the defendant George W. Clemmons. This objection was sustained by the court, and this ruling is one of the errors assigned by the defendants. From the statement above made it will be seen that the circumstances attending the making of the written contract were a material subject of inquiry, and the evidence of a disinterested witness relating thereto would naturally have great weight in determining which of the parties suggested or dictated the terms of the agreement, whether it had been read by the parties and understood by them, whether, in short, the circumstances attending its execution by the plaintiff indicated that it was fairly understood and freely made on his part. The record before us is very full and complete relating to the facts controlling the question now before us. The undisputed facts are these: Chapman is an attorney at law residing at Plattsmouth, where this case was tried, his office being directly across the street from the courthouse. He was not subpœnaed as a witness by the defendants for the reason that he had informed their attorneys that he would be in town during the trial, and would attend at any time when notified that they wished to use him. He had not been informed of the rule made, and plaintiff's counsel expressly exonerated him from an intentional violation of the rule. During the redirect examination of George W. Clemmons by Mr. Beeson, another of the defendants' attorneys, Mr. Root left the courtroom, and crossed the street to Chapman's office, and informed him that they were ready to use him. Chapman crossed the street ahead of Root, who was detained for a short time by a client, entered the courtroom, remaining from one to two minutes, and hearing or having the opportunity to hear about eight of the last questions propounded to the witness Clemmons, and his answers thereto. When Chapman entered the courtroom, or as soon as plaintiff's attorneys observed his presence, one of them, "having it in mind that he might be called as a witness," as he testifies, called the attention of the court to his presence; but this was not done by an open announcement of the fact, nor in such a way as to make Chapman's presence known to the defendants' attorneys. Under the circumstances we think that the court erred in refusing to allow the witness to testify. Without any meaning to establish any inflexible rule in such cases, the record discloses—indeed the defendant in error on the oral argument conceded—that the testimony of Chapman would not be in the least influenced by what he did or might learn from hearing the testimony of any other witness in the case. The only objection urged against his being allowed to testify on the argument in this court was that his recollection of the facts might have been refreshed by the testimony which he heard. We cannot believe that it is a good objection to the testimony of a credible witness that his recollection has been refreshed, and that the facts sought to be elicited are clear and distinct in his mi

The very object to be attained by the examination of witnesses is to arrive at the truth of the matter in dispute between the parties, and whatever will tend to attain this result ought to be encouraged, rather than objected to.

The record makes it quite plain that the defendant in error knew, or had good reason to believe, that Chapman, while not regularly subpœnaed, would be called as a witness to give evidence relating to what occurred at the making of the written agreement which he prepared for the parties. Instead of calling the attention of the court to the presence of Chapman in a private way, the defendants in error or his attorneys should have directed the attention of the court to their presence in such a way that the other side might have knowledge of his presence. That they did not do so we are inclined to regard as a waiver by them of their right to object to his use as a witness. The witness himself had no knowledge of being under the rule. The attorneys for the plaintiff in error had no knowledge of his presence in the courtroom. There is no pretense that he disobeyed the rule by their consent or procurement. Under such circumstances the Supreme Court of Missouri very fully expresses our views in Keith v. Wilson, 6 Mo. 435, 35 Am. Dec. 443, in the following language: "In some cases, where the witness has been contumacious, and purposely transgressed the order, this circumstance has been held sufficient to justify the court in excluding him. But I have seen no case in which it appeared that the disobedience of the witness was owing to his misapprehension of the object or nature of the order, and where neither the party nor his counsel were privy to such disobedience, in which the court has been held warranted in excluding the witness. Indeed, if such an inflexible rule did exist in any of the courts of this country, it might well be questioned whether it would not be sounder policy to sacrifice the practice altogether, rather than endanger more vital principles than can be involved in the blind adhesion to a rule of court, however reasonable and right in ordinary cases. A witness cannot deprive a party of the benefit of his testimony by any contumacy of his, if there be no laches or connivance on the part of the person who has a right to his testimony. The court is invested with ample powers to punish such contumacy and enforce its orders, and it will not be contended that a party is bound to watch his witnesses to prevent their misconduct. The suitor has no extraordinary powers to enforce his wishes, nor is it, I apprehend, his duty to exercise more than ordinary diligence. If the misconduct of the witness comes under his notice, it would be undoubtedly his duty to present the matter to the court, but the affidavit of Keith in this case negatives that fact, and the affidavit of the witness establishes that there was no willful contumacy. Under these circumstances I do not see how the court has any right to deprive K the benefit of this testimony."

Relating to the claim that the petiti not state a cause of action, we do n to spend time, as the case will have t versed, and the plaintiff can, if he s amend his petition before another trial a contract for the care and support aged and infirm person may be canc a court of equity where the party a to perform the services fails to give su and attention to the other party as i lated for in the agreement, is well by the authorities. Peck v. Hoyt, 3 9; Patterson v. Patterson, 81 Iowa, N. W. 768; Martin v. Martin, 44 Ka 24 Pac. 418; Reeder v. Reeder, 89 K 12 S. W. 1063; Morgan v. Loomis, 594, 48 N. W. 109.

We recommend that the decree of trict court be reversed, and the case ed for further proceedings.

AMES and ALBERT, CC., concur.

Reversed and remanded.

METCALF et al. v. BOCKOVE

(Supreme Court of Nebraska. Nov. 20,

ATTACHMENT—DISSOLUTION — SUPER BOND—ACTION — DEFENSES — ABATE ANOTHER ACTION PENDING—HARMLE ROR.

1. Attachment and garnishment proc to supersede order for the dissolution o bond in suit was given, examined, a voidable only.

2. One who gives a supersedeas bond in force, pending proceedings in error, tachment and garnishment discharged b of trial court, cannot be heard in defen suit on such bond to say that defen whom such bond was given had no int attached property, or that the attachm garnishment proceedings were invalid of irregularity.

3. Whether one who gives a supersede to hold in force, pending error proceedi tachment and garnishment discharged court, can be heard, in defense of a suit bond, to say that such proceedings we for want of jurisdiction, quære.

4. To abate a suit because of the p of another action, it must appear that ject-matter is so far identical that a in one action would bar a recovery in th

5. A judgment will not be reversed because of the admission of incompeten relevant evidence in an action tried to without a jury. National Masonic Ac v. Burr, 77 N. W. 1098, 57 Neb. 437.

Commissioners' Opinion. Departm 1. Error to District Court, Douglas Powell, Judge.

"Not to be officially reported."

Action by Anna S. Bockoven again ace G. Metcalf and another. Judgm plaintiff, and defendants bring erro firmed.

E. E. Carr and Smith & Sheean, fo tiffs in error. Greene, Breckenridge ler and O. A. Abbott, for defendant i

¶ 2. See Abatement and Revival, vol. 1, C § 40.

Digitized by Google

KIRKPATRICK, C. This is an action brought in the county court of Douglas county by Anna S. Bockoven against Horace G. Metcalf and John J. Gibson, plaintiffs in error, to recover the sum of $795.95 and interest on a supersedeas bond given to supersede and keep in force a judgment of the district court discharging certain attachment and garnishment proceedings. The bond was given by Horace G. Metcalf as principal, and John J. Gibson as surety, in a case of Horace G. Metcalf v. Anna S. Bockoven et al., tried to the district court of Douglas county, and finally determined by this court. Metcalf v. Bockoven, 42 Neb. 590, 60 N. W. 901. Trial was had in the county court, which resulted in a judgment for defendant in error. The case was taken on appeal to the district court, where it was tried to the court, a jury having been waived. The trial on appeal, on June 25, 1897, resulted in a finding and judgment in favor of defendant in error, and against plaintiffs in error, in the sum of $703.82 and costs of suit. To review this judgment the case is brought to this court by petition in error.

The petition of defendant in error in the district court was in the usual form, declaring upon a supersedeas bond. Plaintiffs in error filed separate answers, alleging, in substance, first, that the district court in the garnishment proceedings against the Ætna Life Insurance Company was wholly without jurisdiction; that the life insurance company was a foreign corporation, and that the policies of life insurance were due and payable at the office of the company, and that the company had no property or rights within the state of Nebraska subject to garnishment; that defendant in error, Anna S. Bockoven, had sold and assigned her interest in the life insurance policies to Lydia D. Stott, of Philadelphia; that the Ætna Life Insurance Company had been garnished by the Bank of Commerce of Grand Island, Neb., in the superior court of Hartford, Conn., in a suit there instituted pending against defendant in error, which had resulted against defendant in error; and that she was therefore not damaged by the giving of the supersedeas bond in question. Plaintiffs in error further pleaded in their answers that defendant in error had commenced and was prosecuting a prior suit in the district court of Hamilton county, to recover the same damages set up in her petition in the case at bar, and pleaded by way of set-off that defendant in error was indebted to Horace G. Metcalf in the sum of $399.50, for which they prayed judgment against her.

To these answers a reply was filed by defendant in error, consisting of a denial, and admitting the assignment of the insurance policies, but alleged that they were assigned as security only, and that the loss of interest on the money was a damage to defendant in error. Plaintiffs in error claim that the proceedings of the trial court were erroneous in the following particulars: (1) That the court had no jurisdiction over the life insurance company in the garnishment proceedings, and could and did make no valid order withholding said money from defendant in error, and therefore the giving of the supersedeas bond did not result in her damage, and that there should have been no judgment against plaintiffs in error; (2) that, defendant in error having assigned her policies of insurance, she had no further interest in the proceeds, and that, even if the garnishment proceedings did result in impounding the money, nothing was due her thereon, and for that reason she could have suffered no damage; (3) that, having commenced a prior action in the district court of Hamilton county to recover upon the same cause of action, the case at bar should abate; (4) that the garnishment proceedings in the state of Connecticut against the life insurance company in the case of the Bank of Commerce of Grand Island against defendant in error were valid and of full force, and that, inasmuch as the money due defendant in error on the life insurance policies was appropriated in that case, she suffered no damage; (5) that plaintiffs in error were entitled to a judgment on their set-off for the full amount claimed; (6) and that the court erred in admitting over objections certain depositions. These contentions will be noticed in their order.

The determination of the first question presented requires a consideration of the attachment and garnishment proceedings had in the case of Horace G. Metcalf against Anna S. Bockoven et al. In that case an affidavit was filed for an attachment, in which it was alleged that the defendant, Anna S. Bockoven, was a nonresident of the state of Nebraska, and was absent therefrom, and that she had property and rights of action in Douglas county. An affidavit of garnishment was then filed, which, omitting the formal parts, was as follows: "Edgar H. Scott, being first duly sworn, deposes and says that he is the duly authorized attorney for the said plaintiff, Horace G. Metcalf; that he has good reason to believe and does believe that the Ætna Life Insurance Company, a corporation, and within said county of Douglas, has property of the said defendant Anna S. Bockoven in its possession, to wit, that the Ætna Life Insurance Company is indebted to the said Anna S. Bockoven in the sum of $5,000 upon a life insurance policy, and has in its possession the sum of $5,000 belonging to the said defendant Anna S. Bockoven." An order of attachment and a notice of garnishment in regular form were issued and served upon one Edwin B. Hall, who was the agent of the Ætna Life Insurance Company, in Douglas county. Pursuant to said notice, the insurance company appeared by its attorney, and also H. A. Babcock, who testified that he was the general agent of the Ætna Life Insurance

Digitized by Google

pany of Hartford, Conn., for the state of Nebraska. The answer of Mr. Babcock, as agent of the company, was taken in part, when it was agreed by and between the attorney for the life insurance company, the attorney for defendant in error, and also the attorney for Horace G. Metcalf, plaintiff in the action, that the further answer of the garnishee should be continued to the next term of the district court of Douglas county. It also appears that a stipulation was filed in the case, signed by the attorneys for Metcalf and Bockoven, continuing the hearing of the answer of the Ætna Life Insurance Company, garnishee. No further or additional answer seems to have been taken. Defendant in error filed a motion to discharge the attachment and garnishment, which was overruled by the court.

It will be noticed that the affidavit in garnishment sets out that the Ætna Life Insurance Company is a corporation in Douglas county, and that it has property of defendant in error in its possession and under its control, and that it was indebted to Anna S. Bockoven in the sum of $5,000. That portion of section 207 of the Code which provides what the affidavit in garnishment shall contain is as follows: "When the plaintiff, his agent or attorney, shall make oath in writing that he has good reason to, and does believe, that the person or corporation, to be named and within the county where the action is brought, has property of the defendant (describing the same) in his possession," etc. An examination of the affidavit as hereinbefore set out shows that it fully complies with the requirements of this section. When defendant in error presented the question to the district court by a motion to discharge the attachment and garnishment, the district court overruled the motion, and held that it had jurisdiction. There is no question, so far as appears from the proceedings, but that the district court had jurisdiction, both of the parties and the subject-matter, and therefore any order that it might make would, at most, be voidable, and not void. From this it follows that the first contention of plaintiffs in error cannot be sustained.

But there is another equally potent reason why plaintiffs in error cannot be heard to complain in this case. Horace G. Metcalf, plaintiff in that case, and Anna S. Bockoven, the defendant, and the Ætna Life Insurance Company, all treated these garnishment proceedings as valid in every respect. On the trial of the main case, the district court found that Horace G. Metcalf had no cause of action, dismissed his petition with costs, and discharged the attachment and garnishment proceedings. Plaintiffs in error then gave the bond in suit for the purpose of superseding the judgment of the district court dissolving the attachment and garnishment, and for the purpose of holding the money in the hands of the life insurance company to be appropriated for the payment of their claim, should this court finally hold that there was error in the judgment of the district court. That part of the undertaking sued upon necessary to be examined is as follows: "Whereas, in an action pending in the district court of Douglas county, Nebraska, wherein Horace G. Metcalf was plaintiff, and Anna S. Bockoven and Alphonso J. Metcalf were defendants, the district court on, to wit, the 9th day of November, 1892, rendered judgment dismissing said action and discharging the order of attachment issued therein against the property of the defendant, Anna S. Bockoven, in which said Horace G. Metcalf intends to and will file his petition in error in the Supreme Court of the state of Nebraska, seeking a reversal of the aforesaid judgment of dismissal and order of discharge of said attachment: Now, therefore," etc. Plaintiffs in error having executed and delivered this bond, setting up that the property attached was the property of defendant in error, are concluded by the terms of the bond they gave, and are estopped from now saying that the attachment and garnishment proceedings were ineffectual, and that the property garnished was not the property of defendant in error. Plaintiffs in error insisted that the garnishment proceedings were valid; took exceptions to the judgment of the district court dissolving the proceedings; promptly gave the bond in suit to hold such proceedings in force; the proceedings were so far effectual as to prevent defendant in error from collecting the money due her from the life insurance company until the final disposition of the case in supreme court; and plaintiffs in error cannot be heard to say that such proceedings were invalid. Hermann on Estoppel and Res Adjudicata, § 633; Gudtner v. Kilpatrick, 14 Neb. 374, 15 N. W. 708; Hayden v. Cook, 34 Neb. 670, 52 N. W. 165; Kilpatrick-Koch Dry Goods Company v. Bremers, 44 Neb. 863, 62 N. W. 1105.

It is next contended that, defendant in error having assigned her interest in the policies of life insurance, there was nothing due her, and, as no money was retained from her, she has sustained no damage. This position cannot be sustained for two reasons: First, plaintiffs in error in their answer allege that defendant had for a valuable consideration assigned and disposed of all her interest in the life insurance policies, and that she had no further interest therein, and that nothing was due her from the company. The reply to this answer admits that the policies were assigned, but says that they were assigned as security only, and denies that she had no money coming to her from the life insurance company. Under these pleadings, the burden was on plaintiffs in error to sustain their allegations, and show just as they pleaded that defendant in error had disposed of all her interest in the policies, and that for a valuable consideration. This they failed to do. Second, Metcalf, having attached and

Digitized by Google

garnished this property, alleging that it belonged to defendant in error, and having set up in his supersedeas bond that it was the property of the defendant in error, is now estopped from claiming that it was the property of some other person. Easton v. Goodwin, 22 Minn. 426; Pierce v. Whiting, 63 Cal. 538; Johnston v. Oliver, 51 Ohio St. 6, 36 N. E. 458; Grimes v. Farrington, 19 Neb. 44, 26 N. W. 618.

It is next contended that defendant in error had a prior action pending in the district court of Hamilton county to recover these damages. An examination of the petition filed in the district court of Hamilton county, which is a part of the bill of exceptions in this case, discloses that the damages recovered on the supersedeas bond here in suit were expressly reserved and deducted from the cause of action set up in the district court of Hamilton county, and the district court in the case at bar expressly finds that the cause of action set up in the petition herein and the cause of action pleaded in the petition filed in the case in Hamilton county are not identical. It therefore follows that this contention of plaintiffs in error cannot be sustained.

An examination discloses that the attachment and garnishment proceedings had in the state of Connecticut were absolutely void for want of jurisdiction. No service or attempted service was made upon the defendant in error. Hence such proceedings were entirely void, and could not be made the subject of a defense in this action.

Plaintiff in error Metcalf was allowed to recover on his set-off in the district court in the sum of $130. It is contended that the testimony shows that there was due him from defendant in error $399.50. This question was submitted to the trial court, and the finding seems to be supported by sufficient competent evidence, and, in accordance with a familiar rule of this court, it will not be disturbed.

Again, it is contended that the trial court erred in admitting in evidence the attachment and garnishment papers in the cause in which the supersedeas bond was given. There seems to have been no error in this action of the trial court. These were papers filed in that case by Metcalf, plaintiff in error, and he cannot now be heard to object to their admission in evidence. The trial court had a right to have the entire proceedings before it. But whether the action of the trial court was erroneous or not is wholly immaterial in this case. This action was tried to the court without a jury, and it is the settled rule in this court that a judgment will not be reversed merely because of the admission of incompetent or irrelevant evidence in a case tried to a court without a jury. National, etc., Ass'n v. Burr, 57 Neb. 437, 77 N. W. 1098.

It is disclosed by the briefs in this case that there was an attempt made to settle the case and satisfy the judgment during the pendency of the cause in this court. This settlement was never consummated, but there was paid on the judgment by John J. Gibson the sum of $100 on November 28, 1898, for which they should have a credit. Justice seems to have been done in this case, and we find no error in the proceedings of the trial court. It is therefore recommended that the judgment of the trial court be in all respects affirmed.

DAY and HASTINGS, CC., concur.

Affirmed.

DAVIDSON v. DAVIDSON et al.

(Supreme Court of Nebraska. Nov. 20, 1901.)

WILL—CONTEST—UNDUE INFLUENCE—EVIDENCE—DECLARATIONS OF TESTATOR.

1. Mere declarations of a testator subsequently to the execution of a will are not evidence, in a contest of the will on the sole ground of undue influence, of any fact as to the existence of such influence stated in them.

2. In the absence of independent proof of undue influence, where the sole issue is as to its existence, such declarations are not admissible for any purpose.

3. A conversation, 15 or 20 minutes after the execution of a will, between the testator and a subscribing witness, in the absence of the other subscribing witness, who drew it, and in a different building from the one where it was made, which conversation refers to the will as already made, and contemplates its continued existence, is not admissible as part of the res gestæ.

4. A recital in a will offered for probate does not warrant the admission of evidence which is otherwise inadmissible under section 329 of the Code, merely in order to contradict such recitals.

5. An instruction in effect to find for contestants if the testator made the will only to keep peace in the family, *held* prejudicial error, the only issue being as to undue influence.

Commissioners' Opinion. Department No. 1. Error to District Court, Phelps County; Adams, Judge.

"Not to be officially reported."

Action between Caroline Davidson and Andrew Davidson and others. From the judgment, Caroline Davidson brings error. Reversed.

A. J. Shafer and H. M. Sinclair, for plaintiff in error. Hall & Reed and J. L. McPheely, for defendants in error.

HASTINGS, C. This case is much simplified by the fact that the contestants of the will put their case on the sole ground that the will of Gustaf Davidson, propounded by his widow and her children, was the result of undue influence on her and their part. It is conceded that the burden of proof was upon the contestants, children by a former wife, to establish such undue influence. It is contended by the plaintiffs in error, proponents of the will below, that there is no competent evidence to sustain the finding of the jury in favor of contestants. It is also

Digitized by Google

tended that there were certain errors in the admission and rejection of testimony and in the instructions of the court.

Gustaf Davidson on June 25, 1890, 8½ years before his death, being then a well to do farmer of Phelps county, about 69 years of age, accompanied by a friend named Worden, appeared at the office of P. O. Hedlund, of Holdrege, a lawyer and banker, and procured a will to be drawn up. He signed it, and procured its signature by Worden and Hedlund, bequeathing all his property, after the payment of his debts, to his wife and his nine children by her, giving to the wife possession of all the property; the same not to be divided or distributed in her lifetime. She was to have full control of it, without bond, except that she could convert it into money only so far as might be necessary to provide for herself and the children while they should remain at home. Any of the children leaving home were to forfeit all claim of support from the property, and the property was not to be divided until the wife should die or remarry. The will contained a proviso as follows: "Third. I hereby totally disinherit the following named, my children with my former wife, viz.: Andrew, Christine, Emily and John. I do this from no ill will but from the fact that each of them is quite comfortably situated and I have given to each of them all substantial assistance to which I deem them entitled and I hereby direct that they shall receive nothing from the property of which I may be possessed at my death." It appears from the testimony of the subscribing witness Hedlund that the will was dictated either by the testator himself or by Worden, that testator fully understood it, that its provisions were discussed, and that it was made as he desired to have it. The other subscribing witness, Worden, testifies to the execution of the will; that it may have been read over to the testator, but he thinks not: and he thinks 20 minutes—possibly 15 minutes—after they left the bank, in a stairway leading to Worden's room, the testator said to him: "'Mr. Worden, one of my children is so close to me as another, and what I have told you I want you to remember, and do what I ask of you.' Mr. Davidson wanted me, if I lived longer than he did, to see that all his children had justice and rights, because one was the same as the other. * * * He stuck to it at all times. He wanted all to have the same—one child the same as another. * * * He said that the will was made to keep peace in his family. He said a great deal about one of his boys, and that was the oldest one by the second wife, Albert. This son caused a great deal of hardness between him and his wife. He said then that this will was made to try and live in peace, anyway, and, if I died before he did, then they might fight it out. * * * It was a will on paper, but it was not his intention. It was not his heart's desire, by any means. * * * That it was not his wishes—not his wishes—that he had made that will. It was to keep peace in the family." pears that this witness could not und the Swedish language, and the testa preference, used that language, and spoke in it when talking with Swede the other subscribing witness, Hedlu of that nationality. It also appea Worden was totally deaf in his left e partly so in the right. One witnes quist—relates of testator's staying ove with him on one occasion in 1897, that time he complained a good deal relations with his family. He said, if $1,000, he would never go to stay wit again, for he could not stand the p and that "when he left my house he go right to Holdrege, and get his divo he couldn't stand it any longer." Th witness relates a subsequent conv at Davidson's house, where he com of his oldest son by the second wife, carrying away property given him mother. Testator then said, as stated witness, "that when Albert drove a told the old lady that he didn't want that any more; that they shall not g of the children any more than the them. They should leave the prope way it is until after our death. T shall have equal share. All our childr have an equal share." Renquist's w tifies to a similar conversation, exce her statement indicates Davidson s "my children," instead of "our childr son-in-law—Carlson—testifies to a go of trouble between the testator and h in reference to the conveyance of a the son Albert in the year 1895, but absolutely nothing with reference will. Some hundreds of pages of e were taken from 43 witnesses sworn, only direct reference to the will, the o timony tending in any way to establi endeavor on the part of the benefici induce the making of this will, ha stated. The rest of the contestants' e relates to the general management business of the farm, and indicates a participation in it on the part of the family, especially the wife, with so agreements, but, on the whole, a authority and control on the part of t tator down to the end of his life. Th ily of testator at the time of making t consisted of two sons and two daugh a former wife, all of whom were n and settled in his neighborhood. The also his wife and present widow, t ponent, Caroline Davidson, and her ni dren, all of whom are expressly na the will, and of whom the three y were then aged 7, 6, and 3, respe As before stated, he was then 69 y age, and, Mr. Hedlund states, was bust. It appears that for many ye had done very little work on the far

Digitized by Google

self, but "went around and looked after it." A witness testifies that about two years before his death he came to witness' office in Holdrege, and asked to get some writing done, and was asked if it was a will, and replied, "No, I have one." During his last illness his physician, Dr. Sundbury, informed him of his critical situation, and told him, if his business affairs were not arranged, he had better "straighten them up." "He just stated that his affairs were all right." This was in December, 1898, and he died January 11, 1899.

The court, at the trial, gave an instruction (No. 14) to which no exception was taken. It was to the effect that a will cannot be set aside by the declarations of the testator alone; that such evidence was not admitted for the purpose of showing undue influence, but the condition of testator's mind. If the jury found the declarations had been made, they might be considered, together with the other evidence, to corroborate other proof, but were not sufficient of themselves to sustain the charge of undue influence. Applying this doctrine to the case, it certainly seems that there is no evidence of undue influence here. There are two things, and no more, in this case, to which appeal can be made—one the declarations of the testator, and the other the disinheriting of the older children. It cannot be said that the latter action on the part of an old man with a young family and a wife, whose business ability, at all events, is unquestioned, is so unreasonable as to call for explanation. If one was needed, it seems to be found in an almost morbid desire that the property he had accumulated should be kept together. That he should provide for its remaining together during the mother's lifetime, and go to provide for his young family in preference to the self-dependent children, is not a circumstance which can be allowed weight as independent proof of coercion.

The declarations of the testator to the witness Worden cannot be held admissible as res gestæ. They were evidently no part of the making of the will. They occurred at a different place, in the absence of the other subscribing witness, and after the complete execution of the instrument, and, so far as they go, recognize it as already made. The declarations are of no more force than if made at any subsequent time, except as their nearness to the time of making the will makes their application to it more vivid. They are no more a part of the transaction of making the will than if made the next day, or, for that matter, the next year. It seems to have been error, therefore, to characterize these declarations, made a short time after the completion of the will, as a part of the res gestæ.

Many distinguished writers have regretted that English and American Law does not allow the statements of deceased persons of good credit as to matters within their knowledge, and as to which they had no motive to falsify, to be given in evidence to establish the truth of the thing stated. It is not believed, however, that any good authority for so doing can be cited from the courts, and certainly none is disclosed by the able and exhaustive briefs of counsel in this case. It seems clear, therefore, that at the very utmost these declarations of the testator were only admissible for the purpose of disclosing the state of his mind thus shortly after making the will; that is, they could be used, if there was independent proof of coercion, to show that the action of making the will was influenced by such coercion. They are no proof of such coercion itself, nor of the truth of the statement that the object was to keep peace in the family. As before stated, without these declarations there is absolutely no proof of coercion or undue influence. All of the other evidence is fully as compatible with the hypothesis that the will was not desired by the proponent, but was reluctantly accepted by her instead of the immediate assistance to her sons, which there is some indication that she desired. There being no independent evidence of undue influence, the admission of these declarations was error. The peremptory instruction for the verdict asked by plaintiff should have been given.

It would seem, also, that the learned trial court erred in permitting the contesting sons and daughters to testify as to what they had received from their father. Section 329 of the Code provides that no one having a direct legal interest in an action against a representative of a deceased person shall testify to any transactions with deceased unless his evidence, or that of some witness as to such transactions, has been introduced by the opposing party. The evidence was admitted and is sought to be justified as contradicting the recital in the will. This recital was apparently deemed by the learned trial court to be equivalent to evidence of the deceased. It does not seem possible to so regard it. Contestants are denying this is testator's will, and claiming it was the result of coercion. Until it shall be established as such will, it is no more than a claim, and is no more proof of its recitals than is the petition for its probate.

Instruction No. 12 asked by the contestants, and given by the court, seems somewhat too broad, and liable to be prejudicial, especially in view of the admission of testator's declarations. It is, in effect, that, if the testator made the will only for the purpose of keeping peace in the family, the verdict should be for contestants. This can hardly be the law. Keeping peace in one's family can scarcely be an unlawful or immoral object. There would seem to be no legal objection to a testator's devising his property for that sole purpose if he deliberately concludes of his own free will that such is his best policy. Of course, he must not have been coerced into making it. The peace

Digitized by Google

which alone it is sought to restore must not have been broken in order to force the making of such a will, but the peace of a family is often disturbed over other matters than wills. The right to freely dispose of one's property must include the right to do so in such a way as to maintain the family peace, and even the making of that one's sole object. In this case, if the wife was insisting, as was her right, upon present help being given to these maturing sons, why might not the father, instead of yielding to her wishes, make this will? If he did it without solicitation or request from her, and at his suggestion she accepted it as a substitute for her real wish, what possible objection could be urged against it? Would it make any difference that his sole motive was desire to escape from the importunity for immediate assistance, provided that such importunity had been raised with no such object in view?

It is asked that this court reinstate the probate of the will allowed by the county court, and enter final judgment in this cause. This request is based upon section 594 of the Code, providing for such judgment to be rendered here as the trial court should have rendered, or that the cause be remanded. Without at this time indicating what power this court has to enter a judgment without at least a formal verdict in a jury case, where there has been no waiver of a jury trial, it would seem that justice requires that contestants, if they desire, be permitted an opportunity to present their evidence in accordance with the views herein expressed.

It is therefore recommended that the judgment of the district court be reversed, and the cause remanded for further proceedings.

DAY and KIRKPATRICK, CC., concur.

Reversed and remanded.

CHAPMAN v. WAGNER et al.

(Supreme Court of Nebraska. July 10, 1901.)

NOTES—PAYMENT—TENDER—LACHES.

1. A series of notes were made payable at the office of Russell & Holmes, who were private bankers. The amount due upon the notes was paid into the bank as they matured, but the bankers did not have possession of the notes. *Held*, that payment to the bank did not discharge the payor in the absence of the other circumstances stated in the opinion.

2. The payment of a note at its maturity at the place where the same is made payable is a sufficient tender of payment to stop interest.

3. Evidence examined, and *held* to show laches on the part of the plaintiff of such a character as to defeat his claim.

Commissioners' Opinion. Department No. 3. Appeal from District Court, Johnson County; Stull, Judge.

"Not to be officially reported."

Action by Theodore S. Chapman against William Wagner and others. Judgment for defendants, and plaintiff appeals. Affirmed.

Charles E. Magoon and L. C. Chapma appellant. S. P. Davidson, for appellee

DUFFIE, C. In 1862, Prentiss D. C sold to Nancy E. King a quarter secti land in Johnson county, Neb., and exe a written contract of sale therefor. B terms of this contract he was to exec deed for the land when one-half the co price was paid, and take back a mo securing the unpaid portion of the chase money. This contract came by a ment to the appellee Wagner, who, upo ment of one-half the contract price fo land, demanded a deed, and tendered a gage back for the deferred payments. ney refused to make a deed to the ses, whereupon Wagner commenced an for specific performance, and obtained cree. See 16 Neb. 202, 20 N. W 222. the decree Wagner withdrew from the of Russell & Holmes, where the no Mrs. King given for the purchase pr the land were made payable, and wh had deposited the money falling due o notes, the sum of $290. Thereupon C filed a petition asking the court to set the decree for specific performance a dismiss that action. The district cou creed that Wagner should pay to the of the court the sum of $290 for the Cheney, with interest thereon at 7 per per annum, in default of which the for specific performance should be set On appeal to this court the decree was ified so as to require Wagner to pay in at the rate provided in the contract o chase, and all costs of both courts, a sum of $100 to Cheney's attorneys. Neb. 310, 50 N. W. 13. The fact, not in argument, that Wagner was shortly this adjudged to be insane, and com to the hospital for the insane, offers parent excuse for his conduct. Ther it appears from the evidence in the before us, Wagner paid the remaining representing the unpaid portion of th chase price of the land to the bank o sell & Holmes, where, as before state notes were made payable. Cheney, w ed in Illinois, neglected to forward the to the bank, and, as he testifies, neve knowledge or notice until after the mencement of this suit that the mone upon the notes had been paid by Wag the bank. July 25, 1895, Cheney comm this action to foreclose the mortgage by Wagner to secure the five principal for $100 each, representing one-half th chase price of the land, and five in notes, representing the interest maturi the principal notes, which remained at the date he commenced his action specific performance. Wagner having b insane in the meantime, S. P. Davidso appointed guardian ad litem, and filed swer, which it is not necessary to set length, and in which it is alleged that

Digitized by Google

sell & Holmes, at whose office the notes were made payable, were the agents of Cheney for the collection of the notes; that payment of the amount due on all the notes, both principal and interest, had been made to these agents, and the debt wholly satisfied and discharged. The district court entered a decree dismissing the plaintiff's bill, and from this decree the plaintiff has appealed to this court. Pending the appeal the appellant died, and the action has been revived in the name of Theodore S. Chapman, his executor.

Prior to the commencement of this action, and in 1892, Russell & Holmes, to whom Wagner had paid the money falling due upon the notes secured by the mortgage sought to be foreclosed in this suit, became insolvent, and the money paid thereon is lost beyond recovery, and the loss must be borne by either Wagner or Cheney. If Russell & Holmes were the agents of Cheney, the payment to them by Wagner was a payment which would discharge the mortgage; otherwise the notes and mortgage are still valid and subsisting claims, unless the facts hereafter mentioned are sufficient to except this case from the general rule. The appellee does not claim that, because the notes were by their terms made payable at the office of Russell & Holmes, this of itself made Russell & Holmes the agent of the payee for the receipt of the money. He admits that the law is settled to the contrary. He relies on other matters to establish the right of Russell & Holmes to receive payments of the notes for Cheney. Among the other facts shown by the evidence, and which he insists establishes such agency, is the showing that Cheney furnished the blanks on which the notes were made, that the notes are in his own handwriting; that the notes taken as the consideration for numerous other contracts for the sale of lands made by Cheney to other parties were all made on similar blanks, in which the office of Russell & Holmes was designated as the place of payment. It was also shown that Cheney kept an account with Russell & Holmes, that they made large collections for him, paid taxes on his lands, and transacted other business; all of which, taken together, he insists is sufficient to sustain the finding of the district court that Russell & Holmes were the agents of Cheney, and that a payment to them was a good payment. It is also shown that Russell & Holmes, after full payment of the notes to them, wrote Cheney that the money was in their possession, and demanded a release of the mortgage. Cheney claims that he never received this letter.

The rule appears to be settled beyond controversy that designating a place of payment in a note or bill is simply for the convenience of parties. In a somewhat extended examination of the authorities we have been able to find but one case holding that payment of the note at the place designated was a discharge of the payor, when the note was not deposited at the appointed place of collection. The Supreme Court of Iowa in Lazier v. Horan, 55 Iowa, 75, 7 N. W. 457, 39 Am. Rep. 167, held that, when a note was made payable at a bank, a payment made to the bank on the day when the note matured was a good payment, and discharged the maker, even though the bank failed, and the money never reached the hands of the payee. It is intimated in the opinion that this rule will be applied only in cases where a bank is designated as the place of payment, and in subsequent cases the same court has held that the rule will not be applied where the office of a party, or place other than a bank, is designated. The question is discussed and determined in Cheney v. Libby, 134 U. S. 68, 10 Sup. Ct. 498, 33 L. Ed. 818; and Adams v. Hackensack Improvement Company, 44 N. J. Law, 638, 43 Am. Rep. 406, contains a very full review of the cases on the subject, all agreeing that payment made at the place designated does not discharge the maker, unless the note is there to be surrendered to the payor. We have examined with care the evidence offered to show a general agency on the part of Russell & Holmes to act for Cheney, and to receive payments on these notes on his behalf. With a desire, we confess, to find some evidence which would sustain the finding of the trial court, we have read and re-read the evidence. We can find nothing which, to our mind, will uphold a finding that Russell & Holmes were the agents of Cheney, except in special cases, where he instructed them to act for him in the payment of taxes, etc.; special directions, apparently, being given in such instance. There is no evidence to show that they had any general authority to transact his business, or that any payments made to them on his behalf was placed to his credit until the particular note on which the money was to be paid was received from him. The deposit slips issued to Wagner when he made payment show that Russell & Holmes held the money on his account, being in the following form: "Deposited with Russell & Holmes, Bankers, Tecumseh, Nebr., Oct. 22, 1885. By Wm. Wagner, Currency $130.00 for Nancy E. King, notes to P. D. Cheney." The authorities are agreed where the maker of a note made payable at a particular place has the fund at such place ready to discharge the note at its maturity, he cannot be made responsible for any future damages, either as costs of suit or interest for delay. Ward v. Smith, 7 Wall. 447, 19 L. Ed. 207; Cheney v. Libby, 134 U. S. 68, 10 Sup. Ct. 498, 33 L. Ed. 818; Davis v. Parker, 14 Allen, 94. But the only effect of such a tender, or of a deposit of the money, is to relieve the payor from further interest or costs.

There are other matters in evidence, however, which, in our opinion, support the decree of the district court. The evidence is undisputed that Russell & Holmes, after the full amount due upon the mortgage had been

Digitized by Google

paid into their bank for the use of Cheney, and in the year 1889, wrote him to that effect, and demanded a release of the mortgage. As before stated, Cheney claims never to have received this letter, but the fact that it was inclosed to him in an envelope on which was printed a direction to return to the bank if not delivered, the fact that suit to foreclose was delayed until just before the running of the statute of limitations, and after it became apparent that Russell & Holmes were insolvent, and all the circumstances surrounding the case lead us to believe that he must have known that the money was there subject to his call. He had an account with Russell & Holmes, as he himself admits, and in the settlement of that account it is very improbable that he would neglect to ask an accounting for such sums as had been paid into the bank on the numerous notes taken by him from Wagner and other parties, and made payable at the bank. If his own version of the matter is strictly accurate, it displays such laches on his part as requires him, in our opinion, to suffer the loss, rather than one now insane, who was not only ready to pay at the time and place appointed, but who actually deposited the money, and requested him to accept it.

We recommend that the decree of the district court be affirmed.

ALBERT and AMES, CC., concur.

Affirmed.

REED v. BURG.

(Supreme Court of Nebraska. Dec. 4, 1901.)

CORPORATIONS—INSOLVENCY—LIABILITY OF STOCKHOLDERS—ENFORCEMENT.

1. In this state an action at law cannot be maintained by a creditor of an insolvent corporation against a stockholder in such corporation for his unpaid subscription. Such action can only be maintained by a bill in equity for the benefit of all the creditors of such corporation and against all the stockholders thereof whose subscriptions are unpaid.

Commissioners' Opinion. Department No. 2. Error to District Court, Pawnee County; Stull, Judge.

"Not to be officially reported."

Action by Franklin E. Reed against Michael R. Burg. Judgment for defendant, and plaintiff brings error. Affirmed.

Story & Story and Paul Merrill, for plaintiff in error. Lindsay & Raper, for defendant in error.

OLDHAM, C. This was an action at law instituted by the plaintiff in error against the defendant in error in the district court of Pawnee county, Neb., for the purpose of recovering from the defendant the amount of his stock and his unpaid subscriptions for stock in the Blaine Gasoline Engine & Thresher Company, a Kansas corporation. The petition states that the Blaine Gasoline Engine & Thresher Company, a Kansas corporation, was organized in November, 1895; that the defendant Michael R. Burg subscribed for and became the owner of five shares of stock in said company of the par value of $100 each, that he paid thereon the sum of $100, and that he is still the owner of the said five shares. It also alleges that the total amount of stock in said company was $150,000. It alleges that on February 25, 1896, plaintiff recovered a judgment against the Blaine Gasoline Engine & Thresher Company in the court of common pleas in Wyandotte county, Kan., on a note and account for the sum of $843.15, with interest and costs, in a cause then pending in the court of common pleas of Wyandotte county, Kan., wherein the plaintiff, Franklin E. Reed, was plaintiff and the Blaine Gasoline Engine & Thresher Company was defendant. A certified copy of this judgment is attached to the pleading, and made a part thereof. The petition further alleges that an execution was returned unsatisfied on said judgment, and that the corporation has no property or assets of any kind from which plaintiff's debt can be satisfied except the several amounts remaining unpaid from the stock subscribed, and that the directors have not and will not make an assessment on the unpaid stock for the satisfaction of plaintiff's debt. The petition then sets out the provisions of section 32 of chapter 23 of the General Statutes of Kansas of 1868, as follows: "If any execution shall have been issued against the property or effects of a corporation, except a railway or a religious or charitable corporation, and there can not be found any property whereon to levy such execution, then execution may be issued against any of the stockholders, to an extent equal in amount to the amount of stock by him or her owned, together with any amount unpaid thereon; but no execution shall issue against any stockholder, except upon an order of the court in which the action, suit or other proceeding shall have been brought or instituted, made upon motion in open court, after reasonable notice in writing to the person or persons sought to be charged; and, upon such motion, such court may order execution to issue accordingly; or the plaintiff in the execution may proceed by action to charge the stockholders with the amount of his judgment."

To this petition defendant filed a demurrer for the following reasons, to wit: "First. This court has no jurisdiction over the subject of the plaintiff's alleged cause of action, for the statutory liability of stockholders in a foreign corporation cannot be enforced except at the domicile of the corporation, when the law of the domicile provides the remedy. Second. There is a defect of parties defendant, in that all the stockholders of the Blaine Gasoline & Threshing Company are not made defendants. Third. The peti-

¶ 1. See Corporations, vol. 12, Cent. Dig. §§ 1055, 1102, 1105, 1111.

tion does not state facts sufficient to state a cause of action against this defendant." This demurrer was sustained by the court below, and, plaintiff refusing to further plead, his petition was dismissed, and he now brings error to this court.

In examining this petition we are confronted with the proposition that there is no allegation or attempted allegation of the jurisdiction of the "court of common pleas of Wyandotte county, Kansas," either over the person of the defendant or the subject-matter of the action on which its alleged judgment was rendered. The transcript of judgment attached to the petition does not pretend to recite any service on or appearance of the defendant; and, if this lack of allegation of jurisdiction of either the subject-matter or the parties to the judgment is upheld, it can only be done by this court taking judicial notice of the general jurisdiction of the court of common pleas of Wyandotte county, Kan., and supplying the want of allegations in plaintiff's petition by a presumption of the regularity of the judgment of that court. The question, then, is, is the court of common pleas of Wyandotte county, Kan., a court of whose general jurisdiction we should take judicial notice? This question should be examined by the light of the decisions of our own court, as well as the decisions of the neighboring states and the opinions of text-writers. The question was before this court in the case of Tessier v. Englehart & Co., 18 Neb. 167, 24 N. W. 734. There the question was raised by the answer of the defendant, who pleaded as one of his defenses a judgment of the superior court of Cook county, Ill., without alleging the jurisdiction of that court. Cobb, C. J., in rendering the opinion, said: "This defense was demurrable in not alleging either that the superior court of Cook county, Illinois, is a court of general jurisdiction, or that it had jurisdiction of the subject-matter of said judgment or of the person of said defendant. Said court, being a foreign tribunal, in the sense of the law and the authorities, such allegation was necessary, and its absence could be taken advantage of either by demurrer or by objection to the introduction of testimony under that paragraph of the answer, and perhaps in other ways." The question was again before this court in Specklemeyer v. Dailey, 23 Neb. 101, 36 N. W. 356, 8 Am. St. Rep. 119. In this case the judgment pleaded was of the circuit court of Boone county, Ind., and no jurisdiction was alleged. Reese, C. J., in the opinion, referring to Tessier v. Englehart, supra, says: "We have no doubt of the correctness of that decision, but do not deem it authority in this case. There is nothing in the title of the court referred to which by its terms would indicate that it is a court of general jurisdiction, and therefore it was necessary that the facts conferring such jurisdiction should be pleaded. But in the case at bar the allegation that the judgment was rendered by the Boone county circuit court, in the state of Indiana, was a sufficient allegation that the court rendering the judgment was a court of general jurisdiction." The opinion in this case is grounded on the authority of Jarvis v. Robinson, 21 Wis. 523, 94 Am. Dec. 560, which says that, where the title "clearly indicates a court of general jurisdiction, it must be so understood"; and also on the authority of Shotwell v. Harnson, 22 Mich. 410, and Butcher v. Bank, 2 Kan. 70, 83 Am. Dec. 446. In each of these latter cases the doctrine of recognition was founded on the fact that the courts recognized had general jurisdiction conferred upon them by the Constitutions of their several states, and that we should take judicial notice of the Constitution of a sister state. Black on Judgments, vol. 11, § 875, says: "And it is further to be observed that, if the court rendering the judgment was one of limited inferior or statutory jurisdiction, or if the proceedings were in derogation of the common law, jurisdiction will not be presumed, but must be affirmatively shown by the face of the record, or fully and distinctly pleaded and proved." In the case at bar it is conceded that the court of common pleas of Wyandotte county, Kan., is a court constituted by legislative enactment, and is not a court whose general jurisdiction is conferred by the Constitution of the state of Kansas. In Commonwealth v. Blood, 97 Mass. 538, the Supreme Court of that state refused to recognize a decree of divorce granted by the district court of the Fourth Judicial District of California in the absence of an allegation showing that that court had jurisdiction over the subject of divorce, saying: "Its jurisdiction over the subject of divorce is a special authority not recognized by the common law, and its proceedings in relation to it stand on the same footing with those of courts of limited and inferior jurisdiction." Of similar import have been the holdings in Gay v. Lloyd, 1 G. Greene, 78, 48 Am. Dec. 499; Gums v. Howell, 27 Ala. 663, 62 Am. Dec. 785; Pelton v. Planter, 13 Ohio, 209, 42 Am. Dec. 197.

While it is true that most of the states take judicial notice of the Constitutions of sister states, and because of this fact take notice of the general jurisdiction conferred by the Constitutions on the courts of the several states, yet it is also true that the courts of one state will not take judicial notice of the statutes of another state; and it therefore follows that, when a judgment of a court of a foreign state is alleged upon, and such court is one which has no general jurisdiction conferred upon it by the Constitution of such state, its jurisdiction should be specifically alleged.

It follows, from the above course of reasoning, that the petition in the case at bar falls within the rule announced in Tessier v. Englehart, supra, and not within the rule

Digitized by Google

in Specklemeyer v. Dailey, supra, and it is fatally defective, unless it states a good cause of action under our own laws. This action could not be maintained under the laws of the state of Nebraska, because by a well-defined line of decisions this court has held that the unpaid subscriptions of stockholder's of an insolvent corporation is a trust fund for the benefit of all the creditors of the corporation, and that one creditor cannot maintain an action at law against a stockholder in an insolvent corporation for his unpaid subscription, but that such action can only be maintained by a bill in equity for the benefit of all the creditors of the corporation and against all the stockholders of such insolvent corporation whose subscriptions are unpaid. Farmers v. Funk, 49 Neb. 353, 68 N. W. 520; German National Bank v. Farmers, 54 Neb. 593, 74 N. W. 1086; Van Pelt v. Gardner, 54 Neb. 701, 75 N. W. 874; Hastings v. Barnd, 55 Neb. 93, 75 N. W. 49; Pickering v. Hastings, 56 Neb. 201, 76 N. W. 587.

It is therefore recommended that the judgment of the district court be affirmed.

POUND and SEDGWICK, CC., concur.

Affirmed.

FREMONT PACKAGE MFG. CO. v. STOREY et al.

(Supreme Court of Nebraska. Jan. 8, 1902.)

CORPORATIONS—INSOLVENCY—SUIT AGAINST STOCKHOLDERS—PARTIES.

1. When a bill in equity is filed by the creditors of an insolvent corporation for the purpose of subjecting the unpaid subscriptions to the capital stock of such corporation to the payment of the corporate debts, it is necessary that each one of the delinquent subscribers to such capital stock be made a party defendant; and unless all are made parties defendant, or some good and sufficient reason appears upon the face of the petition, such as death, insolvency, or inability to reach with the process of the court the delinquent subscribers not joined as defendants, the petition is bad because of a nonjoinder of parties defendant.

Commissioners' Opinion. Department No. 2. Appeal from District Court, Madison County; Robinson, Judge.

"Not to be officially reported."

Bill by the Fremont Package Manufacturing Company against P. C. Storey and others. Judgment for plaintiff, and N. A. Rainbolt, defendant, appeals. Reversed.

Powers & Hays, for appellant. F. P. Wigton, Geo. L. Whitham, and Barnes & Tyler, for appellee.

OLDHAM, C. This was a suit by bill in equity instituted by the Fremont Package Manufacturing Company to recover from the defendants, P. C. Storey, H. W. Brooks, C. B. Burrows, N. A. Rainbolt, and D. Rees, the amount of their unpaid subscriptions to the capital stock of the Norfolk Creamery & Commission Company. The substant legations of the petition are that the was instituted in behalf of the plaint all creditors of the Norfolk Creamery & mission Company; that the said co was a corporation duly organized und laws of the state of Nebraska. The p then alleges that the plaintiff procure ment against the Norfolk Creamery & mission Company before a justice peace, and that execution was return satisfied on said judgment; that the c tion is insolvent, and has ceased to d ness as a corporation. It also sets fact that the defendants were subscri the capital stock of the corporation, a no part of their stock has been pa prays judgment against each of the ants for the amount of his unpaid su tion. The Creamery Package Manufa Company, a corporation, and the State Bank, filed intervening petitio ting up substantially the same facts a alleged by the plaintiff, and asked for relief. A demurrer was filed to the tions, alleging misjoinder of both partie tiff and parties defendant, and that t tion failed to state any cause of action the answering defendants. The de was overruled, and defendants Rainb Burrows each filed separate answers ing, among other things, the misjoi parties plaintiff and parties defendan fendant Burrows also filed an amen swer, by leave of court, before the the cause, and specially pleaded the f the judgment of the plaintiff and th vener Creamery Package Manufa Company had each become dormant son of the fact that no execution h issued on either of said judgments f than five years before the filing amended answer, and that said jud had not been revived. Plaintiff an veners filed replies in the nature of eral denial to the allegations of defe answer. Judgment was rendered i of the plaintiff and each of the inte against defendant Rainbolt for the $2,000, the amount found by the cou due from him on his unpaid subscripti also judgment was rendered for $500 of the same parties against defenda rows, the amount found by the cou due from him on his unpaid subsc There was a finding in favor of de Rees on his answer denying that he b scribed for any stock in the corporati there appears to have been no finding kind with reference to defendants Sto Brooks. From this judgment of the court defendants Rainbolt and Burrow prosecuted an appeal to this court.

This court has held, by a well-defi of decisions, that an action of this can only be maintained when prosecu the benefit of all the creditors of an i corporation against all the stockhol

¶ 1. See Corporations, vol. 12, Cent. Dig. § 1111.

Digitized by Google

such insolvent corporation whose subscriptions are unpaid. Farmers v. Funk, 49 Neb. 353, 68 N. W. 520; German Nat. Bank v. Farmers, 54 Neb. 593, 74 N. W. 1086; Van Pelt v. Gardner, 54 Neb. 701, 75 N. W. 874; Hastings v. Barnd, 55 Neb. 93, 75 N. W. 49; Pickering v. Hastings, 56 Neb. 201, 76 N. W. 587. The orderly and proper method of procedure in an action of this nature is by a suit instituted by a receiver of the insolvent corporation for the benefit of all the creditors and against all the delinquent stockholders. While this court has intimated that the action may be brought either by a receiver or by a creditor for the benefit of himself and all the creditors, we think the practice of first procuring the appointment of a receiver before the action is brought much preferable, as it at once sets at rest all question as to the proper joinder of parties plaintiff in the cause of action.

In the case at bar it is objected to the petition that there is no allegation that there are any other creditors than the plaintiff, although the petition purports to be filed on behalf of plaintiff and all other creditors of the insolvent corporation. Without expressing an opinion as to the sufficiency of this objection, we think it would have been well for the pleader to have made some allegation that would have disclosed to the court what, if any, knowledge it had as to the existence of the claims of other creditors against this corporation.

A more serious question is presented as to the sufficiency of the petition by the objection raised by demurrer, and saved in the answer, as to the misjoinder of parties defendant. There is no allegation in the petition that the defendants sued were all the stockholders of the insolvent corporation whose subscriptions were unpaid; and when plaintiff and interveners, for the purpose of sustaining the allegations in the petition, introduced the stock subscription of the insolvent corporation, it disclosed the names of three of the subscribers for this stock whose subscriptions appear as unpaid in the same manner as that of the defendants who were sued. No reason is attempted to be assigned in plaintiff's petition for the failure to join these parties as defendants in this cause of action. Under the rule established in this state this action must be brought against all the delinquent stock subscribers, and, if all are not made parties defendant, a good and sufficient reason should be set forth in the petition for not doing so, to warrant a recovery against any. The rule established in this state is supported by strong authority in the decisions of other states, and, commenting upon this rule, the Supreme Court of Michigan, in Dunston v. Hoptonic Co., 83 Mich. 384, 47 N. W. 322, says: "This seems to be the rule as established by the great weight of authority, and I think is the just, reasonable, and equitable one. Any other rule would permit the creditor of the corporation to select one or only a few of the stockholders within the jurisdiction and compel payment by them of all debts of the corporation, at least up to the unpaid balance of their subscription, and such subscribing stockholders, in order to compel the others to contribute, would be remitted again to the court, thus leading to a multiplicity of suits." To the same effect is the holding in Alder v. Manufacturing Co., 13 Wis. 57; Clarke v. Cold Springs Opera-House Co. (Minn.) 59 N. W. 632; Thompson on Corporations, § 3493.

We think there is no escaping the conclusion that, when a bill in equity is filed by the creditors of an insolvent corporation for the purpose of subjecting the unpaid subscription to the capital stock of such corporations to the payment of the corporate debts, it is necessary that each one of the delinquent subscribers to such capital stock be made a party defendant; and unless all are made parties defendant, or some good and sufficient reason appears on the face of the petition, such as death, insolvency, or inability to reach with the process of the court the delinquent subscribers not joined as defendants, the petition is bad, and because of a misjoinder of parties defendant. As this will dispose of the case, the objection urged against two of the judgments alleged on by plaintiff and one of the interveners, that the judgments had become dormant during the pendency of the suit and before trial, need not now be determined.

It is therefore recommended that the judgment of the district court be reversed, and that the petition of the plaintiff, the Fremont Package Manufacturing Company, and the intervening petitions of the Creamery Package Manufacturing Company and the Norfolk State Bank, be dismissed.

POUND and SEDGWICK, CC., concur.

Reversed, with directions.

LOWE v. STATE.

(Supreme Court of Wisconsin. Sept. 8, 1903.)

ASSAULT WITH INTENT TO KILL—CONTINUANCE — JURISDICTION — LAW — OBJECTIONS —WAIVER — WITNESSES — CROSS-EXAMINATION—EVIDENCE — EXPERTS — INSANITY — PHYSICIANS — QUALIFICATIONS — HYPOTHETICAL QUESTIONS—INSTRUCTIONS — INTENT—REFUSAL—PRESUMPTIONS.

1. Where, after a jury impaneled to try a plea of insanity in a prosecution for assault with intent to kill had disagreed, the court required that the trial on defendant's pleas of insanity and not guilty should proceed, whereupon an order was entered, with defendant's consent, continuing the case until the next term of court, such continuance did not devest the court of jurisdiction of the prosecution.

2. Where defendant was charged in the information with an assault on L. with a loaded revolver and razor, "with intent then and there, feloniously, and of his malice aforethought, to kill and murder" the said L., a verdict "We, the jury impaneled to try the issues in the above-

Digitized by Google

entitled action, find defendant guilty," was not defective.

3. Where, on a prosecution for assault with intent to kill defendant's wife, a witness had testified on cross-examination that she might have said on the former trial that on the morning of the assault defendant looked considerably paler than usual, that he had one of his funny jealous spells, and that she thought he was jealous, etc., the exclusion of a further question as to whether she had not stated that he had jealous spells about every two weeks, on the ground that it was improper on such cross-examination to go generally into defendant's life in support of his plea of insanity, was not prejudicial error.

4. Where, in a prosecution for assault with intent to kill, B., a witness for the state, testified that he saw defendant buying a revolver and a box of cartridges at a hardware store prior to the commission of the offense, and that on such occasion defendant stated to witness that he "was having a hell of a time with the old woman," that he had "drawn the wood away from the house, and she could freeze to death," etc., and that defendant did not appear to have been drinking at the time, it was error for the court to exclude a question asked of another witness, to whom B. related such conversation, as to whether B. did not state at the time that he believed that defendant was insane, for the purpose of laying a foundation of B.'s contradiction.

5. Where, in a prosecution for assault with intent to kill, a medical expert, in answer to a hypothetical question, testified that in his judgment accused was insane at the time of the shooting, it was error for the court to ask the witness as to his opinion of the sanity of the "300 men who burned a negro at the stake in Colorado; stood there, and lighted the fire; and stood by when he was begging to be shot; waited around, and watched the flames lick up his body."

6. An irrelevant question asked of a witness by the court in a criminal prosecution cannot be reviewed on an appeal, in the absence of objections and an exception.

7. Where a witness was a graduate of a regular medical college, with a license to practice medicine from the state board, had practiced 18 months, and had an opportunity to see and study insanity patients during his medical course, and during his practice had treated four such cases, he was competent to testify as an expert on insanity in a criminal case.

8. Rev. St. 1898, § 585, providing the qualifications of a physician as a condition to his appointment as an examiner in lunacy, does not apply to physicians as expert witnesses; and hence the fact that a physician had not practiced his profession for a sufficient length of time to entitle him to be appointed an examiner, under such statute, did not disqualify him from testifying as a witness as an expert on insanity.

9. Where, in a prosecution for assault with intent to kill defendant's third wife, there was no evidence that for a period of 12 months immediately preceding his second marriage defendant kept company with the woman who afterwards became his second wife, at which time he had a wife living, and she a husband living, neither being divorced, a hypothetical question asked of a medical expert, assuming such facts, and asking whether or not that would strengthen his opinion as to defendant's sanity, was improperly allowed.

10. Where, in a prosecution for assault with intent to kill, defendant pleaded insanity, nonexpert witnesses, who were acquainted and had dealt with accused, and seen him at his shop at various times, were entitled to give their opinion as to his sanity.

¶ 10. See Criminal Law, vol. 14, Cent. Dig. § 1045; Evidence, vol. 20, Cent. Dig. § 2242.

11. In a prosecution for assault with in kill, an instruction that if the jury b beyond a reasonable doubt that defenda his wife, and cut her throat, as charg natural consequence of such acts wo the wife's death, and that defendant sound mind at the time, then the presu of law was that defendant committed s sault with intent to kill his wife, and assault, under such circumstances, wa with a premeditated design to effect the death, the defendant, being sane at th was guilty, was not erroneous, as chargi defendant's intent arose as a presump law; since the instruction required in c convict, that the jury "find" that the ac tioned were done with premeditated de effect the wife's death, and that the and probable consequence of such act w death of the wife.

12. An instruction that insanity mea a perverted and deranged condition of and moral faculties as to render a pe capable of distinguishing between rig wrong, or not conscious at the time nature of the act which he is committi where, though conscious and able to dis between right and wrong, yet his will h otherwise than voluntarily destroyed, so actions are not subject to it, but are his control, was proper.

13. Where the facts relating to insanit suit to set aside a will, and those on a t assault with intent to kill, in which insan alleged as a defense, were clearly distingu extracts from the opinion of the Suprem in the will case regarding insanity, whic liable to mislead the jury, should not ha read as a part of the charge.

14. It was not error for the court to re give requested instructions in a crimin which were substantially covered by the

Error to Circuit Court, Clark C James O'Neill, Judge.

James Lowe was convicted of assau intent to kill, and he brings error. Re

The plaintiff in error was charged wi ing on June 12, 1899, made an assault u wife, Amanda Lowe, while armed wit volver and razor, with the intent to k murder her. To such information he ed a plea of not guilty, and with suc he also made and filed a special plea, a his insanity at the time of the alleg fense. The special plea was tried A 1900, and the jury were unable to upon a verdict, and were thereupon d ged from further consideration of th Thereupon, and on April 25, 1900, th made an order (entered in the clerk' utes) forthwith ordering the trial to p upon both pleas—that of not guilty, a the special plea—but nothing was do til April 27, 1900, when, with the c and concurrence of the accused and torney, an order was made and ente the clerk's minutes, continuing the until the next regular term of the court, which was appointed to be October, 1900. Subsequently, a jur was had on both pleas, and at the c such trial, November 30, 1900, the j turned a verdict of guilty. The co nied successive motions to arrest the ment and for a new trial. Decemb 1900, and at the same term of the co accused was, by the judgment of the

Digitized by Google

sentenced to the state prison for the term of eight years. To reverse such judgment and sentence the accused sued out this writ of error.

It appears from the record, and is undisputed, that the accused at the time of the trial was 54 years of age; that he lived in England and Rhode Island most of the time, working in cotton mills, until he was 28 years of age, when he came with his first wife to Jackson county; that he only had three months' schooling; that he lived with his first wife about eight years, and had by her six children; that he was divorced from her; that he thereupon moved to Neillsville, in Clark county, where he was engaged in the butcher business, and where the offense was committed, and married his second wife, but was divorced from her soon afterwards; that thereupon he married his third wife, Amanda Lowe, mentioned, in March, 1897, and separated from her in September, 1897, but afterwards came back to her, and lived with her until in June, 1899; that he had no children by his second or third wife, and all three wives were women of irreproachable character, absolutely above any suspicion of infidelity; that June 10, 1899, the accused told his wife, Amanda, to pack up and go, as they could not get along together, but that instead of doing so at that time, she went to the house of her son by a former marriage, near by, and remained there until the morning of June 12, 1899, when she went back to her husband's house, and commenced to pack up; that with her at the time were Mrs. Ray Carlton and Mrs. Bertha Montgomery, daughters of Mrs. Lowe, and two small children of Mrs. Montgomery; that while Mrs. Lowe was in the bedroom, packing her belongings, where the accused was at the time, and when her back was turned toward him, he shot her in the back of the head, and she fell to the floor, and while lying on the floor he fired two or three other shots, one of which inflicted another wound in the head; that the accused thereupon walked into the kitchen, and fired two shots at himself, inflicting but slight wounds in his chin and forehead; that Mrs. Carlton thereupon ran from the house in search of assistance, and Mrs. Montgomery, who witnessed the entire occurrence, succeeded in disarming the accused of the revolver; that thereupon the accused started for the room where his wife was lying, and in spite of the efforts of Mrs. Montgomery, cut his wife's throat with a razor, severing the windpipe and the front half of the gullet, and also the anterior jugular and the right external jugular; that in such condition Mrs. Lowe, with the assistance of Mrs. Montgomery, made her escape, and succeeded in reaching the house of a neighbor, where medical assistance was procured, and she recovered; that the accused was in the habit of addressing his several wives in terms of the vilest obscenity and most disgusting profanity.

R. J. MacBride, for plaintiff in error. L. M. Sturdevant, Atty. Gen., for the State.

CASSODAY, C. J. (after stating the facts). There is no claim that the evidence is insufficient to support the verdict. Counsel for the accused insists, however, that "the evidence was amply and abundantly sufficient to carry the question of the accused's insanity to the jury." Numerous errors are assigned.

1. It is claimed that the court lost jurisdiction because two days after the jury had disagreed and been discharged on the trial of the special issue of insanity, and the court had forthwith ordered "the trial upon the plea of not guilty to proceed" as prescribed by the statute (Rev. St. 1898, § 4697), an order was made and entered, with the consent and concurrence of the accused and his attorney, continuing the cause until the next term of the court. Counsel for the accused frankly concedes that such consent and concurrence was as broad and ample as possible, but suggests that by such continuance the court lost jurisdiction. There is nothing in the statutes prohibiting such continuance, and it is very manifest that the ends of justice and the rights of the accused might imperatively require such continuance. In all criminal prosecutions, the accused is entitled, as a constitutional "right, to a speedy public trial" in "the county or district wherein the offense shall have been committed" (section 7, art. 1, Const.); and yet this court has held that such right "is waived by the accused when, upon his application, the place of trial is changed to another county." Bennett v. State, 57 Wis. 69, 75, 14 N. W. 912, 46 Am. Rep. 26; Wheeler v. State, 24 Wis. 52. Certainly, the court did not lose jurisdiction by such continuance of the case at bar. We perceive no good reason why the consent and concurrence of the accused and his attorney to such continuance was not a waiver of any objection to the same.

2. We find no reason for arresting the judgment on the ground of defective verdict. The information, with appropriate allegations, charges the accused with having made an assault upon Amanda Lowe with loaded revolver and razor, "with intent then and there, feloniously, and of his malice aforethought, to kill and murder the said Amanda Lowe." The verdict is that "We, the jury impaneled to try the issues in the above-entitled action, find the defendant guilty." Such verdict, in effect, found the accused guilty of the offense charged in the information.

3. Error is assigned because a witness for the prosecution (Bertha Montgomery) was not allowed on cross-examination to testify as to whether, on the preliminary examination, she had not stated that he had jealous spells about every two weeks. She had already testified, on cross-examination, that

Digitized by Google

she might have said on the former trial, in effect, that on the morning of the assault the accused looked pale, considerably more than usual; that he had one of his funny jealous spells; that it was a fact that she thought he was jealous; that she always said he was awfully jealous; that his look was more unusual that morning than before; that she did not expect to find him at home that morning, as she knew he was having one of his funny jealous spells; that his strange look that morning made her watch him; and that he did not look as he ought to on that morning. The ground stated for excluding such further cross-examination is to the effect that it was improper on such "cross-examination to go generally into the life of" the accused; but that the defense was at liberty to inquire as to anything connected with the conduct of the accused on the morning in question, and perhaps the evening before, or any past experience which might explain the conduct of the accused. We perceive no prejudicial error in such ruling.

4. Error is assigned because the court refused to allow the accused to prove that one Martin Bigger, a witness for the prosecution, made statements out of court contrary to his testimony in court. He testified to the effect that three or four months prior to the assault in question, the accused was at Merrillan, and he saw him buy a revolver and a box of cartridges at a hardware store; that he and the accused then walked out of the store together; that the accused said "that he was having a hell of a time with his old woman;" that he had drawn "the wood away from the house, and she could freeze to death;" that he then advised the accused to leave his wife, if he could not live in peace with her; that the accused then said, in effect, that he had quit her; "that the next time he had a row with the damned old bitch he would fill her head so full of lead that she would not know where she was standing;" that he advised the accused against doing so, and to leave her if he could not live peaceably with her; that that was the last he saw of him. On cross-examination he testified to the effect that the accused did not seem to be intoxicated, had not been drinking, did not act strange; that he met a brother of the accused, Joseph Lowe, at Merrillan before the examination of the accused before the justice; that he then told Joseph that he saw the accused buy the revolver in the hardware store, but did not think he told him all the remarks the accused made at the time; that he did not think he told Joseph to look out for the accused, that he was not right, that he believed he was insane—not exactly that; that Joseph said the accused was always crazy on the woman question; that he said to Joseph that a man must be either drunk or crazy to do such a thing as that, but did not remember of telling him that he believed the accused was insane at the time he bought the revolver; that he might have said that he thought there was something the matter with a man talking as the accused did when he bought the revolver; that he had a conversation with Joseph afterwards, at Neillsville, at the time of the examination before the justice; that Joseph then asked him what he knew about the "scrap," and he told him he was with the accused when he bought the revolver, and that a man who would do such a deed was either drunk or crazy (a remark a man would make in talking), but did not say that the accused was crazy or drunk; that he did not remember talking with Joseph again about their conversation at Merrillan; that he did not think he told him that the accused was crazy when he bought the revolver. Joseph Lowe, brother of, and witness for, the accused, testified to the effect that he had but one conversation with the witness Bigger at Merrillan about the accused buying the revolver; that that was before the shooting, and might have been at the time mentioned by Bigger; that in that conversation Bigger related to him the circumstances and conversation he had with the accused. Thereupon he was asked this question: "Did he say to you, in that conversation, that he believed the defendant was insane?" On being objected to as incompetent, irrelevant, and immaterial, the same was excluded. Counsel for the accused then insisted that, as Bigger had attempted to narrate a conversation had with the witness Joseph Lowe, he was entitled to have the whole of that conversation; but the objection was sustained. Such ruling was based upon the theory that it was "not of the slightest importance" as to "what Mr. Bigger's belief was as to the sanity of the" accused; that "the state did not call him for the purpose of asking him his opinion as to the sanity or insanity of the" accused, but that "out of liberality of cross-examination" he was permitted to make the "statement as to his belief" mentioned. It was certainly competent to cross-examine Bigger in respect to statements made by him out of court, to lay the foundation for his contradiction by way of impeachment. Perkins v. State, 78 Wis. 551, 559, 47 N. W. 827. The question recurs whether the statement sought to be contradicted was relevant to the issue.

One of the issues on trial was as to the sanity of the accused. The only hope of the accused seems to have been based upon the determination of that issue. The testimony of Bigger tended to prove that a short time before the shooting the accused bought the revolver, with the avowed purpose of shooting his wife. Of course, he could have no such intent unless he was of sane mind at the time he bought the revolver, and told Bigger what he did. Bigger had testified to the effect that the accused did not appear

Digitized by Google

to have been intoxicated, nor that he had been drinking, and did not act strange. Such testimony left the jury to infer that the accused was sane at the time he bought the revolver and made the statement mentioned, and that Bigger so regarded him. The mental condition of the accused, as he appeared to Bigger at the time, was necessarily for the consideration of the jury. Commonwealth v. O'Brien, 134 Mass. 198; Commonwealth v. Hayes, 138 Mass. 185; Smalley v. The City of Appleton, 70 Wis. 340, 344, 35 N. W. 729; Bridge v. The City of Oshkosh, 71 Wis. 363, 367, 37 N. W. 409; Keller v. The Town of Gilman, 93 Wis. 11, 66 N. W. 800. If Bigger told Joseph Lowe that he believed the accused was insane at the time he bought the revolver, then such statement was inconsistent with Bigger's testimony given in court upon a relevant issue; and hence it was competent to impeach the credibility of Bigger by showing that he made statements out of court inconsistent with those made in court. Welch v. Abbot, 72 Wis. 512, 40 N. W. 223; Waterman v. The Chicago & Alton R. Co., 82 Wis. 613, 628, 629, 52 N. W. 247, 1136. We must hold that the exclusion of such testimony was error.

5. Dr. Lyman, superintendent of the Hospital for the Insane at Mendota, was called as a medical expert witness on the part of the accused, and in answer to a hypothetical question, testified to the effect that in his judgment the accused was insane at the time of the shooting, June 12, 1899. Then, after being cross-examined by the state to the extent of 21 type-written pages, the court asked him this question: "What would you say, doctor, of the three hundred men who burned the negro at the stake in Colorado; stood there, and lighted the fire, and stood by when he was begging to be shot; waited around, and watched the flames lick up his body—what would you say about the sanity of those men?" The witness answered: "I should think they were sane; that they were acting under what we call 'mob influence' at the time, and their emotions got the better of them." We agree with counsel that the question was improper and the answer irrelevant; but it is conceded that no objection was made, much less an exception taken. This court has, from the beginning, refused to review rulings upon the trial of criminal cases, as well as civil, to which no exception was taken. Knoll v. State, 55 Wis. 249, 12 N. W. 369, 42 Am. Rep. 704; Rollins v. State, 59 Wis. 55, 17 N. W. 689; Grottkau v. State, 70 Wis. 462, 472, 36 N. W. 31; Porath v. State, 90 Wis. 537, 63 N. W. 1061, 48 Am. St. Rep. 954; In re Roszcyniialia, 99 Wis. 537, 538, 75 N. W. 167, 168. In this last case it is said: "In the trial of causes, as well as other matters conducted by human agencies, there will, unavoidably, be more or less inadvertence, irregularity, mistake, impropriety, and error. * * * By reason of these things, parties and their counsel, in criminal as well as civil cases, are required to bring any supposed impropriety or error to the attention of the court, and obtain a ruling or action thereon, at the earliest opportunity, in order to become available. Even then, the party feeling aggrieved must promptly take, and preserve in the record, his exception, or the supposed error will be deemed waived." Counsel says that "it is sometimes a delicate thing for counsel to object to a question asked by the court." The authorities all seem to agree that the trial judge has the right to ask questions of witnesses when necessary to elicit the truth. See note to South Covington & C. Street R. Co. v. Stroh, 57 L. R. A. 878 et seq.; citing numerous adjudications. But if the trial judge asks an improper question, then it becomes the duty of counsel to call his attention to it at once, so that it may be immediately corrected. By reason of the failure to make such objection and take such exception, the error in admitting such testimony is not here available to the accused.

6. Error is assigned because Dr. Conroy was permitted to testify as a medical expert. The objection is upon two grounds. One is said to be his lack of experience in such matters. It appears that he had graduated at a regular medical college, and had a license to practice medicine from the state board of this state, and had practiced therein for 18 months; that the medical college he so attended had an insane pavilion, which would accommodate about 80 patients; that while he was there he had an opportunity to see and study, and did study, about 100 such cases; that during his practice of 18 months he had had 4 such cases to treat. Such actual experience certainly made him competent to testify within the rulings of this court. Stilling v. Town of Thorp, 54 Wis. 528, 534, 535, 11 N. W. 906, 41 Am. Rep. 60; Boyle v. State, 57 Wis. 472, 15 N. W. 827, 46 Am. Rep. 41; Soquet v. State, 72 Wis. 659, 40 N. W. 391; Zoldoske v. State, 82 Wis. 580, 605, 52 N. W. 778. The other ground upon which such objection is made is that the witness was precluded by the statute, which provides that "no physician shall be appointed such examiner in lunacy" of applicants for admission to the State Hospital for the Insane, "unless he shall be a graduate of a legally incorporated medical school, and shall have had at least three years' experience in the practice of his profession, or shall have had one year's experience as physician in an insane hospital after his graduation, and shall be registered by such county judge as thus qualified on a list to be kept for that purpose in his office." Section 585, Rev. St. 1898. The proceedings prescribed by that section are special, and practically ex parte. That section does not prescribe the competency of physicians or surgeons to testify as witnesses in courts of justice. This is manifest, not only from the language of that section, but from other

sections of the statutes. Thus a physician or surgeon is precluded from the right to collect fees or compensation for services or for testifying in a professional capacity, unless he had received a diploma from a medical college, or a license from the state board of medical examiners, as prescribed. Section 1436, Rev. St. 1898. By another section of the statutes, it is provided that any person thus prohibited "from testifying in a professional capacity as a physician or surgeon" is punishable if he "shall assume the title of doctor of medicine, physician, or surgeon by means of any abbreviation, or by the use of any word, words, letter, or letters * * * or by any device whatsoever." Section 4603a, Rev. St. 1898. Schaeffer v. State, 113 Wis. 595, 89 N. W. 481; Allen v. Voje, 114 Wis. 1, 8, 9, 89 N. W. 924. We must hold that Dr. Conroy was competent to testify as a medical expert.

7. In answer to some 20 odd assumptions of fact, Dr. Conroy testified that in his opinion the accused was sane at the time of the shooting. The same witness was then asked this question: "If you were to assume that for the period of twelve months immediately preceding his second marriage, defendant kept company with the woman who afterwards became his second wife, at which time he had a wife living, and she had a husband living, and neither of them were divorced, would that strengthen your opinion as to his sanity?" It was "objected to as incompetent, and as not based upon the evidence in the case." The objection was overruled, and the accused excepted. The witness answered that "it would." Counsel for the accused denied that there was any such testimony in the record, and in his brief requested counsel for the state to point out such testimony, if there was any; but no attempt has been made to point out any such testimony, and after a good deal of examination we fail to find any. The record contains nearly 500 type-written pages of testimony. If there is any such testimony in the record, it was the duty of counsel for the state to point it out. Having failed to do so, and having failed to find any ourselves, we must assume that there is no such testimony. This being so, we must hold that the objection was improperly overruled. Upon the same assumption, and against objection, the witness answered that in his opinion the accused was able to distinguish between right and wrong June 12, 1899.

8. Error is assigned because numerous nonexpert witnesses, who testified as to their acquaintance and dealing with the accused, mostly in buying meat from him at the shop, and seeing him at various times, were allowed to give their opinion, based upon such business relations with the accused and his appearance, as to his sanity or insanity. The admissibility of such testimony is fully sanctioned by numerous and recent decisions of this court. Burnham v. Mitchell, 34 Wis. 117, 133; Crawford v. Christian, 102 51, 78 N. W. 406; In re Guardiansl Welch, 108 Wis. 387, 394, 84 N. W. 5 re Butler's Will, 110 Wis. 70, 76, 77, W. 678.

9. Error is assigned because the cour ged the jury that "if the jury believe the evidence beyond a reasonable doul the defendant did shoot his wife and c throat as charged in the informatio that the natural, probable, and ordinar sequences of such acts would be the de such wife, and that defendant was of mind at the time he committed these then the presumption of law is that t fendant did so assault his said wife w tent to kill her; and if such assaul shooting, under these circumstances done with the premeditated design to the death of said wife, the defendant sane at the time, the jury should fi defendant guilty, as charged." The p lar criticism is that, by the instruct given, the jury were told that the therein recited raised a "presumpti law" that the accused "did so assau wife with intent to kill her." Counse cedes that a person of "sound mind sponsible for the consequences of his but insists that such acts "must b done — acts accomplished"; that "th does not presume a felonious intent fr shooting," nor from "the use of deadly ons"; that the "intent, in a case of thi is a fact to be pleaded, proved, and by the jury, and is not presumed as a of law. In support of such contention sel cites, among other authorities, the ing, which are most in point: State v dow, 45 Wis. 279, 280; Roberts v. Peo Mich. 401, 414, 415; Patterson v. Sta Ga. 131, 11 S. E. 620, 21 Am. St. Rep. 15 note 155; People v. Landman, 103 Cal. Pac. 518; Abbott's Trial Brief (2d Ed.) 67 No. 74; Lawson's Presumptive Evidenc rule 66; Wharton's Criminal Evidence, In the case in this court it was held th criminal law, when a special intent, the natural consequences of the thing is essential to the crime charged, suc cial intent must be pleaded, proved found." Ryan, C. J., there said: "Sur ing circumstances generally go far to the intent. "Sometimes the very act does. Thus, if one shoot another with in a vital part of the body, the act ra presumption of intent to kill, unless t cumstances under which it is done go pel the presumption." In the Michiga cited, it was held that: "When a makes an offense to consist of an ac mitted with a particular intent, whi and intent constitute, substantially, tempt to commit a higher offense tha which was accomplished, proof of th ticular intent is as necessary as of t itself; but not, necessarily, by direc positive testimony. It may be inferre

Digitized by Google

any facts in evidence which satisfy the jury of its existence." In that case it was said by the court that "no intent in law, or mere legal presumption, differing from the intent in fact, can be allowed to supply the place of the latter." That case has received repeated sanction in that state, the latest being People v. Ochotski, 115 Mich. 601, 606, 73 N. W. 889. In the Georgia case cited, the assault was with a weapon likely to produce death, but did not; and it was held that malice in an assault by stabbing did "not raise a presumption of an intent to kill." In a note to the case, it is said that, "to constitute the offense of an assault with intent to commit murder, a specific intent upon the part of the accused to take life is necessary." In Abbott's Trial Brief, cited, it is said that: "The presumption of criminal intent, even where it has been shown that the act charged was done with the knowledge of the facts, is not a presumption of law, but is a question for the jury. It is error to instruct them that the law presumes a criminal intent. They may be instructed that from such facts they may infer criminal intent; but where a specific intent is necessary to make the act criminal, the specific intent cannot be inferred from the act." That is quite similar to Lawson's rule 66, cited above, which is that, "where a specific intent is required to make an act an offense, the doing of the act does not raise a presumption that it was done with the specific intent." But that rule is mentioned as an exception to the general rule, just previously stated, by the same author, as follows: "Where an act is criminal per se, a criminal intent is presumed from the commission of the act." Lawson's Presumptive Evidence, 327, Rule 65. In support of that rule, the author cites a number of cases, including one from Massachusetts, from which he quotes at length, and where the opinion of the court was written by Shaw, C. J., and in which it was held that, "when on the trial of an indictment for murder, the killing is proved to have been committed by the defendant, and nothing further is shown, the presumption of law is that it was malicious, and an act of murder, and proof of matter of excuse and extenuation lies on the defendant." Commonwealth v. York, 9 Metc. (Mass.) 93, 102, 43 Am. Dec. 373. The learned Chief Justice there said: "The effect of the rule presented to the jury was that, if it was proved beyond reasonable doubt that the defendant had willfully and voluntarily inflicted a mortal wound upon the deceased, malice was to be inferred from this act, unless such facts were proved, by a preponderance of the evidence, as would extenuate the homicide, and reduce it to manslaughter. This rule seems to rest on well-settled principles, and to be supported by a great weight of authorities." In speaking of what the "law presumes," in the section of Wharton, cited, it is said, in effect, that "the use of the term 'law' is ambiguous, and is likely to mislead;" that "if it be said that the use of a weapon likely to inflict a mortal blow implies, as a presumption of law, in its technical sense, a deadly design, this is error;" that "there is no such thing as a purely abstract killing;" but that, "when a person without authority, and with the appearance of deliberation, shoots another, we infer, as a presumption of fact (not of law), design;" that "taking aim at another with a gun, by a person without authority, and not in public war, and then firing, ordinarily implies an intent to kill." A standard textwriter uses this language: "Another cardinal doctrine of criminal law, founded in natural justice, is that it is the intention with which an act was done which constitutes its criminality. The intent and the act must both concur to constitute the crime. * * * And the intent must therefore be proved, as well as the other material facts in the indictment. The proof may be either by evidence, direct or indirect, tending to establish the fact, or by inference of law from other facts proved; for though it is a maxim of law, as well as the dictate of charity, that every person is to be presumed innocent until he is proved to be guilty, yet it is a rule equally sound that every sane person must be supposed to intend that which is the ordinary and natural consequence of his own purposed act." 3 Greenleaf, Ev. (15th Ed.) § 13. In speaking of "presumptions of law and presumptions of fact," the same author says that "presumptions of law consist of those rules which, in certain cases, either forbid or dispense with any ulterior inquiry"; and then divides such "presumptions of law into two classes, namely, conclusive and disputable" (1 Greenleaf, Ev. [15th Ed.] § 14); whereas, "presumptions of fact * * * differ from presumptions of law in this essential respect: that while those are reduced to fixed rules, and constitute a branch of the particular system of jurisprudence to which they belong, these merely natural presumptions are derived wholly and directly from the circumstances of the particular case, by means of the common experience of mankind, without the aid or control of any rules of law whatever. Such, for example, is the inference of guilt drawn from the discovery of" the facts therein stated. Id. § 44. While there is some confusion of statement among the adjudications on the subject, yet it is safe to say, upon the great weight of authority, as well as reason, that every sane man is presumed to contemplate the natural and probable consequences of his own voluntary acts. Applying that principle to the instruction in question, and it may still be said, with some force, as argued by counsel, that the facts recited in the instruction merely raised a presumption or inference of fact that the accused "did so assault his wife with intent to kill her," instead of a presumption of law to that effect, as stated in the instruction. And yet it is manifest that the jury

Digitized by Google

were only authorized to find such guilty intent in case they found the facts and circumstances mentioned in the instruction to be true; in other words, the presumption or inference of guilty intent was to be derived wholly and directly from the facts and circumstances of the case, as disclosed by the evidence and recited in the instruction. Under that instruction, the jury were only allowed to find the accused guilty of such intent in case they believed from the evidence beyond a reasonable doubt that the accused was of sound mind, that he "did shoot his wife, and cut her throat, as charged in the information, and that the natural, probable, and ordinary consequences of such acts would be the death of such wife"; and the same instruction, as well as other portions of the charge, required the jurors, in order to convict, to find that the accused did the acts mentioned "with the premeditated design to effect the death of said wife." Thus, the jury necessarily found that the accused did the acts mentioned "with the premeditated design to effect the death of his wife," and also "that the natural, probable, and ordinary consequence of such acts" was the death of such wife. We must hold that there was no reversible error in giving the instruction quoted, although it was subject to critiism in the particular mentioned.

10. We perceive no error in charging the jury that "insanity means such a perverted and deranged condition of the mental and moral faculties as to render a person incapable of distinguishing between right and wrong, or not conscious at the time of the nature of the act which he is committing; and where, though conscious of it, and able to distinguish between right and wrong, and knowing that the act is wrong, yet his will—by which is meant the governing power of his mind—has been, otherwise than voluntarily, so completely destroyed that his actions are not subject to it, but are beyond his control." Such ruling has been expressly sanctioned by this court. Butler v. State, 102 Wis. 364, 366, 367, 78 N. W. 590; Eckert v. State, 114 Wis. 160, 163, 164, 89 N. W. 826. Nor do we think there was any error in charging the jury to the effect that we are not to infer that a man is insane from the mere fact of his committing a crime, or from the enormity of the crime, or the absence of adequate motive. Nor was there any error in charging the jury that: "Moral or emotional insanity does not exempt a person from criminal responsibility. Mere moral insanity, or temporary frenzy or passion, arising from excitement or anger, and not from any mental disease, is not an excuse for crime."

11. After defining insanity, as mentioned, the court read to the jury lengthy extracts from the opinion of Mr. Justice Lyon in the Chafin Will Case, 32 Wis. 560–563. It is unnecessary to repeat what is there said. As there indicated, Bradley Chafin had many peculiarities, and entertained many op which were generally deemed absurd extravagant, and his conduct in son spects was eccentric and foolish. Th tion was equitable in its nature, an court held that the verdict in the trial to the effect that Bradley Chafin was i was "clearly contrary to the weight evidence." Chafin Will Case, 32 Wis True, such extracts from the opinion i case were so given as illustrations of a man might do and still be sane, bu were given to the jury by the trial co the opinion and judgment of this cour hence would naturally have a controlli fluence with the jury. They were sta principles to be followed by the jury. yet the two cases are so broadly distin able in their facts as to make such ex inapplicable to this case, and hence m ing to the jury. We must hold th reading of such extracts to the jur error.

12. Error is assigned because the co fused to give each of the four instru requested. But they are all substa covered by the charge. There seems no other question of sufficient impo to call for consideration.

For the errors mentioned, the judgm the circuit court is reversed, and the is remanded for a new trial upon both issues. The warden of the state priso surrender the plaintiff in error to the iff of Clark county, who will hold h custody until he shall be discharged, custody changed by due course of law

---

O'BRIEN v. WISCONSIN CENT. RY

(Supreme Court of Wisconsin. Sept. 8,

RAILROADS—INJURIES AT CROSSINGS—
DREN—GATES—SPEED—CONTRIBUTORY
LIGENCE OF PARENTS—QUESTION FOR

1. Where, in an action for death at road crossing, the engineer was on the on his side of the train all the time a approached the crossing, but by reason curve at that point could not see pla intestate, the mere fact that the firem pursuance of his duties, got down from b of the engine to the deck, where he co look ahead, did not constitute negligence part of the company.

2. Rev. St. 1898, § 1809, declares t train or locomotive shall go faster than si per hour in any city or village until it ha ed all the traveled streets thereof. 1809a provides that railways were there lieved from slowing down trains in citi villages to six miles an hour, on conditio some adequate security should be afford to exceed a speed of 15 miles per hou provided that gates should first be plac maintained on such street crossings withi and incorporated villages over which passed as the public authorities thereof direct. *Held*, that such statutes should b strued together, and required a railroad ing through an incorporated city to oper trains over street crossings where no gat been erected at not to exceed six mil hour.

Digitized by Google

3. A child 25 months of age is not chargeable with contributory negligence.

4. Plaintiff, after eating his supper, went into his back yard to prepare some wood, and was followed by his son, 25 months of age. While plaintiff was engaged in splitting the wood, the child left, went to the front of the house, through the front gate, and out onto the sidewalk, and thence a short distance across defendant's railway track. The child thereupon turned, and started to return. Plaintiff, on discovering that the child was gone, dropped the wood, and ran after him, but the child was struck by a train before plaintiff could get to him. *Held*, that whether plaintiff was guilty of contributory negligence in not taking proper care of the child was a question for the jury.

Appeal from Circuit Court, Ashland County; John K. Parish, Judge.

Action by William O'Brien, as administrator of the estate of John O'Brien, deceased, against the Wisconsin Central Railway Company. From a judgment in favor of defendant, plaintiff appeals. Reversed.

This action is to recover damages for the alleged negligent killing of the plaintiff's infant son June 18, 1901, at a street crossing in the city of Ashland. Issue being joined and trial had, the court at the close of the testimony directed a verdict in favor of the defendant, and from the judgment entered thereon the plaintiff brings this appeal. The negligence alleged is the excessive speed of the train, and the failure to keep a lookout in the direction in which the train was going at the time. It appears, and is undisputed, that the defendant's passenger depot is within the city limits; that the defendant's line of railway from that city to Chicago at first runs directly east for seven blocks to Sixth Avenue East; that just before crossing that avenue it begins to turn to the southeast, and continues to do so until after crossing Seventh Avenue East; that on the evening in question the defendant's regular passenger train for Chicago left the depot at 7:25 p. m., and when it reached Seventh Avenue East it ran over the child, and injured it, so that it died the next morning. There is evidence tending to prove that the plaintiff was a laboring man, 39 years of age; that he lived with his family, consisting of his wife and three children, on the west side of Seventh Avenue East, and in the second house immediately south of the railway track; that he came home from his work at half past 6 o'clock; that after he had his supper, he went back of the house to an alley, 150 feet from his front gate, to prepare some wood, and little Johnny, then 25 months of age, went with him; that while the plaintiff was engaged in splitting wood, Johnny left his father, and went to the front of the house, through the front gate, out upon the avenue sidewalk, thence north on the sidewalk across the defendant's railway track to a point some distance north of the track, when he turned around, and went back south along the same sidewalk, and that as he was attempting to cross the railway track, he was struck by the train, and so injured that he died the next morning; that when the plaintiff was in the act of carrying an armful of wood into the kitchen, he missed the child, and so dropped his wood, and looked in front, and saw the child, then 20 to 25 feet north of the track, running along the sidewalk toward the track, and he immediately started on the run for the child with all his speed, but the train got to the child first; that when he first discovered the child, he was 140 feet from him on the line he went, and that the train at that instant was 225 feet from the child. It is practically undisputed that the engineer kept a lookout on his side of the train all the time as it approached Seventh Avenue East, and could see the track and south of it, but could not see north of the track by reason of the curve in the track; that just before reaching Sixth Avenue East, the fireman, whose place was on the north side of the cab, got down on the deck, and pulled the door open, and reached over with his left hand for the injector, to keep the engine from blowing off, and so could not see the track as the train approached Seventh Avenue East; that the roundhouse foreman, who happened to be riding in the cab to his place of business, about a mile from the depot, and when the engine was about at the alley mentioned, looked through the front cab door, and saw the little child 30 to 35 feet north of the center of the track, walking north on the sidewalk, away from the track; that he then turned around to speak to the engineer, who failed to hear him, when he again looked ahead, and saw the child, then about 15 or 20 feet from the track, running toward it; that he immediately called to the engineer, who turned his head in through the window, set the brake, and reversed the engine just as soon as he possibly could, and the train was stopped as soon as possible; that the automatic air bell was ringing all the time.

Dufur & Alvord, for appellant. Howard Morris and Thos. H. Gill, for respondent.

CASSODAY, C. J. (after stating the facts). We cannot say that there was any error in refusing to submit to the jury the question whether the defendant was negligent in failing to keep a lookout in the direction in which the train was going at the time. The facts are given in the foregoing statement. The engineer was on the lookout on his side of the train all the time as they approached Seventh avenue. The mere fact that the fireman, in pursuance of the requirements of his duties, just before reaching that avenue, got down on the deck, where he could not look ahead, cannot be regarded as negligence, under the circumstances stated.

2. But there is evidence tending to prove that the train was at the time going at the

¶ 1. See Negligence, vol. 37, Cent. Dig. § 124.

Digitized by Google

rate of more than six miles per hour. The statute declares, in effect, that "no train or locomotive shall go faster" in any city or village "than at the rate of six miles per hour," until it has "passed all the traveled streets thereof." Section 1809, Rev. St. 1898. But counsel for the defendant contend that the next section of the statute makes an exception to the general rule, and permits a speed of 15 miles an hour, and only requires gates to "be placed and maintained upon such street crossings" when directed by the city or village authorities (section 1809a, Rev. St. 1898); in other words, that the statute authorized a speed of 15 miles an hour without gates, but simply required railway companies to construct gates when directed to do so by the city or village. In support of such contention, counsel seem to rely upon Nolan v. M. L. S. & W. Ry. Co., 91 Wis. 16, 22, 23, 64 N. W. 319. It was there held that the statute had no application to unincorporated villages, but it was there said, in effect, by our late Brother Pinney, that the two statutes must be construed together; that the act from which the last section was taken is entitled "An act to limit the rate of speed of railroad trains and locomotives in incorporated villages and cities" (Laws 1891, p. 676, c. 467); that railway corporations were thereby relieved from slowing down all trains in cities and villages to six miles an hour, "on condition that some adequate security should be afforded in the case of an increased rate of speed to fifteen miles an hour, and to that end it was provided," among other things, in the language of the statute, "that gates shall first be placed and maintained upon such street crossings within cities and incorporated villages over which trains shall pass, as the public authorities of any such city or village may direct." Certainly, the opinion of Mr. Justice Pinney does not bear the construction placed upon it by counsel. But it is unnecessary to discuss the question as to the meaning of the sections of the statutes cited, since it is fully covered by the opinion of Mr. Justice Dodge in the recent case of Schroeder v. Wisconsin Cent. Ry. Co., 93 N. W. 837, 840, 841. It was there expressly "held that the two statutes should be construed together, and required a railroad passing through an incorporated city to operate its trains over street crossings at not to exceed six miles per hour where no gates had been erected, as authorized by the latter section." The evidence was certainly sufficient to take the case to the jury on the question whether the train was at the time running at an unlawful rate of speed. For the purpose of this appeal, we must assume that it was running at an unlawful rate of speed.

3. This being so, we cannot say, as a matter of law, that such unlawful rate of speed was not the proximate cause of the injury and death of the child. Of course, a child of such tender years is not chargeable with contributory negligence. If it is claimed that the parents were, that would, at least, be a question for the jury. Hoppe v. C. M. & St. P. Ry. Co., 61 Wis. 357, 21 N. W. 227; Hooker v. C. M. & St. P. Ry. Co., 76 Wis. 542, 44 N. W. 1085. The liability of a railway train running over pedestrians, and especially children, in cities and villages, is, of course, much greater than in the country. The object of the statutes so limiting the rate of the speed of trains in cities and villages was to prevent such injuries. The question of proximate cause was properly for the jury, under appropriate instructions from the court.

The judgment of the circuit court is reversed, and the cause is remanded for a new trial.

SIEBECKER, J., took no part.

FISCHBECK v. MIELENZ.

(Supreme Court of Wisconsin. Sept. 8, 1903.)

JUDGMENTS — PAYMENT — ASSIGNMENT — INSOLVENCY—CLAIMS — REFERENCE — DISMISSAL—RES JUDICATA—TRIAL—FINDINGS — APPEAL—REMAND.

1. Where, on an issue as to whether certain judgments against an insolvent had been paid, the court found that a bank, the owner of such judgments, had realized from the sale of certain personalty in the ordinary course of trade a sum "nearly equal to the bank's demand," and that there still remained on hand and undisposed of "considerable material," as well as machinery, tools, vats, etc., but failed to find just how much of the bank's demand remained unpaid, or the value of the property undisposed of, but found that the judgments had been satisfied, and it was impossible to tell from the record the amount due on a fair accounting when the property was transferred by the bank to defendant, the case would be remanded for further trial.

2. Where a judgment creditor, prior to the assignment of the judgments, had received from property purchased on execution under the judgments an amount nearly sufficient to pay the same, and had agreed to transfer all the property so received over and above that necessary to satisfy its indebtedness, a subsequent assignee of the judgments and transferee of the property was accountable for the amount paid on the same, and only acquired the judgment creditor's interest in the judgments and property as of the date of the transfer.

3. A bank recovered certain judgments against a debtor, and acquired certain personal property on execution thereunder, from which a large part of the judgments was paid. Thereafter the judgment debtor made an assignment, and the bank filed its claim with the assignee. The claim on a reference was allowed, but the court, on objection, disallowed the referee's report, and directed a further reference, whereupon the bank withdrew its claim, which was dismissed, with costs. *Held*, that such dismissal was not on the merits, and was, therefore, not res judicata of the validity of the bank's claim.

Appeal from Circuit Court, Milwaukee County; Lawrence W. Halsey, Judge.

Action by Anna Hottelet against F. W. Von Cotzhausen and others. Defendant Albert E. Mielenz filed cross-complaint against defend-

¶ 2. See Judgment, vol. 30, Cent. Dig. §§ 1548, 1552.

ant Olga Fischbeck. From the judgment rendered defendant Mielenz appeals. Reversed.

This is an action for the partition of the premises described, of which Fred Roth owned the undivided one-fourth interest from April 30, 1895, to August 28, 1896. The controversy here is between Mielenz, to whom five of the judgments hereinafter mentioned were assigned by the bank, as hereinafter stated, and who filed a cross-complaint against the defendant Fischbeck, who has become the owner of Roth's one-fourth interest in the land in question. It appears from the record, and, among other things, is found, in effect, by the court: That on the day and year last mentioned the Marshall & Ilisley Bank entered by confession six several judgments against Fred Roth in the aggregate amount of more than $12,000, and each of them was duly docketed on that day. That executions were immediately issued thereon, and levied on all and singular the visible and tangible personal property of Fred Roth, including a large stock of machinery, tools, tubs, vats, merchandise, and materials used in the pickle and vinegar factory. That the property so levied upon was bid in on the execution sale by the bank for $3,000. After the confession and docketing of said judgments, and on August 28, 1896, Fred Roth made a voluntary assignment for the benefit of his creditors of all of his property, including the land in question, to one Phillip G. Hinners, who, as such assignee, duly sold and conveyed the land in question to August Richter, Jr., April 3, 1897, and that sale and conveyance was duly confirmed by the court May 11, 1897, and subsequently Richter sold and conveyed the land in question to the defendant Olga Fischbeck. When the bank bid in the personal property on execution sale, as mentioned, it engaged the services and special skill of Fred Roth to cure, finish, and market the merchandise and stock on hand, a large portion whereof was then still in process of manufacturing or ripening, and that it agreed to pay Roth for such service in cash $100 per month, and to turn over to him or his order all the surplus, after realizing the amount of the bank's claim or investment, with interest and such costs or expenses as it might incur. That Roth acted upon this undertaking, and gave his personal service and attention to finishing and marketing the product. That by June 28, 1897, there had been realized from the sale of such personal property in the ordinary course of trade a sum nearly equal to the bank's demand, while considerable material, as well as machinery, tools, vats, etc., still remained on hand and undisposed of; and that then and there, in consideration of the payment of $400, the bank turned over the rest, residue, and remainder of all property bid in at the execution sale to the defendant Mielenz, agreeing to assign to him upon demand the several judgments against Fred Roth, which then stood of record still uncanceled. That Mielenz was a relative of Roth, and acted in said transaction not for himself, but for the benefit of Fred Roth, and, after Roth's death later on, for the benefit of Roth's family. That the bank did assign all its right, title, and interest in and to five of said judgments to Mielenz July 10, 1900, reciting therein a consideration of $1, but gave to Mielenz a receipt therefor, of even date, for $400. December 9, 1896, the bank, acting under the instructions of Mielenz, presented and filed its claim in the matter of the assignment of Roth for the benefit of his creditors, asking to participate in the distribution of a dividend then about to be declared to the extent of the unpaid balance then appearing to be still due on its several judgments, and which the bank then claimed to amount in the aggregate to $9,349.66 and interest. That the assignee, Hinners, objected to such claim on the ground, among others, that under the arrangement mentioned said judgments had been paid in full; and that there was nothing any longer due from Fred Roth to the bank. That the issue thus raised was referred for trial, and a great deal of testimony taken, upon which the referee decided in favor of the bank, holding it to be entitled to participate to the extent of its judgment claims. That upon the hearing of the referee's report before the circuit court the bank moved for a confirmation of the findings of the referee, and Hinners moved to set aside the same. That the court thereupon refused to confirm such report, and ordered a re-reference, and further testimony to be taken, for the purpose of taking proofs as to what disposition had been made by the bank of the property which was bid in and purchased upon execution sale, the manner of such disposition, and the sums or amounts realized therefor either in cash or outstanding accounts, and that such re-reference be, and thereby was, confirmed solely as to the particulars above mentioned. That pending such proceedings the bank withdrew its claim, and thereupon, and on November 6, 1898, the court entered its order and judgment that the claim of the bank filed therein be, and the same was thereby, withdrawn, and all proceedings had thereon on the part of the bank be, and they thereby were, dismissed, with costs in favor of Hinners, to be taxed by the clerk of the court, and that no further proceedings were ever had to enforce said judgment claims.

Upon such facts the court found as conclusions of law that from and after June 28, 1897, there was nothing any longer due and owing upon said several judgments from Fred Roth by reason of the dealings between the bank and the judgment debtor; that Mielenz, in procuring an assignment of such judgments was a naked trustee for Roth and his family, and that the same ought to be released and canceled of record, because not any longer constituting either a legal or equitable lien

Digitized by Google

upon the one-fourth undivided interest in the premises described, and now owned by the defendant Fischbeck. It was further found by the court that the bank held as collateral security for the indebtedness covered by such judgments a second mortgage on lands in the Second and Fourth Wards of Milwaukee, the value of which was greatly in excess of the aggregate indebtedness secured by both of such mortgages; that August 15, 1896, the bank allowed the land known as the "vinegar factory property," in the Fourth Ward, to be sold on such first mortgage for much less than it was intrinsically worth, without the slightest effort on the part of the bank to bid in the same or to compete as a subsequent incumbrancer at the sale thereof; and that August 31, 1897, the bank, without any consideration, and upon the mere request of Mielenz, acknowledged part satisfaction and release of record of its second mortgage from the Roth homestead, to enable the owners thereof to sell the same. Upon such findings the court, among other things, adjudged that the defendant Albert E. Mielenz had no claim or lien, legal or equitable, upon the undivided one-fourth interest belonging to the defendant Fischbeck, and that his cross-complaint in that behalf ought to be dismissed, with costs in her favor. From such judgment the defendant Mielenz brings this appeal.

Wheeler & Perry, for appellant. Sylvester, Scheiber & Orth, for respondent.

CASSODAY, C. J. (after stating the facts). It is conceded that the five judgments against Roth and in favor of the bank became liens upon Roth's quarter interest in the land in question August 28, 1896. The important question is whether those judgments were fully paid by the agreements and dealings between the bank and Roth and the bank and Mielenz, who acted, not for himself, but for the benefit of Roth during his life, and after his death for the benefit of Roth's family, in respect to Roth's property and services and the judgments. The agreement with Roth, as found by the court, was that, after the bank should realize the amount of its claim or investment, with interest, costs and expenses, "all the surplus" or balance of the property should be turned over to Roth or his order. The court found that as early as June 28, 1897, the bank had "realized from the sale of such personalty, in the ordinary course of trade, a sum nearly equal to the bank's demand," while there "still remained on hand and undisposed of" a "considerable material, as well as machinery, tools, vats, etc." But the court fails to find just how much of the bank's demand so remained unpaid at that time, or the value of the property then remaining on hand and undisposed of. Under such circumstances the bank, on the day and year last mentioned, turned over to Mielenz all th residue, and remainder of the persona erty it had bid in at execution sale, a agreed "to assign to him upon dema several judgments" mentioned, in con tion of $400 then paid by Mielenz bank. Of course, the property recei him at the time must have been regar of equal value, at least, to the $400 s The vice president of the bank, wh ducted the principal negotiations wit testified to the effect that all the bank ed was to get enough out of the prop pay Roth's indebtedness to the bank if there was anything lett, the ban willing to turn it over to Roth, or to a he might name; that the bank did no to satisfy any judgment, but simply that, if the bank should get enough its debt against Roth, whatever the left Roth could have for himself, his his friends; that the bank "agreed to the debt simply." He also testified, section 4096, to the effect that the b ceived out of the property so taken cution $11,492.93 net, and that that balance of principal due of $507.07, a to that sum should be added $502.51 and certain expenses. It is obviou the evidence, as well as the findings court, that the bank made the agre and acted as mentioned in good fai for the purpose of allowing Roth a family to have the benefit of all sales property and all the property over an what was necessary to satisfy its in ness against Roth. The bank only c and Mielenz, as the assignee of the is only entitled to recover, what ha realized or received from the proper and above such indebtedness to the It is impossible to tell from the reco the amount due the bank, upon a counting, at the time the property transferred to Mielenz; and the cour no finding on the question, except as The trial court is the appropriate pl the determination of such question result is that there must be further t findings of the court on that question. v. Griswold, 109 Wis. 275, 280, 85 N. Bostwick v. M. L. I. Co. of N. Y. (V N. W. 246, 259; Kinn v. First Nations of Mineral Point (not yet officially re 95 N. W. 969.

2. In view of the findings and e mentioned and what has been said hardly necessary to say that the con to the effect that by the transfer and ment mentioned the indebtedness secu the judgments, and which had been so paid and satisfied, was thereby reviv made enforceable for the full amo $12,000 and interest, less the $3,000 the bank bid in the property for at t cution sale, is without foundation. B transfers and assignment Mielenz was

Digitized by Google

in the position of the bank, and accountable accordingly; but he thereby occupied no better position and secured no superior rights. It is elementary that "the assignee of a chose in action succeeds to all the rights of the assignor, and these rights, whether legal or equitable, will be recognized and protected by courts of law against all persons having notice of the assignment." 2 Am. & Eng. Ency. Law (2d Ed.) 1088. This court has repeatedly held that the assignee of a judgment or chose in action takes it subject to all the equities between the parties. Blakesley v. Johnson, 13 Wis. 530; Rockwell v. Daniels, 4 Wis. 432.

3. It is claimed on the part of Fischbeck that the presentation of the claim secured by the judgments in the assignment proceedings, the favorable report thereon by the referee, the refusal of the court to confirm such report, and the re-reference thereof, and the withdrawal of such claim pending such proceedings, and the entry of an order and judgment therein to the effect that such claim was thereby withdrawn and all proceedings had thereon on the part of the bank be and were thereby dismissed, with costs, should be regarded as res adjudicata against the bank and Mielenz, as its assignee. Such is not the law. It will be observed that the merits of the claim were not passed upon; much less determined. In such determination a jury trial was, in the discretion of the court, permissible. No "final hearing" or order was ever made thereon. Section 1699, Rev. St. 1898. The withdrawal of the claim simply prevented participation in the estate assigned. Section 1700, Rev. St. 1898. While the administration of insolvent estates are to a certain extent governed by equitable principles, yet the mere allowance or disallowance of a claim is in the nature of a legal action. In re Assignment of Sherry, 101 Wis. 11, 16, 17, 76 N. W. 611; National Bank v. Herman, 114 Wis. 582, 91 N. W. 112. The withdrawal of such claim is in the nature of a voluntary nonsuit. Thus it has been held that a judgment is not res adjudicata as to defendants against whom the action was discontinued before verdict. Newell v. Smith, 38 Wis. 39. See, also, Morse v. Stockman, 65 Wis. 36, 26 N. W. 176. Nor where a judgment of dismissal is entered upon a mere stipulation to dismiss. Bishop v. McGillis, 82 Wis. 120, 51 N. W. 1075. Even in equitable actions, where the dismissal is not upon the merits, it does not operate as a bar. Spear v. Door County, 65 Wis. 298, 27 N. W. 60; Richards v. Allis, 82 Wis. 509, 52 N. W. 593. We must hold that the withdrawal of the claim and the action of the court thereon was not res adjudicata.

The judgment of the circuit court is reversed, and the cause is remanded for further trial and findings as mentioned in this opinion, and for further proceedings according to law.

PYM v. PYM.

(Supreme Court of Wisconsin. Sept. 8, 1903.)

EXECUTORS—CLAIMS—EVIDENCE — DECLARATION OF DECEASED PERSONS—RESIDUARY LEGATEE—BOND TO PAY DEBTS AND LEGACIES — CHARGE — HOMESTEAD — ACTIONS — LIMITATIONS.

1. Where an executrix and residuary legatee gave a bond conditioned to pay all debts and legacies of the testator, under Rev. St. 1898, § 3795, providing that in such case he shall not be required to return an inventory, the giving of such bond did not relieve testator's property from liability for debts, and render the executrix only personally liable, but a creditor of the estate was entitled, notwithstanding the giving of such bond, to sue to enforce an equitable lien on testator's realty for the payment of his claim.

2. Rev. St. 1898, § 2983, provides that a debtor's village homestead, not exceeding one-fourth of an acre, shall be exempt, and section 3862 provides that, if a testator shall make a provision in his will for the payment of his debts, they shall be paid, but that no general directions to pay debts shall subject the homestead to the payment thereof. *Held*, that a will devising to testator's widow all of his real and personal property "which should remain after payment of" his "just debts and funeral expenses," was only sufficient to authorize the payment of debts out of the real estate in excess of the one-fourth acre owned and occupied by deceased and his wife as their homestead at the time of his death.

3. In an action by testator's son against testator's widow, who was the residuary legatee, to recover an alleged indebtedness of decedent to plaintiff, evidence that testator told defendant that plaintiff had taken a sum of money belonging to testator, and deposited it in plaintiff's name in a certain bank, contrary to testator's protest, was inadmissible.

4. In an action by testator's son, to recover money alleged to have been advanced to his father in his lifetime, against testator's widow, the fact that prior to testator's death plaintiff was sued by him to recover money alleged to have been converted by plaintiff, and that he settled such suit, was admissible as an admission.

5. Such evidence was not conclusive as to the father's claim relative to the funds alleged to have been converted as alleged in his complaint in such suit, and of the fact that plaintiff acquiesced therein.

6. Where the widow and residuary legatee under her husband's will filed a bond to pay debts and legacies, as authorized by Rev. St. 1898, § 3795, and thereby became personally liable to pay testator's debts, an action by a creditor to recover an alleged debt from her did not accrue until after the giving of such bond, and was not barred until the expiration of six years thereafter.

Appeal from Circuit Court, Brown County; Sam'l D. Hastings, Judge.

Action by George Pym against Mary E. Pym. From a judgment in favor of defendant, plaintiff appeals. Reversed.

This action was commenced May 15, 1900, to recover $524.16, alleged to have been loaned and advanced to the defendant's testate, William Pym, who died March 21, 1894. The complaint alleges, in effect, that William Pym became indebted to the plaintiff on an account for moneys loaned and advanced to him during his lifetime, upon his request, to the amount stated, upon the express understanding and agreement that if, for any

reason, said William Pym was unable to repay the several sums so advanced, he would devise and bequeath his two lots therein described to the plaintiff as payment therefor; that the money was demanded of William Pym and the defendant, but was never repaid; that William Pym died March 21, 1894, without devising said lots to the plaintiff; that he left a will, in which he named the defendant as executrix and residuary legatee, and by the will be devised all of his property to the defendant, subject to the payment of his debts, funeral expenses, and bequests; that May 3, 1894, the defendant gave the usual statutory bond as such executrix and residuary legatee, as required by section 3795, Rev. St. 1898, and all the property of the deceased was assigned to her by the county court; that the real estate so assigned consisted of the two lots described; that the defendant has no other property than the two lots mentioned. Wherefore the plaintiff prayed judgment for the sum stated, together with costs, and that the judgment be declared a lien upon the lots mentioned. The answer consists of admissions, denials, and counter allegations to the effect that the lots and the building thereon constituted the homestead of William Pym and the defendant, and have been actually selected and occupied and claimed by her as such ever since the will took effect May 2, 1894, and that during all of that time the defendant has resided thereon, and still resides thereon; that, if the plaintiff loaned and advanced moneys to William Pym, the same were taken out of the moneys and property which belonged to William Pym or his estate. And for a separate defense the answer alleges that the rights of the plaintiff, if any, have been barred by the statutes of limitation. At the close of the trial the court made findings of fact to the effect that the plaintiff was the son of William Pym, and the defendant was the wife of William Pym; that William Pym died, and left a will dated January 15, 1891, and which was admitted to probate May 1, 1894, as stated, in which he left $1 to the plaintiff, $1 to another son, and made the defendant sole executrix, legatee, and devisee; that the whole estate was assigned to the defendant upon her giving a bond of $100 to pay debts and legacies, which she gave; that the items of money mentioned in the complaint were paid by the plaintiff out of the moneys and property which belonged to William Pym or his estate, and made at or about the times mentioned in the complaint; that the plaintiff has not proven that he had a valid claim against William Pym at the time of his decease, or against his estate at any time. And as conclusions of law the court found, in effect, that the plaintiff's complaint must be dismissed, and that the defendant is entitled to judgment dismissing the complaint, and for her costs and expenses in the action, and ordered judgment to be entered accordingly. From the judgment so entered the plaintiff brings this appeal.

Sheridan & Evans, for appellant. Ellis, Merrill & Silverwood, for respondent.

CASSODAY, C. J. (after stating the facts). At the commencement of the trial the defendant objected to any evidence under the complaint, because it did not appear therefrom that the plaintiff had not a full and complete remedy by proceedings in the county court, and hence that a court of equity should decline to take jurisdiction. This objection was manifestly based upon the rulings of this court in Meyer v. Garthwaite, 92 Wis. 571, 573, 576, 66 N. W. 704; Burnham v. Norton, 100 Wis. 8, 13, 75 N. W. 304; Hill v. True, 104 Wis. 294, 301, 80 N. W. 462; Ludington v. Patton, 111 Wis. 208, 249, 86 N. W. 571. The complaint alleges, and the proofs show, that the defendant, as executrix and residuary legatee, had given the bond required by section 3795, Rev. St. 1898, conditioned "to pay all the debts and legacies of the testator." This being so, the trial court held, in pursuance of a decision of this court, that the effect of giving such bond was to pass to the defendant "the absolute title to the whole estate, and to terminate the administration," and that "claims against the estate became, by the execution of the bond, claims against such sole legatee, and the remedy of general creditors of the estate was thereafter upon the bond or against the legatee, and not against the estate." Will of Ebenezer W. Cole, 52 Wis. 591, 592, 9 N. W. 664. And see Meyer v. Garthwaite, 92 Wis. 575, 66 N. W. 704. In the first of these cases it is said that such "is the doctrine of the Massachusetts cases" arising under a statute like ours; citing Thompson v. Brown, 16 Mass. 172; Clarke v. Tufts, 5 Pick. 337. Neither of those cases goes to the extent stated. Thus, in a recent case in that state it is held that: "It is no defense to an action under the" statute "against an administrator de bonis non with the will annexed that the original executor, who was also the residuary legatee, gave a bond to pay debts and legacies." Collins v. Collins, 140 Mass. 502, 5 N. E. 632. It is there said by the court that: "It is true that the bond made the executrix personally liable upon it to the extent of its penalty, but that is not sufficient to exonerate the estate, unless the statutes provide that it shall have that effect. We find no such provision. * * * The purpose of the section was to confirm the doctrine of Gore v. Brazier, 3 Mass. 523, 543 [3 Am. Dec. 182], to the effect that 'the lien on the testator's estate, real or personal, * * * remains in full force, and the benefit to be derived by a creditor or legatee from the bond is merely cumulative.'" Page 505, 140 Mass., and page 633, 5 N. E. And then, after citing Thompson v. Brown and Clarke v. Tufts,

Digitized by Google

supra, to the exception therein mentioned, it is said: "But this exception is shown to be consistent with the principle quoted from Gore v. Brazier by the fact that it also is adopted by the statute. And that principle is so fully recognized by the later decisions that it is only necessary to cite them." Citing numerous cases. Page 506, 140 Mass., and page 633, 5 N. E. To the same effect: Jenkins v. Wood, 144 Mass. 238, 10 N. E. 818. So it has been held in Michigan, that: "The statutes declaring that all of a testator's property shall be chargeable with the payment of all of his debts create an equitable lien in favor of creditors, which is not destroyed by the execution of the statutory bond by a residuary legatee, which becomes an additional security for such payment." Lafferty v. People's Savings Bank, 76 Mich. 35, 43 N. W. 34. See, also, Blackmore v. Perkins, 95 Mich. 446, 54 N. W. 945. In a later case in that state it has been held, in effect, that the "right of disposition of the property" of the estate by an executor and residuary legatee in the will, who has given such bond, "is subject to the authority of the probate court to compel the application of the property to the payment, ratably, of the decedent's debts, in case the executor fails to provide for them from other sources. Therefore it is improper, where there is a deficiency of assets, for such an executor to mortgage" or dispose of the property "in such a manner as to work preferences among the creditors." In re Vedder's Estate, 122 Mich. 439, 81 N. W. 356. The defendant in the case at bar, having given the bond, as required by section 3795, Rev. St. 1898, was thereby relieved from making or returning an inventory of the estate; but this court has held, in harmony with the cases cited, "that the mere ordering, receiving and approving the bond" did not ipso facto vest "the title to the whole estate, both real and personal, in the executrix absolutely and irrevocably." Jones v. Roberts, 84 Wis. 465, 470, 54 N. W. 917, 918. "It is only when, by the terms of the will, the executor is such sole or residuary legatee, and the same is judicially determined upon due notice and opportunity for hearing, that such transfer becomes complete in law." Id. Upon the death of a person his property not exempt at once becomes "chargeable * * * with the payment of all his * * * debts," whether he dies testate or intestate. Sections 2270, 2277, 2281, Rev. St. 1898. Union National Bank v. Hicks, 67 Wis. 191, 30 N. W. 235. The statute also expressly provides that "all the estate of the testator or intestate, real and personal, except the homestead of the deceased, and" certain personal property named in the statute, "shall be liable to be disposed of for the payment of his debts and the expenses of administering his estate." Section 3862, Rev. St. 1898. Thus, it appears from the statutes, as well as from the decisions in other states under similar statutes, that all property not exempt of which a testator dies seised is subject to the payment of his debts, whether the sole executor and residuary legatee gives the bond required by section 3795 or the bond required by the previous section. See, also, section 3940, Rev. St. 1898. Jones v. Roberts, 84 Wis. 471, 54 N. W. 917. In so far as the Cole Case held that the giving of the bond required by section 3795 had the effect "to pass to the executrix and sole legatee the absolute title to the whole estate, and to terminate the administration," and limit "the remedy of general creditors" to proceedings "upon the bond or against the legatee" personally, the same must be overruled.

2. The complaint alleges that by the will the testator devised to the defendant lots 71 and 72, Original Plat of Ft. Howard, "subject to the payment of debts, funeral expenses, and bequests" therein mentioned; and prays that the plaintiff's claim of $524.16 be adjudged a lien thereon. The answer alleges, in effect, that the whole of said lots, with the dwelling house on lot No. 71, and its appurtenances, except a strip of land on the northerly side of lot No. 72 of the width of 26.23 feet—being the excess over one-fourth of an acre in said lots, constitutes the homestead on which the testator resided at the time of making the will, and has actually been selected, occupied, and claimed by the defendant as her homestead ever since the will took effect, and that during all that time the defendant had resided thereon in such dwelling house, and still resides thereon. The will gave and devised to the defendant all his real and personal property which he should own at the time of his death and which should "remain after payment of" his "just debts and funeral expenses." A section of the statute cited provides, in effect, that, "if a testator shall make provision by his will * * * for the payment of his debts," etc., then "they shall be paid accordingly," but that "no general direction in any will to pay the debts of the testator out of his property shall subject the homestead to the payment thereof." Section 3862, Rev. St. 1898. There can be no question but what the quarter of an acre constituting the homestead is exempt. Section 2983, Id. But it is equally certain that the strip of land on the northerly side of lot 72, mentioned in the answer, was, by the will, charged with the payment of his debts. Merton v. O'Brien (Wis.) 94 N. W. 340, 341; Evans v. Foster, 80 Wis. 509, 50 N. W. 410, 14 L. R. A. 117. The case is broadly distinguishable in its facts from In re Will of Madden, 104 Wis. 61, 80 N. W. 100. Assuming that the plaintiff has a just claim against the estate of the testator, then we perceive no good reason why, upon the principle of the cases cited at the commencement of this opinion, the circuit court could not properly take jurisdiction and enforce payment of such claim out of the strip of land mentioned. Meyer v. Garthwaite

Digitized by Google

ham v. Norton, Hill v. True, and Ludington v. Patton, supra.

3. The $524.16 claimed by the plaintiff is alleged to be on account of moneys loaned and advanced to the testator, and in his behalf, and upon his request, as per statement made a part of the complaint, and under the express agreement therein stated. The statement of the moneys so loaned and advanced commences in March, 1888, and terminates in December, 1894. The answer alleges that, if any of the items mentioned in that statement were paid or incurred by the plaintiff, the same were paid out of moneys and property belonging to the testator or his estate. The court found that such payments were made by the plaintiff at or about the times mentioned in such statement, but that the plaintiff made such payments out of the moneys and property which belonged to the testator or his estate. The vital question litigated was whether the moneys so paid out were the property of the plaintiff or the property of the testator or his estate. A large portion of the evidence in support of such finding consists of the testimony of the defendant, taken against objection, to the effect that the testator told her that he had $1,100 when his wife died, which the plaintiff took; that the plaintiff gave back to the testator $300 of that sum, leaving $800 still in the hands of the plaintiff; that the plaintiff took the money in the fall before he was married, and put it into the Kellogg Bank in his own name; that the testator had always told her that the plaintiff had, without his consent, taken $700 or $800 from his possession in a place under the house where he kept it; that he always informed her and claimed that the plaintiff was owing him $700 or $800; that the plaintiff would not give the testator the privilege of using his own money. Such declarations of the testator were clearly inadmissible. The defendant derives her title to the estate from the testator. It is substantially the same as though the suit was against the testator himself. If the suit had been brought against him in his lifetime, no one would claim that he would have had the right to prove such self-serving declarations to his own wife. The mere fact that he has died since making the alleged declarations, and that his estate has passed to the defendant, does not make them admissible in her favor. Thus it is stated by a recent text-writer that: "The conduct, admissions, and declarations of a party in his own interest are no more competent as evidence for his estate after his death than for himself while living; and, if such statements were not made in the presence of the adverse party, they are inadmissible in a suit against the estate." 1 Jones on Evidence, § 236. So it has been held by this court that: "In an action by an administrator to prevent the enforcement of a judgment against his intestate, evidence of declarations of the debtor in his lifetime as to payment of the judgment is inadmissible." Jilsum v. Stebbins, 41 Wis. 235. See, also, Carlyle v. Plumer, 11 Wis. 96; Ward v. Ward, 37 Mich. 253; Doan v. Dow, 8 Ind. App. 324, 35 N. E. 709. But it is said that the plaintiff himself opened the door for the admission of such testimony. We fail to find that he gave any evidence of such declaration or communication from the testator to his wife. An exception to the rule stated is where the declarations made are against the interest of the party making them. 1 Greenl. Ev. §§ 147, 149; 1 Jones on Evidence, §§ 241, 243; Lehman v. Sherger, 68 Wis. 145, 31 N. W. 733; Pritchard v. Pritchard, 69 Wis. 373, 34 N. W. 506. The giving of evidence of such declarations by the testator did not authorize the admission of such self-serving declarations.

4. Exception is taken because the defendant was allowed to prove, in effect, that April 19, 1890, the plaintiff was sued by his father, and the Kellogg National Bank garnished to recover back $750 alleged to have been paid to and received by the plaintiff herein May 29, 1888, and that April 23, 1890, the plaintiff herein paid to his father $200, and that thereupon the suit and garnishee action were both discontinued, without costs to either party. The son had the right to compromise and settle that suit in the manner stated, even if he believed the claim to be entirely unfounded. The fact that he did so was admissible in evidence. But such settlement was not an admission on the part of the son that the facts alleged in his father's verified complaint were true. The extent of the son's admission was necessarily measured by what he said and did under the circumstances, and not by the complaint made by his father against him. And yet the trial court states, in effect, that such record evidence "conclusively established" not only contradicted "much of the parol testimony, but shows conclusively William Pym's claim relative to said funds, and the plaintiff's acquiescence in such claim." No such effect should be given to the compromise of that suit.

5. The defendant contends that the plaintiff's cause of action, if any, is barred by the six-year statute of limitations. It is true that the action was not commenced until more than six years after the testator's death. The contention is that the statutes began to run on each loan and advance immediately when made. Certainly such loans and advances did not constitute a mutual account. Butler v. Kirby, 53 Wis. 188, 10 N. W. 373; Fitzpatrick v. The Estate of Martin Phelan, 58 Wis. 250, 16 N. W. 606; Dunn v. Estate of Fleming, 73 Wis. 545, 41 N. W. 707. If the cause of action alleged consisted only in such loans and advances, then there would be force in the defendant's contention. But the cause of action alleged is the liability of the defendant as sole executrix and legatee under the will and the statutes by reason of her acceptance of the same and

Digitized by Google

giving the bond required by section 3795, Rev. St. 1898. The action is not on the bond. The bond is mentioned in the complaint merely to show the liability of the defendant and the land therein described. When did such cause of action accrue? The testator died March 21, 1894. The will was admitted to probate May 2, 1894. The bond was given by the defendant May 3, 1894. The record shows that the summons was served May 1, 1900, and that the defendant's attorneys served notice of retainer on the plaintiff's attorneys May 2, 1900. As virtually held in Merton v. O'Brien (Wis.) 94 N. W. 341, the defendant took the land described as her own, subject to the payment of debts and expenses charged thereon as stated. By accepting the devise and taking possession thereof under the will, she became personally liable to pay such charges thereon as they became due and payable. No cause of action accrued against the defendant until after the death of the testator. Such death, and the provisions of the statutes cited, and the will, and the probate thereof, and the action of the defendant thereunder, gave to the plaintiff, if he was a creditor of the testator, a cause of action against the defendant which he did not previously possess. We must hold that the cause of action alleged did not accrue more than six years prior to the commencement of this action. By reason of the findings and judgment having been based upon incompetent evidence, as mentioned, there must be further trial and findings as to whether the moneys alleged to have been paid by the plaintiff were in fact paid by him out of his own money or property or out of money or property belonging at the time to the testator or his estate. This is in harmony with the practice in such cases. Brown v. Griswold, 109 Wis. 275, 280, 85 N. W. 363; Bostwick v. M. L. I. Co. (Wis.) 92 N. W. 246, 259; Kinn v. First National Bank of Mineral Point (not yet officially reported) 95 N. W. 969; and Fischbeck v. Mielenz (decided herewith) 96 N. W. 426.

The judgment of the circuit court is reversed, and the cause is remanded for further trial and findings as mentioned in this opinion, and for further proceedings according to law.

ROBSON et al. v. PRICE et al.

(Supreme Court of Michigan. Sept. 15, 1903.)

PARTNERSHIP—ACTION AGAINST PARTNERS—TRIAL—FINDINGS—INCORPORATION OF CONTROVERTED FACTS.

1. Where, in an action against several persons as partners, there was contradicted evidence of facts and circumstances tending to show that they were partners, notwithstanding a written agreement, which on its face was not a contract of partnership, and the court found that they were not partners, it was not error for the court to fail to incorporate such facts and circumstances in its finding.

Error to Circuit Court, Eaton County; Clement Smith, Judge.

Action by John Robson and another against Fred Price and others. From a judgment in favor of defendant Price, plaintiffs bring error. Affirmed.

Cassius Alexander and J. M. C. Smith (Frank E. Robson, of counsel), for appellants. Clarke & Latting (Russell C. Ostrander, of counsel), for appellees.

HOOKER, C. J. The defendants in this cause were sued in attachment, upon the theory that they were copartners in the show business. The cause was appealed to the circuit court, and there tried by the court without a jury, and a judgment in favor of plaintiffs was rendered against defendants Robson and Granger, and against plaintiffs in favor of defendant Price, upon the ground that he was not a copartner. The plaintiffs have brought error upon the judgment. Plaintiffs' counsel proposed several amendments to the findings, and these were rejected.

The important points made in plaintiffs' brief are: (1) That the court erred in assuming that a writing between the copartners contained their entire and bona fide agreement, and that, when construed in the light of surrounding circumstances, it shows that Price was a copartner. (2) That the court erred in holding that it was not necessary to find the additional facts proposed, and that he should have included them in the finding, and that they would have established a copartnership had he done so.

The written agreement was as follows:

"Agreement of Contract.

"This agreement and contract entered into and made this 10th day of June, 1901, between Fred H. Price, sole owner of Susquehanna sleeping and dining car No. 12, now lettered 'Great London Shows,' ticket wagon, stringer wagon, two baggage wagons loaded with seats, lights, tents, poles, stakes, runs, wardrobe, etc., also lessee of one Venice 60-foot flat car, of the first part: I, Fred H. Price, agree to lease to D. J. Robson and L. E. Granger, of the second part, who agree to enter into the show business, and it is hereby agreed that said D. J. Robson and L. E. Granger are to organize, produce, and run the show, known as 'Robson & Granger Railroad Shows,' and to manage same, and Fred H. Price is to act as front door man, to protect his interests; and after deducting the legitimate expenses of running the show, Fred H. Price to receive 50 per cent. of the net profits daily or weekly, as he demands, and D. J. Robson and L. E. Granger to receive 25 per cent. each of the net profits, hire their own help, such as bandmen, actors, workingmen, etc., pay all salaries, transportation for cars, and all claims due for the above shows during the tenting season of 1901, and to turn the above two cars, w-

Digitized by Google

ons, and contents over to Fred H. Price, as they received them at Kingston Pa., after the tenting season of 1091.

"Fred H. Price.
"D. J. Robson.
"L. E. Granger.

"Witnesses:
"C. H. Edwards.
"C. M. Honeywell.
"Earl Van."

1. We cannot say that the court assumed that the writing contained the entire and bona fide agreement of the parties, and there is nothing to indicate that he did not construe this writing in the light of such circumstances as he found proved. Price's testimony contradicted the defendant's and there is reason to suppose that it was believed. If so, the writing was shown to contain the entire and bona fide agreement.

2. The court did not err in refusing to incorporate a list of the facts and circumstances suggested by the plaintiff in the finding. It is true that there was evidence tending to show that the defendants were copartners, notwithstanding the agreement, which upon its face was not an agreement for a copartnership. It was proper for the court to consider this testimony, as already said, and there is no reason to believe that he did not. But it was contradicted, and while some of the facts stated in the proposed amendments were not contradicted, others were. As to those that were contradicted, the question was for the trial court, not for us, and if all of the uncontradicted testimony had been incorporated in the finding, it would not justify us in saying that the court had erred in finding that Price was not a copartner. Hence the judgment should not be reversed upon this ground. In his rejection of the amendments, the court said that he had "considered the entire evidence, and from it concluded that Price was not a copartner, and that the original findings cover all that is necessary as to the facts sufficient for the disposition of the case."

Errors were assigned upon the admission of certain testimony. Apparently, counsel intended to abandon these, but we have examined them, and think that there is nothing in them calling for a reversal of the judgment. It is therefore affirmed.

The other Justices concurred.

OLIVIER v. HOUGHTON COUNTY ST. RY. CO.

(Supreme Court of Michigan. Sept. 15, 1903.)

INJURIES RESULTING IN DEATH—SURVIVAL FOR APPRECIABLE TIME—ACTIONS—NATURE AND FORM—DAMAGES—ELEMENTS.

1. Where a person injured by the wrongful act of another survived the injury for a moment, whether in a conscious or unconscious condition, the action accruing from such wrong was for injuries, under the act providing for the survival of actions for injuries, and not for wrongful death.

2. In an action for injuries which resulted in death, where the injured person survived the injury an appreciable length of time, his administrator was entitled to recover for the pain and anguish suffered between the time of injury and death, together with decedent's loss sustained by being deprived, by his injuries, of the ability to labor during the time he would probably have lived had he not been injured.

Error to Circuit Court, Houghton County: Albert T. Streeter, Judge.

Action by Charles O. Olivier, as administrator of the estate of Cyrille Boivin, deceased, against the Houghton County Street Railway Company. From a judgment in favor of plaintiff for alleged inadequate damages, he brings error. Reversed.

W. A. Burritt, for appellant. Gray, Haire & Stone, for appellee.

HOOKER, C. J. The plaintiff's intestate was injured while riding in a wagon through a collision with a street car. He was rendered unconscious, in which condition he remained until his death upon the succeeding day. The declaration contained four counts, two under what has been termed the "Death Act," and two under the "Survival Act." One of each charged "gross negligence." It was not claimed that the plaintiff was chargeable with contributory negligence. Upon the undisputed fact that deceased lived until the following day, the court held the death not instantaneous, and excluded testimony under the counts based on the death act, and subsequently counsel abandoned the count charging gross negligence under the survival act. A verdict and judgment for the plaintiff for four dollars was rendered, and the plaintiff has brought error.

The appellant's counsel raises two questions: (1) Whether he was entitled to recover under the death act. (2) Whether the court erred in his instructions upon the measure of damages.

We see no reason for splitting hairs as to what is meant by instantaneous death, though we can appreciate the difference between a continuing injury resulting in drowning, or death by hanging, throwing from a housetop, etc., and one where a person survives the wrongful act in an injured condition. There is no occasion for saying that one dies instantly because such survival is accompanied by a comatose condition, or unconsciousness, or insanity, or idiocy. The law draws no such distinction between the normal and abnormal, or the rational and irrational. Either has a right of action. In some cases the intervention of a next friend is necessary, but that makes no difference. See 8 Am. & Eng. Enc. of Law, 866, and see, also, Kellow v. Iowa Cent. Ry. Co., 68 Iowa, 470, 23 N. W. 740, 27 N. W. 466, 56 Am. Rep. 858, where it was held that survival of the

¶ 2. See Death, vol. 15, Cent. Dig. §§ 106, 108, 109.

Digitized by Google

injury for a moment is sufficient to permit the cause of action to vest and survive. This case is said to overrule the case of Sherman v. Western Stage Co., 24 Iowa, 515, cited in our case of Sweetland v. C. & G. T. R. Co., 117 Mich. 329, 75 N. W. 1066, 43 L. R. A. 568. We passed upon the question in the case of Dolson v. L. S. & M. S. R. R. (Mich.) 87 N. W. 629. This action survived, and under that decision no right of action under the death act accrued.

The court was of the opinion that the damages must be limited to the amount that deceased could have earned during the few hours that he lived after receiving the injury. It is but fair to state that this case was heard before the recent case of Keys v. Telephone Co. (Mich.) 93 N. W. 623, was decided. That case settled the rule for this state, which was indicated in the Dolson Case, that in estimating damages in such a case, it is proper to consider "the earning ability of the injured person, and the length of time that he would probably have lived had he not been injured, and the loss he sustained by reason of being deprived, by such injuries, of the ability to labor and earn money during the time he probably could have lived had he not been injured." Counsel for the defendant urge that the damages recoverable in such a case should be only (1) the injury to feelings, pain and anguish of deceased while he actually lived, and (2) the loss of earnings during the remainder of the time that he actually lived. This is an unreasonable limitation. We need not discuss the reasoning by which the result is reached. We have long ago held that prospective damages are recoverable. An injured person may recover for loss of earnings for the period during which the evidence fairly shows that he would have lived but for the injury. This rule would apply to one who should live long enough to try his case, though he should die the following day. But defendant's contention would substitute another rule upon a second trial, after his death, should such trial become necessary. Such recovery is based upon the actual damages suffered through the accident. On the first trial the recovery is based upon a probable prospective incapacity for a probable period. After death, such incapacity and consequent loss is made certain, where it was only probable before. The period alone remains uncertain. As to pain and mental suffering, it is different. Upon the first trial, the duration of such pain and suffering is uncertain; upon the second, it is definite. As has been already suggested, it is not a new doctrine that prospective damages, when reasonably certain, may be recovered. It is a part of the right that survives, under the act, as was held in the Keys Case. Such a construction removes the only objection that can be urged against the view which we have taken of the death act. It gives to the representatives the absolute right to the remedy which his ancestor had, instead of leaving it to depend upon the accident of his dependency.

The judgment is reversed, and a new trial ordered. The other Justices concurred.

STEVENS v. MICHIGAN SOAPWORKS.

(Supreme Court of Michigan. Sept. 15, 1903.)

MASTER AND SERVANT—ACTION FOR WAGES—ADDITIONAL COMPENSATION — WAIVER — QUESTION FOR JURY — APPEAL — VERDICT CONTRARY TO EVIDENCE—REVIEW.

1. A judgment will not be reversed on appeal where it is based on the unsupported testimony of the plaintiff against the corroborated testimony of the defendant on the ground that the verdict is against the weight of the evidence, unless the verdict is clearly against the overwhelming weight of the evidence.

2. Where, in an action for soap maker's wages, plaintiff testified that it was agreed that he should receive $25 per week if he was able to make over a certain lot of spoiled soap into a merchantable article, which he did, otherwise he should receive $20 per week, and it appeared that at various times when he was paid at the rate of $20 a week he objected to receiving the same in full, and, on being discharged, protested against receiving a check for $20 in full of his account, whereupon defendant's manager agreed to take up his claim for additional pay—whether plaintiff waived his right to receive such additional pay was a question for the jury.

Error to Circuit Court, Wayne County; William L. Carpenter, Judge.

Action by William J. Stevens against the Michigan Soapworks. From a judgment in favor of plaintiff, defendant brings error. Affirmed.

Russel & Campbell, for appellant. Delbert J. Hinkley, for appellee.

HOOKER, C. J. The defendant has brought error upon a judgment in favor of the plaintiff, based upon a claim for an unpaid balance for services rendered as a soap maker. The parties agree that plaintiff was hired by one Brown, at the time manager of defendant's business of soap making, and there is no dispute over the time that the plaintiff worked, or the amount paid to him. The controversy relates to the weekly wages agreed to be paid; the plaintiff claiming that it was to be $25, while defendant asserts that it was $20, which last amount he has been regularly paid. According to plaintiff's claim, he began work May 8, 1899, under an oral contract made with Brown in New York. He worked under Brown until the spring of 1901, when a Mr. Henry became connected with the soapworks. In July, 1901, Henry was chosen vice president and manager, and at the next pay day the plaintiff received the following letter from him, viz.:

"[Letter Head of Michigan Soap Works.]

"Detroit, Mich., July 20, /01.

"Mr. William J. Stevens—Dear Sir: At a meeting of the stockholders and directors of the new company, who have taken over the business of the old company, my position as Vice President and General Manager was

Digitized by Google

confirmed. I regret that we cannot longer give you employment, for reasons which need not be named here.

"We enclose you cheque covering the week, $20.00, although you have been absent five days through illness.

"Writer personally hopes that you will speedily get another position.

"Yours truly

"[Signed] Robert Henry."

This letter was handed to plaintiff in a sealed envelope, which also contained a check for $20, reading as follows:

"Detroit Mich., July 19, 1901.

"No. 4519.

"The Union National Bank.

"Pay to the order of W. J. Stevens twenty and no /100 dollars.

"Michigan Soap Works.

"C. W. Parsons Sec.

"In full to and including 7/20/01."

Plaintiff testified that, after reading the letter, he had an interview with Henry, in which he told him that he was entitled, under his contract, to $5 a week for the time he had worked, which had been withheld, and that Henry said "he did not doubt it at all whatever, but he said it was a new company, and they had nothing to do with the old company, and that he could not do anything about it until he saw Mr. Brown. He would have to see him first, and he would let me know, and told me to come in later." Plaintiff collected the check. He afterwards called twice, and was put off by the statement that Henry had not seen Brown yet, and on the last occasion he said "the matter had been put in his hands, and, if I wanted to settle, he would give me $40 to settle." Plaintiff refused to do that, and Henry said "I could take that or nothing; if I did not want to take that I wouldn't get a cent; I could do what I pleased." Plaintiff afterwards caused the records to be examined, and ascertained that Mr. Henry did not represent a new or different company, and that the capital stock of the old had only been increased. It was admitted upon the trial that there was no new company. The court directed the jury to determine whether the agreement was for $20 or $25 a week. Also the question whether the plaintiff had waived the $5 per week by his conduct, in case they should find the agreement was for $25. In this connection he said that, if he accepted $20 a week as his weekly pay, he could not recover; but if he insisted at different times that he was entitled to more, and there was an agreement to hold that question in abeyance, such acceptance would not be a waiver. He also instructed the jury that, if he accepted the last check without any statement to defendant of his claim, and cashed the check, it would preclude recovery; but if, on the other hand, the subject was discussed, and a reservation made of his right to assert his claim la acceptance and collection of the chec not preclude his asserting his clai testimony in the case shows that time of plaintiff's employment he v that the company had made a lot which had spoiled, and that defendar ed an assurance that he could ma the spoiled soap into a good arti plaintiff claimed that the defendar ed $20 a week, and that the partie agreed upon $25 a week upon condit plaintiff should demonstrate his al make over the spoiled soap. This h to have done later, after which h claim to $25 a week for the whole and the matter was postponed from time by Brown. The plaintiff was at all points by Brown and Henry, fendant's counsel claims that the all of the plaintiff's testimony ta gether is to show that he hired at t of $20 per week, and that an adva to be the subject of further agreem fore he would become entitled to said that his testimony contained fou ent versions of the conversations fro the contract resulted. We must adi there was testimony given by the that would have justified the jury i a contract for $20 a week, but, on t hand, it must be said that there w testimony indicating an agreement $25, if a test should show that could make over the spoiled soap int chantable article, which was demo soon after his employment was ente We cannot say that it was error to direct a verdict for the defendant agreement to pay $25 would be va the sum collectible upon performanc condition. The alleged errors assi defendant's brief are: (1) The re set aside the verdict as against the of evidence; (2) the refusal to set a verdict upon the ground that there evidence to support it; (3) the refus aside the verdict upon the ground of

We are cited to some extreme case port of the doctrine that an appella should order a new trial when the ant's testimony is corroborated, as the unsupported testimony of the This court has never gone farther reverse a case where the verdict i against the overwhelming weight dence, and we think that this is no for reversal under our precedents. poses of the first two points urged.

As to the third, we are of the opi there was a question for the jury, reasons given by the circuit judge. plaintiff's testimony is true, he n quiesced in the payment of $20 as wages; and, while there was gre and lack of insistence, his testimo cates that it was an open matter as Brown remained manager. Plaintif

Digitized by Google

that he did not know who was boss for a few weeks after Henry became interested in the company, and that he at once protested to him when Henry asked him to accept a check in full of account. Under his version, the notice contained in the check was waived by Henry, who agreed to investigate, and afterwards tried to settle with him. Unlike Tanner v. Merrill, 108 Mich. 58, 65 N. W. 664, 31 L. R. A. 171, 62 Am. St. Rep. 687, where the employé's conduct was held to amount to an estoppel, this plaintiff not only did not accept the check as payment, but plainly refused to do so, and the conduct of Mr. Henry, as stated by the plaintiff, showed that he so understood it.

We find no error, and the judgment is affirmed.

CARPENTER, J., did not sit. The other Justices concurred.

KOTILA v. HOUGHTON COUNTY ST. RY. CO.

(Supreme Court of Michigan. Sept. 15, 1903.)

STREET RAILROADS—INJURIES TO ANIMALS—CONTRIBUTORY NEGLIGENCE—PROXIMATE CAUSE—SPEED—STOPPING CAR—DISTANCE—PRESUMPTIONS—COMMON KNOWLEDGE.

1. Where plaintiff's cow was killed by a street railway car, plaintiff was not entitled to recover, notwithstanding his negligence in permitting the cow to be at large, on the ground that the cow stood on the tracks in plain sight of the motorman of the approaching car while it was going 150 feet down grade at great speed, which was not lessened until after the collision, and that the car went pearly 100 feet after it struck the cow before it was stopped, in the absence of evidence to show whether or not the car could have been stopped within the 150 feet under the circumstances, or showing how much its speed could have been checked in that distance by the appliances at hand.

2. In an action for injuries to a cow in collision with a street car, it could not be assumed, as a matter of common knowledge, that the car could have been stopped, or its speed so checked as to prevent the injury, within 150 feet.

Error to Circuit Court, Houghton County; Albert T. Streeter, Judge.

Action by John L. Kotila against the Houghton County Street Railway Company. From a judgment in favor of plaintiff, defendant brings error. Reversed.

Gray, Haire & Rice, for appellant. W. A. Burritt, for appellee.

CARPENTER, J. A cow belonging to the plaintiff was struck by a car operated by defendant, and killed. Plaintiff recovered a judgment of $65 in the court below. The case was tried by plaintiff upon the theory that he was himself guilty of negligence in permitting his cow to be at large. He was permitted to recover on the theory that the negligence of defendant's motorman was such that he was entitled to a verdict, notwithstanding his own negligence. Defendant contends that the evidence did not warrant a recovery on this theory. Plaintiff's testimony tended to prove that his cow stood on defendant's track, in plain sight of the approaching car in charge of the motorman, while the car was going 150 feet; that the car was going down grade with great speed; that the speed was not lessened until after the collision; and that the car went nearly 100 feet after it struck the cow before it was stopped. There was no testimony tending to show whether or not the car could have been stopped in this 150 feet under the circumstances, or tending to prove how much its speed could have been checked in that distance by the appliances at hand. If this had been the case of a collision between the defendant's car and a person of mature years crossing its track, there would be no opportunity of applying the law which permits plaintiff to recover, notwithstanding his own contributory negligence. In such a case, the motorman, as this court has held (see Lyons v. Bay Cities Consolidated Railway Company, 115 Mich. 114, 73 N. W. 139), would be warranted in acting upon the assumption that the person crossing the track would by due diligence escape injury. When, however, the motorman sees upon the track an animal like plaintiff's cow, he cannot act upon that assumption. He cannot assume that the animal will use diligence for its own protection. Nevertheless, the motorman cannot be held bound to anticipate danger to such an animal until it has reached, or at least approached, the path of the car. Therefore, in this case, to warrant the jury finding a verdict for the plaintiff notwithstanding his contributory negligence, we think the evidence should have warranted the inference that the motorman, after he discovered, or by the exercise of due care should have discovered, the cow in the position of danger, could, by the use of the appliances at hand, have either stopped the car, or so checked its speed as to prevent the injury which actually occurred. This statement of the law, as applied to this case, is, we think, warranted by the following cases: Richter v. Harper, 95 Mich., at page 225, 54 N. W. 768; Frost v. Railroad Co., 96 Mich. 470, 56 N. W. 19; Montgomery v. Lansing City Elec. Ry. Co., 103 Mich. 46, 61 N. W. 543, 29 L. R. A. 287; Fritz v. Detroit Citizens' Street Ry. Co., 105 Mich. 50, 62 N. W. 1007; Lyons v. Bay Cities Consolidated Ry. Co., 115 Mich. 114, 73 N. W. 139; Finnegan v. Michigan Central R. R. Co. (Mich.) 86 N. W. 395; Merritt v. Foote (Mich.) 87 N. W. 262. Under this rule, no verdict could be rendered for the plaintiff unless the jury could, without testimony to aid them, assume that in going this 150 feet the car could be stopped, or its speed so checked as to prevent the injury which occurred. Plaintiff's counsel says in his brief: "It is a matter of common knowledge that an electric car can be stopped within much less than 150 feet." We cannot agree with this statement. Counsel asked too much

Digitized by Google

when he asked the jury to assume, without any testimony whatever, that this car, going down grade at a great speed, could, by the use of ordinary appliances, be stopped in 150 feet. Clearly, this could not be assumed. Neither could it be assumed that in going that distance the speed of the car could be so checked that the cow would not have received injuries which, so far as damages are concerned, would have been equivalent to its destruction.

The judgment of the court below must therefore be reversed, and a new trial granted. The other Justices concurred.

ATTORNEY GENERAL ex rel. HURLEY, v. BRIDGMAN et al.

(Supreme Court of Michigan. Sept. 15, 1903.)

BANKS—DIRECTORS—ELECTION—CUMULATIVE PLAN—STATUTES—REPEAL.

1. Comp. Laws, § 8553, provides that a stockholder may multiply his shares of stock by the number of directors to be elected, and cast that number of votes for one director. *Held* that, if such act ever applied to banks organized under the banking law of 1887, it was repealed by Comp. Laws, §§ 6101, 6153, subsequently enacted, providing that bank directors shall be elected at a meeting of stockholders, each shareholder being entitled to one vote for each share for each director, and repealing all acts inconsistent therewith.

Quo warranto by the Attorney General, on relation of James J. Hurley, against Charles T. Bridgman and others. Writ dismissed.

Charles A. Blair, Atty. Gen. (Black & Roberts, of counsel), for relator. Durand & Carton and Brennan & Cook, for respondents.

MOORE, J. Mr. Hurley claims to have been elected a director of the Union Trust & Savings Bank by a vote of the minority of stockholders, voting on the cumulation plan, as provided for by section 8553, Comp. Laws. The respondents claim to be the duly elected directors of said bank, and do not recognize the election of Mr. Hurley.

Counsel are agreed that the only question involved is whether the minority of stockholders law applies to a banking corporation organized under the general banking law of the state. It is the claim of relator that it does apply, in support of which claim counsel cite the statute itself, the case of Attorney General ex rel. Dusenbury v. Looker, 111 Mich. 498, 69 N. W. 929, and other cases. It is the claim of the respondents that the law does not apply to banks, first, because article 15, § 2, of the Constitution of the state, provides "that no general banking law shall have effect until the same shall after its passage be submitted to a vote of the electors of the state at a general election and be approved by a majority of the votes cast thereon at such election," and that the law in question never was approved at a general election by a vote of the electors, and therefore cannot effect the banking law; and, second, because if it ever applied to the banks of the s was repealed, so far as affecting the by Act No. 205, p. 225, Pub. Acts 1887

In our view of the case, it will not l essary to discuss the first of these c tions. The minority of stockholders la passed in 1885 (Pub. Acts 1885, p. 11 112), and was amended by Act No. 137, Pub. Acts 1887, which was ap May 23, 1887, and given immediate Act No. 205, p. 225, Pub. Acts 1887, e "An act to revise the laws authorizi business of banking and to establish a ing department for the supervision o business," was approved June 21, 188 its terms it did not become effective u days after it had been adopted by th ors at the next general election. Sec of the act (Comp. Laws, § 6101) provi the number of directors a bank shal and how they shall be elected, and, other things, says: "At a meeting stockholders for the election of directo share shall entitle the owner to one v each director, but no stockholder sl entitled to vote, who is indebted to th upon any obligation past due." It f cult to reconcile this provision with t in the minority of stockholders law, stockholder may multiply his shares o by the number of directors to be elect cast that number of votes for one d as was done by Mr. Hurley and his in the case before us. This sectio adopted by the same Legislature whic ed the minority of stockholders law, addition to the provisions of this sec was provided by section 64 of the sa (Comp. Laws, § 6153) that all acts o of acts of which this act is amenda supplementary, inconsistent with the sions of this act, are hereby repeal follows, we think, that if the cumulati ing law ever applied to the election rectors of banks organized under the ing law of 1887, that it was repealed enactment of that law. See Sutherl Statutory Const. §§ 160, 336, and th therein cited.

The writ is dismissed. The other J concurred.

WARD v. REED.

(Supreme Court of Michigan. Sept. 15

APPEAL FROM JUSTICE COURT—PLEA NOTICE OF DEFENSE—REMARKS OF COUNSEL.

1. In the justice court, where the ac a note was commenced, defendant did pear generally, but he did appear in the court, and under leave from it filed t of the general issue. Under Cir. Ct. (3), had the action been begun there that his signature was obtained by frau not have been admissible for want of a n the defense. Had he pleaded the gener in the justice court, such defense wou been admissible without notice. *Held*, was required to give notice in confor the circuit court rule.

Digitized by Google

2. Irrelevant remarks of counsel, calculated, if not designed, to prejudice the jury on the merits, are improper.

Error to Circuit Court, Muskegon County; Fred J. Russell, Judge.

Action by Horace Z. Ward against John O. Reed. Judgment for defendant. Plaintiff brings error. Reversed.

Smedley & Corwin, for appellant. Turner & Turner, for appellee.

HOOKER, C. J. Defendant was sued in an action of assumpsit in justice's court. Upon the return day the plaintiff declared orally upon a promissory note filed with the court. The defendant appeared specially, and objected to the jurisdiction of the court, and, these objections being overruled, took no further part in the proceedings, and plaintiff took judgment. The cause was taken to the circuit by special appeal, and the questions raised by the special appeal were decided against defendant, who thereupon, under leave granted, pleaded the general issue, accompanying the plea with an affidavit denying that he signed or executed the note, or authorized any one to do so in his behalf. Upon the trial a verdict of no cause of action was followed by an appropriate judgment, and plaintiff has brought error.

The defendant was allowed to show against objection that the signature to the note was obtained through fraud and deceit. Had this action been commenced in circuit court, this proof would have been inadmissible for want of a notice of the defense relied on. See rule 7, sub. 3. On the other hand, the case was begun in justice's court, and, had the plea of the general issue been filed there, the defense would have been admissible, although no notice had been attached. See Hubbard v. Freiburger (Mich.) 94 N. W. 727. But, although it was commenced in justice's court, the plaintiff did not appear generally there. He did appear in circuit, and filed a plea under leave there given. In such a case we are of the opinion that the statutes cited in Hubbard v. Freiburger do not apply, and he was required to plead in conformity to the rule of the circuit court. The testimony was improperly admitted, and the cause must be reversed for this reason.

Complaint is also made of the remarks of counsel, and, we think, justly. It is not proper to interject irrelevant remarks, calculated, if not designed, to prejudice the jury upon the merits of the case. A litigant has a right to a fair trial, and such conduct is unfair, and should be promptly suppressed. Nearly every term of court some case is presented where this practice has been indulged in, and we are sometimes forced to think that there is method in it, and that the reluctance of the court to reverse cases, for reasons not clearly shown to have done injury, is presumed upon, though in most cases (as in the present) we are charitable enough to ascribe it to overzeal, heat, or provocation by opposing counsel. The practice is not ethical, and should be avoided.

The judgment is reversed, and a new trial ordered. The other Justices concurred.

HOGA'S ESTATE v. LOOK.

(Supreme Court of Michigan. Sept. 15, 1903.)

GUARDIAN AND WARD—MAINTENANCE FROM WARD'S ESTATE—PROBATE ORDER—NECESSITY—JUDICIAL ACCOUNTING—ALLOWANCE FOR SERVICES—DISCRETION.

1. A statute provides that if any minor who has a father living has property which is sufficient for his maintenance and education in a manner more expensive than his father can reasonably afford, the expense of such education and maintenance may be defrayed out of the income or principal of his own property, as shall be directed by the probate court. *Held* that, where a minor's only estate was derived from a judgment for damages for personal injuries, and such injuries required the making of expenditures which could not be afforded by his father, it was not necessary, in order to authorize the allowance of amounts expended therefor by the guardian, that a probate order authorizing the expenditures should have been made prior to making them.

2. The allowance of compensation to a guardian for services rendered to his ward is within the discretion of the probate judge on a settlement of the guardian's accounts.

Error to Circuit Court, Wayne County; George S. Hosmer, Judge.

Judicial settlement of the accounts of William Look, as guardian of the estate of August Hoga, minor. From a decree settling the accounts, the guardian appeals. Reversed.

William F. Atkinson (George Gartner, of counsel), for appellant. Clark, Durfee & Allor, for appellee.

MOORE, J. Prior to November, 1899, August Hoga, then a boy 10 or 11 years old, received an injury resulting in the loss of a leg. His mother, as next friend, sued the railway company, and obtained a judgment against it. In November, 1899, William Look was appointed general guardian of August Hoga, and on the 11th of that month joined the father and mother (the latter also signing as next friend) in giving a receipt to the railway company in settlement of the judgment for the sum of $1,000. It is the claim of Mr. Look that but $900 of this actually came to him; that $100 of it was retained by the mother for board and caring for the boy. After the boy became of age, Mr. Look presented his final account for allowance in the probate court in October, 1899. In this account he made a charge of $450 for services as guardian for the 10 years in which he had acted. He also made a charge of between $200 and $300 paid to the parents of the minor for board, care, and clothing furnished by them. Also charges aggregating about $200 for artificial legs purchased

¶ 2. See Guardian and Ward, vol. 25, Cent. Dig. §§ 498, 499.

Digitized by Google

for the ward, and many other items, ranging from 50 cents, paid to a dentist, to $19, paid Mabley & Co. for two suits of clothes. The account, as presented, showed a balance of several hundred dollars due the guardian. It is not possible to decide from the record what items were allowed and what were rejected, but a balance was found due from the guardian to the ward of $800. An appeal was taken to the circuit court. The trial was proceeded with before a jury, but a verdict was directed by the judge, who affirmed the action of the probate court.

It was the claim of Mr. Look that the book in which he kept a memorandum of his account with his ward had been taken from his office with other books and papers, but he produced in court receipts for most of the items. His ward, at the time of the trial a young man 23 years old, was sworn on the part of the plaintiff. He identified many of the receipts, and testified that he got all the money for which he gave receipts; that he used it for himself; and that he needed it. When asked if he was not willing Mr. Look should be allowed these sums so received, upon objection of his counsel, and being advised by the judge he could answer or not, as he pleased, he declined to answer the question. The record discloses that August Hoga was one of a family of eight or nine children. His father was a common laborer, and his mother went out nearly every day doing washings to help support the family. It also shows they had very little control over the boy, who was wayward, and gave the truant officers much trouble, and was finally sent to the Reform School. It is the claim of Mr. Look that he not only looked after the property of the boy, but at the request of his parents looked after his person, and after his return from the Reform School obtained employment for him, which resulted in his learning a good trade; that he was called upon to find him when he ran away, as he did frequently, and looked after purchasing for him the necessaries of life; and that before making any of these expenditures, he talked the situation over with the judge of probate, who advised him to make the expenditures on behalf of his ward which he did make. No formal petition was presented by the guardian, asking leave to make these expenditures, and no formal order of record was made in relation thereto. The probate judge was sworn as a witness. His recollection of what conversation occurred between him and Mr. Look in relation to making expenditures on behalf of the ward was not at all clear. He remembered advising the expenditure for the artificial legs, and about advances being made to aid the parents in taking care of a land contract or mortgage affecting the home. On the cross-examination, he testified, among other things: "Q. In fixing up this account, you construed the statute strictly against the guardian? A. Yes, sir. Q. And it was on that ground you made y lowance, not because there was ar dence that he had not paid out the or anything of that kind? A. Well, know as I went into that part, bec made my ruling on a strict construc the statute. It was a question of law thought ought to be settled, and I t it was a good time to settle it." The very significant bit of evidence as t occurred between the judge of probs Mr. Look found in the first annual a filed by Mr. Look. This account w sented to the court June 10, 1891. I guardian had credited himself wit items, aggregating $56.25, for the pu and repair of artificial legs; with or June 5, 1890, paid Mrs. Hoga for clothing, and maintenance of infant, $ other like item in October, and one cember. This account was examine allowed as charged by the judge, 1891.

I cannot resist the conclusion from timony that Mr. Look understood he w thorized by the judge to make the pa which he made. He testifies he k knowledge of the statute referred to judge of probate in his testimony. I as follows: "If any minor who has a living, has property which is suffici his maintenance and education in a more expensive than his father can ably afford, regard being had to the si of the father's family and to all the stances of the case, the expenses of t cation and maintenance of such min be defrayed out of the income or prin his own property in whole or in part, be judged reasonable, and shall be dire the probate court, and the charges t may be allowed accordingly in the set of the accounts of his guardian." The judge followed the judge of probate struing this statute, and held that, as der of record had been made authoris expenditures before they were mad should not be allowed in the final a We think this too narrow a construc put upon the statute. It does not, in require an order to be entered. In Culp, 45 Mich., at page 273, 7 N. W. is said: "A guardian whose ward's e sufficient to furnish an income that w economy maintain and educate her s should not exceed it without adequate But in this country, while it is prud obtain leave in advance, it is not nec if circumstances justify the excess; rule is always to be applied with so cretion. The guardian is justified by thorities in looking, not merely at and actual income, but at future an able resources. If the income is nar should also look to the future welfa standing of his ward, which may in h as in those of a judicious parent, re wise to secure desirable results by a su

Digitized by Google

outlay. In many, if not in most, cases in this country, it is not possible to secure a regular and reliable revenue, which will not at times fail or be delayed; and when the infant's property is too small for the income to furnish reasonable nurture and support, the principal must necessarily be drawn upon." In Mower's Appeal, 48 Mich. 448, 12 N. W. 646, it is said a guardian's account is to be dealt with as an equitable proceeding, rather than a legal one. In Chubb v. Bradley, 58 Mich., at page 271, 25 N. W. 187, it is said: "As we view the record, the only real question is whether Bradley should repay any or all of the money received by him as the proceeds of the land. The court below held that, having adopted the children, defendant was compelled to support them himself, unless there was an agreement made prior to the adoption, and as a consideration for it, and that any money not paid under such a prior arrangement could be recovered back. The charge also seems to confine the amount that could be so agreed upon to the pension money and the rent of the farm, excluding the proceeds of its sale. There is no rule of law, in our judgment, which can sustain these holdings. If it is thought reasonable and proper, in order to give a child more advantages than the income of the estate will furnish, there is no inflexible rule which will prevent resorting to the use of the principal, and it may be true economy and duty to do so. Our statutes provide that the body of a trust fund may, in proper cases, be so applied, and in Gott v. Culp, 45 Mich. 265 [7 N. W. 767], this same doctrine was applied to the ward's estate in the hands of the guardian. If children have property separate from that of parents, natural or adopted, although it may fairly be expected that the parents shall bring them up if they can at their own expense, in conformity with their means, yet it would be entirely unreasonable to refuse to give them better facilities than the parents themselves could afford, if parents and guardians should think it advisable for them, within reasonable limits." In Re Estate of Mable Ward, 73 Mich., at page 230, 41 N. W. 435, it is said: "It has been held in this court that an actual and legal father may, in case the welfare of the child demands it, be allowed to have access to the child's estate to provide for its education and support more generously than he could himself afford. Guardians have been allowed to resort to the principal, as well as the income, if required for the ward's welfare. Gott v. Culp, 45 Mich. 265, 7 N. W. 767; Moyer v. Fletcher, 56 Mich. 508, 23 N. W. 198; Chubb v. Bradley, 58 Mich. 268, 25 N. W. 186." The statute, in terms, provides for the use, not only of the income, but of the principal, if necessary in the judgment of the probate court.

The case we have before us is a very peculiar one. The only property the ward has he obtained as damages for an injury inflicted upon him personally, which made his care a greater burden to his father and mother than it otherwise would have been, and it made him less able to help pay his way when he got old enough to help support himself and the family. It was a very proper case in which to use, in a judicious way, some of his property to supply his needs.

It is urged the circuit judge erred in not allowing the guardian compensation for services, and that the charge of $450 was a reasonable one. This is a matter which appeals to the discretion of the judge who passes upon the account. The record is not so complete as to the extent of these services as to warrant us in giving any directions in relation thereto further than to cite the case of Gott v. Culp, 45 Mich., commencing at page 274, 7 N. W. 767.

Judgment is reversed, and new trial ordered. The other Justices concurred.

CONNOR v. CONNOR et al.

(Supreme Court of Michigan. Sept. 15, 1903.)

EJECTMENT—UNLAWFUL WITHHOLDING POSSESSION.

1. Persons who have, on notice to quit, moved out and vacated the premises, locking one door on the inside, and closing the other door, which was locked behind them by a spring lock, leaving the keys inside, are not in unlawful possession, so as to authorize ejectment against them, though they do not tell the owner till after action brought that the keys were in the house; he having been able to enter, as he thereafter did, by a window.

Error to Circuit Court, Wayne County; Morse Rohnert, Judge.

Action of ejectment by Mary Connor against Martin Connor and another. Judgment for defendants. Plaintiff appeals. Affirmed.

James H. Pound, for appellant. Howard B. Bloomer, for appellees.

HOOKER, C. J. The plaintiff's aunt, Bridget Mahan, owned the premises, consisting of a parcel of land and two houses. The defendants lived with her in one of the houses at the time of her death, September 24, 1901. Bridget Mahan deeded the premises to the plaintiff, subject to a life estate reserved to herself, by deed acknowledged November 9, 1892. Four days after Bridget's death, the plaintiff caused notice to vacate to be served upon the defendants, threatening ejectment for noncompliance. No time was stated in the notice. The plaintiff ascertained on November 1st that the defendants had vacated the house. She went to the place, and found it locked up, and the windows fastened. Thereupon her counsel wrote to Mr. Connor, and asked that he deliver the keys to the bearer, or he would be obliged to charge him rent at $25 per month. It does not appear when this letter was served, or what reply was made to it, except the state-

Digitized by Google

ment by the plaintiff that it was served on the 5th by an officer. On November 7th this action was brought, and on the 9th the plaintiff received a letter from Martin Connor, stating that the keys were left in the house, and that he had no key to the spring lock on one of the doors. There is nothing to indicate that this was not true. He also wrote that plaintiff could easily get into the house, and would find the keys there. Some days later, the plaintiff entered through a second story window. On the trial defendants' counsel disclaimed for his clients any title or right of possession, and, after the proofs were closed, moved the court to direct a verdict for the defendants, and offered to waive costs, and the court granted the motion, and a judgment was entered accordingly. The plaintiff has appealed.

The only question in the case is whether the defendants unlawfully withheld the possession of these premises from the plaintiff when the action was begun. It is undisputed that, in compliance with counsel's notice, they moved out and vacated the premises, locking one door on the inside, and closing the other door, which was locked behind them by a spring lock. They kept no key. Whatever the plaintiff may have thought, this was an abandonment of possession, as a matter of fact, and there is nothing to indicate that the defendants ever made a claim of title of any kind. The statement that the plaintiff would get the house when the law gave it to her was not a claim of title, when viewed in the light of the undisputed facts. In this respect the case differs from Whiteley v. Whiteley, 110 Mich. 556, 68 N. W. 241. There being no claim of title, and the proof conclusively showing that there was no possession, plaintiff's case has nothing to rest upon. Apparently, counsel commenced it upon the belief that by retaining the key defendants retained possession. But it turns out that they did not retain the key, and all that is left is the fact that they did not tell the officer so when notified that if the key was not delivered they would be charged rent. Plaintiff and her counsel knew that the house was vacated in compliance with their notice, and they could have entered as easily on the 7th day of November, before bringing suit, as they could afterwards.

The judgment is affirmed. The other Justices concurred.

In re ARCHER.

(Supreme Court of Michigan. Sept. 15, 1903.)

GRAND JURIES—REQUIRING PRODUCTION OF BOOK—CONTEMPT—PRACTICE.

1. Neither the rule of public policy prohibiting a disclosure by a grand juror of facts coming to his knowledge while a member of the grand jury, nor Comp. Laws, § 11,887, relating to testimony of grand jurors on a trial, prevents the grand jury making a report to the court for the purpose of having punished for contempt a witness who refused to produce before it his books showing certain transactions.

2. In criminal contempt proceedings, under Comp. Laws, § 1098, for refusal to bring books before the grand jury, the practice in requiring immediate obedience to the order of the court is not irregular; section 10,909 providing for the furnishing of interrogatories, with time to answer, being in the chapter relating to attachments to enforce civil remedies.

3. The proper practice for one summoned to produce books before the grand jury is to produce them, and, on being requested to exhibit any of them, to raise the question of materiality of portions thereof to the issue, and have it determined by the court, if necessary.

Certiorari to Circuit Court, Wayne County; Joseph W. Donovan, Judge.

Petition by John Archer for writ of habeas corpus and certiorari. Discharge denied.

Flowers, Moloney & Bishop, for petitioner. Ormond F. Hunt, Pros. Atty., for the People.

MONTGOMERY, J. The petitioner has sued out a writ of habeas corpus and certiorari to review the action of the circuit court for the county of Wayne in committing him to the custody of the sheriff for a contempt of court in refusing to produce his books and papers before the grand jury now in session in said court. Briefly stated, the proceedings in which the contempt was adjudged were as follows: The grand jury made a report that the witness was required to appear before them under a subpœna duces tecum, and was called upon to produce his books, checks, receipts, bills, invoices, etc., showing his transactions with the city of Detroit and the department of public works of said city, whether in his own name or in the name of himself and others, between the 1st day of January, 1901, and the 1st day of July, 1903; that he appeared before such jury, but refused to produce the books, not, however, claiming any privilege on the ground that anything contained in them would tend to incriminate him, but placing his refusal upon the ground that he was not compelled to produce them. Acting upon this report of the jury, the court made an order to show cause why he should not be punished for contempt. This writ was returned, and before later proceedings, notice was served upon him to appear before the court, and produce the books and papers to be used before the grand jury. This he failed to do, and on the 4th of September he was adjudged guilty of contempt in failing to obey the subpœna, and in failing to obey the order of the court; he having appeared before the court on the 4th, and having refused to produce his books before the grand jury.

It is urged in this court that the proceedings are irregular and invalid, for the reason that the report of the grand jury divulged the nature of the proceedings before them, and that public policy does not admit of the grand jury stating such facts publicly, and spreading them upon the court records. A

Digitized by Google

discussion of this question might perhaps be avoided, inasmuch as there was a direct refusal to obey the court order of like character, but as the question is of some importance, and as the ruling of this court in the two cases of People v. Lauder, 82 Mich. 109, 46 N. W. 956, and People v. Thompson, 122 Mich. 411, 81 N. W. 344, appears to have been misapprehended, we take the occasion to say that we do not think the rule of public policy prohibiting a disclosure by a grand juror of facts coming to his knowledge while a member of the grand jury is to be so construed as to block the wheels of justice, and bar the grand jury from compelling, through the instrumentality of the court, a recalcitrant witness from obeying the mandates of the court. The grand jury is an arm of the court, but it is without power to enforce its own process by its own mandate. How, then, shall a witness who refuses to answer a question before a grand jury be dealt with? It is very clear that it must be made known to the court that the witness has refused to comply with the court's mandate before the court can act. There are only two ways that this might be done, and that is either by a report of the grand jury to the court, or by an affidavit of some one of the grand jurors or the prosecuting officer. Section 11,887, Comp. Laws, relates to the testimony of grand jurors upon trial, and was not intended to prevent such information being conveyed to the court itself as that embodied in the present report. A very well reasoned and instructive case upon this subject is Heard v. Pierce, 8 Cush. 338, 54 Am. Dec. 757, in which cases are cited which fully sustain the right of the grand jury to take the steps taken in this case, and there is nothing in the decisions of the Lauder or Thompson Cases which in our judgment militates against these holdings. Acting upon this information, the respondent was required to appear and show cause, and, in addition to this, was, by express order of the court, required to produce the books before the jury, and refused to do so. He complains of the practice, and says he should have had the opportunity of having interrogatories furnished and given time to answer. He bases this contention upon section 10,909 of the Compiled Laws, which is a section of the chapter relating to attachments to enforce civil remedies. The present is a criminal contempt, and comes within the provisions of section 1098, Comp. Laws. The practice was not irregular in requiring immediate obedience to the order of the court.

It is next urged with considerable force that as the report of the grand jury shows that the jury are not attempting to indict or proceed against Archer himself, and that there is no claim that the books and papers required to be produced are evidence against him, that the evidence sought is immaterial and incompetent, as it is said the books of account may not be used in evidence against any other person. It is to be noted that the books are not produced in answer to the subpœna, and the question then raised as to particular items, nor does the case present any question as to whether the books of account are sought to be used against any other than John Archer, who might be entitled to protection of the court; but we are asked to say, as matter of law, that under no circumstances could these books of account, or any entries in them, be any evidence of competent facts against any other person than John Archer. Apart from the fact that the proper practice has not been pursued by petitioner, we are not prepared to say, as matter of law, that there may not be entries in the books which might be proper evidence as against parties other than petitioner. This could only be shown by an inspection of the books. It is due to the petitioner that it should be stated that his counsel offered to produce the books, and permit an inspection by the trial judge, on condition that portions of books immaterial to the issue before the grand jury should be sealed up, and only such parts submitted as had a bearing upon the questions under consideration. The proper practice for the petitioner to pursue is to produce his books before the grand jury, and upon being requested to exhibit any one of the books or vouchers, raise the question of materiality, and then have it determined by the court, if necessary.

The application for discharge on habeas corpus will be denied, and the petitioner remanded to the custody of the sheriff. The other Justices concurred.

LORD v. NATIONAL PROTECTIVE SOC.

(Supreme Court of Michigan. Sept. 15, 1903.)

BENEFICIAL ASSOCIATIONS — DUES — DELINQUENT PAYMENT—FORFEITURE—WAIVER—AGENTS—AUTHORITY.

1. Where a policy provided that a failure to pay dues should operate to forfeit all rights of insured under the policy, and that the local agent of the society could not waive the provision that such nonpayment would terminate the policy, the local agent's receipt of delinquent dues, with the statement that a late payment made no difference, as "lots of the members paid late," did not constitute a waiver of the forfeiture.

2. A member of a beneficial association incurred a forfeiture by failing to pay premiums in time, and thereafter the delinquent premium was paid to the head office of the society. Shortly after the payment, insured received a notice from the society that he had been suspended, and that he could be reinstated if in good health on payment of one dollar to the local secretary. He paid no attention to this notice, and thereafter paid dues for two subsequent months, which were received by the local secretary, and retained by the society without objection until after the member's death, when a part only of the assessments so paid were tendered back, but refused. *Held*, that the reception and retention of such premiums by

¶ 1. See Insurance, vol. 28, Cent. Dig. § 1903.

Digitized by Google

the head office of the society constituted a waiver of the forfeiture.

3. The discretion of the circuit judge on the question of amending the declaration in a suit on a benefit certificate will not be reviewed on appeal, except in a clear case of arbitrary and unjust exercise of power.

Error to Circuit Court, Lapeer County; George W. Smith, Judge.

Action by Leon Lord against the National Protective Society of Bay City. From a judgment in favor of plaintiff, defendant appeals. Affirmed.

Herbert W. Smith, for appellant. R. L. Campbell and Geer, Williams & Halpin, for appellee.

HOOKER, C. J. This cause has been before us heretofore, and will be found reported in 88 N. W. 876, where an outline of the facts upon which it rests is stated. Upon the former trial, the court directed a verdict for the defendant, and his judgment was reversed, this court holding that under the testimony the court should not have decided that there was no waiver of the provisions of the policy. There was another question relating to damages. While our opinion in that case states that the court erred in directing a verdict for the defendant, it does not say that a verdict for the plaintiff should have been directed; the propriety of which instruction is involved upon this hearing.

It is claimed that the testimony was different upon the second trial, in respect to the tender of dues paid, from what it was on the earlier trial. The testimony showed upon this trial, as it did upon the first, that according to the express terms of the certificate, sick benefits did not accrue for sickness suffered at a time when plaintiff had not been a member in good standing for the previous three months, and that a failure to pay dues at the time fixed for their payment terminated membership, but subject to reinstatement upon payment of the dues if the member continued in good health. The certificate also plainly stated that one must have been a member in good standing for three months after reinstatement before becoming entitled to sick benefits. Accident benefits were not so limited. The certificate also contained the following provision: "The observance of the provisions and conditions aforesaid, the strict compliance therewith, and the continuance of this contract are conditions necessary to the insurance, and to its validity and enforcement, and no waiver shall be claimed by reason of the act of any agent or person unless such acts shall be specially authorized in writing over the signature of the secretary of the society." It is undisputed that the payment which fell due August 1st was not paid at that time, consequently the policy became void, under the provisions of the certificate: "And it is further provided and understood that this policy shall cease and be void unless the payments required to be made there-

under shall be promptly paid on or be
first day of the month in advance."
more was done until August 25th
Emma V. Lord, plaintiff's sister, actin
behalf, paid $1 for the August 1st p
to Mr. Swan, a local agent of the def
She testified that she asked him befo
ing the payment "if it made any di
paying late in the month, and he sai
not; lots of members paid late." A
two later she received the following

"National Protective Society.

"Notice of Lapsed Membership.

"Bay City, Mich., Aug. 25,

"Dear Sir: Failure to pay your l
mium call has caused your certifi
membership to lapse, and you stand s
ed from all benefits of the society.
may have been caused by negligence
getfulness on your part, if not sufferi
sickness or accident, be reinstated as
vision of your certificate by paying
lar to the local secretary of your div
at home office within ten days from
this notice. Fraternally,

"F. S. Dewey, Secr

"[Signed] ———— Applica
"Witnessed: ———— Local Sec

She paid no attention to this whate
lying on Swan's statement. Mr. Sw
the money over to the company son
afterward. The question in the case
of waiver. It was expressly agreed
contract, as shown by the certificate,
local agent could not waive the provis
nonpayment of dues when due would
nate the policy. Hence the payment
August 1st dues on August 25th to h
his statement that it was all right,
have constituted a waiver binding u
company under the proofs. Nor was
that it did in our former opinion, w
was expressly avoided. We said:
this condition of things, we do not
necessary to discuss whether the loca
could waive the time of payment o
dues or not." That opinion states tha
ments were made to the local secret
August, September, and October. Th
retained by him until he forwarded h
ber report, when he sent them to th
pany, including them in his report
from Mr. Lord for August, Septemb
October. The home office did not re
his acts, and decline to receive the m
dues, and return it, but at the time
was brought it retained the money, a
has it. * * * It was one of the
that the home office could waive. T
does not favor forfeitures, and we
think the home office can receive and
this money when it was paid as du
at the same time claim a forfeiture."
the judgment was reversed. Upon th
there was testimony that two dollars
money was tendered back before su

Digitized by Google

not accepted. This did not cover the payment of August 25th, however, as the September and October dues, at least, had then been paid and received as such, as stated in our former opinion, and as indicated by the testimony in this record.

We are of the opinion that the proof is not essentially different upon this record from what appeared before, and that the uncontradicted evidence is to the effect that these dues were paid and received by the company as dues seasonably paid, to keep the policy alive and unimpaired. There is nothing to indicate that either party supposed there had been a lapse and reinstatement.

We find no other question of importance, except that relating to the amount of the verdict. Of that it is sufficient to say that the court appears to have been anxious to state the amount correctly, and asked counsel to say whether there was any dispute about the amount, but did not succeed in getting a definite answer as to the amount that they claimed had been shown. We will not review the discretion of the circuit judge upon the question of amending the declaration. This should not be done, except in clear cases of arbitrary and unjust exercise of power.

The judgment is affirmed. The other Justices concurred.

WOLKINS v. KNIGHT.

(Supreme Court of Michigan. Sept. 15, 1903.)

SALES—ACTION FOR PRICE—PARTIES—LIMITATION OF ACTIONS—FRAUDULENT CONCEALMENT.

1. Comp. Laws, § 9739, provides that if any person shall fraudulently conceal a cause of action from the knowledge of the person entitled thereto, the action may be commenced at any time within two years after discovery thereof, though it would otherwise be barred by limitations. Plaintiff's husband, just prior to his death in 1890, sold over $600 worth of apples to defendant. Plaintiff knew that her husband had received from defendant one payment of $100, but, as her husband kept no accounts, she requested two persons to ascertain the state of the account from defendant. Defendant showed his books, which disclosed an additional payment of $500, leaving, as defendant claimed, $61 due plaintiff, which he paid. Plaintiff did not discover that the alleged payment of $500 had not been made until 1901. *Held*, that such facts justified instructions that unless plaintiff, in the exercise of reasonable diligence, ought to have discovered the state of the account before, and if defendant fraudulently concealed the same, and plaintiff did not know of such fraud until 1901, her right of action was not barred by limitations, were improperly refused.

2. Where deceased sold certain apples to defendant in which another had an interest, but the entire transaction was between defendant and deceased, and long prior to suit brought decedent's administratrix settled with such other owner for his interest, she was entitled to recover from defendant for the entire balance of the account.

Error to Circuit Court, Berrien County; Orville W. Coolidge, Judge.

¶ 1. See Limitation of Actions, vol. 33, Cent. Dig. § 511.

Action by Frances Wolkins, as administratrix of the estate of P. Wolkins, deceased, against David Knight. From a judgment in favor of defendant, plaintiff brings error. Reversed.

O'Hara & O'Hara, for appellant. Lawrence C. Fyfe, for appellee.

MOORE, J. The plaintiff is the administratrix of the estate of her deceased husband. She sued to recover an amount due for apples delivered by her husband to defendant in his lifetime. The defendant pleaded the statute of limitations. After the proofs offered on the part of the plaintiff were all in, and before any testimony was offered on the part of defendant, the circuit judge directed a verdict in favor of defendant. The plaintiff has brought the case here by writ of error.

The sole question in the case is whether plaintiff has brought herself within the provisions of section 9739, Comp. Laws, which reads as follows: "If any person who is liable to any of the actions mentioned in this chapter, shall fraudulently conceal the cause of such action from the knowledge of the person entitled thereto, the action may be commenced at any time within two years after the person who is entitled to bring the same shall discover that he has such cause of action, although such action would be otherwise barred by the provisions of this chapter." It was the claim of the plaintiff, and she offered proofs tending to show it, that her husband, who was a farmer, sold upwards of $600 worth of apples, the product of eight orchards, to the defendant in the fall of 1889; that he was taken ill with typhoid fever shortly thereafter, and died on the 19th of January, 1890; that she knew her husband had received one payment of $100, but did not know how much was still unpaid; that after the death of her husband, she sent two persons to see defendant, who lived seven or eight miles away, to learn the condition of the account, who were shown by defendant his book of accounts, which contained an entry of $100 paid on the apples, and another of $500 paid thereon, and that Mr. Knight stated the $500 payment was made on Thanksgiving day by him to Mr. Wolkins, and that there remained due but $61. Mrs. Wolkins afterwards saw Mr. Knight, who assured her he had paid her husband the $500 on Thanksgiving day, and there was but $61 unpaid, which amount he afterwards paid to her. It was Mrs. Wolkins' claim, and she so testified, it was not until shortly before this suit was brought she learned Mr. Knight was indebted to her husband at the time of his death $561, instead of $61 as represented to her agent and again to her by Mr. Knight. Two witnesses were introduced by her whose testimony, if true, established the indebtedness as being upwards of $500.

Before the court directed a verdict, the

Digitized by Google

attorneys for the plaintiff requested the court to instruct the jury as follows: "First. If you find from the evidence that defendant was owing Peter Wolkins at the time of his death upwards of $500, and you further find that he fraudulently concealed this fact from the plaintiff, and you also find that plaintiff did not know of this fraudulent concealment until July or August, 1901, then I charge you that plaintiff's right of action is not barred by the statute of limitations. Second. That unless you find the plaintiff had either actual knowledge, or ought to have had actual knowledge, under the circumstances, by reasonable diligence, then that account is not barred by the statute of limitations, and if they find the other facts the plaintiff is entitled to recover."

We think under the provisions of the statute and the testimony offered on the part of the plaintiff these requests should have been given. The following cases are in point: Turnpike Corporation v. Field et al., 3 Mass. 201, 3 Am. Dec. 124; Sherwood v. Sutton, 5 Mason, 143, Fed. Cas. No. 12,782; Haynie v. Hall's Executor et al., 5 Humph. 290, 42 Am. Dec. 427; Shannon v. White, 6 Rich. Eq. 96, 60 Am. Dec. 115; Reynolds v. Hennessy (R. I.) 23 Atl. 639; Lieberman v. Bank (Del.) 45 Atl. 901, 48 L. R. A. 517, 82 Am. St. Rep. 414; Bank v. Perry (Mass.) 11 N. E. 81; O'Dell v. Burnham et al., 61 Wis. 562, 21 N. W. 635; Marbourg v. McCormick, 23 Kan. 38; Tompkins v. Hollister et al., 60 Mich. 470, 27 N. W. 651; Stebbins v. Patterson, 108 Mich. 537, 66 N. W. 484; Allen v. Conklin, 112 Mich. 74, 70 N. W. 339.

It is suggested that the cause of action cannot be maintained by the plaintiff because Mr. Flowers also had an interest in the apples. It is true he had an interest in five of the orchards, but the record shows that, as related to Mr. Knight, the transaction was between him and Mr. Wolkins. He paid to the latter the $100, and to his administratrix the $61, which he claimed settled the account. It also appears that the administratrix settled with and paid Mr. Flowers long before the suit was brought for the apples in which he had an interest. It is claimed Mrs. Wolkins had knowledge which ought to have advised her of the true situation. We think the record does not so disclose. It does not appear her husband kept books showing the transaction. She went to the one who knew what the facts were, and who ought to have told her the truth. He cannot be heard to complain because she relied upon what he told her.

The judgment is reversed, and a new trial ordered. The other Justices concurred.

BLOODGOOD et al. v. TERRY et al.

(Supreme Court of Michigan. Sept. 15, 1903.)

CONTRACTS—CONDITIONAL SALES—PERSONAL PROPERTY—TRUSTS.

1. Defendant's testatrix, in October, 1858, delivered to plaintiff's intestate, her daughter, an instrument by which she sold and transferred certain stock described and all her interest in the estate left by testatrix's father, subject to the use of her mother during her life, on condition that testatrix was to have the income of the stocks mentioned, and of her father's estate during her natural life; and after her death said stocks and estate and the income therefrom were to be the property of plaintiff's intestate, her heirs and assigns, forever. On August 10, 1859, testatrix bequeathed to intestate, the said property previously described in the instrument executed in 1858, but, intestate having died before testatrix, she, in March, 1902, executed another will, which was admitted to probate after her death, bequeathing the amounts received from the stock conditionally conveyed to intestate to testatrix's grandchildren and beneficiaries named, who were intestate's heirs, together with other personal ornaments,' etc. *Held*, that the instrument of October 7, 1858, conveyed to intestate and her heirs the property described therein, reserving to testatrix the income as long as she lived, and did not create a trust of the property so conveyed for the benefit of intestate and her heirs.

Appeal from Circuit Court, Monroe County, in Chancery; Guy M. Chester, Judge.

Action by Lynott Bloodgood, as administrator of the estate of Eliza A. Bloodgood, deceased, and others, against Milton G. Terry, as executor of the will of Louisa P. Terry and as an individual. From a decree in favor of complainants, defendants appeal. Reversed.

C. A. Golden and E. R. Gilday, for appellants. George M. Landon (Fred A. Baker, of counsel), for appellees.

MOORE, J. The bill was filed to establish a trust and for an accounting. Louisa P. Terry, deceased, was the mother of appellant and grandmother of complainants, the children of Eliza Bloodgood, deceased, who was the only sister of appellant. The circuit judge held that by virtue of two instruments (which will be referred to later) Louisa P. Terry became and was a trustee of Eliza T. Bloodgood and her heirs, and held the legal title to all the property in said instruments described and mentioned, and of all the income and accumulations thereof, not expended by her in her lifetime, in trust for the use and benefit of said Eliza T. Bloodgood and her heirs, to be delivered and paid to them on her decease, and that her executor should be compelled to account therefor. From that decree the defendants have appealed.

The record discloses that Mr. Harvey Terry, the husband of Louisa P. Terry, was a resident of Connecticut; that he died prior to 1858, leaving a will, by which he gave to his wife five acres of land and a life interest in the home lot, containing about seven acres. He also gave to her absolutely the household furniture and other personal property, including 11 shares of stock in one bank, and 9 shares of stock in another. He gave to his only daughter, Eliza, who, prior to October, 1858, became Mrs. Bloodgood, the privilege of a home in the homestead as long as she remained unmarried, his melodeon, and 10 shares of bank stock. He gave all the rest

Digitized by Google

of his estate to his son, Milton G. Terry, the defendant. In October, 1858, Mrs. Terry executed and delivered to her daughter an instrument reading as follows: "In consideration of natural affection and of one dollar to me paid, which I hereby acknowledge paid, I, Louisa P. Terry, of Enfield, Conn., do hereby sell, assign and agree to transfer to my daughter Eliza, the wife of Rev. A. L. Bloodgood, of the same place, the following described stocks, and all my right, title and interest to and in the same, subject however, to the conditions hereinafter specified, to-wit: Eleven shares of the capital stock of the John Hancock Bank, of Springfield, Massachusetts, amounting to eleven hundred dollars, the certificate thereof being No. 497, bearing date of July 14th, 1858, made to Louisa Terry (which should have been Louisa P. Terry), of Enfield, Conn., and signed J. W. Thompson, president, and E. D. Chapin, cashier. Also nine shares of the capital stock of the Western Bank of Springfield, Massachusetts, in two certificates, one of seven shares of number 341, bearing date of January 1st, 1857, made to H. Terry, of Enfield, Conn., and signed by C. Rice, president, and G. P. Bissell, cashier, and one certificate of two shares, of number 462, bearing date of October 9th, 1851, made to Harvey Terry of Enfield, Conn., and signed by C. Rice, president, and G. P. Bissell, cashier. And also, in consideration of affection and of one dollar to me paid, which I hereby acknowledge paid, do I hereby sell, assign and agree to transfer to my daughter Eliza, the wife of said Rev. A. L. Bloodgood, all of my right, title and interest in the estate left by my father, Elisha Parsons, deceased, subject to the use of my mother, Louisa Parsons, during her natural life, and whatever shall be coming to me from my said father's estate at the death of my mother. The condition alluded to above is this, to wit: That I am to have the income of said stocks mentioned above, and also the income accruing from my said father's estate to me upon the death of my mother during my natural life. And after my decease, the said stocks, and all of my interests in the estate of my father, Elisha Parsons, both by will as well as purchase made of my sister, Mrs. Amelia Chapin, since my father's death, and all income arising therefrom, are to be the property of my said daughter Eliza, her heirs and assigns forever. Witness my hand and seal this seventh day of October 1858. Louisa P. Terry." August 10, 1859, Mrs. Terry delivered to her daughter an instrument. The parts material to this controversy read as follows: "The last will and testament of L. P. Terry. I, Louisa P. Terry of the town of Enfield, State of Connecticut, being of sound mind and memory, but mindful of the uncertainty of all human events, do ordain this my last will and testament, in the following words, to wit: My late deceased husband, prior to his death, and myself, having given in a will to our son, Milton G. Terry, his full and entire share of all our properties owned or coming to us, and not having given our daughter, Eliza, her just and equal share, but having been requested by my husband so to do after his decease, do therefore, in order to make such just distribution, give, devise, and bequeath to my said and only daughter Eliza, the wife of the Rev. A. L. Bloodgood, of Enfield, Connecticut, and to her heirs and assigns forever, the following described stocks, and all my right, title and interest to and in the same to-wit." Then follows a description of the bank stock mentioned in the instrument of October 7, 1858. "And I also give, devise and bequeath to my said daughter Eliza, the wife of the said Rev. A. L. Bloodgood, all of my right, title and interest in the estate left by my father, Elisha Parsons, deceased, subject to the use of my mother Louisa Parsons, during her natural life, and whatever shall be coming to me from my said father's estate, including also, whatever shall come to me of the purchase of my sister, Amelia Chapin's portion, made since my father's death, intending to make my daughter Eliza my sole legatee after my death. Louisa P. Terry. [Seal.]" Attached to this instrument was the following: "Having received all that should justly come to me of my father's or mother's property, I certify to the above as justly due to my sister Eliza, now Mrs. A. L. Bloodgood, and therefore renounce all interest, right or title whatever in the same, forever. Milton G. Terry. August 10, 1859." Mrs. Bloodgood, the daughter, died in October, 1888, leaving complainants her only heirs at law. It was the two instruments mentioned above which the circuit judge held constituted a trust.

A further statement seems necessary to an understanding of the case. It is the claim of defendant, and there is testimony tending to sustain it, that after the death of Harvey Terry defendant and his mother continued to live on the homestead in Connecticut for eight years; that he improved the farm, greatly increasing its value; and that from the income from the farm and the $1,100 stock in the John Hancock Bank his mother bought from $1,500 to $2,000 worth of United States bonds. It is his claim that in 1865 the defendant and his mother sold the real estate in Connecticut for the sum of $8,000; that of the real estate so sold the defendant owned 27 acres and the fee to the home subject to the mother's life estate, and the mother owned, in addition to her life estate in the home lot, 5 acres of land in fee; that the defendant and his mother then moved to the city of Monroe, Mich., and invested between $6,400 and $6,700 in a home in said city, the title to which was taken in the mother's name; that the balance of the $8,000 was given to the mother, who kept it invested till the time of her death. Mrs. Terry died in

Digitized by Google

March, 1902, at the age of 93 years and 5 months. At the time of her death her estate inventoried $8,225. During her lifetime she assigned to defendant mortgages aggregating $2,000. On August 10, 1899, she made her last will, by the terms of which she gave to complainants "eleven shares of the capital stock of the John Hancock National Bank of Springfield, Mass., with all interest and dividends thereon that may be unpaid at the time of my decease"; and, further, "I give and bequeath the sum of $1,900 to be divided between them share and share alike, and to be paid to them within one year after my decease until so paid." "The $1,900 as above bequeathed is the full amount and sum I received and realized from the nine shares of the stock of the Western Bank, Springfield, Mass., and from my father's estate and from the purchase from my sister, Amelia Chapin, and this, with the eleven shares of the bank stock of the John Hancock National Bank, is in compliance with and discharge of the agreement heretofore made with my daughter Eliza Bloodgood, now deceased, the mother of my said grandchildren, the beneficiaries above named." It also gave to the complainants the wearing apparel and personal ornaments, silver and china ware, etc., of the deceased. This will was duly admitted to probate.

On the part of defendant it is claimed the paper of October 7, 1858, was not a transfer of property, but at most was but an agreement to transfer at some future time, and was without consideration, and revocable; that the parties so construed it when Mrs. Terry made the will in 1859. In our view of the case, we do not deem it necessary to decide this contention. Giving the instrument of October 7, 1858, the fullest effect, we think it conveys to Mrs. Bloodgood and her heirs the property described therein, reserving to Mrs. Terry the income therefrom as long as she lived. There is no ambiguity in the language used. This, too, was the construction put upon it by the parties. Mrs. Terry lived nearly 44 years after the delivery of the paper of October, 1858. During that time no one asked her for the unexpended portion of the income. Thirty-one years after making the paper she gave her understanding of the transaction by the making of the will which was admitted to probate. We think the circuit judge erred in the construction he gave to the language employed by Mrs. Terry. It is not questioned that the will which was admitted to probate accounts for the proceeds of all the property mentioned in the paper of October, 1858, exclusive of the income therefrom during the life of Mrs. Terry. It follows there was no occasion for filing the bill of complaint.

The decree is reversed, and one will be entered here dismissing the bill of complaint, with costs of both courts to the defendants. The other Justices concurred.

DONALDSON v. DONALDSON

(Supreme Court of Michigan. Sept. 15

DIVORCE—APPEAL—REVIEW—ALIMO

1. A decree in divorce, justified by c
timony, if believed, will not be disturbed
peal.

2. The allowance of $250 only as ali
one from whom her husband obtained a
will not be disturbed, the evidence
that he owned real estate worth $2,
which was a mortgage of $1,000; that
almost no personal property, and was
but a small salary; that there was
of the marriage; that he was in debt
hundred dollars; that the parties lived
less than a year; and that she contribut
ing towards the accumulation of his p

Appeal from Circuit Court, Mu
County, in Chancery; Fred J. Russell,

Suit by John J. Donaldson against
Donaldson for divorce. Decree for co
ant. Defendant appeals. Affirmed.

Cross & Lovelace, for appellant.
Sessions, for complainant.

MOORE, J. In this case each party
ing a divorce from the other—the co
ant upon his bill of complaint, the de
upon her answer in the nature of a cr
The ground of divorce alleged in ea
is extreme cruelty. The proofs were
in open court. A decree was granted
plainant. Defendant was given the
hold furniture, $250 alimony, and th
and was required to release her inte
complainant's real estate. She brin
case here by appeal, claiming the
should have been granted her upon he
bill, and that a larger amount of
should have been decreed to her. The
shows complainant was 37 years old.
fendant is 11 years younger. Comp
married his first wife in 1899. Six
later, on January 25, 1900, he obtaine
cree of divorce from her. In June, 19
parties to this litigation got acquainte
each other. The defendant was th
mother of four small children, living
from her husband, from whom she o
a divorce on the 24th day of Octobe
On the 8th of November, 1900, she
the complainant. They commenced
ing the next day, and according to th
mony of each of them, the quarrel
most continuous until this bill was fil
9th of October, 1901. According to
timony of the husband, the wife with
casion accused him of unchastity, and
him vile names, and made life perfect
erable for him. According to the tes
of the wife, the conditions were com
reversed. Her testimony is that with
casion the complainant was jealous
and called her vile names. She cla
agreed to support her two little girls
former husband, and refused to do so
timony that covers nearly 150 pages
printed record was taken in open co

Digitized by Google

is not possible to harmonize this testimony. Someone is not telling the truth. It is a case where it is especially desirable to see and hear the witnesses, to observe their manner of giving testimony, their candor, or lack of candor, their intelligence, or lack of intelligence. There are many aids possessed by the judge who hears the oral testimony in deciding who of the witnesses are truthful that do not get upon the printed page. The case made by the testimony offered on the part of the complainant, if believed, justified the decree made by the circuit judge. On the other hand, if this testimony was untrue, and the defendant and her witnesses told the truth, the defendant should have been granted a decree upon her cross-bill. The question involved is purely a question of fact. It would profit no one to go over this evidence in detail. After a careful reading of all of the voluminous record, we are not prepared to say the circuit judge erred in granting the decree as he did. Nicholas v. Nicholas, 50 Mich. 162, 15 N. W. 64; Cummings v. Cummings, 50 Mich. 305, 15 N. W. 485; Warner v. Warner, 54 Mich. 492, 20 N. W. 557; Karreman v. Karreman, 122 Mich. 654, 81 N. W. 576, and the many cases cited in the last-named case.

It is claimed a larger sum should have been allowed as alimony. The testimony upon which a court would be justified in acting shows the complainant owns real estate worth $2,500, upon which is a mortgage of $1,000. He has almost no personal property. He is earning a small salary. There is no child living the issue of this marriage. He is in debt several hundred dollars. The parties lived together less than a year. Defendant contributed nothing toward the accumulation of the little property possessed by the complainant. This being the situation, we are not inclined to disturb the decree.

It is affirmed. The other Justices concurred.

DE LAND v. HALL.

(Supreme Court of Michigan. Sept. 15, 1903.)

SHIPPING—ACTION FOR MASTER'S WAGES—VARIANCE—STATUTE OF FRAUDS—CONTRACT TO BE PERFORMED WITHIN THE YEAR—COMPROMISE VERDICT—EVIDENCE.

1. Where the master of a tug sued for wages, alleging in his declaration employment for the season at $120 per month, but filing a bill of particulars for $90 per month, and the testimony on his part tended to show a hiring for "going wages," which for such vessels were from $100 to $120 a month, there was not a fatal variance.

2. Where a contract for the hire of a master for a tug was made November 14th for the ensuing season, the season for the current year having closed the previous day, and counsel agree that the term "season of navigation" defines a period commencing April 1st and ending December 5th, the contract is not within the statute of frauds (Comp. Laws, § 9515), as an agreement "that by its terms is not to be performed in one year."

3. Evidence in a suit by the master of a tug for wages *held* to warrant a verdict for the amount found, so as to negative the contention that either more or nothing was due, and hence the verdict must have been a compromise one.

Error to Circuit Court, St. Clair County; Harvey Tappan, Judge.

Action by Leander S. De Land against Edmund Hall. Judgment for plaintiff, and defendant brings error. Affirmed.

Phillips & Jenks, for appellant. Frederick B. Brown and John B. McIlwain, for appellee.

MOORE, J. This is an action for breach of contract. Defendant was the owner of the tug Argyle, and for a portion of the sailing season of 1899 plaintiff was acting as captain of said tug. At the close of his employment that year, he visited the office of the defendant for the purpose of obtaining wages due, and claims he made a contract with the defendant to act as captain of said vessel for the season of 1900. He became master of said vessel on the 7th of April, 1900, and continued in that capacity until the 16th day of May, when he was discharged. Defendant denies any contract for the season was entered into, and claims plaintiff was engaged at a specific rate of wages per month, under contract made at a later date with defendant's superintendent. The case was tried by a jury, who returned a verdict in favor of the plaintiff for $407.40. A motion was made for a new trial, which motion was overruled. The case is brought here by writ of error.

It is claimed that because of a variance between the pleadings and proofs a verdict should have been directed in favor of defendant. The declaration alleged that "on November 14, 1899, defendant employed plaintiff to act as master of the tug Argyle for the season of 1900, to wit, a period of nine months, for the sum of $120 per month." The bill of particulars claimed for services from April 7, 1900, to December 12, 1900, at $90 per month. When the proofs were all in, plaintiff asked leave to amend his bill of particulars. The judge refused to allow him to do so, and instructed the jury that because of the bill of particulars plaintiff could recover not to exceed $90 per month. The testimony on the part of the plaintiff tended to show a hiring for the season of 1900 at the going wages, and that the going wages for vessels like the Argyle were from $100 to $120 a month. We do not think that there was any such variance as to take any one by surprise, or to mislead them. It is said, as the contract could not be performed within a year, it comes within Comp. Laws, § 9515. In the course of the trial, it was agreed between counsel that the meaning of the words "season of navigation"—the generally accepted meaning—is, and also by custom, that the season of navigation begins on the 1st day of April and ends on the 5th of December. The testimony also discloses

Digitized by Google

that the season closed with the Argyle the year before on the 13th of November, and the contract, if one was made, was made the day thereafter. We think, in view of this record, it cannot be said it was an "agreement that by its terms is not to be performed in one year from the making thereof," within the meaning of the statute. See cases in note to statute. Smalley v. Mitchell, 110 Mich. 650, 68 N. W. 978. It is claimed the testimony does not establish a contract for the season. There was a conflict in the testimony. The jury evidently believed the plaintiff's version of it. If true, it showed a hiring for the season of 1900. It is said the verdict was contrary to the evidence and the charge of the court that it should have been either in favor of defendant or for a much larger sum, and shows that it was a compromise verdict; citing Morley v. Insurance Co., 85 Mich. 210, 48 N. W. 502, and other cases. We do not think the cases cited are controlling. In the Morley Case suit was brought upon an insurance policy. If anything was due, it was the sum of $1,533, and interest for three years. The verdict was but $951.29, showing the jury were not governed by the testimony. In the case at bar it is true Mr. De Land gave testimony tending to show that the going wages were $100 to $120 a month, but it was drawn out on the cross-examination that he acted as master for the same vessel the fall before at $70 a month, while proof was introduced on the part of the defendant that up to the time the plaintiff was discharged he was paid at the rate of $75 a month, and made no claim he was not being paid enough. A computation shows that, after making the proper deductions, the jury computed the wages at $75 a month. Under these circumstances, we do not think it can be said the verdict was not justified by the evidence, nor that the judge abused his discretion in refusing a new trial.

Judgment is affirmed. The other Justices concurred.

NOWLEN v. CITY OF BENTON HARBOR et al.

(Supreme Court of Michigan. Sept. 15, 1903.)

MUNICIPAL IMPROVEMENTS—OBJECTIONS—ESTOPPEL — ASSESSMENTS — CORNER LOTS INCLUDING LOTS IN TWO ASSESSMENT DISTRICTS — ANNUAL ASSESSMENT — RESTRICTIONS—STATUTES — CONSTRUCTION — VALUATION — ASSESSMENT ROLLS — REDUCTION—EQUITY.

1. Where, during the time certain street pavements were being laid abutting complainant's property, complainant knew that the work was being done, and took no steps to prevent the same, and did not object thereto, he was estopped from questioning his liability for a portion of the expense assessed against his property.

2. Where streets on two sides of a corner lot were paved, it was proper to include the same in two assessment districts on the ground that it was benefited by both improvements, and assess it for each, provided no greater burden than that prescribed by statute was imposed.

3. Under Comp. Laws, § 3196, fixing the limit of assessment on real property for municipal improvements at 25 per cent. for one improvement, and section 3295, providing that all assessments shall not exceed 5 per cent. per annum, while lots benefited by two improvements may be included in two assessment districts, the annual tax for both improvements must be restricted to 5 per cent. of the current valuation of the lots as shown by the last preceding assessment rolls.

4. Comp. Laws, § 3196, relating to assessments for municipal improvements, provides that in no case shall the whole amount to be levied by special assessments upon any lot for any one improvement exceed 25 per cent. of the value of such lot as valued and assessed for state and county taxes in the last preceding ward tax roll, and any cost exceeding such per cent. shall be paid from the general fund of the city. *Held*, that the "last preceding ward tax roll" referred to was the last completed roll on which state, county, and school taxes had been spread.

5. Complainant had owned three city lots, which had been valued in the 1900 assessment roll at $2,500. One of the lots was a corner lot, and the other two were adjoining inside lots. Complainant sold one of the inside lots for $1,800, and admitted that the remaining lots were worth $3,000, at which they were assessed in the roll for the year 1901. *Held*, that complainant was not equitably entitled to have an assessment for local improvements based on the valuation of such lots at $1,300 reduced.

Appeal from Circuit Court, Berrien County, in Chancery; Orville W. Coolidge, Judge.

Bill by Albert R. Nowlen against the city of Benton Harbor and another to restrain the collection of a special improvement tax. From a judgment in favor of complainant, defendants appeal. Modified.

The city of Benton Harbor took steps to pave portions of two streets—Wall and Main—which intersected each other at nearly right angles. The complainant owned three lots—Nos. 2 and 3, fronting only on East Main street; No. 1, fronting on East Main and Wall streets—and in the year 1900 they were assessed together as one parcel at $2,500. Subsequently, and before proceedings to pave were taken, lot 3 was sold for $1,800. Separate resolutions were passed by the council on different days, and steps were taken to levy assessments for this work, and separate assessment districts were created by the council for the purpose of levying the cost of the respective improvements. Lots 1 and 2 were included as one parcel in each district, and the work proceeded to completion with the knowledge of complainant. For the purpose special rolls were made, these lots being listed at $3,000, which amount was their assessed value according to a general assessment roll made in the spring of 1901. These special rolls were confirmed in September, 1901, which was before the state, county, and school taxes were

¶ 1. See Municipal Corporations, vol. 36, Cent. Dig. § 1149.

Digitized by Google

spread for that year. The total amount levied against complainant for these improvements was $1,037, which was collectible in five annual payments. The rolls went into the hands of the treasurer for collection in December, 1901. Complainant filed the bill in February, 1902, praying an injunction against the city and its treasurer to prevent the collection of the tax, and to set aside such assessment and all proceedings of the council pertaining to said pavement. On the hearing the prayer was amended to include general relief. It is observable from the foregoing statement that the proceedings imposed a tax for the two pavements of more than 25 per cent. of the value of the premises, and the amount payable each year exceeded 5 per cent. of the valuation actually made. A number of questions were raised at the hearing. (1) To the proceedings generally, by reason of various alleged irregularities; (2) to the including of the premises in two assessment districts; (3) that the valuation was irregular and excessive, and that it should have followed the tax roll for 1900; (4) that the levy was excessive, because only 25 per cent. of the value could be lawfully levied at one time, and only 5 per cent. in one year. The circuit court held the tax excessive, and decreed the special assessment void as to complainant, but without prejudice to a reassessment of the property as provided by law. Neither party was allowed costs, except that the treasurer was given costs against the complainant upon the ground that he was an unnecessary and improper party to the suit. The defendants have appealed.

H. S. Gray (G. M. Valentine, of counsel), for appellant city. A. Plummer and George W. Bridgman, for appellee.

HOOKER, C. J. (after stating the facts). The testimony shows that the three lots had a frontage of 150 feet on East Main street and of 165 feet on Wall street. During the time when these improvements were being made, the paving of Wall street was partially suspended pending negotiations with the complainant for a strip of land from said lots required by the city for the purpose of widening Wall street, and these ended by the payment of upwards of $400 for the same to the complainant, when the work was proceeded with, and finished before December, 1901. The evidence conclusively shows that the complainant knew that this work was being done, and we think that he is estopped from questioning his liability for a portion of the expense, under our repeated decisions which are cited by counsel. It is only necessary, therefore, to discuss such questions as will aid in determining whether he is entitled to a reduction of the tax spread against these premises. The following questions are important in this connection: (1) May a given parcel of land be included in two or more assessment districts? (2) Are the restrictions of 25 and 5 per cent. limitations upon a single improvement only, all improvements of a particular class, or all improvements of all classes? (3) What is to be taken as the basis of valuation for the special assessment?

1. It is obvious that it is impracticable to limit a corner lot to one assessment district, except by the arbitrary method of dividing the lot by some sort of an imaginary line, having one terminus at the corner of the lot where the streets intersect and the other at such place as the counsel shall designate, and it is apparent that the entire premises used as a parcel fronting on both streets share in the benefit to be derived from the use of the improvement upon either street, be it sewer, pavement, or any of the utilities, such as water or gas. When the benefits are apportioned by frontage, the total cost of the two improvements would fall upon the entire parcel, whichever method might be adopted, unless it be where there is such a disparity of cost that a levy of the assessments separately might exceed the statutory limit upon one parcel, and fall below it on the other. We are of the opinion that it was competent for the counsel to say that this entire parcel was benefited by both improvements, and to assess it for each, provided it did not impose a greater burden than the statute permits; and it follows that the land may be in two assessing districts. We understand that the case of Boehme v. City of Monroe, 106 Mich. 401, 64 N. W. 204, does not hold to the contrary.

2. It is urged that a given parcel cannot be assessed for more than 25 per cent. of its valuation in the aggregate, or more than 5 per cent. in one year, for improvements. And it is plausibly urged that, if it were otherwise, it might be assessed for more than its value. On the other hand, counsel for the defendant contend that these limitations apply to a single improvement. The statute pointedly refers to "any one improvement." See Comp. Laws, § 3196. We have held that Comp. Laws, §§ 3196 and 3295, should be construed together, and that the former fixes a limit of 25 per cent. for one improvement, and the latter a limit of 5 per cent. per annum for all assessments. See Corliss v. Highland, 93 N. W. 254. While the lots may be in two assessment districts, the annual tax for both improvements must be restricted to 5 per cent. of the current valuation as shown by the last preceding rolls.

3. Is the valuation excessive? Section 3196 is as follows: "In no case shall the whole amount to be levied by special assessment upon any lot or premises for any one improvement, exceed twenty-five per cent of the value of such lot or land, as valued and assessed for state and county taxation in the last preceding ward tax roll; any cost exceeding that per cent which would otherwise be chargeable on such lot or premises shall

Digitized by Google

be paid from the general funds of the city." What is meant by the "last preceding ward tax roll"? Counsel for the complainant contend that it must refer to the last roll of the ward upon which the taxes for state, county, and school purposes have been spread, while counsel for the defendant maintain that a ward roll which has passed the board of review, and is therefore fixed, so far as to become the unalterable assessment upon which state, county, and school taxes must be spread, is within the language of this statute. We incline to the opinion that the statute was intended to refer to the assessment contained in the last general roll, and by this is meant a completed roll upon which state, county, and school taxes have been spread. In both sections—3196 and 3295—the term "last preceding [tax or assessment] roll" is used. In the latter case it is quite clear that it does not mean the roll of the current year, although the term "assessment roll" is used, for, if so, what is meant by the words "last preceding"? In the former, the term "tax roll" is used, and the roll referred to is called in the act the "December tax roll." Section 3318. Had the lots 1 and 2 been assessed as one parcel on the December, 1900, roll, we should have little difficulty in determining the amount that complainant should pay upon this tax. But they were not. Lot 3 was included with them, and all were assessed at $2,500. Complainant's counsel suggest an apportionment of the tax of 1900 according to superficial area. Upon this basis this property would be valued at $1,361. But while these two lots had a front of 165 feet on Wall street and 100 on Main, lot 3 has a front of only 50 feet on Main street, and no front on Wall. Moreover, the complainant has sold lot 3 for $1,800. The law does not require the adoption of this method. Neither does it expressly authorize the council to make a new assessment. What the council apparently did, was to take the assessment roll of 1901, in which the property was assessed at $3,000, as a basis. Moreover, the complainant admits that the lots are worth $3,000. Yet he asks that they be assessed at about one-third of that price, while presumably his neighbors are assessed at a much higher rate. This is not equity. He is before us asking equity, and that he be relieved from an excessive assessment. If he is to be relieved, it must be upon the basis of what is equitable. We are of the opinion that the taxes chargeable against him on each of the two assessments should not exceed $725, of which the defendants should collect not exceeding one-fifth of $725 upon this roll, that being 5 per cent. of $3,000.

The decree will be modified in accordance with this opinion. Complainant will recover costs of the circuit court against the city, and the defendant city will recover costs of this court against him. No costs for or against the treasurer will be allowed. The other Justices concurred.

STRACK v. MILLER.

(Supreme Court of Michigan. Sept.

DRAINS — PROCEEDINGS TO WIDEN — TION—ADEQUATE REMEDY AT L

1. Comp. Laws, § 4320, provides t petition to the drain commissioner widening of a drain, he shall examine and determine whether it is necessary ducive to the public health, etc., an preliminary order locating the ditch, to the probate court for the appointme cial commissioners or a jury. Sectio quires the court to examine the pr and requires notices of the time and hearing. Section 4325 authorizes all p terested to be heard. Section 4345 pr an appeal, and section 4346 for a revi proceedings by certiorari. *Held*, that tions provided an adequate remedy to all questions of jurisdiction and ir and hence a bill to restrain the drai sioner from laying out or constructin on complainant's land, failing to a any act of trespass had been com threatened, or that the commissioner more than examine the proposed imp and make his preliminary order, wa tainable.

Appeal from Circuit Court, Mon ty, in Chancery; Harry A. Lockwoo

Suit by William Strack against Miller. From a decree in favor of ant, defendant appeals. Reversed.

Willis Baldwin, for appellant. day, for appellee.

MOORE, J. The bill was filed in to enjoin defendant from laying out structing a new drain on com lands, on the ground that the peti him no jurisdiction to act because ute (chapter 3, § 1, of the drain amended in St. 1899 (Pub. Laws 189 No. 272), requires five of the ten f who signed the application to be land liable to an assessment for b the construction of said drain, w four of the signers were so liable cause there was no drain or water the land of complainant, where was seeking to lay one out. Def his answer claims the petition aske deepen and widen an existing d was governed by section 4379, Co which requires for the deepening a ing of an existing drain that the need be signed by only five freeho or more of whom shall be owner liable to an assessment for benef cleaning out, and that four of th were so liable. Defendant further in his answer that at the time the across the lands of complainant an laid out and established in 1876, by drain commissioner, which was the proposed to deepen and widen. Th also contained a demurrer to the b following reasons: (1) Because the not state a cause of action. (2) Be probate court was the forum to

Digitized by Google

complainant's damages, if any. (3) Because, if complainant suffered damage, the same should be ascertained in the statutory method. (4) Because the commissioner had not made his final order upon the drain, nor in any way signified his intention of entering complainant's premises. The court heard the case upon the merits, and found from the evidence that no drain and no natural watercourse existed across complainant's land on the line described in the petition under which the commissioner was acting, and, as five or more of the petitioners did not own land liable to an assessment for benefits, he was acting without authority, and a decree was granted as asked for by the complainant. From this decree defendant has appealed.

We think the disposition of one question should dispose of the case, and that question is, should the chancery court take jurisdiction under the facts disclosed by the record? All that had been done by the drain commissioner when the bill was filed was to receive a petition asking for the deepening and widening of a drain, after which he examined the proposed improvement, and made his first order of determination, as provided by section 4320, Comp. Laws. The bill does not allege, nor the proofs show, he had committed or threatened any act of trespass. Doubtless his next step would have been to make application to the probate court for the appointment of special commissioners or a jury. Section 4323, Comp. Laws, requires the court to make an examination of the proceedings and of their regularity, and requires notices to be given of the time and place of hearing. Section 4325, Comp. Laws, provides that all persons interested shall be heard, and allows certain amendments to be made, if the application to establish the drain is shown to be sufficient under the statute. Section 4345 provides for an appeal, and section 4346 provides for a review of the proceedings upon certiorari. The purpose of the statute undoubtedly is to give an opportunity to have a speedy hearing upon any question of jurisdiction or any question of irregularity. If the complainant had shown to the probate court that the application was fatally defective, the proceeding could have then been ended. The same result could have been reached before a board of review. This could have been accomplished without so much delay and expense as is involved in a chancery proceeding. This court has repeatedly construed the provision of section 4346, which provides for a review of these proceedings upon certiorari. See Whiteford Township v. Probate Judge, 53 Mich. 130, 18 N. W. 593; Bettis v. Probate Judge, 54 Mich. 608, 20 N. W. 608; Campau v. Drain Commissioner, 105 Mich. 422, 63 N. W. 435; Brady v. Hayward, 114 Mich. 326, 72 N. W. 233; Swan Creek et al. v. Brown, Supervisor (Mich.) 90 N. W. 38. No such case was stated in the bill of complaint or shown by the proofs as to call for the interposition of a court of equity.

Decree is reversed, and bill of complaint dismissed. The other Justices concurred.

LEMON v. McBRIDE.

(Supreme Court of Michigan. Sept. 15, 1903.)

TROVER AND CONVERSION — MORTGAGES — FORECLOSURE — ISSUES — QUESTIONS FOR JURY—EVIDENCE — WITNESSES — CROSS-EXAMINATION.

1. Plaintiff mortgaged to defendant certain tools, and in trover for the conversion claimed that before sale on foreclosure defendant agreed to take charge of the tools, and that plaintiff should be entitled to a year to redeem the same; but a tender of such amount within the time was refused. Defendant claimed that the mortgage was foreclosed, and that he became the purchaser at the sale; that the tools were not worth more than the amount of the debt; that before the alleged tender he offered to resell the tools to plaintiff for $25, which plaintiff declined; and that thereafter defendant sold some of the tools to others, and for that reason could not deliver them when plaintiff made his tender, which defendant claimed was not sufficient. *Held*, that it was error to withdraw from the jury all the issues in the case except the question of damages plaintiff was entitled to recover.

2. Where, in trover for the value of tools, plaintiff in his own behalf testified that the tools were worth $185, defendant was entitled to have plaintiff identify certain of the tools shown him on cross-examination, and to ask him what value he placed on such tools.

3. Where, in an action for conversion of certain tools, plaintiff claimed that defendant held them under a chattel mortgage and agreement that plaintiff might redeem them within a year, and that plaintiff had tendered the amount due within the time, while defendant claimed that he had purchased the tools on foreclosure of the mortgage, defendant was entitled to show that plaintiff negotiated for a purchase of the tools, and that defendant offered to take $25 for them after the alleged foreclosure, and before the alleged tender, as bearing on the value of the tools, and on the truth of plaintiff's claim that the mortgage was not foreclosed, and that the time for payment of the debt had been extended.

Error to Circuit Court, Shiawassee County; Stearns F. Smith, Judge.

Action by Joseph N. Lemon against James McBride. From a judgment in favor of plaintiff, defendant brings error. Reversed.

Albert L. Chandler, for appellant. John T. McCurdy, for appellee.

MOORE, J. This is an action of trover commenced in justice court, and afterwards appealed to the circuit court, where plaintiff obtained judgment. There are upwards of 70 assignments of error. The plaintiff was at one time the owner of a quantity of blacksmith tools, upon which he gave to the defendant a chattel mortgage in the sum of $27. Foreclosure proceedings were commenced, and it is the claim of plaintiff that before sale he arranged with the defendant that the latter might take charge of the tools, and the plaintiff was to have a year therefrom in which to pay the amount due upon the mort-

Digitized by Google

gage; that before the year was up, he tendered the amount due, which tender was refused. It was the claim of the defendant that the chattel mortgage was foreclosed; that he became the purchaser; that plaintiff acquiesced in the sale; that the tools were not worth to exceed the amount of the debt; that before the alleged tender he had offered to sell the tools back to the plaintiff for $25; that plaintiff declined this offer, and after he had done so, defendant sold some of the tools to other persons, and for that reason could not let plaintiff have them when he made his tender. He also claimed that, upon plaintiff's own theory, the alleged tender was not sufficient, as it included nothing for the expenses of caring for the tools.

The judge charged the jury the only question for them was the measure of damages. In this we think he erred, in view of the claim of defendant. The plaintiff was sworn on his own behalf, and testified the tools were worth $185. On the cross-examination counsel sought to have the plaintiff identify certain tools which were shown him, and to learn from him what value he placed on those tools; claiming they were part of the tools taken by defendant. He was not allowed to do so. We think this was proper cross-examination, and should have been allowed. The defendant also sought to show that through the agency of his sister, plaintiff negotiated for a purchase of the tools, and that defendant offered to take $25 for them, and that this occurred after the alleged foreclosure, and before the alleged tender. We think this was competent testimony as bearing, not only upon the value of the tools, but upon the truth of the claim of plaintiff that the mortgage was not foreclosed, and that the time of payment had been extended in his favor for a year.

The questions involved in the case are simple, but for some reason a good deal of friction was developed between counsel, and between the court and counsel, which it would seem might be avoided.

We do not deem it necessary to refer further to the other assignments of error. They are either not well taken, or are such as will not occur again.

Judgment is reversed, and new trial ordered. The other Justices concurred.

SANITAS NUT FOOD CO., Limited, v. CEMER.

(Supreme Court of Michigan. Sept. 15, 1903.)

MASTER AND SERVANT—TRADE SECRETS—DISCLOSURE—INJUNCTION—PARTIES.

1. Where defendant in the course of his employment by complainant had learned certain trade secrets concerning the manufacture of complainant's product, complainant was entitled to maintain a bill to restrain him from divulging such secrets to plaintiff's competitors, without joining such competitors as parties.

Appeal from Circuit Court, Calhoun County, in Chancery; Herbert E. Winsor, Judge.

Bill by the Sanitas Nut Food Company, Limited, against John Cemer. From a decree against defendant Cemer, he appeals. Affirmed.

Walter S. Powers, for appellant. Mechem & Bailey and Dallas Boudeman, for appellee.

HOOKER, C. J. The complainant filed a bill against defendant and several other persons to restrain the former from practicing, or divulging to the latter or to others, certain secret arts and processes, knowledge of which was acquired by him through his employment by complainant, and the latter from profiting therefrom by using the same. The bill was voluntarily dismissed as to all but defendant Cemer, and upon a hearing a decree was made in favor of the complainant against him.

The question is one mainly of fact, and in our opinion, the testimony warrants the decree rendered by the circuit judge. The case is ruled by Thum Co. v. Tloczynski, 114 Mich. 149, 72 N. W. 140, 38 L. R. A. 200, 68 Am. St. Rep. 469. It is asserted that the dismissal of the bill as to other defendants left complainant without a cause for relief against Cemer under the bill, but we think otherwise. The bill would lie against Cemer alone, and contains allegations sufficient for the purpose.

It is also urged that the decree is vague and uncertain, but we think it as specific as the nature of the case will permit.

The decree is affirmed, with costs. The other Justices concurred.

RANDA v. DETROIT SCREW WORKS.

(Supreme Court of Michigan. Sept. 15, 1903.)

MASTER AND SERVANT—INJURIES TO SERVANT—SELECTION OF APPLIANCES—FELLOW SERVANTS—ASSUMPTION OF RISK.

1. Defendant maintained in its factory two machines for running emery wheels, geared to different speeds, and provided wheels of different sizes to be used on the two machines; it being dangerous to use a small wheel on the machine having the higher gear. Defendant's operatives used their own judgment in the selection and use of the wheels, and plaintiff was as well qualified to make the selection as any other person on the premises. On the date of the accident, the foreman directed the workmen to put a small wheel on the higher geared machine, and directed plaintiff to grind a saw on it, which he proceeded to do, when he was injured by the bursting of the wheel. *Held*, that the duty of selecting and using the wheels was not a duty of the master, and hence plaintiff assumed the risk of using them, whether put on by himself or a fellow servant.

2. Where the selecting of an emery wheel and placing it on a grinding machine was a duty not devolving on the master, and was usually performed by employés, the master's superintendent, in ordering a small wheel placed on a machine geared to a speed which rendered the

---

¶ 1. See Injunction, vol. 27, Cent. Dig. §§ 110, 211, 212.

use of such wheel unsafe, acted as a fellow servant of an employé who was injured by the bursting of the wheel, and not as a vice principal.

Error to Circuit Court, Wayne County; William L. Carpenter, Judge.

Action by Joseph Randa against the Detroit Screw Works. From a judgment in favor of plaintiff, defendant brings error. Reversed.

Orla B. Taylor, for appellant. Charles C. Stewart and M. M. Nesbitt, for appellee.

HOOKER, C. J. The plaintiff recovered a verdict and judgment for $800 for the loss of an eye through the bursting of an emery wheel at which he was at work in the defendant's factory. There is little dispute upon the facts. Defendant had two machines for running emery wheels for grinding purposes, one geared to a speed of 2,000 revolutions per minute, the other geared to a speed of 5,000 revolutions per minute. Caswell, who was the foreman, under Taylor, who was the superintendent in charge of the factory, as superintendent for the defendant directed a workman to put a six-inch wheel upon the latter machine, and when this was done, asked plaintiff to grind a saw upon it, which he proceeded to do. The evidence tends to show that it was negligent to use a six-inch wheel at that speed, and such wheel was not used upon that machine.

The defendant's counsel claim that the court erred in refusing to direct a verdict for defendant, upon the grounds, first, that Caswell was a fellow servant, and, second, that the defendant assumed the risk, and was guilty of contributory negligence, and these are the only questions in the case.

The case is resolved into two questions: (1) Was the negligence of the superintendent in directing that the six-inch wheel be put upon the machine, the act of the master or of a fellow servant? (2) Did the plaintiff assume the risk of its use? At the trial the court was in doubt whether the case should not be taken from the jury, in accordance with defendant's request, but it was not then convenient to have the question argued, and it was decided to submit the case to the jury, with the understanding that if, upon a motion for new trial, he should decide that he ought to have directed a verdict for the defendant, he might then do so. Before the motion could be made and argued, he left the bench, and there was therefore no opportunity to consider the question. The evidence shows that there were two of these machines for use with emery wheels of various sizes, which were kept on hand, accessible to the men who used them, and who selected and put on the proper wheel whenever called upon to use one of them. The wheels hung upon a post, near the machines, when not in use. The machines were substantially alike, except in regard to the velocity, which differed. The plaintiff had been in defendant's employ for two years. His business had been to keep the machinery in repair. He was entirely familiar with these machines, had used both, and had put emery wheels upon them every time he used them, and was keeping wheels on the other machine in shape for some boys at the time. He claims that he never put a six-inch wheel upon that machine before, or saw one put on; that while he never saw a six-inch wheel burst, he said that he had read, and most everybody knew, that emery wheels would burst if run at too great velocity. He saw this wheel put on that day. He knew it was unusual. He knew that this machine ran much faster than the other. Nevertheless, it is claimed that he was ignorant of the impropriety or danger (if there was such) in using that wheel upon that machine. It is not for us to express doubts whether it was hazardous to use a six-inch wheel on this machine, in view of the fact that different sized wheels were kept for use upon these machines, according to the work to be done; but it seems unquestionable that the operatives used their own judgment in the selection and use of the wheels, and that this plaintiff was as well qualified to do this understandingly as any person about the premises. We think it was not the duty of the master to be present on all occasions, in person or by his representative, and superintend the selection or change of wheels. As well might it be said that he must select the chisels or augers to be used in mortising or boring machines, or the saws to be put upon a saw arbor. These things must be left to the operative, and each one assumes the risk of using them, whether put on by himself or a fellow servant, or found in place when he uses the machine. This being so, it becomes necessary to plaintiff's recovery to hold that Caswell, the foreman, was the representative of the master in ordering this wheel put on the machine. We have often held that the question whether one is a fellow servant or not depends upon the nature of the act. If it is one which it is the duty of the master to do, like keeping a machine in repair, the master is responsible for injuries resulting from negligence therein. If it is one usually performed by the employés, and the master has no duty in the premises, it is the act of a fellow servant. We are of the opinion that this was the act of a fellow servant, and that the plaintiff cannot recover.

The judgment is reversed, with costs of both courts, there being no occasion for a new trial.

CARPENTER, J., did not sit. The other Justices concurred.

Digitized by Google

BURBANKS v. LEPOVSKY et al.

(Supreme Court of Michigan. Sept. 15, 1903.)

FALSE IMPRISONMENT—EVIDENCE—TRUTH OF FACTS—QUESTION FOR JURY—DEFENDANT'S GOOD FAITH—ADVICE OF COUNSEL—PROBABLE CAUSE—DISAGREEMENT OF JURY.

1. Defendants employed plaintiff to effect insurance on their goods, and a short time after having removed the same to another city requested plaintiff to cancel the policy and issue a new one on the goods in the new location. For this purpose plaintiff wrote a receipt for the unearned premium on the old policy, which he signed in defendant's firm name, and sent it to the insurance company with the canceled policy, and directed the issuance of a new policy. A day or two later defendants called for the policies, and, on being told that they had not arrived, had plaintiff arrested for forging the receipt. The trial resulted in a disagreement of the jury, after which the case was nolled. In an action for false imprisonment defendants introduced as their only witness the county attorney, who had charge of the forgery prosecution, whose testimony failed to show that the defendants stated all the facts to him, and on cross-examination he admitted that many circumstances which defendants must have known were not stated to him, and that he would not have advised the prosecution if they had been. *Held* that, inasmuch as plaintiff's testimony tended to prove the truth of such facts, whether they were true or not was a question for the jury.

2. Where in an action for false imprisonment there was evidence that defendants had made threats that they would "hang plaintiff higher than the Jews hung Christ"; that he would "see him in Jackson, or spend a thousand dollars to see him there"; and that they had too much money for plaintiff to law them; they would outwind him, and would law him until he could not follow them; that they had a thousand dollars they would spend to send him over the road—plaintiff was entitled to go to the jury on the question of defendant's belief in plaintiff's guilt.

3. In an action for false imprisonment, advice of counsel is no defense to a person not acting in good faith.

4. In an action for false imprisonment the fact that plaintiff was required to appear at the circuit court, where the jury disagreed, after which the case was nolled, is not conclusive on the subject of probable cause.

Error to Circuit Court, Sanilac County; Watson Beach, Judge.

Action by Frank E. Burbanks against David Lepovsky and another for false imprisonment. From a judgment in favor of defendants, plaintiff brings error. Reversed.

Wilford Macklem, for appellant. W. H. Burgess, for appellees.

HOOKER, C. J. The testimony in this cause shows that the plaintiff was an insurance agent, and insured the defendants against loss by fire in the sum of $1,000 upon their stock of merchandise at Bad Axe. The premium was $55, $20 of which was paid in cash and the remainder was applied upon an account due them from the plaintiff. There was an understanding that the defendants expected to soon move their stock to Minden City, and it was agreed that in that event the plaintiff should cancel the policy pr and issue new insurance to cover the in its new location. A short time after the defendants removed to Minden, a policy was sent to the plaintiff, with quest that he cancel it, and issue a ne icy for $3,500 in the Imperial Insuranc pany. Plaintiff testified that David Le had authorized him to do what was sary to accomplish the readjustment insurance. Accordingly he wrote a for the unearned premium, and sign Lepovsky firm name to it, and sent it company with the first policy. He al daily reports to three companies, which was the Imperial, showing the the defendants of policies amounting 500. He testified that he afterward David Lepovsky, and told him what done, and that he seemed satisfied; b a day or two later he called upon him policies, and plaintiff told him that not heard from the companies yet, but in a day or two, and he would then them. Lepovsky replied that he woul them that day or never. He never r them. Subsequently he made co against the plaintiff for forgery of the mentioned. A warrant was issued, a plaintiff was arrested, bound over, an at the circuit, whereupon, after a di ment of the jury, the case was nolle p Subsequently this action was begun f imprisonment, and upon trial the court ed a verdict for the defendant, and th tiff has brought error.

In addition to the facts already stat plaintiff produced testimony that one defendants had stated to a bank cashi he "had Burbanks fast," and that he hang Burbanks higher than the Jew Christ"; that the other defendant ha shortly after Burbanks' arrest that "he see him in Jackson, or spend a thousa lars to see him there." David Lepovsk ed and allowed to be published a sta that the case against Burbanks ha brought on, he had pleaded guilty, a held to the circuit court. One Yakes talk with both defendants about this such publication, and advised caution publishing it. The younger Lepovsky stated that "he did not care for that had too much money for Burbanks them; they would outwind him; they law him until he could not follow the had a thousand dollars they would sp it was necessary, to send Burbanks o road." The sheriff testified that on t of the examination after plaintiff was over he heard one of the defendants s "he was going to send him over the and that he seemed very glad and e The defendants were not sworn, but the prosecuting attorney, who testifie one Cox, an insurance agent, and Le came to see him about the charge Burbanks, and made a statement of

¶ 3. See False Imprisonment, vol. 23, Cent. Dig. § 78.

Digitized by Google

tails, showed him the receipt, and some letters. He could not give the conversations verbatim, but he had two or three talks about it, and he knew a good deal about it besides what he got from them, and that he directed the defendant David to make the complaint. When asked whether defendant stated any conversation about the return premium, he said: "That matter was talked over, I remember; but I can't remember the exact conversation now, but perhaps you can draw my attention to it; but I can't give it now, I don't believe. I can say this: that there was nothing developed in the testimony, either before the justice or on the trial, that was new to me. I conducted the examination as prosecutor before the justice and the trial before this court. My recollection is now—but I am not positive—that I went to Minden, talked with the boys, and made an investigation before the papers were issued. Q. What did you advise Mr. David Lepovsky to do in the matter? A. If that assumes I went, I wouldn't want to answer; but I will say this: After I made the investigation, I did advise Mr. Lepovsky to make that complaint. I think Mr. Dawson came into my office and did the writing in the complaint and warrant, and I dictated it. I had charge of the case from the making of that complaint to the termination of the case. The various steps were taken under the direction of the sheriff and myself. I always consulted with him in all those matters, and we acted together. My impression is that the adjournments before the justice were made by agreement, and arranged at such times as would be satisfactory to the people's witnesses and the defendant's attorney and myself and the sheriff. I understood this man Cox to be an agent or an employé of the company to which that receipt purported to have been given. I talked with Mr. Cox fully on the matter, and learned all he claimed to know about it. There were some letters from Mr. Burbanks, and I think there was what purported to be either press copies or typewritten copies of letters they had written to him. I saw quite a number of letters. I haven't any of the letters; they were returned. Q. Whether or not David Lepovsky informed you before the complaint was made that he did not sign the receipt that was claimed to have been forged? A. He did tell me that he didn't sign it. Q. And the receipt he had at that time in your presence? A. I am not going to say that—whether it was from him or Cox; but I had it before the warrant was made. I am positive that Mr. Lepovsky saw that receipt in my hands, whether be brought it, or Cox brought it, before the warrant was made; and denied the signature. In fact, I was somewhat familiar with Mr. Lepovsky's handwriting. He had written to me in regards to some matters as I remember it, and I had seen some of his handwriting and I had seen some of Mr. Burbanks' handwriting, and it was not Mr. Lepovsky's, I didn't think. Q. Whether or not at that time he told you that he had not authorized Burbanks to sign the name Alex Lepovsky & Co.? A. He told me that he did not authorize it. Q. Whether the young man told you the same thing? A. He did." Witness stated under objection of plaintiff that "Cox related to me a conversation he had with Burbanks at Minden." "Mr. Lepovsky told me all about moving his goods from Bad Axe to Minden, and how he came to require this insurance. I knew all about it anyhow." This is the substance of his direct examination. On cross-examination he testified: "Mr. David Lepovsky was the man that furnished me all the information as to what occurred between him and Mr. Burbanks, and I relied on what he told me. Q. Did you base your action on what he stated to you as to what occurred between him and Burbanks? A. I didn't divide the case. I took together what I got from all. Q. I ask you whether you had any other source of information as to what occurred personally as to conversations between Lepovsky and Burbanks, other than Lepovsky? A. I answered you twice. I said, only so far as they were corroborated by other circumstances and other things. Q. What other information did you have that you undertake to say corroborated? A. What I got of Mr. Cox, and what I got from the younger Lepovsky, and the letters, and all the information together. Q. Did Mr. Cox claim that he was at Minden at any time, and heard any conversation between Mr. Lepovsky and Mr. Burbanks? A. I can't say that he did. Mr. Lepovsky did not tell me that he had requested Mr. Burbanks to cancel that policy, and apply the proceeds on any other insurance; nor did he tell me that he had authorized Mr. Burbanks to take any step necessary to cancel the policy. Q. If he had told you that he had authorized Mr. Burbanks to cancel that policy, and take the money and apply it on other insurance for him, and that Mr. Burbanks had written other insurance and applied on other and different policies for him, would you have ordered the prosecution? A. I don't think so. Q. Did Mr. Lepovsky tell you that he had got angry because Mr. Burbanks did not deliver the policies to him when he asked for them? A. No; he did not tell me anything of any conversation that occurred up there at his place. As I heard since, there was nothing of that at all. Q. Did Mr. Lepovsky tell you that he had authorized Mr. Burbanks to sign that receipt? A. No, sir; I told you he didn't. Q. Had he told you that he had authorized Mr. Burbanks to sign that receipt, would you have ordered the prosecution? A. No, sir; decidedly not. No matter what the rest of it was, he wouldn't have got any complaint or warrant if he had told me that. Q. And if he had told you he had authorized him to take any steps necessary to draw that money and get it and apply it on other insurance, would you have ordered it then? A. No; I

Digitized by Google

should consider that he told Burbanks to do whatever Burbanks thought was necessary to do, and whatever Burbanks done was authorized. Q. If he had told you that he was pushing the matter for personal spite, and was only doing it for personal malice, would you have ordered a complaint? A. No. If I thought it was personal spite, I wouldn't permit a prosecution anyhow for personal matters. Q. You stated that you thought you went up there and consulted the boys? A. I know I talked with Lepovsky's two boys, but I said then, and I say now, that I am not sure whether it was before the complaint was made or whether it was after the arrest and before the examination. I would not be positive about that. Q. If you had known, or if Mr. Lepovsky had told you, that when he gave the policy to Mr. Burbanks to be canceled, or had it brought to Mr. Burbanks, he ordered him to write him up thirty-five hundred dollars other insurance, and to apply the money, would you have ordered a prosecution? A. That is the question you asked me before, practically. I wouldn't decide on that alone. I don't think I would have decided on that alone. Q. Did he so tell you? A. No, he did not. Q. You said in your redirect, to Mr. Burgess, that he told you about moving his goods from Bad Axe. Did he tell you also about his ordering thirty-five hundred dollars insurance of Mr. Burbanks? A. My impression is that it wasn't spoken of the first time, but when we learned that would enter in, he told me he had not ordered it. My impression is he didn't tell me at first because we didn't know what the defense would be, but when that was put up for a defense he told me he hadn't. Mr. Gates: We object to that, and ask that it be stricken out. The Court: I suppose the term 'put up' is not used in an offensive sense? Witness: Did I use the words 'put up'? I will withdraw that, and substitute the words 'defense put forward.' Q. He didn't tell you about the thirty-five hundred dollars of insurance? A. I understand I first learned of that from the defense. Q. He denied that to you? A. That was always denied by both of them; that is, if you are speaking of the insurance that Mr. Burbanks claimed he put up for them on their order. Q. I will repeat my question. I ask you again, if in any conversation Mr. Lepovsky, either David or Alexander, stated to you that they, or either of them, had ordered thirty-five hundred dollars of insurance through Mr. Burbanks, on their goods, after coming to Minden City? A. If that is the thirty-five hundred dollars insurance mentioned by Burbanks as being ordered by them to pay that return premium, then that was never mentioned by me to them. If it refers to the insurance that he had upon his goods there, I am inclined to think that at some time in that transaction I did learn that there was some insurance ordered upon the goods there at Minden City after they came there, of Mr. Burbanks by Mr. Lepovsky. Just the amount of it not remember." This was all of defen testimony. The plaintiff had already the court proceedings both before the and at circuit.

If the evidence adduced by the plai true, it is manifest that he was not gu forgery, and that the defendants had son for believing that he was. Whi testimony offered by the defendant f show conclusively that he stated all facts to the prosecuting attorney, on examination that officer admitted that circumstances which the defendants have known, if true, were not stated t and that he would not have advised a cution if they had been. Whether they true or not was a question of fact f jury, inasmuch as plaintiff's testimony ed to prove them. Again, there is pr this record which entitled the plaintiff to the jury on the question of defen belief in plaintiff's guilt. The following are in point on these questions: Ha Woodford, 98 Mich. 149, 57 N. W. 96, holds that advice by counsel does not one who acts in bad faith. See auth cited therein; also Bennett v. Edd Mich. 309, 79 N. W. 481; Rankin v. Cra Mich. 9, 61 N. W. 1007.

The fact that plaintiff was required pear at circuit court, where a jury fa acquit him, is not conclusive on the s of probable cause. See Fine v. Navar Mich. 94, 62 N. W. 142; Pawlowski v. 115 Mich. 275, 73 N. W. 238.

Counsel contend that the disagreem the jury and subsequent nolle pros. do tablish prima facie want of probable That might be conceded, and, further prima facie it showed probable caus the case should have gone to the jur the question, because plaintiff's testim believed, was sufficient to overcome prima facie case, and establish the w probable cause.

The judgment is reversed, and a ne ordered. The other Justices concurred

---

CLAY v. LAYTON et al.

(Supreme Court of Michigan. Sept. 15,

GIFTS—DELIVERY—TRUSTS—CREATION—
—WILLS—PAROL EVIDENCE—ADMINIS
TORS—CLAIMS—CONSIDERATION.

1. Where decedent in his lifetime e checks, deeds, and assignments to certa sons whom he desired to make beneficia his estate after his death, and deposit same in separate envelopes in a tin bo directions that they be given to such be ries after his death, and he died with pers still in his possession, the transfer not be enforced as gifts for want of a ery.

2. Decedent, prior to his death, made eral packages containing deeds, assig checks, etc., to be delivered to various be ries at his death, the names of each being

¶ 1. See Gifts, vol. 24, Cent. Dig. § 33.

Google

written upon or inclosed in each package. In the first package he directed that, in addition to the inclosed, he had made checks for certain amounts, to be delivered to the payee by whomsoever the papers were delivered "on his death." In the fourth package he directed the checks inclosed to be delivered to the beneficiary in case of his death, and in another he directed the contents of the envelope to be directed to the beneficiary "in lieu of anything in my will." In two instances payments having been made on mortgages assigned, decedent executed checks for the amount of such payment to the beneficiary, and inclosed the same in the package containing the mortgage to be given to the beneficiary at his death. *Held*, that such facts did not show an intention by decedent to divest himself of the equitable title to the property during his life, and hence he did not hold the same in trust for the beneficiaries named.

3. Where deeds and assignments were executed by decedent in his lifetime to persons to whom he desired the property to pass, and such instruments, which were unambiguous, were held by decedent during his lifetime, and were directed to be delivered after his death, parol evidence was not admissible to show that decedent intended such instruments to operate as a will.

4. Where decedent, in a letter directed to the person to whom he committed his affairs after his death, stated that whatever he left to his housekeeper was his voluntary act; that she had been faithful and honest, and that he had been more dependent on her than any other person on earth; and just prior to his death he delivered to her certain securities and a check for $500—the check was based on a sufficient consideration, and was collectible against his estate.

Appeal from Circuit Court, Lenawee County, in Chancery; Guy M. Chester, Judge.

Action by Frank W. Clay, as administrator of the estate of Abel Whitney, deceased, against Sarah Layton and others. From a judgment in favor of certain defendants, Sarah Kline Frary appeals. Reversed.

Abel Whitney, a wealthy widower, died at Adrian October 18, 1899, leaving no descendants. His heirs consisted of Sarah Layton, a sister, of Wapakoneta, Ohio, and numerous nephews and nieces residing in Michigan and elsewhere. Soon after Abel Whitney's death, the complainant was appointed administrator of his estate, upon the petition of Josephine Harris, a niece of the deceased, and he qualified in due form. The bill alleges that Abel Whitney said to the complainant on several occasions that he had made distribution of his property as he wanted it distributed, and that he wanted it turned over to the several parties entitled thereto, by the complainant; and that Mrs. Freitag, his housekeeper, had been instructed to hand complainant the keys to a certain cupboard, standing in his library, when he should die, and that he wished complainant to open it, where he would find a tin box locked with a padlock, the key to which was in the pocket of the vest he then wore. It alleges further that after the death of Abel Whitney all transpired as he had stated. Upon opening the box complainant found sundry large envelopes, which, for convenience, he marked from numbers 1 to 17, inclusive. He also found three other envelopes, directed to himself, which he has marked "A," "B," and "C."

Memoranda upon and contents of envelope No. 1 were as follows: Indorsed: "Deed of the Masonic Temple property to various persons in lieu of anything in my will. A. Whitney." "Two-sevenths, Sarah Whitney Layton." "One-seventh, Fanny Berdan." "One-seventh, Dwight A. Whitney." "Two-sevenths, children of Mrs. Stevens." "One-seventh, Mrs. Ida Kline Frary." Inside: Warranty deed, dated March 9, 1897, from Abel Whitney to Sarah A. Kline Frary, one-seventh, Helen Stevens Rhodes one-seventh, and Edgar Stevens one-seventh, Fanny W. Berdan one-seventh, and Dwight Whitney one-seventh, and Sarah W. Layton two-sevenths of the undivided one-fourth part of the Masonic Temple in Adrian. Also the following memoranda: "In addition to the enclosed, I want each one named in it to have the following sums in money, and I have made checks for the amounts to be delivered to them at my death: Sarah A. Kline Frary, $200. Helen Stevens Rhodes, widow, $200. Edgar Stevens, brother of Helen, both of Delphos, Ohio, or near there, $200. Fanny Whitney Berdan, of Detroit, $200. Dwight Whitney, her brother, of Detroit, $200. Sarah Whitney Layton, of Wapakaneta, Ohio, $400." Underneath said memoranda is written in the handwriting of said Whitney: "Mr. Clay, or whosoever has these papers, deliver them to the parties on my death, checks and also deed. Abel Whitney." Wrapped in the memoranda were checks upon his banker, drawn by Abel Whitney to the respective persons named, for the several sums indicated.

No. 2. A similar indorsement as to Amelia H. Miller. Contents, a deed and a check.

No. 3. Appropriately indorsed, contained a deed to Frank W. Clay (complainant) and Rial Clay of real estate, in trust for certain minors named therein.

No. 4. Indorsement: "This is to be handed to the officers of the Oakwood Cemetery Association in case of my death." On the inside of said envelope was the following memoranda: "The enclosed check for $200 is a bequest to the Oakwood Cemetery Association for the care of my lots in said cemetery, numbers 13, 14, and 15, block 2, I think. [Signed] April 9th, 1897. Abel Whitney." On the inside of said envelope were found two checks on Waldby & Clay's State Bank—one dated April 9, 1897 (the same date as the memoranda), payable to the Oakwood Cemetery Association, or order, for the sum of two hundred dollars, signed by Abel Whitney; and the other check dated October 7, 1899, drawn upon Waldby & Clay's State Bank, for the sum of five hundred dollars, payable to order of the treasurer of Oakwood Cemetery Association, signed by Abel Whitney. Upon the margin of said check is written in the handwriting of said Whitney: "For the perpetual care of his lots, numbers 13, 14, and 15, block 2."

Digitized by Google

No. 5 contained a mortgage and an assignment thereof from Abel Whitney to two nieces, living in Kansas.

No. 6 was similar to No. 5, to Emily J. Van Buskirk, of New Jersey, a niece, as to contents. The envelope was indorsed: "Emily Jane Van Buskirk, Passaic New Jersey, to be sent to her in lieu of anything in my will. A. Whitney."

No. 7 was indorsed: "Assignments to Charles Whitney of Rome township, Lenawee county, to be delivered to him at the time of my death. [Signed] Abel Whitney." Contents, three envelopes, duly assigned.

No. 8. Indorsed: "Josephine Whitney Harris and Augusta Whitney Teachout." Contents, two bonds executed by the city of Coldwater, Michigan, Nos. 40 and 41, for five hundred dollars, each inclosed in a wrapper, upon which is written in the handwriting of said Abel Whitney the following memorandum: "Ithaca school bond, No. 29, to Mrs. Friday, $500 with her papers. Schwick mortgage, etc. A. Whitney." Also the following memorandum: "A corresponding bond to above No. 29, No. 28, for $500 I give to Fanny Lee Berdan, daughter of my late brother William A. Whitney, under the same instructions to any one handling my matters and have placed the said bond under an envelope covering the F. J. Kuhlman mortgage. This bond is under envelope with F. J. Kuhlman mortgage assignment. Coldwater school bond No. 40, I give and bequeath to Augusta W. Teachout, and a like bond, No. 41, I give and bequeath to Josephine W. Harris, both children of my late brother Russell Whitney, to be delivered to them immediately after my death, now in envelope with deed of part of my residence property. Dated January 27, 1899. Adrian Michigan. A. Whitney."

No. 9. Indorsed: "Assignment of Weaver mortgage to Charles Herbert Whitney and brother, four sisters, six persons in all." Contents, a mortgage for $3,000, duly assigned to persons named on March 23, 1897.

No. 10. Indorsed to persons named. Contents, assignment of mortgage March 23, 1897.

No. 11. Indorsement as above. Contents, assignment of mortgage, same date.

No. 12. "Wyman Stanton mortgage to be sent to Sarah E. Farnham, daughter of Alfred W. Budlong, now deceased. Her residence is Passaic, New Jersey; also check enclosed. [Signed] A. Whitney." Contents, assignment of mortgage; also a check to person named, $500.

No. 13. Indorsed: "Chas. Wilbee Esq., Adrian Mich." Contents, assignment of mortgage, same date.

No. 14. Indorsement similar to others. Contents, assignment of mortgage, same date.

No. 15. Indorsement: "Louis Krigger and wife, mortgage assignment to Mary (Waller) Bohn, $100." Also the following memorandum: "Mary Waller Bohn, Adrian, Michigan: At my death whosoever has charge of my matters, hand this to Mary Bohn. [Signed] A. Whitney." Contents: On the inside of said envelope was an assignment, which had been executed by said Abel Whitney, with an express consideration of $100, to Mary Waller Bohn, of the same place, of a mortgage made by Louis Krigger and wife to Almira Budlong, purporting to have been executed on the 13th day of February, 1897, in the presence of Rial Clay and G. N. Jones, and on the same day duly acknowledged before Rial Clay, notary public. The signature that had been written to said assignment had been subsequently cut out, as appears by said written assignment. There was also found within said envelope the following memorandum: "This mortgage was assigned to Mary Waller Bohn but soon after Mr. Krigger paid it. I therefore make my check payable to her, so in case of my death she can get the money that was paid on the mortgage as principal, viz: $100. [Signed] A. Whitney." Within said envelope was also found a check, dated April 6, 1897, on Waldby & Clay's Bank, made by said Abel Whitney, payable to Mary Waller Bohn, or order, for the sum of one hundred dollars.

No. 16. Indorsement: "For Fanny Whitney Berdan of Detroit." Contents, two municipal bonds, School District No. 1, townships of Ithaca, Star, Arcada, Newark, and Emerson, one for $500 and the other for $400; also the following memorandum: "I give and bequeath unto Fanny Lee Berdan, daughter of my late brother William A. Whitney, Ithaca county school bond No. 28 for $500, which bond is herewith enclosed, due in 1902, together with coupons for the same, to be handed to her at my death without further ceremony, by whosoever has charge of my estate. January 27th, 1899. A. Whitney." Also the further memorandum: "I here add bond No. 30, herewith enclosed, $400, to be delivered to her in like manner as the $500 bond above described. [Signed] A. Whitney."

No. 17. Indorsement: "Note of S. N. Dada to be sent or given to him at my death. A. Whitney." Contents, another envelope, with the following memoranda upon it in the handwriting of said Whitney: "Notes due me. In case of my death these notes enclosed are to be given to the parties who made them. Dated April 15th, 1898. [Signed] A. Whitney." "Insurance on house in Home of New York expires in 1901." Also notes and policy referred to.

Envelope A. On the back of envelope A, hereinbefore referred to, is the following memorandum in the handwriting of said Whitney: "How to dispose of any surplus of my estate after former amounts have been distributed as requested. A. Whitney." On the back of said envelope is a further memorandum as follows: "Circumstances had so changed since I made a will that it was not satisfactory to me and I have taken this course to dispose of my estate something according

with the present condition of matters. [Signed] Abel Whitney." On the inside of said envelope was the following: "Adrian November 1, 1897. To whomsoever has charge of my estate in settling the same after distributing the assignments, deeds, checks, etc., drawn by me, whatever there may be left, if anything, I direct and authorize them to divide it equally between Josephine Harris, Augusta Teachout, daughters of my late brother, Russell Whitney, and Mrs. Mary Friday, now in my employ. [Signed] A. Whitney." Also a further memorandum as follows: "Adrian November 1, 1897. I want one Ithaca, Gratiot county school bond of $500 belonging to me, in case of my death, handed to Augusta Whitney Teachout, one of the names mentioned in the assignment herewith, without further ceremony. A. Whitney." No such bond was found, except such as had been specifically assigned by other writing.

Envelope B. On the back of said envelope B is the following memorandum in the handwriting of said Whitney: "To Frank W. Clay, or Rial in case F. W. C. cannot attend to it or should die." On the inside of said envelope was found the following memorandum in the handwriting of said Whitney on the back of one of the pieces of paper: "To Frank W. Clay or Rial Clay, to be handed to one in case of my death. A. Whitney." On the reverse side of said piece of paper is the following: "Adrian, October 17th, 1898. To F. W. Clay, and in case he cannot attend to the business, I want Rial to do so. In case of my death I want you to step right into my matters and take charge of everything and not allow my relatives or any one else to interfere or meddle with anything. Keep Mrs. Friday in the house to look after matters until everything is settled, and what I have given her is of my own accord; she has never asked me for a penny above her wages, but she has done for me more than any relative and is entitled to all she gets and all I have provided for her. See that each one gets what I have intended for them, and pay no attention to anyone else, for they have no business with my matters and no right to anything from my estate beyond what I see fit to give them, and up to my death, unless for some expenses during my last illness, I do not owe any person one dollar. I have paid as I went along. Abel Whitney." On the inside of said envelope was another paper, upon the back of which was written in the handwriting of said Whitney the following instruction: "To Frank W. Clay, or in case of his death, to his son Rial Clay, in relation to settling my matters in case of my death." On the other side of said piece of paper is the following, in the handwriting of said Whitney: "Adrian, Michigan, November 29th, 1898. Dear Sir: I have instructed Mrs. Friday, in case of my death to take the keys to my boxes and not allow anyone else to have them until she and yourself or Rial look over the papers and distribute them to those who have assignments made to them, and as far as it is possible have them recorded and pay for the same, and write or send the paper to them, telling them the nature of the transfer to them, and any surplus divide it as I have instructed you to do in another paper. I leave the matters in this form to avoid going into probate, and this course is in all respects my will and wish. Of course, you will pay funeral expenses first, or at least save enough to do so, and for your time and trouble. I do not owe any debts unless there may be some during my last days that I have not been able to settle and you are authorized to carry out these provisions the same as though I had done it myself or was alive to do it, and I hereby authorize you as my attorney to execute my will in these matters. Yours truly, Abel Whitney. To Frank W. Clay, or in case of his death, Rial Clay." There was also found in said envelope another letter of instructions in the handwriting of said Whitney, as follows: "Adrian, August 26th, 1899. To Frank W. Clay, Rial Clay or whosoever has charge of my estate: Not knowing how soon I may be called to leave this earth I make this memoranda to show that whatever I leave Mrs. Friday is my own voluntary act. I am more dependent on her than any other person on earth, as she is not only faithful, but honest, and I can trust her in any and all things. I intend to leave her with means sufficient to maintain herself without resorting to work out for her living, and in case anyone who may perhaps, according to our laws, claim as heir or heirs, but have no claim on me or my property, attempt to reverse this my wish, I want you to see that such person or persons do not get anything out of my property. I claim the right to leave it as I think proper. She has never asked me for anything, and what I give her is of my own will and if any one, as it happens in many cases, attempts to slur or traduce her, see to it that they do not get anything, but instead, give what might otherwise go to them, to her (Mrs. Friday), and that shall be your voucher for your act. I have been disgusted with the way and manner heirs treat old and faithful women who devote their time and energies to the care of old and helpless men, for the sake of getting what does not belong to them, and I want whosoever has charge of my matters to see to it that that is not permitted in this case, and if necessary, spend all the rest of my estate in seeing this is not allowed. I am not either indebted to or under obligations to any relative living and if any of them get anything they may be thankful for it, and if they do not, they are not out of pocket on my account. Yours truly, Abel Whitney."

Envelope C. On the back of envelope marked "C" is the following memorandum

Digitized by Google

in the handwriting of said Whitney: "To Frank W. Clay, Rial Clay, to be referred, in case of my death, to whosoever has charge of my estate. A. Whitney." On the inside of said envelope was found the following letter of instructions in the handwriting of said Whitney: "Adrian October 17th, 1898. In case of my death I want Mrs. Friday to have such articles of crockery in the buttery as she may wish, including pans, knives and forks, and in fact everything in the buttery, only I would like for Mrs. Friday to divide about half between Mrs. Harris, Augusta Teachout and Amelia Miller. The large upholstered rocking chair to Mrs. Harris, if she is alive, all the rest of the chairs to Mrs. Frary of that kind of furniture, that is, the maroon or red silk plush; Mrs. Friday to have the carpet in the kitchen and in the dining room; Mrs. Harris the carpet in the parlor, and Augusta Teachout those in my bedroom and library; my books, mainly, to go to Charles H. Whitney, of Baker City, Oregon. I have already spoken of them in another paper to be referred to. Some of my books of poems might be distributed among different nephews and nieces, and I would wish to leave it so that whosoever has charge of my matters can use their discretion in making such distribution, according to taste and position of the individuals to receive them. The picture, representing family group, including William A. Whitney, to go to Dwight A. Whitney; Lincoln and his cabinet to go to Mrs. Frary, of at present Ypsilanti, but her home is in St. Joseph county, Michigan. The bathing picture in the library to Dwight A. Whitney, and the one next to it, 'Crossing the Street,' to Mrs. Friday. The cook stove to Mrs. Friday, and one coal stove to Mary Waller Bohn, one to Clanton and one to Mrs. Harris; my tables, stands, bookcases, looking glasses and any other articles not hereinafter mentioned, to be given to such relatives as Mr. Clay or the manager may think best. There are a great many things difficult to specify, but divide them as just as possible and according to the wishes of heirs. Photographs and such like, distribute as individuals wish them; Effie Dean's picture to Fanny Berdan; the clock in the library to Mrs. Friday; and that in the kitchen to Augusta Teachout. The bureau in what is called Augusta's room to go to Sampson Whitney; Almira's room to Mrs. Friday; the one in my bedroom to Mrs. Frary; the one in the library to Mary Bohn, if she wants it, if not, to Mrs. Friday; articles in cellar like canned fruit, stone ware, etc., cider and vinegar, leave it largely to Mrs. Friday to divide as she thinks best with my relatives and herself. Give the tools in the barn to Mrs. Harris. Anything not distinctly named so you will know what to do with it, leave it in the house to go to those who have a deed of that in proportion to their share in the house. Yours truly, Abel Whitney. To F. W. Clay, Rial Clay or whosoever has charge of my estate as requested." On the same piece of paper, and below the above, in the handwriting of said Whitney, is the further memorandum as follows: "The white china in closet from dining room give to Mrs. Frary, and the blue ware set to Fanny Berdan; give one mattress to Mrs. Friday, one to Helen Bohn, her niece's daughter, one to Mrs. Harris and one to Augusta Teachout, and allow Mrs. Friday to distribute the bedding among heirs as she thinks best; or leave them in the house for those who have the deeds. A. Whitney." "The silverware to the children of Mary Helen Bohn, their mother to divide the same between them. A. Whitney." Also a further memorandum, as follows, in the handwriting of Mr. Whitney: "My picture in the parlor to be given to Mrs. Friday, and also that of Mrs. Whitney, and also that of Almira M. Budlong, if she would like them, instead of going to relatives. I think she would prize them more than their relatives would. The small family group picture in the parlor to be given to Mrs. Dr. N. H. Kimball. It could be enlarged if she wished to do so. This has been done by me. A. Whitney." "The bedstead, when the mattress is divided, to go with the mattress. A. Whitney."

The bill also alleges that a short time before his death the deceased handed to his housekeeper, Mary Freitag, his bank check for $500, a school bond for $500 issued by Ithaca school district, another school bond for $500, a mortgage and assignment for $1,700, and another for $800. The bank has refused to pay the check.

The estate has been inventoried at $34,620.12, and includes cash in bank $5,008.67. No debts were left by deceased, the funeral expenses have been paid, and the property is ready for distribution, when the expenses of administration shall have been paid. Most persons interested consent to the distribution in accordance with the directions hereinbefore mentioned, but one or more of the heirs oppose. The bill is filed for directions in the premises, and prays a decree fixing the rights of the parties.

Several minor defendants answered by guardian ad litem, and several of the adult heirs by solicitor. Mary Freitag and others, not relatives of deceased, also answered. Most of the answers admit the allegations of the bill, and some ask that the directions of the deceased be given effect. A hearing was had, and the court made a decree: "That Abel Whitney, in his lifetime, did divide the greater part of his property, and set it apart to the various parties mentioned in said bill and hereinafter named, and did make and constitute himself a trustee for the said parties for the purpose of reserving unto himself the use thereof during his lifetime, and did all that was in his power to do to deliver to the said parties their portion thereof, consistent with his desire to retain the

use for his support during his lifetime; and that the various letters of instructions left by him and directed to Frank W. Clay were for the purpose of informing the said Clay what he had done with his property, with instructions to said Frank W. Clay to make the delivery after his death. * * * That the division of the notes, mortgages, bonds, checks, etc., were made by the said Whitney, and put under separate covers for the parties named by him, meaning and intending by so doing to hold and treat it as their property; and that, when payments were made of interest on any of said notes, mortgages, or bonds, that was treated as his own, and used for his support so far as needed; and that whenever payment was made upon the principal, that was treated as belonging to the party for whom it had been set apart, and the money, or its equivalent by way of check upon the bank, or in some other manner, was kept separate and distinct from the other property, but the party to whom it belonged should have the full benefit thereof." It was adjudged and decreed that "Frank W. Clay proceed to carry out the instructions given him by said Abel Whitney in the writings left by him, in so far as it may be necessary to deliver and transfer to the parties entitled thereto that portion of the property set apart to them by the said Abel Whitney in his lifetime, and held by him as trustee aforesaid. * * * The mortgages, bonds, assignments, checks, and other papers delivered to Mary Freitag, as set forth in paragraph 28 of the bill, were delivered by the said Abel Whitney in his lifetime, and there was a valuable consideration therefor, and the same is hereby declared as property transferred to her to convey title, and the bank is hereby authorized to pay the check of $500 delivered to her. And it is further ordered that the various banks upon which the checks hereinbefore in this decree mentioned were drawn by the said Abel Whitney be, and are hereby, authorized to pay the same to the payees of said check." The appeal was taken by Sarah A. K. Frary, a niece, and Sarah Layton, the sister, of deceased. Their answers leave complainant to his proofs, allege that it would be unsafe to accept distribution in accordance with deceased's directions, and ask an adjudication of the rights of the parties. The testimony sustains the allegations of the bill in most essential particulars.

R. A. Watts, for complainant. John B. Ayres, for defendant Sarah Layton. Stewart & Bliss, for defendant Sarah Kline Frary. Morgan & Priddy, for other defendants.

HOOKER, C. J. (after stating the facts). Complainant contends: (1) That the acts of the deceased constituted him a trustee for the several persons named in the papers executed by him; (2) that, if not, the deeds and assignments should be held to operate as a testamentary disposition of the property therein described. Counsel for the defendants discuss three questions, into which they say that the case should be resolved, viz.: (1) Are the checks, including the one to Mrs. Freitag, legal transfers of the funds in the bank, and are the payees named therein entitled to draw the money from the bank thereon, or are they void? (2) Are the transfers of the real estate by way of deed and the transfer of mortgages by way of assignments valid and legal transfers of the property attempted to be transferred to the persons named therein, or are they void for want of delivery? (3) Do the deeds and the assignments of mortgages operate as a will?

We can have no doubt that the papers found in the tin box indicate the deceased's wishes as to the disposition of his property. Had he seen fit during his life to deliver the deeds and assignments to those for whom they were intended, the title would have passed, and they would have become valid gifts. Had he made a formal will directing such disposition, the law would carry out his expressed wishes. But he did neither.

1. Did the deceased hold the property in trust? This cannot have been, unless he divested himself of the equitable title to the property and vested it in others. He executed deeds, and assignments of mortgages of real estate, and set them aside in packages for the respective parties. He drew checks upon his banker, and made the same disposition of them. He kept all of these in his own possession up to the time of his death. Clearly, if this was all that he did, these were not gifts, for want of delivery. See Young v. Young, 80 N. Y. 424, 36 Am. Rep. 634. Indeed, it is not claimed that they were gifts. The case last cited was much like the present, and, while it was intimated that a delivery to a trustee would be sufficient to complete a gift inter vivos, it was said that a trust would not be created except by acts or words, unequivocal, implying that the person held the property as trustee for another; and, while it is not necessary that the declaration of trust be in terms explicit, the donor must have evinced by acts which admit of no other interpretation that such legal right as he retains is held by him as trustee for the donee, or, as said in Milroy v. Lord, 4 De G., F. & J. 264, "The settler must transfer the property to a trustee, or declare that he holds it himself in trust." We have held that a donor may be a trustee for the donee. See O'Neil v. Greenwood, 106 Mich. 572, 64 N. W. 511. But it does not follow that the donor of an uncompleted gift is a trustee in all cases. In the case of Young v. Young, supra, attention is called to two cases where the courts practically held such a rule. Morgan v. Malleson, L. R. 10 Eq. Cas. 475; Richardson v. Richardson, L. R. 3 Eq. Cas. 686. But the writer of the opinion says: "In speaking of these cases in Richards v. Dalbridge, L. R. 18 Eq. Cas. 11, Sir Geo. Jessel

Digitized by Google

M. R., says: 'If the decisions of Lord Romilly (in Morgan v. Malleson) and of Vice Chancellor Wood (in Richardson v. Richardson) were right, there never could be a case where the expression of a present gift would not amount to an effectual declaration of trust.' And it may be added that there never could be a case where an intended gift, defective for want of delivery, could not, if expressed in writing, be sustained as a declaration of trust. Both of the cases cited are now placed among overruled cases." He continues: "In Moore v. Moore, 43 L. J. Ch. App. (N. S.) 623, Hall, V. C., says: 'I think it very important, indeed, to keep a clear and definite distinction between these cases of imperfect gifts and cases of declarations of trust, and that we should not extend, beyond what the authorities have already established, the doctrine of declarations of trust, so as to supplement what would otherwise be mere imperfect gifts.' If the settlement is intended to be effectuated by gift, the court will not give effect to it by construing it as a trust. If it is intended to take effect by transfer, the court will not hold the intended transfer to operate as a declaration of trust, for then every imperfect instrument would be made effectual by being converted into a perfect trust. Milroy v. Lord, 4 De G., F. & J. 264. The case of Martin v. Funk and kindred cases cannot aid the respondent. In all those cases there was an express declaration of trust. In the one named the donor delivered the money to the bank, taking back its obligation to herself in the character of trustee for the donee; thus parting with all beneficial interest in the fund, and having the legal title vested in her in the character of trustee only. No interposition on the part of the court was necessary to confer that character upon her; nor was it necessary by construction or otherwise to change or supplement the actual transaction. None of the difficulties encountered in the present case stood in the way of carrying out her intention. It was capable of being executed in the form in which it was expressed. The question whether a remainder in a chattel may be created and given by a donor by carving out a life estate for himself and transferring the remainder without the intervention of a trustee, is learnedly discussed in the appellant's brief; but the views we have expressed render it unnecessary to pursue that inquiry. We are satisfied that it is impossible to hold that the facts as they appear establish a valid transfer of any interest in the bonds in question to the donee, and that the attempted gift cannot be sustained as a declaration of trust." Accordingly, we have held that an expression of an intention to pay another $1,000, in accordance with the expressed wish of the husband of the person expressing such an intention, did not create a trust. Hamilton v. Hall's Estate, 111 Mich. 294, 69 N. W. 485. It was there said that, "to create a trust, where the donor retai property, the acts or words relied o be unequivocal"; citing 27 A. & E Law, 56, and that "this rule applies w culiar force where it is claimed th donor constituted himself trustee." A there: "The mere declaration of an in or purpose to create a trust, which carried out, is of no value, and a mere ment or statement of an intent to n gift in the future is not sufficient. I be such that, from the time it is ma beneficiary has an enforceable equita terest in the property, contingent upo ing except the terms imposed by the d tion of the trust itself." See, also, P lar Savings Bank v. Wineman, 123 Mi 81 N. W. 1091. These cases show t mere making of the deeds and chec keeping them in possession are as fa creating a trust as they are from ma completed gift inter vivos.

We must, therefore, look at these a er writings and the acts and words deceased for a declaration of a trust equivalent, failing to find which w say there was no trust. Counsel cal tion to the directions given Mr. Clay deceased's actions in two instances in with the property, where he is said t accounted for certain moneys collecte two mortgages previously assigned. instances appear from memoranda of ceased found in two of the envelopes. have been quoted, but are repeated f venience: "Adrian, June 10th, 1897. Lamont mortgage had been assig Charles Herbert Whitney, of Baker C egon, and Lamont paid $200 on it, I check for that amount, payable to th of said C. H. W. to take the place of t indorsed on that mortgage. A. W The check to be sent to him in case death at once by whosoever has ch my business." "This mortgage was a to Mary Waller Bohn, but soon aft Krigger paid it, and I therefore ma check payable to her so in case of m she can get the amount that was due amount as principal, viz., $100. [Abel Whitney." So far as these two t tions are concerned, the action of the ed is as consistent with defendants' as complainant's, and therefore should said to declare a trust. Coming next conversations with Clay, testator's ments to him and others that he had d of his property as he wanted it to go consistent with the idea that he had will (as he had at one time apparently or that he had parceled it out in the w the record shows, to be given effec death, if not changed, as that he in Clay to understand that he was holdin trustee, which he could easily have sa was his design. See Young v. Young Y. 435, 36 Am. Rep. 634, for a parall on this point.

Digitized by Google

We will next examine the contents of the envelopes.

No. 1. In this deceased says: "In addition to the enclosed, I want each one named to have the following sums in money, and I have made checks for the amount, to be delivered to them at my death." He concludes as follows: "Mr. Clay, or whosoever has these papers, deliver them to the parties upon my death." Clearly, he did not hold the checks in trust; and why should not this fact, and the language used, characterize his holding of the deed inclosed and withheld from the grantees? This is certainly no declaration of trust.

No. 4. "This is to be handed to the officers of the Oakwood Cemetery Association, in case of my death." This envelope contained two checks. Why were these retained, if he intended to pass title to the money?

No. 6. The contents of this envelope were to be "sent to Emily J. Van Buskirk, in lieu of anything in my will." This indicates that he had made or contemplated a will, and is not consistent with the idea of a trust.

No. 7. Contents "to be delivered to him at the time of my death."

No. 8. A similar provision is found here.

No. 15. "At my death whosoever has charge of my matters, hand this to Mary Bohn." This was one of the cases where he subsequently made a collection, hereinbefore mentioned, and substituted his check for the security paid.

No. 16. Here he "gives and bequeaths" a bond "to be handed to her at my death without further ceremony, by whosoever has charge of my estate." He afterwards added another bond to be delivered to her in like manner. The words "give and bequeath" are suggestive of a future, rather than a present delivery, and is not appropriate language for a declaration of trust.

No. 17. "Note of S. N. Dada to be sent or given to him at my death." And again: "In case of my death these notes enclosed are to be given to the parties who made them."

There is not any evidence of a trust, in these papers. On the contrary, it seems plain that the deceased proposed to keep them until he died. The letters contained in envelopes A, B, and C do not indicate that the deceased supposed that he held this property in trust. On the contrary, they direct distribution after death, and one found in Exhibit B states that he "left matters in this form to avoid probate, and this course is in all respects my will and wish," while in another he discusses Mrs. Freitag, and directs whoever shall have charge of his matters to see to it that she gets what he intends for her, and "if necessary spend all the rest of my estate to that end." This is cogent evidence that he proposed to keep control of his estate during life. The letter in Exhibit C has all of the attributes of a will, except a proper execution, as far as it goes. It contains nothing in the nature of a declaration of trust as to the articles mentioned. Counsel rely, in their contention that this property was held in trust, upon the cases of Ellis v. Secor, 31 Mich. 185, 18 Am. Rep. 178, and O'Neil v. Greenwood, 106 Mich. 572, 64 N. W. 511. The former was a trover case, and the defense was based upon a gift causa mortis. The circumstances in that case show that the donor was in extremis, and did all that she could to express a present intention to make a gift, and this was held sufficient to defeat trover brought by the administrator. The case of O'Neil v. Greenwood was much stronger than the present case, and there was strong evidence of an explicit declaration of trust. No trust was created in the present case, for there is nothing which indicates an intention that effect should be given to any of the papers before his death.

This discussion has not taken into consideration the question whether a trust in real estate can be created in the way claimed under our statute of uses and trusts.

2. Can the deeds and assignments of mortgages be treated as a testamentary disposition of the property? Counsel for the complainant appear to concede that the checks cannot be so treated, and there is nothing upon the faces of the deed assignments to indicate that they were not to take immediate effect, which they would have done had they been delivered. We must look, then, to other circumstances to show the testamentary character, and there is plenty of evidence tending to show that intent, provided it can be said to be such evidence as the law accepts. Thus we have seen that most of the envelopes contained memoranda showing an intent that these gifts should be given effect after death, and the letters to Clay contain similar indications, but no writing which contains such evidence was executed in conformity to the statute of wills. Had such memoranda not been accompanied by the deeds and assignments, no one would claim that they could be given effect as wills, and whatever force is to be given to them must come from the fact that formal deeds and assignments, duly witnessed, were inclosed with them. We think it obvious that no paper not executed in conformity to our statute can be considered a will, and, with the exception of the deeds and assignments, these papers were not. Whether the deeds and assignments may be so considered depends on the intent of the testator and the character of the proof disclosing such intent. If the intent must appear upon the face of the instruments themselves, we cannot hold them to be testamentary, for it does not so appear; but, on the other hand, if the question of intent is susceptible of proof by parol, and is permissible where the instrument is unambiguous upon its face, it will be easy to infer such intent. The cases may be divided into three classes: (1) Those in which the testamentary intent is clearly deducible from the writing; (2) those where the instrument is ambiguous, or of

Digitized by Google

doubtful meaning; (3) those where there is nothing to indicate a testamentary intent, but, on the contrary, the instrument is in terms plainly a deed. In the first class of cases there is no difficulty in holding the documents to constitute a will if properly executed. In the second class the instrument may doubtless be interpreted in the light of the circumstances. In cases of the third class (and it is in this class that the documents properly belong), may the instrument be contradicted, and determined to be a will, upon extrinsic evidence of an intent on the part of the testator that they be given effect by delivery upon his death? This is really the only important question in the case, for, answered in the affirmative, we have ample evidence to justify us in calling the instruments a will, while a negative answer will require us to treat them merely as undelivered deeds without force. We have been unable to find a Michigan case directly in point. Bigley v. Souvey, 45 Mich. 370, 8 N. W. 98, is a case of the first class. In Lautenshlager v. Lautenshlager, 80 Mich. 285, 45 N. W. 147, the writing contained evidence indicating an intent that the writing was to take effect at death, and, like Ferris v. Neville, 127 Mich. 444, 86 N. W. 960, 54 L. R. A. 464, 89 Am. St. Rep. 480, it belongs to the second, if, indeed, it does not belong to the first, class. The remaining case of Lincoln v. Felt (Mich.) 92 N. W. 780, arose over a lost deed. The case went to the jury upon the question whether the testator's intent was that the gift should take effect only after death, and that such intent was expressed in the instrument in some appropriate form. The jury found it to be a will, and the order entered in accordance with the verdict was affirmed. Clearly, this was as favorable instruction as the contestants could ask; but it is obvious that the question before us now was not passed upon. The proposition is to show that certain instruments, which could only become effective by delivery, can be made effective by calling them by another name, and giving them an interpretation which their words do not warrant, through parol evidence tending to show that such was the testator's intention. The authorities cited in support of this contention are the Lautenshlager Case, hereinbefore mentioned, which does not support it, and a statement in 29 A. & E. Enc. of Law, at page 158, where it is said that "evidence is admissible to show that a deed or other instrument of gift, which on the face of it is not testamentary, was not intended to operate until the death of the person executing it, to show that an instrument on the face of it testamentary was not written animo testandi, but not to show that the operation of a will absolute in terms depends upon a condition." An examination of the authorities cited in support of the first proposition will show that they are for the most part cases where the instrument was reasonably open to two constructions, and related to personal property. Thus in Cock v. Cooke, 1 L. R. P. & D. 240, a paper was executed in the following language: "I wish Myne Sister, Louisa Cock * * * to have my Schering (Charing) Cross bank book for her own use." Proof that it was executed in contemplation of death, and as a bequest, was admitted. It was clearly open to that construction upon its face, and can hardly be said to have been a valid, present gift or assignment. In the Goods of Morgan, 1 L. R. P. & D. 214, the instruments all contained clauses directing that the conveyances were not to take effect until after the testator's decease. Nothing is said in this case about extrinsic evidence. In Robertson v. Smith, 2 L. R. P. D. 43, the deceased died November 8th, having made a will July 9th, and a codicil October 12th, previous. November 7th he executed a document in presence of two witnesses, to the following effect, viz.: "I hereby make a free gift to Maria R. of sixty pounds, and to John V. of fifty pounds, being the sum deposited by me with," etc. Parol evidence of the situation was admitted to show the intent to make a testamentary gift. In Goods of Coles, 2 L. R. P. D. 362, the paper was plainly as consistent with the intention of a testamentary disposition as a gift inter vivos; in fact, more so. The circumstances were shown, and it was held a will. Lester v. Smith, 3 S. & T. 282, is not in point upon this question, while In re Goods of English, 3 Swab. & T. 586, is similar to Cock v. Cooke, supra. The instrument considered in Robertson v. Dunn, 6 N. C. 133, 5 Am. Dec. 525, was doubtful upon its face. If the text is construed in the light of these decisions, it does not support the proposition that parol evidence may be offered to show that a deed not doubtful upon its face was intended to have a testamentary effect. In 1 Underhill on Wills, p. 45, it is said: "The courts, in determining whether an instrument disposing of real estate is a deed or a will, are guided by the following considerations: If the instrument, whatever its form or the mode of its execution, passes a present interest which vests from the time of its execution, it will be a deed, though the possession and enjoyment of the estate granted in it do not accrue to the grantee until a future time. On the other hand, if the instrument, though it is in form a deed, does not convey any vested interest, right, or estate until the death of the person executing it, it will be regarded as testamentary and revocable. The employment of language appropriate to either instrument is never controlling. Nor is the belief of the maker or an understanding between the parties interested that the instrument is a will or a deed conclusive upon the court (except when made so by statute), though evidence as to the belief of the parties as to its operation and effect is relevant to show their understanding as to the intention in executing it. The court must take into consideration the language of the instrument, and the circumstances surround-

Digitized by Google

ing the parties and attendant upon its execution; and if, from all the evidence, it appears to have been the intention of the maker that the instrument shall have a post mortem effect only, it will be held to be a testament, and not a deed." In discussing the admissibility of parol evidence, the author says: "In seeking the intention of the maker of an instrument, the court must, in the first instance, consult the language of the writing itself. The fact that the writing which is presented for probate is testamentary in form is some evidence that it is a will. The form of the instrument is not controlling. The court of probate may go outside of the writing to ascertain its character; not to supply an intention which cannot be found in it, but to ascertain with what intention the execution of the instrument was accompanied." This plainly implies the correct rule that the writing must be susceptible to such a construction, without doing violence to its plain terms, and no amount of parol testimony should authorize a court to vary the unmistakable terms of the instrument alleged to be a will. These papers plainly provide in terms for a present transfer of property. To show that a different intention existed, would be to contradict them, and this cannot be done.

We have examined many authorities where the question involved was whether papers in form deeds were testamentary in character, and it is a significant fact that not one has been found which supports the complainant's contention. In nearly every instance the question is solved from the writing itself, or, if not, the construction adopted is not contradictory to its provisions, which are open to two interpretations. We cite a number of the cases alluded to: Stevenson v. Huddleson, 52 Ky. 299; Armstrong v. Armstrong, 4 Baxt. 357; Miller v. Holt, 68 Mo. 584; Brewer v. Baxter, 41 Ga. 212, 5 Am. Rep. 530; Fulcher v. Royal, 55 Ga. 69; Williams v. Tolberg, 66 Ga. 127; Worley v. Daniel, 90 Ga. 650, 16 S. E. 938; Goff v. Davenport, 96 Ga. 423, 23 S. E. 395; Hall v. Bragg, 28 Ga. 330; Herrington v. Bradford's Ex'x, Walk. 520; Wall v. Wall, 30 Miss. 91, 64 Am. Dec. 147; Sartor v. Sartor, 39 Miss. 760; Sewell v. Slingluff, 57 Md. 539; Lauck v. Logan (W. Va.) 31 S. E. 987; Wren v. Coffey (Tex. Civ. App.) 26 S. W. 142; Bowler v. Bowler, 176 Ill. 541, 52 N. E. 437; Robinson v. Brewster, 140 Ill. 649, 30 N. E. 683, 33 Am. St. Rep. 265; University v. Barrett, 22 Iowa, 60; In re Longer's Est. (Iowa) 78 N. W. 834; Pres. v. Merritt (C. C.) 75 Fed. 480; Cates v. Cates, 135 Ind. 272, 34 N. E. 957; Stroup v. Stroup, 140 Ind. 179, 39 N. E. 864, 27 L. R. A. 523; Bromley v. Mitchell, 155 Mass. 511, 30 N. E. 83; Walker v. Jones, 23 Ala. 448; Gilliam v. Mustin, 42 Ala. 365; Mosser v. Mosser's Ex'r, 32 Ala. 551; Hall v. Burkham, 59 Ala. 349; Sharp v. Hall, 86 Ala. 113, 5 South. 497, 11 Am. St. Rep. 28; Jordan v. Jordan's Adm'r, 65 Ala. 301; Crocker v. Smith, 94 Ala. 295, 10 South. 258, 16 L. R. A. 576; Turner v. Scott, 51 Pa. 126; Patterson v. English, 71 Pa. 454; Knox's Estate, 131 Pa. 220, 18 Atl. 1021, 6 L. R. A. 353, 17 Am. St. Rep. 798; Outlaw v. Hurdle, 46 N. C. 150; Lyles v. Lyles, 2 Nott & McC. 531; Hone v. Van Schaick, 3 N. Y. 538; Hazleton v. Reed, 46 Kan. 73, 26 Pac. 450, 26 Am. St. Rep. 86; Lacy v. Comstock, 55 Kan. 86, 39 Pac. 1024; In re Ogle's Est. (Wis.) 72 N. W. 389; Clarke v. Ransom, 50 Cal. 595; Leaver v. Gauss (Iowa) 17 N. W. 522; Daniel v. Hill, 52 Ala. 430; Frew v. Clarke, 80 Pa. 171. That parol evidence is not admissible to add to, alter, vary, or contradict a will, see the following: 1 Red. on Wills, p. 426, sub. 8, and cases cited, and page 435, sub. 21, page 496, sub. 2, page 502, sub. 10, page 507, note 21; Hone v. Van Schaick, 3 N. Y. 544; College v. Merritt (C. C.) 75 Fed. 480, Syl. 3: Sewell v. Slingluff, 57 Md. 537; Herrington v. Bradford's Ex'x, Walk. (Miss.) 520; Miller v. Holt, 68 Mo. 584; Armstrong v. Armstrong, 4 Baxt. 357. For a discussion of this general subject, see 19 Cent. L. J. 46.

We have had difficulty in finding a case in which the exact point before us is raised, but it seems manifest that the same rule that forbids the contradiction of an established will should forbid the contradiction of the same instrument as a means of establishing it as a will, when its terms plainly show it to be a deed conveying a present interest. It is only when the writing is of doubtful import that interpretation by the aid of extrinsic evidence becomes necessary, and in such case interpretation, not contradiction, is permissible.

We are reluctantly driven to the conclusion that we cannot give effect to the deceased's manifest desire, a desire so well established, and so apparently well grounded and just, as to merit our approbation; but we fear that the trite saying that "hard cases make bad law" would be applicable should we sustain the complainant's contention. To do so would be to override established rules and principles essential to the protection of the rights of heirs.

It remains to refer to the rights of Mrs. Freitag. The record indicates that the papers designed for her were delivered to her, and we do not know that any one disputes it. Being delivered, they became gifts inter vivos, and conveyed title to her. As to the check for $500, we feel justified in finding it to be based upon a valid and sufficient consideration, and therefore collectible against the estate. The parties are all before the court, and we think that her rights should be set at rest by this decree. Otherwise we are of the opinion that the property should be decreed to be assets of the estate, subject to administration in accordance with law. Neither party will recover costs, except Mrs. Freitag. She will recover costs from the estate. The disbursements of the complainant should be allowed him from the estate.

Decreed accordingly. The other Justices concurred.

Digitized by Google

NEGAUNEE IRON CO. et al. v. IRON CLIFFS CO. et al.

(Supreme Court of Michigan. Sept. 15, 1903.)

MINES AND MINING—DEEDS—CONSTRUCTION—MINING RIGHTS — RESERVATION — LEASES—ABANDONMENT — NONUSER — INCORPOREAL HEREDITAMENTS — APPURTENANT EASEMENTS—DESTRUCTION — EQUITY — JURISDICTION—SUIT TO QUIET TITLE—BILL TO RESTRAIN THREATENED TRESPASSES.

1. Equity will enforce a forfeiture of a mining lease where such forfeiture works equity and protects the landowner against the indifference and laches of the lessee, and will prevent great loss.

2. Where defendants, who claimed a right to mine in certain ground owned by complainants, who were in possession, threatened to enter upon the land and remove ore therefrom, and complainants claimed that defendants' lease was forfeited, and that they had no rights in the land, and that irreparable injury would result from defendants' threatened acts, equity had jurisdiction for the purpose of restraining such threatened trespasses.

3. Where a bill to restrain trespasses on mining land alleged that the P. Iron Co., which had previously held a lease of the land under which defendants claimed, was a mere dummy, and that defendants for many years had owned all its capital stock and property and managed all its corporate affairs, and that all its accounts, if any, were kept on defendants' books, and that such company's charter had expired by limitation, and had never been reorganized, the bill was not objectionable for failure to make such company a party defendant.

4. Where the facts on which objections to the jurisdiction of a court of equity were based were apparent on the face of the bill, such objections were waived by defendant's failure to raise them by demurrer.

5. The rule that deeds must be construed most strongly against the grantor cannot be invoked to defeat the intent of the grantor, which fairly appears from the instrument as a whole.

6. A deed, and a contract attached thereto, and executed at the same time, provided that the grantor conveyed certain lands to the grantee for a certain consideration, and "in further consideration of reserving to himself an undivided one-half interest in the minerals which have been or may be discovered on the premises" described as conveyed. By a proviso the grantee was required to account for ore mined and sold not for his own use or for manufacturing purposes, the grantor's interest being described as "his joint one-half interest therein." *Held*, that by such deed the grantor carved the estate into two parts, conveying to the grantee title to one-half the minerals, and retaining title to the other one-half in himself.

7. Certain mining land was conveyed to H., the grantor reserving an undivided one-half of all minerals contained therein. Thereafter H. executed a mining lease to defendants' predecessor, and in a subsequent suit by a corporation which had succeeded to certain of the rights of the original grantor defendants' predecessor filed an answer averring that its ownership under the lease was subject to the rights of the complainant to an undivided one-half of all the minerals previously or thereafter discovered on the land. *Held*, that such answer constituted a recognition that the original grantor retained title in fee to one-half of the mineral in the land by his deed to H.

8. A deed to mining land reserved to the grantor an undivided one-half interest in all minerals discovered on the premises, together with a mining right in the land, and provided that the grantee or his assigns should have the sole right, free of cost or compensation to the grantor, to mine for their own use or for manufacturing purposes within the county any minerals found on the premises, but should have no right to sell the same for exportation without accounting to the grantor for his joint one-half interest therein. *Held*, that such deed gave to the grantee no title to the ore in place, but only conferred on him a sole right to mine for himself and assigns for the purpose specified, which was an incorporeal and indivisible hereditament.

9. An owner of mining land conveyed the same to H., reserving an undivided one-half interest in all minerals on the land, and conferring on the grantee an incorporeal, indivisible right in himself and his assigns to mine on the land for his own use or for manufacturing purposes within the county. Thereafter H. formed a corporation for the purpose of operating one pig-iron furnace, with two stacks, on the premises, and leased to the corporation a right to mine so much ore on the land as it should actually convert into merchantable iron in its own establishment. The circular sent out by the corporation contemplated the erection of but a single furnace, and previous to the execution of the lease the corporation contracted with another to supply it with ore, which contract recited that the corporation proposed to erect and build a blast furnace establishment of one or two stacks for manufacturing pig iron. *Held*, that the rights acquired by the corporation under the lease were appurtenant to the furnace then existing, and that it acquired no right to mine more ore than that necessary to supply such furnace.

10. Where the right to mine iron ore under a lease was appurtenant to a blast furnace erected and intended to be used to smelt the ore so mined, the abandonment and destruction of the furnace destroyed the appurtenant right to mine ore under the lease.

11. Soon after the execution of a 99-year mining lease, the P. Iron Co., lessee, made explorations and found ore in nonpaying quantities. The lessee thereupon abandoned the explorations, and for 43 years made no other attempts to mine on the land. In 1866 it conveyed to defendant by lease for 10 years all its iron-works, buildings, etc., and provided that dividends should be paid directly to its stockholders. Defendant afterwards became owner of all the stock of the P. Iron Co., which never thereafter exercised any control of its furnaces. It was notoriously regarded as merged in defendant corporation, and no reports required by law were filed by its officers. In the meantime complainants, who had acquired the interest of the lessor of the P. Iron Co. and a reserved interest in the land, had discovered valuable deposits, expended large sums in explorations, and developed valuable mines on the property, during which time the P. Iron Company stood by in silence. *Held*, that the lease to such iron company had been abandoned and forfeited by nonuser.

Appeal from Circuit Court, Marquette County, in Chancery; John W. Stone, Judge.

Bill by the Negaunee Iron Company and others against the Iron Cliffs Company and others to quiet title to certain mining lands. From a decree in favor of complainants, defendants appeal. Affirmed.

In 1857 one James L. Reynolds was the owner in fee of the lands involved in this suit and other lands. February 26, 1857, he conveyed to one Charles T. Harvey 4.12 acres by warranty deed. The deed, after the description, contains the following: "Which lands are sold with full warranty, subject, however, to the conditions and agreements of the contract marked 'A' here-

¶ 5. See Deeds, vol. 16, Cent. Dig. § 235.

Digitized by Google

with appended, between the parties hereto, concerning the undiscovered minerals on said lands." Then follow the usual covenants of warranty of title.

The contract is as follows:

"This memorandum of agreement, made this 26th day of February, by and between James L. Reynolds of Chicago, State of Illinois, of the first part, and Charles T. Harvey of Marquette County, State of Michigan, of the second part.

"Witnesseth—That the party of the first part has this day conveyed by 'warrantee' deed (to which this contract is attached) to the party of the second part certain lands therein described amounting to four thousand one hundred and sixty-two $^{46}/_{100}$ acres, for the consideration of the sum therein named and also in the further consideration of reserving to himself an undivided half interest in and to all the minerals which have been or may be discovered on the premises referred to as conveyed, together with the rights of having, or acquiring so much of the surface privileges as may be necessary to mine or develop the same by paying one-half of the equitable or appraised valuation per acre for the surface thus used or acquired. Provided not more than twelve dollars per acre shall be adjudged to be the value of unimproved lands taken for such mining purposes, besides which, however, full compensation shall be paid to the party of the second part, or his assigns, for damages which may by such mining or occupancy ensue to the business connected with or improvements placed upon such land, by the party of the second part or his assigns. Such payment to be made by the party of the first part on an equitable, agreed value, or upon an appraised valuation made by disinterested 'Referees,' one designated by each party [hereto] and they choosing a third, and the decision of the three thus chosen to be final. And when such payment is made, he of the first part shall be entitled to enter upon and occupy any portion of said lands for mining purposes as aforesaid solely.

"Provided—And it is agreed, that the party of the second part, or his assigns, shall have the sole right, free of cost or compensation to the party of the first part, to mine for their own use or for manufacturing purposes, within the limits of Marquette county, any mineral ores, or marble found on any of the premises herein 'referred' to, but shall have no right to sell to other parties for exportation as aforesaid, without accounting to the party of the first part for his joint half interest therein."

On April 2, 1857, the Pioneer Iron Company was organized by Harvey and others with a capital of $125,000, divided into 5,000 shares of $25 each. The purpose of its organization is stated in its articles to be "procuring a suitable location for a manufactory and lands to furnish coaling facilities therefor in the Upper Peninsula of the state of Michigan and working the same for the production of merchantable iron and such other use of their lands as the company may hereafter determine and adopt." On April 22, 1857, Harvey conveyed to the Pioneer Iron Company 2,688 acres of the lands conveyed to him by Reynolds and 800 acres of other lands owned by him. The consideration expressed therein was $25,000. After the description is the following:

"All of which is sold subject to the reservation of minerals and conditions of using and developing and sale of the same on said lands as specified in the deed of the premises by James L. Reynolds and wife to the party of the first part, but all the interest thereby acquired by the party of the first part to the one undivided half of the minerals exported and the privileges of manufacturing free of cost ores which may be mined on the said lands is hereby assigned as fully as can be done by the party of the first part to the party of the second part hereto."

September 17, 1857, said Harvey executed an instrument (known as the "99-Year Lease") to said Pioneer Iron Company conveying to it "certain rights and easements hereinafter described (subject to the provisions and limitations, thereto annexed) in and upon certain pieces or parcels of land." After the description containing 646 acres, this instrument proceeds:

"The rights and easements aforesaid being: 1st.—The right to cut and remove all the timber and wood standing or otherwise being on said lands for the purpose of converting the same into charcoal or such other uses as may be desirable in the prosecution of business by the party of the second part. Such wood and timber to be removed from said lands within five years from the date hereof at such times within that period as the party of the second part may elect, in the following order, however, viz.

"After clearing its own land on section six, T. 47 N. R. 26 W., the party of the second part shall next remove the timber and wood from the land in that section herein described until it is all removed. Then it shall remove that on land in section seven herein described. Then that on section eight in like manner. Then that on section five first clearing that on its own land in the same and lastly that on section thirty-one T. 48, N. R. 26 W. (This last stipulation, however, to be subject to future agreements between the parties hereto.)

"2nd.—The party of the first part does hereby let, lease and demise to the party of the second part for the consideration hereinbefore mentioned and for the full end and term of ninety-nine years from and after the date hereof, all the lands hereinbefore mentioned and all other lands now owned by the party of the first part in either of the townships above mentioned for

Digitized by Google

the sole purpose of mining and quarrying at its own expense such ores and marble as may be found thereon and subject to the provisions hereinafter mentioned, viz.:

"Provided, it shall not quarry, mine or remove any ores on said lands except such as it shall actually convert into merchantable iron in its own furnace or forges, and provided further it shall not in such mining or quarrying operations use or injure any of the improvements which may be placed upon said lands by other persons without paying just and equitable damages therefor, nor shall it occupy in such operations more land than is absolutely necessary to open and work successfully such mines of iron or marble as may be discovered. And it shall purchase and pay at the rate of twelve dollars per acre for unimproved lands which it may acquire for such purposes. The rights and easements above mentioned shall descend to the corporate successors of the party of the second part, but not to its assigns. The party of the first part hereby agrees and binds himself in nowise to convey or encumber any of the lands hereinbefore mentioned except with a reservation of all rights and easements hereby secured and intended to be secured to the party of the second part. All the above rights and easements are subject, however, to the terms of a certain deed and an agreement, accompanying the same, executed by James L. Reynolds and wife to the party of the first part on the 26th day of February, A. D. 1857, and recorded in Register's office of said county in Liber 'B' of Deeds on pages 381 and 382, to which record for further particulars reference is hereby made."

This lease covers the land here in dispute. On the same day the deed from Harvey to the Pioneer Iron Company was executed, viz., April 22, 1857, Harvey executed an instrument to the Pioneer Iron Company covering the same land as that described in the above instrument of September 17th. The rights and privileges thereby conveyed are as follows:

"First.—The right to cut and remove all the timber and wood standing or otherwise thereon, for the purpose of converting the same into charcoal for manufacturing purposes or such other uses as may be desirable to the party of the second part. Such wood and timber to be used and removed within five years from date, when within that period it shall suit the convenience of the party of the second part thus to do. Provided, however, that after clearing its own land in fee, on section six, T. 47, R. 26, it shall next remove the timber from the balance of land in that section herein described until it is all removed. Then it shall remove that on section seven herein mentioned. Then that on section eight in like manner. Then next in succession that on section five after clearing its own land on the same, and lastly those in section thirty-one, in township 48 of range 26 west. This stipulation, however, at all times to be subject to future agreements between the parties hereto. Provided, further, that as far as may be consistent with the interest of said company, it being the judge in these respects, the land when the timber is removed shall be left in a favorable condition for improvements, particularly with a view to the erection of other furnaces thereon.

"Second.—The party of the second part shall have in perpetuity the right, free of charge (except for land damages hereinafter mentioned), to mine, obtain and use any ores or marbles found on said lands, or on any other lands now owned by the party of the first part in either of the townships above mentioned, provided it shall not mine or obtain any ores on said lands except what it shall actually convert into merchantable iron in its own establishment. It shall also be at its own expense for mining, and shall not use or injure the improvements placed upon the land by others without paying just and equitable damages therefor. Neither shall it be entitled to take any more land to occupy than is clearly necessary to open the mine for the iron ore or marble to be obtained readily therefrom, and shall pay twelve dollars per acre for unimproved lands which it may require.

"These privileges shall only descend to the party of the second part's successors in corporate succession.

"The party of the second part agrees not to in any wise convey the lands mentioned except with a reservation of these rights and privileges to the party of the second part.

"These rights and privileges are made subject, however, to the terms, of the prior deed of James L. Reynolds and wife to the party of the first part by which he acquired title to the lands mentioned, which reservations were known prior to the executing of this indenture."

This instrument is known as the "Preliminary Agreement." Immediately after the organization of the company it issued a circular stating its object to be to engage solely and immediately in the production of pig iron, and its intention to confine its expenditures to the least amount necessary to enter upon the production of the single staple of pig iron. On April 26, 1859, the Pioneeer Iron Company issued another circular, in which it was stated that the "cost of the two furnaces which it was thought advantageous to erect (instead of only one, as originally contemplated), together with other unexpected outlays, had increased the expenditures nearly $30,000 beyond the capital of the company." In May, 1857, the company had contracted for machinery, in June commenced the construction of its furnace, and when the 99-year lease was executed its construction was well advanced. Not long after its organization the company made some explorations on the lands in controversy, but,

Digitized by Google

discovering no ore of sufficiently good quality for use, abandoned further operations in that direction, and during its lifetime made no further effort to mine ore from its own lands for use in its furnace. The company became financially embarrassed in 1866; leased its own plant and all its lands and property, including the 99-year lease, to the Iron Cliffs Company, a corporation organized under the laws of this state. From that time the Pioneer Iron Company ceased to operate its furnaces. Shortly after the lease to the Iron Cliffs Company, that company acquired the entire capital stock of the Pioneer Iron Company, and continued to own it until after October 18, 1889. In 1867, the Legislature passed an act authorizing the Iron Cliffs Company to acquire and hold stock in any company formed for manufacturing pig iron, wrought iron, or steel. In September 10, 1874, the Iron Cliffs Company mortgaged all its property, including the capital stock of the Pioneer Iron Company. The debt secured thereby was paid in 1889. At various times from 1858 to 1877, Harvey conveyed by appropriate deeds various parcels of the lands to other parties. The Pioneer Iron Company also made several conveyances. From 1866 to 1890 the Iron Cliffs Company operated the furnace. Afterwards it was operated by the Cleveland-Cliffs Iron Company, a corporation organized under the laws of West Virginia, until 1894, when that company dismantled the furnace, and has never rebuilt it.

Complainants are the owners by mesne conveyances of the mineral interests and reservations remaining in James L. Reynolds upon the execution of his deed to Harvey, and of the interest of Harvey by foreclosure proceedings upon a mortgage executed by Harvey to complainant Edward Breitung, the father of the complainant Edward, execution sales against Harvey, and a quitclaim deed, executed by Harvey, of his interests in the lands. They and their lessees, beginning about 1870, have explored each 40-acre tract covered by the above 99-year lease, and have found ore on each tract upon which the defendants have entered for the purpose of exploration; have mined ore therefrom amounting to at least 3,000,000 tons, and have expended money thereon amounting to at least $700,000. These explorations were carried on openly and notoriously for more than 20 years. The charter of the Pioneer Iron Company expired by limitation in 1887. No steps were taken to reorganize it until 1889. On October 7, 1889, a special meeting of the stockholders of the company was called, and the continuance of its corporate existence directed for a period of 30 years from the expiration of its former term. This action was taken under an amendment to the Constitution. On October 18th articles of reorganization were executed, and filed in the office of the Secretary of State April 8, 1890. On January 9, 1900, a notice in the name of the Pioneer Iron Company was served upon the complainants that they had entered upon certain of the lands in controversy (describing them) for the purpose of exploring for iron ore "to be used in the furnaces of said company of the undersigned in said county, according to the grant made to it in the lease executed to the undersigned by Charles T. Harvey on the 17th day of September, A. D. 1857." Two similar notices were served later in regard to other lands. Thereupon, on March 9, 1900, complainants filed their bill in chancery, praying that the title to their lands be quieted, the title confirmed in them, and that the defendants be restrained from entering upon said lands to mine and remove ore. Answers were duly filed, proofs taken, and decree entered for the complainants.

Complainants, in their bill and brief, state their position as follows: "(1) That Harvey acquired the indivisible, but not the exclusive, right to mine, free of royalty, for the purposes indicated, during his lifetime. (2) That this special mining privilege was terminated and extinguished by a division of the estate, both Harvey and the Pioneer Iron Company having conveyed separate portions of the land to different parties. That, while Harvey's special privilege could be assigned as an entirety, it could not be cut up, and conveyed in separate parcels. (3) The 99-year lease provides that the lessee should not 'mine or remove any ores on said lands, except such as it shall actually convert into merchantable iron on its own furnaces and forges,' thus making the right appurtenant to said furnaces and forges. 'The furnaces and forges' referred to have long since been dismantled and abandoned. With their destruction and abandonment the incorporeal right to mine for their use ceased to exist. (4) The lease provides that the rights and easements mentioned shall 'descend to the corporate successors of the company, but not to its assigns.' The thirty-year corporate term for which the company was organized expired April 2, 1887, and all nonassignable incorporeal rights which it may have had at that time were thereby terminated. The company had no corporate successor. (5) That the Pioneer Iron Company did not for more than ten years next preceding the 2d day of April, 1887, carry on the business for which it was organized, and therefore was not authorized by Act 142 of the Public Acts of 1889 to reorganize. (6) The Pioneer Iron Company has not been reorganized in compliance with law."

The defendants deny these contentions, and insist that: "The deed of February 26, 1857, from Reynolds, conveys a fee-simple absolute to Harvey, 'his heirs and assigns,' not in the surface or part of the lands described, but 'in all the estate, right, title, interest, claim, and demand whatsoever' which Reynolds had therein. The clause referring to Contract A does not express an exception

Digitized by Google

to this grant, but merely relieves from the operation of the 'full warranty' of the deed the rights which the parties agreed in Contract A that Reynolds (not his heirs and assigns) should have, or at most amounts merely to a reservation to Reynolds of an incorporeal hereditament comprising certain undiscovered mineral rights, and the rights to acquire from Harvey, as owner of the fee, certain surface privileges by paying for them. The provisions of Contract A, properly construed with the deed, and as a part thereof, constitute an agreement between the parties to the deed, by which Reynolds (not for his heirs and assigns) reserved to himself, or, more properly, acquired back from Harvey, certain mineral rights and rights of acquisition during his lifetime in the lands which he granted by deed to Harvey and his heirs forever. By it Reynolds had an incorporeal hereditament (not a vested right in the land, for he had parted with all that), but a naked right to a share in minerals if discovered and reduced to possession, and a further naked right to buy back at a certain price such surface rights from Harvey as might be required to reduce such minerals to possession, if found. Harvey acquired no right by Contract A. The final proviso is not in any sense a grant from Reynolds, for he granted all he had in the deed. It merely defines the rights which Reynolds is reserving by explaining that his right to one-half the ore which may be discovered shall not require Harvey to account for ore which Harvey may use for manufacturing in Marquette county."

Frank A. Bell (Hoyt, Dustin & Kelley and Don M. Dickinson, of counsel), for appellants. S. W. Shaull (Arch B. Eldridge, Charles R. Brown, Benton Hanchett, and H. F. Pennington, of counsel), for complainants.

GRANT, J. (after stating the facts). 1. It is urged that this bill cannot be maintained, because its main purpose is to declare a forfeiture of the 99-year lease, and that courts of equity will not enforce a forfeiture. Counsel cite in support of this contention Funk v. Haldeman, 53 Pa. 229; Story's Eq. Jur. § 1319; Bispham's Prin. in Eq. § 181; Pomeroy, Eq. Jur. § 459; Crane v. Dwyer, 9 Mich. 351, 80 Am. Dec. 87; White v. Pt. Huron, etc., R. Co., 13 Mich. 356. The general rule is undoubtedly as stated in Funk v. Haldeman. The statement by the court was not necessary to a decision of the case. The court held that there was no violation either of tenure or covenants of the instrument which conveyed to Funk an incorporeal hereditament in fee, namely, the right to enter upon certain lands for the purpose of prospecting, boring, and taking away ore, oil, etc., out of the earth. The claim was that Funk had subdivided that which he could only hold in entirety, and had, therefore, lost all. At the close of the opinion the court said that, if Funk had lost his rights by the subdivision, "a chancellor would be likely to send the grantors into a court of law to enforce the forfeiture by ejectment; for equity does not, ordinarily, enforce forfeitures." The case does not hold that in no case of forfeiture may a court of equity interfere. Pomeroy states that those cases which appear to be exceptions to the rule are not so in reality. Bispham says, "In some cases, however, the enforcement of a forfeiture may be regarded in equity with favor." Crane v. Dwyer was an attempt to enforce in equity a forfeiture of a land contract, the vendee being in possession. The forfeiture sought to be enforced in White v. Pt. Huron, etc., R. Co., was similar. These cases are in accord with the general rule. See, also, Hodges v. Buell (Mich.) 95 N. W. 1078. The Supreme Court of Pennsylvania, in Brown v. Vandergrift, 80 Pa. 142, stated the doctrine to be that equity "abhors a forfeiture when it works a loss, but not when it works equity, and protects the landowner against the indifference and laches of the lessee, and prevents a great mischief." In that case the lessee agreed to keep his lease good by a payment of $30 per month until he should commence operations, and, failing to do so, the lease was forfeited. He paid for 3 months; then failed to pay or to commence operations for 11 months. He sought to continue his lease by tendering payment for the 11 months. Equity interfered, and declared the lease forfeited. In Eberts v. Fisher, 44 Mich. 551, 7 N. W. 211, this court, speaking through Mr. Justice Campbell, said: "There is no rule that equity will not recognize a forfeiture when it is only one of the incidents of a past transaction." In that case it was held that the lease involved had expired by its own limitation, and, until renewed, had lost any efficacy. Where a lessee has abandoned the premises, asserted no right under his lease for many years, and the lessor has been in exclusive possession, acting in apparent hostility to the lease, equity will interfere to prevent the lessee from afterwards attempting to take possession under the lease and asserting its existence. See Detlor v. Holland (Ohio) 49 N. E. 690, 40 L. R. A. 266.

The bill in this case alleges exclusive possession for more than 15 years in the complainants; an abandonment by the Pioneer Iron Company of the lease for nearly 40 years; that the Pioneer Iron Company was dead by reason of the expiration of its charter; that the right to mine ore conveyed by the lease to the Pioneer Iron Company was appurtenant to the furnaces which it was then erecting; that said furnaces were dismantled in 1894; that no other furnace has been erected since; and that said right to mine ore, conveyed by said lease, was personal to the Pioneer Iron Company, and incapable of assignment. We think, however, the main purpose of the bill is, not to declare a forfeiture of the lease, but to determine the rights of the parties, which depend largely

Digitized by Google

upon the construction of the deeds, the leases, and the various acts and conduct of the parties, extending over a period of more than 40 years, and to enjoin a continuing trespass. The case is one peculiarly appropriate to a court of equity.

The bill sets forth three notices in the name of the Pioneer Iron Company that it had entered upon the disputed lands for the purpose of mining iron ore. It is, therefore, apparent that numerous acts of trespass and the removal of valuable ore were threatened. The defendants are not in possession. The Pioneer Iron Company, through Mr. Duncan, its alleged agent, who is also agent and manager of the defendant companies, gave notice to the complainants that they had entered upon certain of these lands for the purpose of exploring for iron ore to be used in the furnaces, according to the grant made in the 99-year lease. Under this notice and all the others there was no claim of occupancy by the defendants or the Pioneer Iron Company by adverse possession. Whether or not, under these circumstances, ejectment would lie, we need not determine. Complainants being in possession of the property, if their title is valid, irreparable injury was threatened by the defendant. Such trespasses a court of equity will enjoin. Pomeroy's Eq. Jur. § 1357; Stone v. Roscommon Lumber Co., 59 Mich. 31, 26 N. W. 216; Hall v. Nester, 122 Mich. 141, 80 N. W. 982; Halpin v. McCune, 107 Iowa, 494, 78 N. W. 210; Campbell v. Kent Circuit Judge, 111 Mich. 575, 70 N. W. 141; Wolf Brick Co. v. Lonyo (Mich.) 93 N. W. 251; West Point Iron Co. v. Reymert, 45 N. Y. 703; Oolagah Coal Co. v. McCaleb, 68 Fed. 86, 15 C. C. A. 270.

2. It is also urged as a fatal objection to the maintenance of the bill that the Pioneer Iron Company is not made a party. Under the allegations of the bill, and as well under the proofs, the Pioneer Iron Company is used as a "dummy" for the benefit of the defendant companies. The defendants own, and have owned for many years, all its capital stock, its furnaces and property, both real and personal. They have managed all its affairs, and for their own benefit. All its accounts, if any have been kept in the name of the Pioneer Iron Company, have been kept upon the books of the defendants. The defendants refused upon the trial to produce the books of the Pioneer Iron Company, or their own books showing the accounts. Some of its officers having charge of the books were produced as witnesses, and testified to the above facts. Under these circumstances these defendants cannot escape the consequence of their acts done in the name of the Pioneer Iron Company for their own benefit. Admitting that the Pioneer Iron Company is not a dead corporation, yet all its property, franchise, and rights are owned by the defendant companies, so far as the rights under the 99-year lease are concerned, and are fully represented by those now before the court. The theory of the complainants, as stated in their bill, is that the Pioneer Iron Company is a dead corporation; its charter expired by limitation April 2, 1887; and that no steps were taken for some time thereafter to reorganize the corporation under the amendment to the Constitution and the law; and that that action was wholly invalid. The Pioneer Iron Company therefore was not a necessary party. 15 Enc. Pl. & Pr. p. 627; Hale v. Hale, 146 Ill. 227, 33 N. E. 858, 20 L. R. A. 247. Complainants could not well have made the Pioneer Iron Company a party defendant without recognizing it as an existing corporation. Its existence was in issue, and, having expired by limitation of its charter, the burden of proof was upon the defendants to show a valid reorganization, so as to make it the successor of the company within the terms of the 99-year lease. Equity will enjoin the threatened acts of those assuming to act within the name of a dead corporation. Atty. Gen. v. The Chicago & Evanston R. Co., 112 Ill. 520; Brooklyn Steam Transit Co. v. City of Brooklyn, 78 N. Y. 525.

3. The further answer to those objections to the jurisdiction of the court is that they should have been raised by demurrer. The facts upon which they are based are apparent upon the face of the bill. The defendants having answered, put the case at issue upon the merits, and taken proofs upon that issue, cannot now raise the question of jurisdiction. Wolf Brick Co. v. Lonyo, supra; Le Roy v. Platt, 4 Paige, Ch. 81; Livingston v. Livingston, 4 Johns. Ch. 290, 8 Am. Dec. 562; Waterloo Mining Co. v. Doe, 82 Fed. 45, 27 C. C. A. 50.

4. Construction of deed from Reynolds to Harvey. Whatever interests in the lands Reynolds reserved in himself which were assignable by him or descendable to his heirs, the complainants own by appropriate deeds. Whatever interests are not now vested in the Pioneer Iron Company by the 99-year lease are also owned by complainants by appropriate conveyances from Harvey. The first important question, therefore, is, what interest did Reynolds convey to Harvey, and what did he retain in himself? Defendants invoke the rule that deeds must be construed most strongly against the grantor. This rule cannot be invoked to defeat the intent of the grantor fairly gathered from the four corners of the instrument. Resort to this rule will only be had when other rules of construction fail. Swan v. Morehouse, 6 D. C. 228. Deeds are contracts, and when courts can ascertain from the deed itself the intent of the grantor, the deed will be construed so as to give that intent effect, and that intent will be carried out "as the mass of mankind would view it," and not in accord with the technical definition of the words. A dispute raised between parties as to the meaning of the language of an instrument does not of itself create a doubt so as to admit the ap-

Digitized by Google

plication of the rule defendants invoke. Therefore the definition agreement, dated February 9, 1871, between Reynolds and Harvey, specifically stating what interest Reynolds conveyed and what he retained (which agreement is referred to hereafter), does not of itself show a doubt as to the meaning of the deed which the court will recognize as a reason for applying the rule. If there is a doubt as to the meaning, courts will consider the situation of the parties, the subject-matter of the transaction, the acts, conduct, and dealing of the parties, in determining the meaning of any particular clause. These rules of construction have been recognized and applied by this court in many cases. Paddack v. Pardee, 1 Mich. 421; Norris v. Showerman, 2 Doug. 16; Bronson v. Green, Walk. Ch. 56; Vary v. Shea, 36 Mich. 397. It has often been held that to "reserve" means an exception, and to "except" means a reservation. These words are not controlling, but will be construed in the light of the entire language of the deed. If the grantor, no matter what the words may be, retains in himself title to a part of the land described in the deed, it is an exception. In such case words of inheritance are not necessary to retain in him the title for himself and his heirs. This is reasonable, because the deed did not purport to convey the title to the part excepted, nor to divest him of it. "Whatever is excluded from the grant by exception remains in the grantor as of his former title or right." Stockbridge Iron Co. v. Hudson Iron Co., 107 Mass. 321. Where, however, the language constitutes a reservation—i. e., "when the thing which is to be the grantor's comes back to him from the grantee in the nature of a grant"—such as rent, or other strictly incorporeal hereditament, words of inheritance are essential to constitute a title to the thing reserved beyond the life of the grantor. 3 Wash. (5th Ed.) 465; Lathrop v. Elsner, 93 Mich. 599, 53 N. W. 791, and authorities cited; Marvin v. Brewster Iron Min. Co., 55 N. Y. 538, 14 Am. Rep. 322; Sloan v. Lawrence Furnace Co., 29 Ohio St. 568; Whitaker v. Brown, 46 Pa. 197; Foster v. Runk, 109 Pa. 291, 58 Am. Rep. 720. The contract referred to in the deed is as much a part of the deed as if its provisions were incorporated in the deed, and the two will be construed as one instrument. Reynolds did not convey the entire fee to Harvey, and then repurchase by the contract a certain interest in the lands.

Applying the above rules, we find no difficulty in construing the deed. It is entirely clear that Reynolds intended to convey a certain interest in the land to Harvey, and to retain the residue in himself. He carved the estate into two parts, conveyed one, and retained the other. One of the express considerations is "reserving to himself an undivided half interest in and to all the minerals which have been or may be discovered on the premises referred to as conveyed." Again, in the proviso, where Harvey is required to account for ore mined and sold not for his own use or for manufacturing purposes, Reynolds' interest is described as "his joint half interest thereunder." This language is susceptible of but one construction. It clearly shows that Reynolds conveyed to Harvey the title to one half of the minerals, and retained the title to the other half in himself. The deed and contract were executed simultaneously. Harvey had nothing to grant till the delivery of his deed. When the deed was delivered, his contract was made a part of it, and he took only what the deed and contract, construed as one instrument, gave him. Reynolds burdened his half interest by conveying to Harvey the right to take without compensation any ore he might find and mine upon the premises for his own use or for manufacturing purposes, within the limits of Marquette county. Some question subsequently arose between Reynolds and Harvey as to the true construction and effect of the deed, and therefore, on February 1, 1871, they executed an agreement known as the "Definition Agreement," in which, among other things, it was "declared and agreed that by said deed James L. Reynolds conveyed to Charles T. Harvey, his heirs and assigns, the entire surface of the lands described and an undivided half of the minerals therein; reserving and excepting to the said Reynolds, his heirs and assigns, the other undivided half of said minerals, together with certain rights and easements in the surface as appurtenant to said mineral interest." This agreement was duly recorded March 4, 1871. It is not, of course, binding upon the defendants. It is, however, valuable as showing the understanding of Mr. Harvey, the witness upon whom the defendants largely rely to maintain their case, outside of their claimed construction of the instruments involved, without considering any extrinsic evidence.

In 1879 the Negaunee Iron Company filed a bill in chancery in the circuit court for the county of Marquette against Edward Breitung and others, asserting that "no estate of inheritance or other interest capable of being transmitted by inheritance, devise, or assignment" was reserved by or remained in said James L. Reynolds after the said conveyance to Charles T. Harvey of February 26, 1857, and prayed that the title of the complainants might be quieted as against the claims of Reynolds' heirs. Answer was duly filed, proofs taken, and the bill dismissed. The decree dismissing the bill was entered February 20, 1880. No opinion was filed, and the decree did not state the reason for dismissing the bill. The sole question, however, involved in the case was the construction to be placed upon that deed. It seems clear that the bill could not have been dismissed without determining this question.

Digitized by Google

No appeal was taken, and the parties to that suit—the complainants here—have evidently acted upon the faith of that decree, and have expended very large sums of money in the purchase of these lands, in exploration, and the erection of mining plants. Complainant Breitung bought certain interest for which he paid $45,000, and his father bought the interest of Reynolds' heirs for $55,000. Several mining corporations have been organized, and valuable mines opened by them, upon the faith of the validity of complainants' title. While that decision may not bind the Pioneer Iron Company and the defendants, yet it is entitled to great weight, as it stood unquestioned for 20 years, and must have been known to the officers of the Pioneer Iron Company and these defendants.

In 1889 the Arctic Iron Company filed a bill in equity against the Pioneer Iron Company, alleging the ownership by them as tenants in common of the minerals upon certain lands covered by the 99-year lease. The bill alleged that the Arctic Iron Company was the owner of the undivided half of the minerals, but that the title of said company was subject to the right of the Pioneer Iron Company to mine for its own use or for manufacturing purposes within the county of Marquette. In its answer the Pioneer Iron Company averred that its ownership was subject "to the right of the said complainant [the Arctic Iron Company] to an undivided half of all the minerals which may have been heretofore discovered thereon or may hereafter be discovered thereon." This is a direct and solemn recognition in writing that Reynolds retained the title in fee to one-half of the minerals by his deed to Harvey. Shortly before defendants served their notices in the name of the Pioneer Iron Company of entering upon said lands under the 99-year lease, they applied to complainants for options or leases, being refused which they attempted to enter under the 99-year lease. The conduct, therefore, of these defendants, is consistent only with the theory that they recognized the title to an undivided half of the minerals to be in these complainants.

5. The construction of the 99-year lease. By the deed from Reynolds to Harvey, Harvey acquired the sole right to mine for himself and his assigns, free of cost or compensation, for the purposes specified. The right was an incorporeal and indivisible hereditament in Reynolds' undivided half interest. It gave Harvey no title to the ore in place. The word "sole," in the term "sole right," is not used in the sense that it excluded Reynolds from the right to mine, for the deed expressly conferred that right upon him. It is descriptive of the right Harvey had in the ore, and excludes any other right thereto in him. The 99-year lease conveyed to the Pioneer Iron Company only an indivisible, incorporeal, and personal right to mine ore, and then only for such as it should actually convert into merchantable iron at its own furnaces or forges. It granted only certain rights and privileges for a specific purpose. It prohibited assignment and the mining of ore for furnaces not owned by the company. It was not exclusive of the right of Harvey, his heirs and grantees, to mine for ore. Such rights may be assigned or conveyed in entirety, but not in severalty. "They may be appurtenant to another piece of land; as, for example, to a furnace property." Barringer & Adams, Law of Mines and Mining, p. 53; Silsby v. Trotter, 29 N. J. Eq. 228; Gloninger v. Franklin Coal Co., 55 Pa. 9, 93 Am. Dec. 720; Harlow v. Lake Superior Iron Co., 36 Mich. 105, 121, and authorities cited; Van Rensselaer v. Radcliff, 10 Wend. 639, 25 Am. Dec. 582. Whether the effect of the conveyances made by Harvey to the Pioneer Iron Company and to others effected a division of this incorporeal hereditament, we find it unnecessary to determine, as the case will be disposed of on other grounds. Was this right to mine ore under this lease appurtenant to the furnace then existing? It is true that the lease itself does not in express terms limit it to the then existing furnace. We must, therefore, look to the situation of the parties, the object in contemplation, and the surrounding circumstances, in determining the question. The lease speaks in the present tense. The furnace, with its two stacks, was then in existence. If, instead of the lease, Mr. Harvey had made a contract on September 17, 1857, to supply the furnace or furnaces of the Pioneer Iron Company with iron ore sufficient for its use, clearly such contract would be held to mean the furnace or furnaces as it or they then existed. If A. enter into a contract with B. to supply B.'s flouring mills for a series of years with sufficient wheat to keep them running, and B. have two mills, clearly the contract would mean that A. should supply B. with wheat for the mills then erected, and not for the mills he might thereafter erect. The same rule would hold if B. obtain from A. the right for a series of years to enter upon A.'s land and raise wheat for use in his mills. Harvey and the Pioneer Iron Company were dealing with things as they existed, and not with things that might exist thereafter. The preliminary agreement executed at the same time of the deed by Harvey to the Pioneer Iron Company limited the right to use the ores mined "to its [the Pioneer Iron Company's] own establishment." A furnace may have one stack or more, in which case it is sometimes called furnaces and sometimes a furnace with stacks of a specified number. The Pioneer Iron Company's articles of association provide for only one furnace. It states the purpose for which the corporation was organized to be that "of procuring a suitable location for a manufactory, and lands to furnish coaling facilities therefor in the Upper Peninsula of the state of Michigan, and working the same for

Digitized by Google

production of merchantable iron." In each of the three written instruments, viz., the preliminary lease, the articles of association, and the 99-year lease, different terms are used interchangeably, meaning the same thing, viz., a furnace for the manufacture of pig iron. The circulars sent out by it on the formation of the company refer to but one furnace. If the above facts were insufficient to establish the character of the furnace with reference to which the parties contracted in the lease, its character is conclusively established by the contract made April 25, 1857, by the Pioneer Iron Company with the Jackson Iron Company, by which the latter agreed to supply the former with ore for the manufacture of pig iron. It was recited therein that the Pioneer Company proposed "to erect and build a blast furnace establishment of one or two stacks for manufacturing pig iron near the Jackson Iron Mine." Is it reasonable to suppose that Harvey intended to confer upon the Pioneer Iron Company the right to erect as many furnaces as it chose, and obtain ore for them all from this land? If this be the construction of the lease, then Harvey conveyed to the company the right to use all the ore found in his land, provided it could erect enough furnaces to use it. It is unreasonable to hold that such was the intent of the parties. The undoubted consideration for this lease was the exploration and development of iron ore upon the lands by the company, the discovery and development of which would redound to the benefit of the lessor. There must have been some consideration moving from this company to Harvey to induce him to make the lease, other than the nominal consideration expressed in it. The learned counsel for defendants attempt to show that the $25,000 paid for the deed was also the consideration paid for the lease. The record fails to establish any such claim. On the contrary, it conclusively appears that the standing timber upon the lands conveyed by the deed was then worth more than the $25,000, the consideration expressed therein and paid. Furthermore, Harvey, one of the company's incorporators, its agent and its witness, testified positively that but one furnace was in contemplation when the articles of association and the 99-year lease were executed. We therefore conclude that the Pioneer Iron Company contemplated, provided for, and erected only one furnace with two stacks; that the parties contracted with reference to that furnace; and that the mining right conveyed was appurtenant to the furnace.

6. By the voluntary act of the defendant companies, who, since 1866, operated it, the furnace was dismantled in 1894, and totally destroyed. It has never been rebuilt, and there evidently was no intention to rebuild it. The abandonment and destruction of the furnace also destroyed the appurtenant right to mine the ore under the lease. Nothing was left for the right to be appurtenant to. When the principle is destroyed, the appurtenant rights go with it; or, as one author puts it, "when the substance disappears, its shadow vanishes." Day v. Walden, 46 Mich. 575, 10 N. W. 26; Jones v. Van Bochove, 103 Mich. 98, 61 N. W. 342. The doctrine of abandonment is sufficiently discussed in these two cases and the authorities there cited.

7. Soon after the execution of the 99-year lease, the Pioneer Iron Company made some explorations upon certain portions of the land covered thereby, found ore, but not in paying quantities, abandoned the explorations, and for full 43 years made no other attempt to avail itself of this mining right. In 1866 it conveyed to the Iron Cliffs Company by lease for a period of 10 years "all its ironworks, buildings, lands, and rights," etc. (reserving, however, certain rights and privileges not necessary to mention), and provided by the lease that dividends should be paid directly to its stockholders, rather than into its treasury. The Iron Cliffs Company afterwards became the owner of all its stock, and thereafter carried on the furnace business. The Pioneer Iron Company never thereafter took any control of its furnace. It was regarded as merged in the Iron Cliffs Company. So notorious was this that in the year 1877 the commissioner of mineral statistics, in his first annual report, speaking of this company, said: "The Pioneer Iron Company, by whom the furnace was built, became subsequently merged into the Iron Cliffs Company." In subsequent reports it was referred to as "absorbed by the Iron Cliffs Company." The officers of the Pioneer Company thereafter neither made nor filed any reports as the law expressly required them to do. Meanwhile, commencing about the year 1870, the grantees of Reynolds and Harvey, through themselves and other parties, spent large sums of money in exploration, and discovered in subsequent years valuable deposits; mining corporations were formed, and leases made to them, and valuable mines developed by them; during all of which time the Pioneer Iron Company stood by in silence, asserting no right under its lease. Whether such nonuser amounted to an absolute abandonment under the rule in Day v. Walden, supra, we need not determine. That leases of this character may be abandoned and forfeited by nonuser is established in Porter v. Noyes, 47 Mich. 55, 10 N. W. 77, at least as to those who have purchased or leased from the lessor, entered upon the land, developed mines, and made valuable improvements. There is certainly force in the claim that the failure to use a personal, unassignable, and incorporeal right to take ore appurtenant to a furnace is abandoned by the failure to exercise that right for 43 years; especially where the right was once exercised and abandoned. Whatever may be the rule as between the lessor and the lessee where neither has taken any steps to exercise the right to mine, as between such lessee and subsequent lessees and grantees of

Digitized by Google

the lessor, who have in good faith expended large sums in developing mines, the lessee is estopped to assert his personal and incorporeal right. In an opinion obtained by the complainants in 1890 from Mr. W. P. Healy, a lawyer, who was once interested in these lands, he said: "I am also clear that the Pioneer Iron Company can never enter and appropriate the discovery of another. They cannot stand by until others have discovered a valuable deposit of ore, and then commence mining a portion of it"—which opinion meets our approval. The case of East Jersey Iron Co. v. Wright, 32 N. J. Eq. 248, is similar in many respects to this case, and the language there used is equally applicable here: "There are persons who will stand by and see large expenditures incurred in such operations, intending, if the venture turns out successful, to set up a claim, but, if otherwise, to have nothing to do with it. Such persons have no right to the aid of a court of conscience." The charter of the Pioneer Iron Company expired by limitation April 2, 1887. The Constitution, at the date of its organization and at the expiration of its charter, expressly prohibited the organization of corporations beyond the period of 30 years. No provision then existed, either by the Constitution or by the statute, authorizing a reorganization of corporations which had expired by limitation. A constitutional amendment was adopted in 1889, authorizing the Legislature to provide by general laws for one or more extensions of the term of such corporations, and also for the reorganization "for a further period not exceeding 30 years of such corporations whose terms have expired by limitation, on the consent of not less than four-fifths of the capital." Pursuant to this authority, the Legislature in 1889 passed an act authorizing such reorganization. 2 Comp. Laws, § 7035. Very important questions are raised by counsel as to the effect of this reorganization statute, the validity of the act of reorganization by the Pioneer Iron Company, as to whether the Pioneer Iron Company was in position to avail itself of this statute, and also the effect upon the 99-year lease should the reorganization be held to be valid. Inasmuch, however, as these questions are not essential to a decision of the case, we refrain from determining them.

Decree affirmed, with costs. The other Justices concurred.

COREY v. CITY OF ANN ARBOR.

(Supreme Court of Michigan. Sept. 15, 1903.)

MUNICIPAL CORPORATIONS—STREETS—DEFECTS—ICE—NOTICE—PRESUMPTIONS.

1. The time expiring between a Monday night, when ice formed on a sidewalk, until the succeeding Friday night, when plaintiff was injured by falling on the ice, was not sufficient to raise a presumption of knowledge of the defect on the part of the city officers in charge of the city streets.

2. That the president of the common council of a city lived on the opposite side of a street from a sidewalk on which ice was formed, and took a street car frequently in front of his house, was not sufficient to charge the city with notice of the defect.

3. A city clerk, who is required to keep the books and act as clerk of the board of public works of a city, is not an officer having charge of the city streets, so that notice to him of a defective street will constitute notice to the city.

Error to Circuit Court, Washtenaw County; Edward D. Kinne, Judge.

Action by Ratie E. Corey against the city of Ann Arbor. From a judgment in favor of defendant, plaintiff brings error. Affirmed.

Lehmann & Stivers, for appellant. O. E. Butterfield (John F. Lawrence, of counsel), for appellee.

HOOKER, C. J. The circuit judge who tried this cause directed a verdict for the defendant, and the plaintiff has brought the case to this court by writ of error. She was injured through a fall upon an icy sidewalk, the ice being occasioned by the freezing of water, which flowed upon the sidewalk from a hydrant upon the premises of an adjacent proprietor, according to the plaintiff's claim. Defendant's counsel maintain that it was not shown that she fell upon this ice, but we think there was testimony from which it might be inferred. The questions in the case are (1) whether the city is chargeable with notice, and an opportunity to repair, and (2) whether the statute imposes a liability upon a city in such a case. This is the second appeal, a former opinion being found in 124 Mich. 134, 82 N. W. 804. It was there held that, in the absence of proof that the condition of the walk was notorious, or of proof of actual notice, or that any of the city officers charged with the duty of seeing that the walks were kept in safe condition had been along the street during such time, the fact that the icy condition of the walk had existed from Tuesday to Friday would not justify an inference of notice which would warrant recovery. We discover no essential difference in the evidence upon the two trials as to the length of time that the ice was upon the walk. The opinion indicates that it was shown on the former trial that the water flowed on the walk and froze on Tuesday. It is now claimed that it occurred Monday night, and the accident was shown to have happened on Friday night in both trials. The difference is not such as to justify a holding that a presumption of knowledge might be found in one case, and not the other.

The case is said to be different upon this record in relation to notice. Counsel say that the jury should have been allowed to infer notice of the dangerous condition from the following testimony, viz.: The president of

1. See Municipal Corporations, vol. 36, Cent Dig. §§ 1648, 1652.

Digitized by Google

the council lived on the opposite side of the street from the place of the accident, and took a street car frequently in front of his house. Two patrolmen were frequently met and seen on Williams street, the street upon which the accident happened. Glen V. Mills, the city clerk, was seen to pass over this walk the day before the accident, and his wife was over the walk several times within a day or two before the accident. We have held that knowledge of highway officers, or those having the highways in charge, and upon whom rested the responsibility for their condition, would be a notice to the municipality, but none of the persons named is such an officer, unless it be the president of the council, and if he was such (which we do not decide), there is no evidence that he knew of the ice. Counsel urge that the jury should have been allowed to infer such knowledge from the fact that he resided, and frequently took the street car, opposite; but we think not. Counsel dwell upon the knowledge of the clerk, and insists that the duties imposed by law to keep the books and act as clerk of the board of public works, etc., make notice to him sufficient. This was passed upon before, as it was then shown that the clerk had been along the street, and it was urged then, as now, that this was notice to the defendant. It was said in the opinion: "It is not shown that any officer of the city, charged with the duty to see that the sidewalks were kept in safe condition for public travel, had been along this street during that time;" and this could not have been said if the clerk was such officer. No such duty or responsibility was shown on either trial. We think the learned circuit judge was right in saying that the testimony was substantially the same as upon the former trial.

The judgment is affirmed. The other Justices concurred.

MANEY et al. v. CASSERLY et al.

(Supreme Court of Michigan. Sept. 15, 1903.)

ADMINISTRATORS — FRAUD — CONCEALMENT OF ASSETS—HEIRS—BILL—EQUITY JURISDICTION—REMEDY IN PROBATE COURT—ACCOUNTING—PROFITS OF REAL ESTATE—WIDOW'S ALLOWANCE—LITIGATION—COSTS.

1. C. on the death of G. was appointed administrator of his estate, and thereafter, on a petition representing that G. left no lineal descendants, nor father, mother, brother, sister, nor issue of any brother or sister, obtained an order assigning the residue of his estate to his widow, and discharging him as administrator. On the widow's death C. was appointed her administrator, and falsely and fraudulently represented that her only property consisted of two city lots. He filed a final account showing that the estate was indebted to him in the sum of $348.76, but before hearing C.'s brothers contested the accounting, and alleged that C. had failed to charge himself with large sums which had been concealed in the house, and which came into his possession as administrator of G. and the widow, and in such litigation a decree was entered charging C.'s account with $23,774.72. After this complainants, who were the children of a brother of G., brought suit to recover one-half of his estate on the ground of fraud on the part of C. and the widow, joining C.'s brothers as parties defendants. *Held*, that complainants had no adequate remedy at law, and were entitled to relief in equity against G.'s administrator.

2. It was not a condition precedent to the complainants' right to maintain their bill that they should have first proceeded against the widow's estate in the probate court.

3. Where an administrator and a widow fraudulently concealed a portion of the intestate's estate, and fraudulently represented that intestate died without other heirs, and the widow's estate included a large part of the property to which complainants were entitled as heirs of intestate, who was their uncle, which had not been paid over to them, but which was intact, and within the reach of the court, for which the administrator had never accounted, complainants would not be denied relief on the ground of laches.

4. Where an administrator and an intestate's widow fraudulently concealed from the probate court that complainants were heirs of the intestate, and as such entitled to a one-half interest in certain real estate left by intestate, complainants were entitled to one-half of the rental value of such real estate from the time their bill was filed to the date of the decree, with interest allowed for the average time at 6 per cent., less the value of necessary repairs.

5. Comp. Laws, § 9322, subd. 2, provides that the widow of the deceased shall have such a reasonable allowance out of the personal estate as the probate court shall judge necessary for her maintenance. *Held*, that where the final account of an administrator showed $15,679.37 paid over to the widow as the only alleged heir, and $1,000 was deducted for her allowance, a contention that a further sum of $330 should be deducted for widow's allowance was not sustainable.

6. Where litigation between an administrator and his brothers brought into the estate $5,918, which was fraudulently concealed by the administrator, and certain heirs whose rights the administrator's brothers contested were entitled to share such fund, they were properly charged with a portion of the costs of such litigation.

Appeal from Circuit Court, Wayne County, in Chancery; Flavius L. Brooke, Judge.

Action by Ellen Maney and others against Patrick Casserly and others. From a judgment in favor of plaintiffs for less than the relief demanded, said plaintiffs and Patrick Casserly appeal. Modified.

Elisha A. Fraser (Jasper C. Gates, of counsel), for appellants Maney and Dean. Sidney T. Miller, for appellant Green. Bacon & Yerkes (Fred H. Aldrich and Tarsney & Fitzpatrick, of counsel), for appellant Patrick Casserly. Cornelius J. O'Flynn, for appellee Peter Casserly.

HOOKER, C. J. Andrew C. Green died intestate on October 3, 1895. His heirs at law consisted of his widow, Margaret Green, and the complainants, who were his nephews and a niece. On petition of the widow, her brother, defendant Patrick Casserly, was appointed administrator. On July 3, 1896, Patrick Casserly filed a petition praying that the residue of the estate be assigned to said Margaret Green, representing in said petition that she was entitled to it as widow and only heir of Andrew Green, and that said Andrew Green left him surviving no lineal

Digitized by Google

descendants, nor father, mother, brother, sister, nor issue of any brother or sister. Upon a hearing in probate court such an order was made, and the administrator was subsequently discharged from his trust. Margaret Green died November 9, 1896. Upon his own petition Patrick Casserly was appointed administrator of her estate. His inventory stated that her only property consisted of two city lots, and on September 10, 1897, he filed his final account, showing a balance of $348.76 due him as administrator from her estate. Defendants Peter and James Casserly, brothers of Patrick, were nonresidents of Michigan. They claim to have known nothing of the settlement of the estate of Andrew Green, but were informed by letter from Patrick of the death of Margaret about the time that it occurred. They were then or afterwards informed by Patrick that she left little, if any, estate. Upon coming to Detroit, they learned that Patrick's final account as administrator of her estate was about to be passed upon, and they entered upon a contest in relation thereto. It was claimed by them that Patrick had failed to charge himself with all of the property belonging to Margaret, and that he had found and taken into his possession, and not accounted for, large sums concealed about the house and under the floor, and also a sum hidden in a feather bed. No distinction was made between moneys belonging to Margaret and Andrew, for she had been adjudicated his sole heir, and his property was supposed to have been all turned over to her in obedience to the order of the probate court. If the Casserlys, or any of them, knew that this claim was a fraud—as we have no doubt one or more of them did—it was not to their interest to divulge the fact, and the case was disposed of upon the assumption that Andrew died leaving no kin, and that all left by him descended to his widow. Upon the hearing in probate court Patrick was found to owe the estate of Margaret $17,087.36. Appeals were taken to the circuit court by all of the Casserlys, where the amount was increased to $23,774.72, and the estate was assigned to the three Casserlys in equal shares. This decision was affirmed by this court. See 123 Mich. 44, 81 N. W. 930. The complainants were not parties to that litigation. After the decision in the circuit court, Peter and James Casserly began attachment proceedings against Patrick to recover their respective shares, and a levy was made upon some of his property, but before sale the bill in this cause was filed, asking a receiver, and the property was tied up by injunction. Ultimately, however, Patrick was allowed to pay into court a sum equaling five-sixths of the amount found in the administrator's hands, where it has since remained, in the custody of the register, drawing 3 per cent interest. It is stated in the briefs, and not denied, so far as we have been able to discover, that in the probate proceedings before the circuit court the court instructed the jury to charge Patrick with money found in the chimney and under the floor, but that the evidence was insufficient to establish the claim for money concealed in the bed. It is claimed also that an item of $65 for rent of real property, with interest, was included. The bill of complaint in this cause was filed September 12, 1898, by the complainants as the children of William C. H. Green, deceased, the only brother of Andrew C. Green, claiming one-half of Andrew C. Green's estate. They charge fraud upon the part of Patrick Casserly and Margaret Green in procuring the order assigning the residue of Andrew's estate to her, and ask that such order be vacated. They allege that a large sum of money belonging to Andrew Green came to the hands of Patrick, and was not accounted for to the probate court, and ask an accounting. Peter and James were joined as interested parties. The decree adjudged that the complainants are heirs of Andrew C. Green, deceased, and entitled to one-half of his estate, real and personal. The amount of personal property belonging to them was found and determined as follows, viz.:

One-half of the balance found due the estate of Andrew, according to the final account	$ 7,339 69
One-half amount found in house, and appropriated by Patrick Casserly	2,959 27
Int. on same at 3%	1,003 13
Total	$11,303 09
Also from Patrick Casserly one-half of money found in feather bed	2,525 00
Int. on same	482 38
Aggregate	$14,310 47

The decree made an allowance against the complainant of $750 to Peter Casserly by way of compensation in securing an allowance of said sum of $5,918.54 against Patrick in the probate case. It also determined the amounts due to Peter and James, each of whom received one-half of the remainder of the money in the hands of the register. Interest was computed at 3 per cent. from the date of filing the bill. The foregoing is not a complete statement of the entire decree, but is sufficient for the present purpose. The complainants question this decree in the following particulars: (1) Of money in court it is claimed that they should receive $13,148.34. (2) Against Patrick Casserly they claim one-half of the money found in the bed, and 6 per cent. interest, $5,565.23. One-half of $1,389.85 improperly allowed the administrator upon his account in probate court, with interest, $960.65. (3) One-half of the rental of the real estate, alleged to amount, with interest, to $1,206.51. (5) They question the propriety of requiring them to pay Peter Casserly $750 toward the expense of his lit-

Digitized by Google

igation with Patrick. The case presents the following questions:

(1) Whether the complainants are heirs at law of Andrew Green. (2) Whether they have commenced the proper proceeding for relief. (3) Whether they have been guilty of such laches as to preclude relief. (4) The amount for which Patrick and the estate of Margaret should be held accountable to them, if anything. (5) How much, if anything, should be allowed from the fund deposited. (6) Whether complainants should be required to contribute to the expense incurred by Peter in the litigation between the Casserlys.

1. Are the complainants heirs of Andrew Green? Although this may have been vigorously denied and disputed for a time, it admits of no doubt. It is conclusively proved, and is now conceded.

2. Are the complainants in the proper forum, and is the proceeding a proper one? Counsel for defendant Patrick Casserly say: (a) That equity is not the proper forum; (b) that complainant should have first proceeded against the estate of Margaret. The bill in this cause can be sustained upon the ground that the case involves fraud. It is difficult to avoid the conclusion that Margaret, if informed of the truth, participated in the fraud of Patrick. We say "the fraud of Patrick" advisedly, for, although counsel say that it is not proven that he knew of the existence of these heirs, it is not probable that he was ignorant of the fact that Andrew Green had a brother, which fact Margaret would naturally know. We find no satisfactory evidence of any attempt to reach him or his heirs, though there are large charges for expenses at Woonsocket. But if we would otherwise entertain any doubt of the fraudulent concealment of the death of Andrew from his heirs, the conduct of Patrick in denying that there was anything in the estate of Margaret, his failure to account for money found upon the premises, and the conversion of it to his own use, in connection with his attempt to cheat his own brothers out of their shares, stamps the entire transaction, so far as he is concerned, as fraudulent. We have no doubt that equity has jurisdiction in such cases. Rights have accrued under the orders of the respective courts, in the probate proceedings, which can only be divested by a proceeding like this. Smith v. Boyd, 127 Mich. 417, 86 N. W. 953. Through fraud on the part of Patrick, and mistake, if not fraud, on the part of the other Casserlys, Andrew's estate has finally been ordered distributed to persons who are not his heirs, to the exclusion of the true heirs. Those courts cannot correct their decrees and orders, and equity is the only tribunal that can bring all of the parties together, and put an end to the matter, by doing full and complete justice to all concerned.

We see no occasion for any proceedings in probate court as a preliminary to this bill. The estate of Andrew is closed, and the property was turned over to Margaret, and has come to the possession of her administrator, and the administrator of Andrew has been discharged. Margaret has died, and her estate has been administered to the point of finding a final balance in the hands of her administrator, and ordering it distributed; such final order having been affirmed by this court in ignorance of the true heirs of Andrew and their rights. Now, it transpires that of this fund a large portion was never the property of Margaret, although disposed of by an order which the probate court cannot open, while Patrick is found to have a large sum belonging to Andrew Green, for which he never accounted to either estate. There is no adequate remedy in the probate court. The contention that the complainants should file a claim against Margaret's estate for this money—especially that found in the feather bed, which was converted by Patrick, and never became a part of Margaret's estate—does not impress us as just. We see no reason for asking the heirs of Margaret to make good the embezzlements of Patrick, simply because he chances to be the administrator of Margaret's estate; and while, as to the other moneys which have become a part of her estate, it may be that, had a claim been seasonably filed, relief might have been had in that way (which we do not decide), it was presumably too late to present claims when this suit was begun, and we have no doubt of the jurisdiction of equity in view of the attendant circumstances of the transaction.

3. Should the complainants be denied relief upon the ground of laches? Counsel for Peter Casserly strenuously urges this point. We have examined it, and the evidence said to show culpable negligence on the part of the complainants in not discovering Andrew's death earlier, and feel that it would be unjust to apply such a rule. It is plain that Margaret's estate includes a large part of complainants' share of their uncle's estate. There is no equitable reason for giving it to the Casserlys. It has not been paid over to them, and, so far as appears, is intact, and within reach of the court. Beyond this, Patrick has a large sum that he has never accounted for, if there is any truth in the story about the money found in the feather bed. Why he should not justly account for this in this or some other proceeding does not satisfactorily appear. We think he should. We appreciate the contention that equity should not be used as an appellate court to review probate and other proceedings, especially proceedings at law; and not only is such appellate jurisdiction not entertained in this case, but the jurisdiction of equity is ample in this case because of the fraud which has been practiced in and upon such courts and these complainants, which is a proper subject for equitable cognizance. In

this connection we may add that the statute providing for appeals from probate courts has no application. This is not an appeal. There is, therefore, no force in the claim that the suit is barred by a statute of limitation.

4. How much should Patrick and the estate of Margaret be held accountable for to the complainants? The discussion of this question may call for allusion to some additional facts not hitherto stated.

(a) The real estate. There can be no doubt that the complainants are entitled to an undivided half interest in the real estate of Andrew Green, as the trial court held. Upon the death of Andrew it descended to Margaret and the complainants in moieties. They became tenants in common, and there is perhaps nothing that would justify us in saying that Margaret ousted them, or denied them their rights therein; and we do not discover anything that shows that her estate received the rents and profits; and we fail to find that complainants make a claim for rent accrued, though they do claim one-half of the rental value, while their rights were denied by defendants. We think that they are entitled to this from the time that their bill was filed, viz., December 12, 1898, to the date of this decree. The rental value was shown to be $28 per month, one-half of which is $14, and the computation should be made upon that basis. This would amount to $770. Interest should be allowed for the average time at 6 per cent., which amounts to $101.70, and from the aggregate —$871.70—should be deducted the sum of $50, which we estimate to be the value of necessary repairs, leaving a total of $821.70 for this item.

(b) The account in the Andrew Green estate. The final account in the Andrew Green estate, as allowed, shows $15,679.37 paid over to Margaret Green. Of this, $1,000 should be deducted as and for her allowance. It is claimed that a further sum of $330 should be deducted for allowance, but we think Comp. Laws, § 9322, subd. 2, is a sufficient answer to this claim. Deducting this $1,000, leaves the total amount received by Margaret as heir and distributee, $14,679.37, one-half of which, $7,339.69, rightfully belonged to the complainants. This sum is a rightful charge upon the estate in the hands of her administrator.

(c) The next item consists of various sums of money found by Patrick about the house, under the floor, etc., exclusive of money alleged to have been found in the feather bed. This subject was litigated between the Casserlys, and was included in the amount found to be due to Margaret's estate from Patrick, the administrator, forming a part of the verdict for $23,774.72 as a balance due the estate, and which was ordered distributed among the Casserlys. The learned circuit judge who heard the cause found this sum to have been $5,918.54, and we think the testimony in this cause supports that finding. One-half of this sum justly belonged to the complainants. Margaret never received this. It was concealed and withheld by Patrick, but it was brought into her estate by the proceedings affirmed by this court, together with the interest at 6 per cent., and was included with such interest in the fund brought into court.

(d) Upon the hearing of the final account in the estate of Margaret her heirs also insisted that Patrick, the administrator, should be charged with a sum of money found in a feather bed, alleged to have been $8,000. They were not successful in establishing that claim, and the judge took the question from the jury upon the ground of an absence of proof. That decision does not preclude the complainants from trying the question here. The trial court included in his decree in favor of the complainants the sum of $5,565.23 for such money, including 6 per cent. interest from the date of the conversion. We think that the complainants are entitled to one-half of the full sum of $8,000. The interest question will be considered later.

(e) In the estate of Andrew the sum of $1,389.55 was allowed the administrator. The court in this cause was asked to review this, and disallow the item, but refused to do so. While the conduct of Patrick arouses suspicion that some of these items are excessive, if not fraudulent, it is not very clearly shown. The order will not be disturbed in this respect.

Recapitulation.

We find complainants entitled to the following:

(1) One-half of the real estate.

(2) One-half of the personal estate of Andrew as follows:

(a) Rent	$ 821 70
(b) Money reported A. G. estate	7,339 69
(c) House and suppressed	2,959 27
(d) Feather bed money	4,000 00
	$15,120 66

5. How much should be allowed from the fund deposited? It is apparent that some of these items should be paid from the estate of Margaret, represented by the deposit with the register, while at least one should be a charge against Patrick only. The items $7,339.69 and $2,959.27 were included in the verdict, with interest at 6 per cent. to the date of the verdict, and an amount sufficient to cover them, with such interest to the date of deposit, is in the hands of the clerk. The rent of the real estate is a charge against Patrick, Peter, and James, because they have withheld the premises from complainants, and denied their right during this litigation, and two-thirds of the amount may properly be charged against them and the fund belonging to them. On the other hand, the feather bed money never found its way into the assets of Margaret's estate, and is not included in the deposit. It should not be a charge agai-

Digitized by Google

the estate of Margaret, or against Peter or James, but should be a charge against Patrick.

6. Interest. Interest on the first two items is computed to the date of the deposit at 6 per cent. It amounts to $13,148.34, and is a charge upon the fund in court. From that date it shares in the earnings of the fund. The rent money, having been withheld by the three Casserlys, is chargeable against them. Two-thirds of it, viz., $547.80, should be a charge upon Peter's and James' shares of said fund. The other one-third, $273.90, cannot be a charge against that fund, for the reason that one-sixth of the balance due the estate of Margaret—i. e., Patrick's share—was not deposited. It is a charge against Patrick, however. The interest to July 28, 1903, is included. After that date it should draw interest at the legal rate to the date of decree, and rent at $14 per month should be added for the time intervening between that date and the date of decree. The first two items, with interest, being included in the deposit, which was made with the approval of the complainants, will draw their proportionate share of the earnings of the fund. The feather bed item will draw interest at 6 per cent. from October 3, 1895, the date of Andrew Green's death, to the date of the decree in this cause.

7. The $750 item. The complainant complains of the provision of the decree whereby they are charged with a share of the expenses incurred by Peter in his litigation with Patrick in the matter of Margaret's estate, which, as we have seen, was a protracted matter, ending only when this court set it at rest. That litigation brought $5,918 into Margaret's estate, which the complainants share. It is true that it was not done in their interest, and that Peter and James have contested their claims to any share in such estate, but they have shared in the benefits derived from that litigation. The circuit judge was of the opinion that equity required complainants to contribute to such expense, and charged them with $750 thereof. We will not disturb his finding in that regard. The defendants Peter and James are entitled to the remainder of the deposit after satisfying the claims of the complainants as allowed against it and them, one-half to each, less $600 to Peter and $100 to James, as provided by the decree in the circuit court. Each is entitled to an undivided sixth of the real estate. They are not entitled to a decree against Patrick for a share of the money found in the feather bed; that question being res adjudicata as to them.

A decree may be taken in accordance with the views herein expressed, the decree of the circuit court being affirmed in all particulars except as modified by this opinion. The complainants will recover costs.

CARPENTER, J., did not sit. The other Justices concurred.

PEOPLE v. BARLOW.

(Supreme Court of Michigan. Sept. 15, 1903.)

PAUPERS—RESIDENCE—REMOVAL—OFFENSES—DEFENSES.

1. A non compos mentis pauper was taken by a family residing in L. county when she was 10 years old, and soon after removed with them to J. county. She lived with her foster parents until they died, when a guardian was appointed for her by the probate court of J. county. She lived with such guardian until 1899, when, under an agreement between the guardian and H. for her services, she went to live with H. in L. county, where she resided for two years, when she returned to her guardian, with whom she remained until money left to her by her foster parents was exhausted, when she was sent to the poorhouse of J. county. *Held*, that the pauper's legal residence was in J. county.

2. In a prosecution of a keeper of a county house for illegally removing a pauper to another county than that in which she had a legal residence, it was no defense that such removal was in obedience to an order of the superintendent of the poor of the county from which the pauper was so removed.

Error to Circuit Court, Lenawee County; Guy M. Chester, Judge.

John Barlow was convicted of illegally bringing a pauper into a county other than that in which she had a residence, and he brings error. Affirmed.

Forrest C. Badgley and Charles H. Smith, for appellant. Theodore M. Joslin, Pros. Atty. (James N. Sampson, of counsel), for the People.

HOOKER, C. J. Section 4514 of the Compiled Laws provides: "Any person who shall send, carry, transport, remove or bring, or who shall cause or procure to be sent, carried, transported, removed or brought any poor or indigent persons from any township, village, city or county, into any other township, village, city or county, or from any other state or country into any county in this state, without legal authority, and there leave such poor persons, or who shall entice such poor person so to remove, with the intent to make such county, to which the removal shall be made, chargeable with the support of such pauper, shall be deemed guilty of a misdemeanor, and on conviction thereof, shall be imprisoned in the county jail not exceeding three months, or fined not exceeding one hundred dollars, or both such fine and imprisonment in the discretion of the court." The appellant was keeper of the county house in Jackson county, and was convicted, under the statute quoted, upon a charge of having taken, sent or removed one Harriet Marsha, a poor and indigent person, from Jackson county, Mich., into the township of Woodstock, Lenawee county, without legal authority, and of having left her with the intent to make the said township chargeable with her support. The respondent was first tried and convicted before a justice of the peace in Lenawee county, and afterwards in the circuit court for said county. Upon the

Digitized by Google

last trial the prosecuting attorney introduced evidence tending to show that Harriet Marsha was taken by a family named Ambler, then residing in Lenawee county (with whom she soon after removed to Jackson county), when she was a young girl, about 10 years old, from the county house, or from persons who brought her into the county, as an indigent child. That was 40 or 50 years ago. She lived with the Amblers for many years, and until they died. She was left $75 by the will of Mrs. Ambler, and one Fish was appointed her guardian by the probate court for Jackson county. She afterwards lived with Fish until 1899 or thereabouts, when John Hull came to procure her services as help in his family. He made a bargain with reference thereto with her guardian, and she lived at his house in Woodstock, Lenawee county, upwards of two years, when she was returned to Fish, where she remained until her money was exhausted, when, upon the order of the supervisor, she was sent to the poorhouse in Jackson county. The officers of the poor learned that she had lived with Hull in Lenawee county, and, doubtless, of her earlier residence there. The subject was brought to the attention of the board of superintendents of the poor of Jackson county, which directed the chairman to go to Woodstock and investigate the matter, which he did, and made a report, whereupon the board determined to and did instruct Mr. Barlow, the defendant, to return the woman to Mr. Hull or the supervisor. This was upon the claim that she was a charge upon Lenawee, and not upon Jackson, county. The defendant claimed that he did not know that Mr. Hull lived in Lenawee county, and it is urged that this fact, and the fact that he acted under orders of the superintendents of the poor, constituted a defense, for the reason that it indicates legal authority and absence of unlawful intent. It is not disputed that he learned before he left Hull's, if he did not know before, that Hull lived in Lenawee county. The court left the question of her residence to the jury; also the question of defendant's intent and authority.

Defendant's counsel contend: (1) That the judgment should be reversed for the reason that when the people rested a prima facie case had not been made out. (2) That under the law Miss Marsha was a resident of Woodstock. (3) That Lenawee county was the domicile of origin of Miss Marsha; that she was always non compos mentis, and the burden could not be shifted to Jackson without showing that she removed with her legal parents. (4) That at all events she was a nonresident of Jackson county, and a resident of Woodstock, with the consent of her guardian. (5) If she was a resident of Woodstock, it was the duty of the superintendents of the poor of Jackson county to send her there. This they did, through Mr. Barlow, who acted under legal authority—i. e., instructions from his superiors—without intent to violate the law.

In our opinion, there was a prima facie case made out by the people. Defendant did not rest upon his motion, however, but offered testimony which tended to strengthen the people's case in some respects. In such a case the determination of this question involves all proof. The undisputed testimony would have justified an instruction that Miss Marsha was a charge upon Jackson county. While possibly an incompetent, the testimony indicates that she lived with foster parents from childhood until their death. They made some provision for her by will, and she remained at the place of their domicile. Under the circumstances the jury could not do otherwise than find, and the court might have instructed them, that she acquired a residence in Jackson, with them, and did not lose it through her employment by Mr. Hull.

We are not aware that any law of this state requires the keeper of a county house to obey the order of the superintendents of the poor to transport inmates of his house to another county, and, if he does so, he is equally liable with them, if he transgresses the law. The subjects of his authority and his good faith were left to the jury, which found against him. We think it unnecessary to refer at length to other alleged errors. None of them could well have injured the defendant in the view we have taken of the case.

The judgment is affirmed. The other Justices concurred.

DOYLE et al. v. PELTON et al.

(Supreme Court of Michigan. Sept. 15, 1903.)

LOGS AND LOGGING—FLOATING LOGS—SEPARATION OF LOGS IN STREAM—SERVICES—STATUTES — CONSTRUCTION — ASSUMPSIT — PLEADING—AMENDMENT.

1. Comp. Laws 1897, § 5075, provides that if any person shall put into any river any logs, and shall not make adequate provision for breaking jams, or for clearing the same from the banks of such river, and shall thereby hinder the running of any logs, it shall be lawful for any other person engaged in floating logs to cause such jams to be broken, and such logs to be cleared from the banks of such river, at the expense of the person owning the same. *Held*, that merely moving logs which filled the channel of a river aside, so that plaintiffs' logs, which were further up the river, could be driven through, was not equivalent to breaking a jam and driving the logs, and hence plaintiffs were not entitled to recover therefor, under the statute.

2. Where an owner of logs farther up a river moved defendants' logs, which were in the river below, to one side, so that plaintiffs' logs could be driven through, such act did not confer a benefit on defendants, so as to entitle plaintiffs to recover therefor in assumpsit.

3. Where an action was brought on the common counts in assumpsit, it was not error for the court to refuse to permit plaintiffs to amend their declaration, so as to add a count for a tort.

Error to Circuit Court, Cheboygan County; Frank Shephard, Judge.

Action by William H. Doyle and another against David C. Pelton and another. From

¶ 3. See Pleading, vol. 39, Cent. Dig. §§ 707, 711.

Digitized by Google

a judgment in favor of defendants, plaintiffs bring error. Affirmed.

Cross & Harpster, for appellants. Frost & Sprague, for appellees.

CARPENTER, J. Under a declaration on the common counts in assumpsit, plaintiffs sought to recover, in the circuit court for the county of Cheboygan, for expenses incurred in moving logs of defendants in the channel of Pine river, in the counties of Mackinac and Chippewa. The testimony of plaintiffs tended to show that in order to use said river for the purpose of floating their own logs, they were compelled to and did move the logs of defendants; that they did not drive defendants' logs, but simply moved them to one side, so as to make a channel, through which their own logs could pass. It was the claim of plaintiffs that, by reason of the above-mentioned facts, a cause of action accrued in their favor against defendants, which, according to section 5075, Comp. Laws 1897, could be enforced under their declaration. The trial court decided that this cause of action could not be enforced under a declaration on the common counts in assumpsit, and directed a verdict for the defendants.

This decision was correct, not only for the reason that plaintiffs should have stated in their declaration the facts which constitute their cause of action (see Chicago & Northeastern R. Co. v. Sturgis, 44 Mich. 538, 7 N. W. 213; Anderson Carriage Co. v. Pungs [Mich.] 95 N. W. 985), but also for the reason that plaintiffs' cause of action could not be enforced in an action of assumpsit. The case of Chapman v. Keystone Lumber & Salt Mfg. Co., 20 Mich. 358, is not applicable. In that case it was decided that plaintiff, who in order to drive his own logs was compelled to, and did, break a jam of logs made by defendant, and drive said logs, was entitled, by section 5075, Comp. Laws 1897, to recover his expenditure in an action of assumpsit. The section relied upon reads as follows: "If any person or persons shall put or cause to be put into any * * * river * * * of this state, any logs, * * * and shall not make adequate provision and put on a sufficient force of men for breaking jams of such logs, * * * or for running, driving or clearing the same from the banks or shores of such * * * river * * * and shall thereby * * * hinder or delay the running of any logs, timber, lumber, cedar poles or other forest products in such waters, it shall be lawful for any other person * * * engaged in floating logs, timber, lumber or other forest products in such * * * river * * * to cause such jams to be broken and such logs * * * to be run, driven and cleared from the banks of such * * * river * * * at the cost and expense of the person or persons owning the same; and such owner or owners shall be liable to the person or persons * * * doing or causing such work to be done, for such costs and expenses." Subsequent language of the statute gives the person doing the work a lien on said logs for his charges, and the right to their possession until said lien is satisfied. All that the plaintiffs in this case did, as heretofore stated, was to move the logs aside, so as to make a channel, through which their own logs might be driven. We cannot hold that this is the work specified in the statute. Merely moving the logs aside is not the equivalent of breaking the jam and driving the logs. The work of driving the logs is beneficial to their owner. It is no benefit to him—indeed, it may be injurious to his interests—to move them to one side of the stream in which they lie. One who seeks the advantages of this statute should perform its obligations. It was held in the case of Chapman v. Keystone Lumber & Salt Mfg. Co., supra, that the obligation of the owner of the logs to compensate the plaintiff might be enforced in an action of assumpsit, "under the theory of a promise to pay, adopting the conclusive presumption that every man promises to pay what it is his legal duty to pay," or, as stated in the case of Woods v. Ayres, 39 Mich. 345, 33 Am. Rep. 396, because "the statute simply imposes the duty to pay." The statute does not impose upon the owner of logs the duty to compensate plaintiffs for merely making a passageway through those logs. If any such obligation exists, it arises under the principles of the common law, and not by virtue of the statute. It cannot, therefore, be claimed that the statute provides any remedy for the plaintiffs' grievance. That remedy must be found in the principles of the common law. According to those principles, an action on the case for a tort is the appropriate remedy, if plaintiffs have any grievance whatever.

It follows from this reasoning that the court did not err in refusing to permit plaintiffs to amend their declaration, for the court did not possess power to permit plaintiffs to add a count for a tort to the common counts in assumpsit. See People v. Wayne Circuit Judge, 13 Mich. 206; Chitty on Pleading, pp. 108, 109.

The judgment of the court below must therefore be affirmed. The other justices concurred.

CITY OF LINCOLN v. MILLER.

(Supreme Court of Nebraska. Dec. 18, 1901.)

CITIES—DEFECTIVE SIDEWALKS—NOTICE OF INJURY—EVIDENCE.

1. Notice that an injury occurred on the sidewalk along the east side of block 54, between two named streets, is, in the absence of any demand for more definite location, a sufficient location of the place in a notice to the city under section 36, c. 13a, Comp. St. 1897.

2. Evidence *held* sufficient to warrant submission to the jury of question whether the defects in the sidewalk were so obvious and of so long continuance as to warrant presumption of notice.

¶ 1. See Municipal Corporations, vol. 36, Cent. Dig. § 1702.

Digitized by Google

3. Instructions as a whole *held* to properly submit this question.

4. Instruction that notice to "any of the municipal authorities" was sufficient *held* not prejudicial, where no evidence was introduced or tendered of notice to any but the street commissioner and the sidewalk inspector, and jury were cautioned to find no notice except as shown by the evidence.

Commissioners' Opinion. Department No. 1. Error to District Court, Lancaster County; Holmes, Judge.

"Not to be officially reported."

Action by Nehemiah P. Miller against the city of Lincoln. Judgment for plaintiff, and defendant brings error. Affirmed.

J. R. Webster, John P. Maule, and D. J. Flaherty, for plaintiff in error. Strode & Strode, for defendant in error.

HASTINGS, C. Action to recover for injuries sustained by a fall upon a sidewalk. From a verdict and judgment for plaintiff, the defendant, city of Lincoln, brings error, and complains, first, that the necessary claim under section 36 of the city charter (Comp. St. 1897, c. 13a), was never filed in the office of the city clerk; second, that the court erred in instructing the jury that, if the defect in the walk had existed such length of time that the city in the exercise of reasonable care might have had notice of it, notice should be presumed. It is further claimed that the court erred in assuming in its instructions, and telling the jury, that notice to "any of the municipal authorities" was sufficient. The last clause of the section of the city charter in question is as follows: "To maintain action against the city for any unliquidated claim it shall be necessary that the party file in the office of the city clerk within three months from time right of action accrued a statement, giving full name, time, place, nature, circumstance, and cause of the injury complained of." This provision of the charter is held, in City of Lincoln v. Grant, 38 Neb. 369, 56 N. W. 995, to be in the nature of a condition precedent to the right to prosecute an action for damages, and statement of compliance with it necessary to show a cause of action. In this case, it was sought to be complied with by means of the following notice:

"To the Honorable Mayor and Council of the City of Lincoln: The City of Lincoln, To Nehemiah P. Miller, Dr. $5,000.00. Nehemiah P. Miller, claimant herein, represents unto the honorable mayor and council of the city of Lincoln, Nebraska, that on or about the 7th day of May, 1897, claimant, while exercising all reasonable care and caution, and without fault on his part, fell on the sidewalk in the city of Lincoln, on the east side of 9th street, between N and O streets, being on the west side of block 54, and received severe and dangerous injuries to his right arm and shoulder and right side; that the sidewalk at the place where claimant fell and received injuries was in an unsafe and dangerous condition. Claimant says that he has suffered injury by reason of said injuries so received in the amount of $5,000.00, and hereby presents his claim against the city of Lincoln and asks that it be allowed."

Plaintiff claims that this was amply sufficient, so far as the place is concerned, under the decisions of this court. Lincoln v. O'Brien, 56 Neb. 761, 77 N. W. 76, and Lincoln v. Pirner (Neb.) 81 N. W. 846. In the former case there is an extensive review of the decisions of other states in reference to the precision required in such a notice, and in that case the conclusion was reached that an allegation that the injury occurred by stepping in a hole in the sidewalk on the north side of Q street, between Eighteenth and Twentieth streets, was sufficiently definite, since it nowhere appeared in the evidence that there was more than one hole along such sidewalk. In the latter case, a statement that the accident occurred "in front of lot 13, in block 45, on P street, in the city of Lincoln, near the west side of what is commonly known as the 'Carr Block,'" was held sufficient, notwithstanding an error in the number of the block, which should have been 34, instead of 45. It is stated that the rule of construction to be deduced from the adjudged cases is that, "if the description given and the inquiries suggested by it will enable the agents and servants of the city to find the place where the accident occurred, there is a substantial compliance with the law." In that case the "Carr Block" was a well-known building in the city of Lincoln. Proof of this notice now under consideration was objected to, on the ground that the names of no witnesses were indorsed, and that it did not give the place of the injury with certainty. It is not now urged that the names of witnesses are necessary, and the only objection which can be considered is that it does not with sufficient definiteness describe the place of the injury. There is nothing in the notice, when applied to the evidence, that renders it more definite. It appears that, between the alley running east and west through block 54 and N street on the south, there are six lots abutting upon Ninth street, according to the subdivisions of the city plat. North of the alley there is but a single one, extending 142 feet to O street. It appears from the evidence that the plaintiff's fall was north of the alley. It appears that all along this walk there were loose planks. The question presented by this objection is simply and wholly whether the complaint that he was hurt along the east side of this 300-foot block is definite enough to comply with the charter.

It is to be said that neither of the cases from this court, cited by plaintiff as conclusive, go as far as we are asked to go in this instance. In the O'Brien Case the position of the hole served as a definite location, and

Digitized by Google

in the Pirner Case the west side of the "Carr Block." The decision in each of those cases is simply that a statement by the use of which the officer could, by making suitable inquiries, locate the precise spot of the accident, is sufficiently definite, and the meaning is that in these descriptions, as in others, inquiries must be such as the terms of the notice itself suggest, and for which it furnishes the starting point. We are, however, cited to the case of Wheeler v. Detroit (Mich.) 86 N. W. 822. That case holds that a description similar to this, but more indefinite, that is, "a walk on the east side of Fifteenth street, betwen two others," is sufficient, on the ground that the court probably took judicial notice that there was only one block intervening between the two streets, and a description locating the accident along one particular block should be held sufficient, as the council did not ask for more specific information, but acted on the claim without objection upon that ground. Such is also the condition in this case, with the advantage, in favor of this description, that we have the positive statement that only one side of a single block is included. Doubtless it would have been competent for the city council to call for more exact information, and their standing to complain would be much stronger had this been done and plaintiff had refused it. If this provision of the charter is to have, as is suggested in Lincoln v. Pirner (Neb.) 81 N. W. 846, a liberal interpretation, this description should probably be held sufficient, in the absence of any call for a more definite one.

It is argued that there is error in the instruction of the court No. 3, that the jury might find the city had notice if they found that the walk had remained in a defective and dangerous condition for such length of time that the city in the exercise of reasonable care might have had notice of it; and in No. 7, where the jury were told that notice would be presumed, if they found and believed from the evidence that the sidewalk in controversy remained for a considerable length of time in so defective a condition that it was unsafe to travel over. It is claimed that the defect in the walk, if any, was latent; that it was apparently sound and strong; that plaintiff was injured by a plank coming loose when stepped upon by another person; and that the presumption of notice only arises when the defect causing the injury is an obvious one. Counsel for the plaintiff say that the proof of actual notice of the defect in the walk is so complete that this instruction in any event could not have been prejudicial. A somewhat careful examination of the evidence does not disclose this. There is considerable conflict in the testimony with regard to both the actual and apparent condition of the walk. There is testimony that the walk had been examined and repairs ordered and made from time to time, but it cannot be claimed that there was undisputed evidence of actual notice of the particular defect which caused this injury; and the court, in giving this instruction No. 3, and again, substantially, in Nos. 6 and 7, evidently regarded the doctrine of presumptive notice as being important in this case.

The outer half of the walk seems to have been condemned shortly after the injury, for the reason that there were no sleepers under the planks, that they were simply laid down loosely on the ground. The evidence, however, is conflicting as to whether the walk was visibly defective, one, at least, of defendant's witnesses testifying that the walk did not look as if it was "exactly fit to walk upon." The evidence warranted the submission to the jury of the question of whether or not the walks were in such a defective condition that the defendant and its officers were bound to take notice of it, and in the eighth instruction the jury were told that if the defects were not observable, and by the use of ordinary care would not have been observed, and no actual notice given to defendant's officers, there could be no recovery.

The objection to instruction No. 8 does not seem to be well taken, because it could hardly have been prejudicial. No attempt was made to prove notice or knowledge on the part of any other officers than the street commissioner and sidewalk inspector. Doubtless the language of the instruction is too broad in allowing notice to "any of the municipal authorities" or "other officers of defendant city." But as no attempt had been made to prove notice upon any but the proper officers, and the jury was abundantly cautioned not to find such notice unless the evidence showed it had been given, it is not thought that the instructions, taken as a whole, could have misled the jury to defendant's prejudice.

It is recommended that the judgment of the district court be affirmed.

DAY and KIRKPATRICK, CC., concur.

Affirmed.

SANFORD v. ANDERSON et al.

(Supreme Court of Nebraska. Jan. 8, 1902.)

MORTGAGE FORECLOSURE—APPRAISAL—OBJECTIONS—DECREE.

1. An error in appraising real estate for judicial sale, whereby a deduction is made for liens that have been satisfied or merged in the decree, is error without prejudice, where the property sold for more than two-thirds its gross valuation.

2. All objections to the appraisement, to be available, must be lodged before sale.

3. On the facts stated, *held* the trial court had jurisdiction to enter the decree assailed.

Commissioners' Opinion. Department No. 3. Appeal from District Court, Saunders County; Sedgwick, Judge.

"Not to be officially reported."

¶ 2. See Mortgages, vol. 35, Cent. Dig. § 1504.

Digitized by Google

Action by Whitfield Sanford against John Anderson and others. From a judgment for plaintiff, defendants appeal. Affirmed.

S. H. Sornborger and B. E. Hendricks, for appellants. M. B. Reese, for appellee.

ALBERT, C. This is an appeal from an order confirming a sale of real estate under a decree of foreclosure. The first reason urged for a reversal is that the appraisers improperly deducted two liens from the gross value of the property, one of which was a tax lien, included and merged in the decree, the other a mortgage which had been previously satisfied. That these liens were improperly deducted became known at the time of the sale, and the plaintiff thereupon bid more than two-thirds of the gross valuation of the property, and it was sold to him. As the property was sold for more than two-thirds of its gross valuation, that certain liens were improperly deducted by the appraisers worked no prejudice to the defendants. La Selle v. Nicholls, 56 Neb. 458, 76 N. W. 870; Bernheimer v. Hamer (Neb.) 82 N. W. 18.

2. It is next urged that the tax lien included in the decree covered only a portion of the land, and that such portion was not separately appraised. The answer to this is that no such objection was lodged against the appraisement until after the sale. The rule, settled by an unbroken line of decisions, is that all objections to the appraisement, to be available, must be made before sale. Bernheimer v. Hamer, supra.

3. It is urged, lastly, that as the decree is based in part on a cross-petition filed after the answer day, and as no summons issued thereon, the court had no jurisdiction over appellants as to such cross-petition, and the decree based thereon for that reason is void. The rule invoked by appellants has no application to the facts in this case. The appellants filed a demurrer to plaintiff's petition; while a demurrer was pending, the cross-petition was filed; the demurrer was submitted to the court on the same day the cause was submitted on the petition, cross-petition, and the evidence; a stay was taken at the request of one of the appellants; both joined in resisting confirmation. Under such circumstances, they cannot be heard to complain of a lack of notice of the filing of the cross-petition. They submitted themselves to the jurisdiction of the court, and the decree is valid.

We recommend that the order of the district court confirming the sale be affirmed.

AMES and DUFFIE, CC., concur.

Affirmed.

SULLIVAN v. HAIGHT.

(Supreme Court of Nebraska. Jan. 8, 1902.)

FORCIBLE ENTRY—APPEAL FROM JUSTICE.

1. No appeal lay to the district court from the judgment of a justice of the peace in proceedings in forcible entry and detainer prior to the enactment of chapter 85, p. 484, Laws 1901.

Commissioners' Opinion. Department No. 2. Error to District Court, Platte County; Hollenbeck, Judge.

"Not to be officially reported."

Action by Alonzo Haight against Dennis Sullivan. Judgment for plaintiff before a justice, and defendant appeals to the district court. From a judgment for plaintiff, defendant brings error. Reversed.

McAllister & Cornelius, for plaintiff in error. Reeder & Albert, for defendant in error.

OLDHAM, C. This was an action in forcible entry and detainer prosecuted by the defendant in error against the plaintiff in error before a justice of the peace of Platte county, Neb. There was a judgment for the defendant in error before the justice, and plaintiff in error attempted to have this judgment reviewed on appeal in the district court of Platte county. The district court attempted to entertain the appeal, and trial was had de novo there, and defendant in error again recovered judgment. This judgment plaintiff in error seeks to have reviewed in this court.

This case presents the same question as that presented in Armstrong v. Mayer, 60 Neb. 425, 83 N. W. 401. Under the rule then established the district court obtained no jurisdiction of the subject-matter of the case by the attempted appeal; hence all the proceedings had in that court were a mere nullity, and the judgment must, therefore, be reversed; but, as the attempted appeal was taken and the subsequent proceedings in the district court were had at the instance of plaintiff in error, we think the costs should be taxed to plaintiff in error. We recommend, accordingly, that the judgment be reversed, and the district court directed to dismiss the pretended appeal, and that the costs be taxed to plaintiff in error.

POUND and SEDGWICK, CC., concur.

Reversed, with directions.

KITCHEN BROS. HOTEL CO. v. PHILBIN.

(Supreme Court of Nebraska. Jan. 8, 1902.)

LEASE — COVENANTS — QUIET ENJOYMENT — PROPERTY DEMISED—EVICTION—ACTION ON LEASE—COUNTERCLAIM—DAMAGES.

1. A covenant for quiet enjoyment of the leased premises is implied from the demise.

2. A lease of a part of a building passes with it, as incident thereto, everything necessarily used with, or reasonably necessary to the enjoyment of, the part demised.

3. Where a room on the ground floor of a hotel building was leased to a ticket broker, and it appeared that a large portion of his business came from patrons of the hotel, who

¶ 1. See Landlord and Tenant, vol. 32, Cent. Dig. § 471.

Digitized by Google

entered his office from the hotel rotunda, *held*, that the lease included the use for the lessee's customers of a door and hallway leading from the rotunda to the room leased.

4. The use of said door and hallway for the purposes of lessee's business being incident to the lease of the room, an obstruction thereof by the lessor, so as to prevent use by the lessee and his customers, is an eviction, which the lessee may treat as total or partial, at his election.

5. In case the lessee elects to treat the eviction as partial, he may maintain a counterclaim for damages upon the implied covenant for quiet enjoyment, when sued by the lessor on the covenant to pay rent.

6. A party may recover for gains prevented where such damages are certain, and are the natural result of the wrong complained of.

Commissioners' Opinion. Department No. 2. Error to District Court, Douglas County; Powell, Judge.

"Not to be officially reported."

Action by Philip H. Philbin against the Kitchen Bros. Hotel Company. Judgment for plaintiff, and defendant brings error. Affirmed.

George E. Pritchett, for plaintiff in error. W. F. Gurley and Guy R. C. Read, for defendant in error.

POUND, C. The plaintiff, a corporation owning and operating the Paxton Hotel, in the city of Omaha, leased to the defendant a storeroom upon the ground floor of the hotel building, to be used as a ticket broker's office. The room fronted upon the street, and had a front door opening thereon, but had also a back door opening into a hallway leading to the hotel rotunda. After the lease had expired, defendant continued in possession as tenant from year to year under the same terms as in the lease. While he was so in possession, apparently in consequence of some dispute, the plaintiff obstructed the hallway in question by a wooden partition, and thus deprived defendant of the use thereof and of the back door. It is in evidence that a large portion of the defendant's business came from patrons of the hotel, who entered his office from the rotunda by this door and hallway. Accordingly, when sued upon his covenant to pay rent, the defendant, by way of counterclaim, set up his damages by reason of the obstruction of the hallway, and two further claims for damages which we need not consider, for the reason that one was taken from the jury in the instructions of the court, and the other was evidently not allowed by them in their verdict. Upon the counterclaim in question, however, the jury found for the defendant, and plaintiff is prosecuting error from the judgment rendered thereon.

We are of the opinion that the counterclaim was maintainable, and that the judgment is right. A covenant for quiet enjoyment of the leased premises was implied from the demise. Taylor, Landlord & Tenant, § 304. Hence any interference with the effective use of the part of the building demised which would amount to an eviction, in whole or in part, as a breach of such covenant, would be available to the lessee by way of counterclaim when sued on his covenant to pay rent. The use of the back door and hallway was clearly included in the lease. We have recently had occasion to pass on two cases not unlike the one at bar, and have held that a lease of a part of a building passes with it as incident thereto, everything necessarily used with or reasonably necessary to the enjoyment of the part demised. Miller v. Fitzgerald Dry Goods Co. (Neb.) 86 N. W. 1078; Herpolsheimer v. Funke (officially unreported, decided July 10, 1901) 95 N. W. 688. Considering the nature of defendant's business, which would make an office in the hotel building desirable because of its accessibility to travelers, patrons of the hotel, the fact that so large a part of defendant's business came from patrons of the hotel who entered his office from the hotel rotunda, and the fact that the room in question had been used for many years preceding as a ticket office, and had been reached from the rotunda by the hallway and door in question, it is evident that the use of the back door by defendant's customers was in contemplation of the parties quite as much as the use of the front door, and that this door and hallway were reasonably necessary to the effective use of the part of the building demised. This being so, the obstruction thereof by the lessor, so as to prevent use by lessee and his customers, was an eviction, which the lessee might treat as total or partial, at his election. Taylor, Landlord & Tenants, § 315; Herpolsheimer v. Funke, supra. The lessor could not insist that the lessee treat it as a total eviction; the latter might properly elect to remain, and to sue for his damages upon the covenant for quiet enjoyment. It follows that when sued for rent he might maintain the counterclaim upon which the judgment in question was rendered.

It is argued that the damages claimed for loss of business by reason of the closing up of the door and hallway are too remote, speculative, and uncertain to be allowable. We think otherwise. It has been thoroughly settled that a party may recover for gains prevented where such damages are certain and are the natural result of the wrong complained of. Wittenberg v. Mollyneaux, 60 Neb. 583, 83 N. W. 842; Id., 59 Neb. 203, 80 N. W. 824. The evidence, like that offered in the case cited, "was the best attainable under the circumstances," and showed a very considerable damage with not a little certainty. The defendant produced his books, showing the amount of his business before and after the act complained of, he showed that his expenses were fixed, he showed the condition of the ticket brokerage business throughout the city during the respective periods, and the inevita-

Digitized by Google

ble conclusion was that the large falling off of business which his books showed resulted from the cutting off of one of his chief sources of custom, as one would naturally have anticipated.

We recommend that the judgment be affirmed.

OLDHAM and SEDGWICK, CC., concur.

Affirmed.

McCARTHY et al. v. MORGAN.

(Supreme Court of Nebraska. Jan. 8, 1902.)

NEW TRIAL—JOINT MOTION—REPLEVIN—ALTERNATIVE JUDGMENT.

1. Where two or more parties join in a motion for a new trial the motion is indivisible, and unless it should be sustained as to all it must be overruled as to all.

2. Where plaintiff begins an action of replevin and fails to procure possession of the property sued for, but continues the action as one for damages, an alternative judgment for the return of the property or its value is not required.

Commissioners' Opinion. Department No. 2. Error to District Court, Sheridan County; Westover, Judge.

"Not to be officially reported."

Action by Mary E. Morgan against Robert McCarthy and others. Judgment for plaintiff, and defendants bring error. Affirmed.

J. H. Edmunds, S. H. Ladd, and Frank J. Kelley, for plaintiffs in error. C. Patterson and W. W. Wood, for defendant in error.

OLDHAM, C. This was an action of replevin originally instituted before a justice of the peace, and taken by appeal to the district court of Sheridan county, Neb. It was stipulated that plaintiff was unable to procure possession of the property, and the action by agreement proceeded as one for damages. Plaintiff had judgment below, and defendants bring error to this court.

The alleged errors called to our attention in the brief of plaintiffs in error arise largely from a misconception of the record. It is first contended that the court erred in not dismissing the plaintiff's appeal because no appeal undertaking was filed within 10 days of the trial in the justice's court. The record shows that the trial was had in the justice's court on the 12th day of February, 1897; that an appeal undertaking was filed and approved on the 18th day of February, 1897; and that a transcript was filed in the office of the clerk of the district court of Sheridan county, Neb., on the 26th day of February, 1897. This, then, was sufficient to invest the district court of Sheridan county, Neb., with jurisdiction of the subject-matter of the controversy. It is true that the record shows that, on suggestion of a diminution of the record by the defendants below, they were permitted to file a corrected and supplemental transcript on the 7th day of October, 1897; but the filing of this amended transcript did not divest the district court of the jurisdiction it had acquired over the subject-matter of the controversy.

It is next contended by counsel for plaintiffs in error that there is not sufficient evidence to sustain the judgment against defendant Robert McCarthy, although there may be sufficient to sustain the judgment against his codefendant the Enlow Cattle Company. If this contention is well founded, it is unfortunate that the two defendants filed a motion for a new trial jointly in the court below, for it is the established rule that where two or more parties join in a motion for a new trial the motion is indivisible, and unless it should be sustained as to all it must be overruled as to all. Minick v. Huff, 41 Neb. 516, 59 N. W. 795; Gage v. Bloomington, 37 Neb. 699, 56 N. W. 491; Scott v. Chope, 33 Neb. 41, 49 N. W. 940.

The next objection raised is that the judgment was not in the alternative; but where an action in replevin is instituted, and the plaintiff fails to obtain possession of the property replevined, and prosecutes the action as one for damage, there is no reason for an alternative judgment.

It is therefore recommended that the judgment of the district court be affirmed.

POUND and SEDGWICK, CC., concur.

Affirmed.

McKEE v. McKEE.

(Supreme Court of Nebraska. Jan. 8, 1902.)

DIVORCE—CRUELTY—ALIMONY.

1. Evidence examined, and *held* sufficient to sustain a decree of divorce on the ground of extreme cruelty.

2. While there is no fixed rule for determining the amount of alimony to be awarded under section 22, c. 25, Comp. St. 1901, such award should bear a reasonable relation to the husband's ability to pay, as disclosed by the evidence.

3. In awarding alimony, the court should consider the condition, situation, and standing of the parties, financially and otherwise, the duration of their marriage, the amount and value of the husband's estate, the source from which it came, and how far, if at all, the wife contributed thereto. Zimmerman v. Zimmerman, 80 N. W. 643, 59 Neb. 80.

Commissioners' Opinion. Department No. 2. Appeal from District Court, Johnson County; Letton, Judge.

"Not to be officially reported."

Action by Laura J. McKee against John McKee. Judgment for plaintiff, and defendant appeals. Modified.

S. P. Davidson, for appellant. W. W. Giffen and Frank Martin, for appellee.

POUND, C. This is an appeal from a decree of divorce rendered in a suit brought by Mrs. McKee against her husband, in which

¶ 2. See New Trial, vol. 37, Cent. Dig. § 233.

¶ 3. See Divorce, vol. 17, Cent. Dig. § 676.

Digitized by Google

she sought such relief upon the ground of extreme cruelty. The court awarded alimony to the amount of $1,500, and also $150 attorney's fees. It would subserve no useful purpose to set forth the evidence in detail. There is a square conflict between Mrs. McKee on the one hand, and her husband, and his son by a former marriage, on the other. Certain of the neighbors in a measure corroborate the plaintiff. The credibility of these witnesses, and the weight to be given to their testimony, could best be judged in the lower court. The plaintiff's evidence, if believed, is entirely sufficient to make out a case of extreme cruelty, and to sustain the findings and decree.

With respect to the amount of alimony awarded, however, we are not entirely satisfied with the decree rendered. No claim was made for dower in the husband's lands, under section 23, c. 25, Comp. St. 1901, so that, although it was suggested in Walton v. Walton, 57 Neb. 102, 77 N. W. 392, that extreme cruelty would be "misconduct" within the purview of that section, the award of alimony must be governed by the provisions of section 22. Tatro v. Tatro, 18 Neb. 395, 25 N. W. 571, 53 Am. Rep. 820; Walton v. Walton, 57 Neb. 102, 77 N. W. 392. That section provides that the court shall allow "such alimony * * * as it shall deem just and reasonable, having regard to the ability of the husband, and the character and situation of the parties, and all other circumstances of the case." It has often been said that there are no fixed rules for determining the amount of alimony to be awarded under this section (Smith v. Smith, 19 Neb. 706, 28 N. W. 296; Heist v. Heist, 48 Neb. 798, 67 N. W. 790), and even that, to warrant interference by this court, there must have been "an evident abuse of discretion" on the part of the court below. Wilde v. Wilde, 37 Neb. 891, 56 N. W. 724. But in the statute itself, and in most of the adjudications thereon, it is also laid down that the alimony awarded should bear a reasonable relation to the amount and value of the husband's property; and we think it clear that the husband's ability to pay, as disclosed by the evidence, must be taken into account as one of the chief circumstances controlling the court's discretion. Zimmerman v. Zimmerman, 59 Neb. 80, 80 N. W. 643. In that case the court holds that the considerations which are to be taken into account in awarding alimony are the condition, situation, and standing of the parties, financially and otherwise, the duration of their marriage, the amount and value of the husband's estate, the source from which it came, and how far, if at all, the wife contributed thereto. Mrs. McKee was the defendant's second wife. They had no children, while he had one child by his former marriage. She appears to be in robust health, had been supporting herself before marriage, and did at least the ordinary work of a farmer's wife while living with her husband. The defendant owned the bulk of his property before marriage. She brought very little, and her contribution to the rise in values, which we know has been general, cannot have been large. As to the value of his property, the testimony is not as satisfactory as it might be. The principal item is a farm of 120 acres, variously estimated as worth from $25 to $45 per acre. He claims to owe some $2,100, while other witnesses testify that he boasted of owing nothing, and that he even loaned money. The alleged indebtedness is to defendant's father and brother, and only $1,000 of it is shown very convincingly. Taking the whole testimony together, however, remembering that she has received all the household goods that she cared to take, we are constrained to think that the award of $1,500 alimony, coupled with $150 for attorney's fees, is too much. Although there is ample testimony to sustain the findings, and although no amount of provocation would justify the rough and cruel treatment charged, and regarded as proved by the trial judge, we cannot but feel that the plaintiff should bear her fair share of the blame for the domestic difficulties in question. By her own account, her life as a farmer's wife was not an easy one in its ordinary course, and, had no difficulties arisen, she would have had to work hard in the situation and circumstances in which the parties were placed. Considering these circumstances, which seem to be within the purview of the last clause of section 22, the duration of the marriage, the fact that defendant has a child to support, her age and ability to support herself, the value of the property as disclosed in evidence, the fact that the property was acquired almost entirely before marriage, the proved indebtedness of $1,000, and the amount of attorney's fees allowed, we think $1,000 as much as the defendant may well be asked to pay.

We therefore recommend that the decree be modified by reducing the amount of alimony awarded from $1,500 to $1,000, and that the decree, so modified, be affirmed. We also recommend that each party pay his own costs in this court.

OLDHAM and SEDGWICK, CC., concur.

Modified and affirmed.

McLAGAN & PIERCE v. WITTE.

(Supreme Court of Nebraska. June 19, 1901.)

FORECLOSURE SALE—RETURN OF SHERIFF—ORDER OF SALE.

1. When a sheriff's return shows a sale to "Henry Musgrave, assignee of the decree herein," objection that the return shows no purchaser, in the absence of any showing that Henry Musgrave is a fictitious person, is not well taken.

2. The fact that no money was paid not available as an objection where sale was to the assignee of the decree and its confirmation is urged by plaintiff.

3. Objection that order and notice of sale make no mention of the assignment of the de-

Digitized by Google

cree, not available in the absence of any showing of prejudice.

Commissioners' Opinion. Department No. 1. Appeal from District Court, Knox County; Robinson, Judge.

"Not to be officially reported."

Action by McLagan & Pierce against Carl Witte. Judgment for plaintiffs. Defendant appeals. Affirmed.

E. A. Houston, for appellant. L. C. Chapman, for appellees.

HASTINGS, C. This is an appeal from an order confirming a sale. The first two objections are expressly waived by appellant. The third is that the sheriff's return to the order of sale shows that there was no purchaser of the premises at said sale. An examination of the return shows that the sale was made to "Henry Musgrave, assignee of decree and mortgage." In the absence of any showing, we are certainly not justified in holding that the return of the sheriff is false, and Henry Musgrave a fictitious person.

Objection 4 is that the return shows on its face that no money was paid. This is true, but it is impossible to see how the appellant, Witte, is damaged by that fact. His indebtedness upon the decree is diminished to the extent of the amount bid, so far as it shows, and appellees are in any event estopped from complaining that the decree is not satisfied to that extent, because they were appearing in the lower court to procure the confirmation, and are appearing here to uphold it.

The fifth objection is that the record fails to show that Henry Musgrave is the assignee of the decree, and that plaintiffs still own it. As against the sheriff's return that Henry Musgrave is the assignee, and that the premises were sold to him as such, we cannot take the unsupported assertion of appellant's objection. The record shows simply that the decree was taken in the name of McLagan & Pierce; that subsequently an assignment, purporting to have been made by Henry Musgrave to McLagan & Pierce, was filed in the case; and, still following that, there came an assignment purporting to be that of McLagan & Pierce by Rob Roy Macgregor, attorney in fact to Henry Musgrave. This assignment was filed and recognized by plaintiff's attorney, and he appeared to procure confirmation of the sale. In the absence of any showing, the return of the sheriff that the property was sold to Henry Musgrave, assignee, will be taken as correct.

Counsel does not cite any authority for his sixth and seventh objections, that the order of sale and notice do not state any assignment of the decree. We know of no reason why the fact of the assignment should be required to appear in the order of sale or in the notice. No indication is given us as to how the absence of such fact from the notice and order of sale operated to prejudice appellant, and we cannot presume that he was injured by the nonappearance in the order of sale, or in the notice, of matters which are not expressly required to be contained in them.

There seems to be nothing in these objections calling for a reversal of the action of the trial court.

It is therefore recommended that the judgment of the district court be affirmed.

DAY and KIRKPATRICK, CC., concur.

Affirmed.

CROCKETT v. MILLER.

(Supreme Court of Nebraska. Jan. 8, 1902.)

TRIAL—REBUTTAL EVIDENCE—ORAL EVIDENCE—PRESUMPTIONS—FRAUD—INSTRUCTIONS.

1. Where plaintiff's evidence fails to show a prima facie case, but defendant goes on without objection, and supplies facts which, in connection with that evidence, if taken as true, would make out a case for plaintiff, it is not error to permit plaintiff to rebut a showing as to fraud, which appears for the first time in defendant's evidence.

2. Doctrine as to inadmissibility of oral evidence to vary a contract has no application as between a party to it and a stranger, where there appears no estoppel against showing the truth.

3. Instruction that good faith is presumed in business transactions, and fraud, if alleged, must be shown, *held* correct, as applied to matters in which the parties do not appear to have any family relationship.

4. Underscoring in an instruction the words "bona fide," not prejudicial to a party alleging fraud.

Commissioners' Opinion. Department No. 1. Error to District Court, Knox County; Robinson, Judge.

"Not to be officially reported."

Action by Belle Miller against Charles Crockett. Judgment for plaintiff, and defendant brings error. Affirmed.

John R. Hays, L. C. Chapman, and E. A. Houston, for appellant. M. F. Harrington, W. L. Henderson, and S. Draper, for appellee.

HASTINGS, C. The first error now complained of by defendant below, plaintiff in error here, is irregularity on the part of the trial court in permitting the plaintiff to make out her ownership of the property replevined by evidence introduced on rebuttal. It is also claimed that the verdict is contrary to law, and not sustained by sufficient evidence, in that the plaintiff's evidence shows at most only a joint title in plaintiff and her husband, while she replevined the entire interest. It is also claimed that there was error in instructing that fraud is never presumed, but must be proved, and that the law presumes that every person transacts business in good faith, and that the burden is upon the party

¶ 2. See Evidence, vol. 20, Cent. Dig. § 1966.

Digitized by Google

charging fraud to establish it. There is further complaint as to the underscoring of the words "bona fide" in an instruction.

It must be admitted that, if the case had stopped when plaintiff rested, her title to the goods replevined would have remained very dubious indeed. Plaintiff's evidence in chief consisted of the testimony of the defendant sheriff that he levied upon the stock of boots and shoes in question under an execution against one Joseph Horkey, that the goods were taken from him by replevin, and that he at no time ever bought them from Belle Miller, plaintiff. George E. Cheney then testified that he owned the lot and building in Creighton in which this stock of goods was kept; that he leased it in March or April to Belle Miller, or to Miller & Co., which he said was the same thing, and that she paid the rent. On cross-examination he said that he made and delivered the lease to I. B. Miller, her husband; that he received the rents from the hands of Joseph Horkey, defendant, in the execution on which the goods were taken; that the stock of goods was chiefly that which Mr. Horkey had formerly owned, but there had been no removal of it from the building since Horkey owned it; that it had been sold on mortgages about February 5th to a Mr. Bonesteel, who sold it to Millers about March 20th; that after its second sale Mr. Horkey and Mr. Miller were there about a week, when the latter left, and Horkey had been in charge ever since, until the levy in June, apparently managing the stock. Mrs. Miller, he said, was not there at the time of the purchase, so far as he knew, and an objection was sustained to the question as to whether she had been there since. On cross-examination he testified that the rent was paid by checks signed "Miller & Co.," drawn by Mr. Horkey. I. B. Miller testified to the authenticity of Mrs. Belle Miller's signature on Exhibit B, which was a certificate of association, certifying that she constituted the firm of Miller & Co., whose business was general merchandising at Creighton, Knox county, Neb. This certificate, and that of its recording on May 19, 1897, and before the levy was made, was introduced, and plaintiff then rested.

It must be admitted that this evidence falls decidedly short of establishing, prima facie, the ownership of Mrs. Miller, and, if the defendant had then rested his case, any judgment against him would have to be reversed. The evidence simply discloses that the goods, when seized on the writ against Mr. Horkey, were under that gentleman's apparent control in a building leased to Miller & Co., in which Mr. Horkey was carrying on a merchandising business under that name. There is not, in plaintiff's testimony, any indication of authority on the part of Horkey to act for Mrs. Miller, and until such authority was proved his possession could not be treated, and should not have been recognized, as that of plaintiff. It is urged on her behalf that the only thing needed to be shown to establish a prima facie case for her was possession of the goods at the time of their seizure. This may be granted, but the evidence falls short of establishing any such position. To do that required something more than simply a showing that the goods were in a building leased to plaintiff, and were in charge of a former owner, not shown to have any authority from her. Defendant, however, did not permit the matter to rest there, but introduced a considerable amount of evidence to show that on January 7th preceding this levy a large stock of goods owned by Joseph Horkey previous to that time had been seized under a couple of chattel mortgages in favor of the Bank of Creighton and H. E. Bonesteel, another mortgage or two placed upon them, and had been sold at foreclosure sale to Bonesteel, and by Bonesteel a portion of the goods, embracing those levied upon, sold to I. B. Miller, who was claiming to act on behalf of his wife, and who placed Horkey and a brother of the wife in charge. An effort was made to show that these mortgages were fraudulent, and the possession and sale under them a fraud to cover Horkey's property against attacks by his creditors, and the sale to Miller a sham. Evidence was admitted in rebuttal of defendant's proof, and hence the complaint.

The complaint seems not well founded. While there seems to have been nothing in the evidence in chief which required the defendant to go on, nevertheless, when he did go on, and produced his evidence, which supplemented that of plaintiff in the particular in which it was lacking, it became competent for plaintiff to rebut that portion of defendant's evidence which tended to indicate fraud in the transaction shown by him. The court does not seem to have gone outside of the evidence given by defendant in admitting the rebuttal, and the main error relied upon for the reversal of this case cannot be found in it.

The verdict must also be held to be sustained by sufficient evidence. So far as this point is concerned, the complaint is that the bill of sale made by Bonesteel was to plaintiff and her husband, and it is objected that that instrument was conclusive, and evidence inadmissible to show that the actual title was conveyed to plaintiff alone, and also that the evidence taken as a whole does not show such title. It is true that there is a doctrine that, when the parties to an agreement have reduced it to writing, that writing shall be deemed conclusive in any dispute between them as to what the agreement was. But it does not seem that the defendant here can claim any such conclusiveness in regard to this instrument made between other parties. The sole question is one of intention between them, and, so far as defendant is concerned, it is a matter of no importance to him as between plaintiff and her husband on what terms, or for what consideration, or by what means the sole title to these goods

Digitized by Google

was transferred from her husband to plaintiff, if at the commencement of the action she had it. No denial is tendered of testimony going to show that when this bill of sale was made the arrangements between plaintiff and her husband were not completed, but that before the transaction was completed and the consideration paid it was agreed that the wife should hold the title.

It seems hardly necessary to discuss the instructions complained of. The first one (No. 2) is as follows: "Fraud is never presumed, but must be proved. The law presumes that every person transacts business honestly and in good faith, and the burden of proving fraud is on the party who charges fraud. In this case the burden of proving fraud is on the defendant." This instruction seems a fair statement of the law in this case, in which we are not dealing with transfers between members of the same family. The complaint that the presumption of good faith is there stated as being conclusive is certainly not tenable.

The objection that in setting out the nature of defendant's claim by instruction No. 3 the words "bona fide" are underscored is certainly no better. That the jury's attention was thereby particularly challenged to the proposition that plaintiff was claiming good faith can hardly have prejudiced the defendant, when they were also told distinctly the nature of defendant's claim to the contrary. The emphasizing the idea of good faith can hardly assist in the perpetration of fraud.

It is therefore recommended that the judgment of the trial court be affirmed.

DAY and KIRKPATRICK, CC., concur.

Affirmed.

PEARSON v. BADGER LUMBER CO. et al.

(Supreme Court of Nebraska. Jan. 8, 1902.)

MORTGAGE FORECLOSURE—APPRAISAL—IMPEACHMENT.

1. Where an appraisement of real estate has been duly made for the purpose of judicial sale, it cannot be successfully attacked solely on the ground that the property has been appraised too low. To use the low valuation as a successful basis for attacking the appraisement, it must be alleged and proved that it was fraudulent. Brown v. Fitzpatrick, 76 N. W. 456, 56 Neb. 61.
2. The purpose of an appraisement of real estate for judicial sale is to fix a price, below two-thirds of which no bids will be received.
3. The appraisers are by statute a summary tribunal to fix such price, and their action, when duly taken under the statute, can be impeached for fraud alone.
4. Such action of the appraisers does not deprive the court of any of its equity power to set aside a sale or to require that such sale be for an adequate price.
5. No abuse of discretion of the trial court in refusing to set the sale aside is shown or complained of.

---

[1] 1. See Mortgages, vol. 35, Cent. Dig. §§ 1503, 1504.

Commissioners' Opinion. Department No. 1. Appeal from District Court, Lancaster County; Holmes, Judge.

"Not to be officially reported."

Action by Eugene H. Pearson against the Badger Lumber Company and others. Judgment for plaintiff, and defendants appeal. Affirmed.

Chas. E. Magoon, Frank Irvine, Tibbets Bros., and Morey & Anderson, for appellants. S. L. Geisthardt, for appellee.

DAY, C. This is an appeal from a judgment of the district court of Lancaster county confirming the sale of real estate made in pursuance of a decree of mortgage foreclosure. The property was appraised at $8,700. Upon the filing of the appraisement with the clerk, the mortgagor filed objections to the appraisement, on the ground that the value placed on the property was too low. The motion was overruled. After the sale of the premises, a similar objection was interposed to the confirmation.

It is contended by the appellants that the value of the property as fixed by the appraisers was so far below its real and true value as to create the inference that the appraisement was fraudulent. As a basis for this contention, a number of affidavits are referred to in the record, wherein the property was valued at sums ranging from $12,000 to $25,000. There was no claim of any fraudulent or wrongful act on the part of the appraisers or of the appellee, the sole objection being that the property was appraised too low. Where an appraisement of real estate has been duly made for the purpose of judicial sale, it cannot be successfully attacked solely on the ground that the property has been appraised too low. To use the low valuation as a successful basis for attacking the appraisement, it must be alleged and proved that it was fraudulent. Brown v. Fitzpatrick, 56 Neb. 61, 76 N. W. 456; Mills v. Hamer, 55 Neb. 445, 75 N. W. 1105. The value of a piece of property is largely a matter of opinion, and it is now the well-established doctrine of this court that the appraisement cannot be successfully assailed merely because the appraisers were mistaken, or because they differed in their valuation from that of other witnesses. Nelson v. Alling, 58 Neb. 606, 79 N. W. 162; Ecklund v. Willis, 44 Neb. 129, 62 N. W. 493; Kearney Land & Investment Co. v. Aspinwall, 45 Neb. 601, 63 N. W. 827; Brown v. Fitzpatrick, 56 Neb. 61, 76 N. W. 456; Ballou v. Sherwood, 58 Neb. 20, 78 N. W. 383; Lockwood v. Cook, 58 Neb. 302, 78 N. W. 624; Michigan Mutual Life Ins. Co. v. Richter, 58 Neb. 463, 78 N. W. 932.

The purpose of an appraisement of real estate is to fix an upset price, below two-thirds of which no bids will be received. The Legislature created a tribunal to fix such a price, and it was never the intention that

Digitized by Google

honest valuation placed upon property, for purposes of judicial sale, by legally qualified appraisers, should be set aside, except when impeached by fraud. Wood v. Clark, 58 Neb. 115, 78 N. W. 396. We adhere to the rule previously announced by this court, that the upset price fixed by the appraisers is conclusive, unless assailed for fraud or disqualification of the appraisers under the statute, or for some other equally potent reason. Such action of the appraisers does not deprive the court of any of its equity power to set aside a sale when made, or to require that a sale shall be for an adequate price. If the result of a sale is a price so low that to uphold it would be inequitable and against good conscience, the court should set it aside for such cause, even though it be for two-thirds of the amount of the appraisement. Such action is, and must necessarily be, largely within the sound discretion of the trial court.

We see in this case no abuse of discretion of the lower court in refusing to set the sale aside, and in the briefs and argument no such complaint is made. We therefore recommend that the judgment of the district court be affirmed.

HASTINGS and KIRKPATRICK, CC., concur.

Affirmed.

MURPHY v. SAMPSON.

(Supreme Court of Nebraska. Jan. 8, 1902.)

CONTRACT OF EMPLOYMENT—BREACH BY SERVANT—QUANTUM MERUIT.

1. Where a party hires himself to another for a fixed period, and leaves the service before the expiration of his term, though without fault on the part of the employer, he may recover the value of the services as upon quantum meruit, less such damages as the employer may have sustained by the breach of the contract.

Commissioners' Opinion. Department No. 1. Error to District Court, Lincoln County; Grimes, Judge.

"Not to be officialy reported."

Action by Phelix Sampson against E. W. Murphy. Judgment for plaintiff, and defendant brings error. Affirmed.

Thos. C. Patterson, for plaintiff in error. Hoagland & Hoagland, for defendant in error.

DAY, C. This action was originally commenced in the county court of Lincoln county by Phelix Sampson against E. W. Murphy to recover the value of certain services performed by the plaintiff for the defendant as a farm laborer. In the county court there was judgment for the plaintiff. The defendant appealed to the district court, where upon trial the plaintiff again recovered judgment for $28.30 and costs. To review this judgment, the defendant has brought error to this court.

There is a serious dispute between the parties as to what their contract was. Plaintiff claims that he agreed to work for the defendant as a farm laborer for a period of three months, commencing May 8, 1897, for which he was to receive his board, $5 in money or clothing, and a horse worth $60; that after he had worked 60 days he discovered that the horse which the defendant proposed to give him was a very inferior animal, and was not worth to exceed $25. The plaintiff also claimed that he was mistreated by the defendant, whom the testimony shows was a profane and violent man, and much given to cursing his men, especially if anything went wrong. For these reasons plaintiff abandoned the contract, and, being unable to get any settlement out of the defendant for the work he had performed, brought this action. The defendant, on the other hand, claims that the plaintiff agreed to perform three months' service as a farm hand, commencing June 8, 1897, for which he was to receive his board, $5 in money or clothing, and a certain horse called "Cap," and that nothing was said or agreed upon as to the value of the horse. There is also a dispute as to the length of time the plaintiff worked. The plaintiff says he worked from May 8th to July 8th, while the defendant claims the plaintiff worked from June 8th to July 22d.

It is contended by the defendant that the contract being an entirety, that plaintiff should work three months for the horse, and defendant being ready and willing to perform the contract on his part, plaintiff, by abandoning the contract without just cause, has forfeited his right to recover anything for his work. There are many authorities which sustain this position. Indeed, nearly all of the older authorities do, but we think a majority of the later cases sustain the doctrine that, where a servant has in part fulfilled his contract for personal services, he may recover quantum meruit from his master, deducting therefrom such damages as the master may have sustained by reason of the breach of the contract. This rule is recognized in Parcell v. McComber, 11 Neb. 209. In that case McComber had agreed to work for Parcell for one year from October 1, 1876, for the sum of $195. After working five months he quit, and brought suit to recover the value of his services. It was held that he could recover the actual value of his labor, not exceeding the rate agreed upon, less any damages which had been sustained by Parcell by reason of the failure of McComber to work the entire year. Burkholder v. Burkholder, 25 Neb. 270, 41 N. W. 145. The leading case which sustains the foregoing proposition is Britton v. Turner, 6 N. H. 481, 26 Am. Dec. 713. There the plaintiff had contracted to work for the defendant for a year for the sum of $100, but he left the defendant's employment, after working for him for about nine months, without the consent of the de-

Digitized by Google

fendant, and without good cause. It was held that he could recover on quantum meruit, less such damages as the defendant might have sustained by the breach. Duncan v. Baker, 21 Kan. 99; Byerlee v. Mendel, 39 Iowa, 382; Wolf et al. v. Gerr, 43 Iowa, 339. In McClay v. Hedge, 18 Iowa, 66, Judge Dillon, who wrote the opinion of the court, used the following language: "The controversy is whether, in such a case, he may recover as upon a quantum meruit. The question was settled in this state by the case of Pixler v. Nichols, 8 Iowa, 106 [74 Am. Dec. 298], which distinctly recognized and expressly followed the case of Britton v. Turner, 6 N. H. 481 [26 Am. Dec. 713]. That celebrated case has been criticised, doubted, and denied to be sound. It is frequently said to be good equity but bad law. Yet its principles have been gradually winning their way into professional and judicial favor. It is bottomed on justice, and is right upon principle, however it may be upon the technical and more illiberal rules of the common law as found in the older cases." The court instructed the jury in harmony with the rules above announced, both with respect to the theory of the defendant, which was that the horse "Cap" was to be given for the service of plaintiff, and also with respect to the theory of the plaintiff that the horse he was to receive was to be worth $60.

We have examined the instructions and the evidence, and can find no prejudicial error in the record, and therefore recommend that the judgment of the district court be affirmed.

HASTINGS and KIRKPATRICK, CC., concur.

Affirmed.

CLARK v. WOLF.

(Supreme Court of Nebraska. Jan. 8, 1902.)

APPEAL—PRESUMPTIONS—MORTGAGE FORECLOSURE—SALE.

1. "Where the record is silent as to the time of filing copies of the certificates of liens, it will be presumed that they were duly and regularly filed."

2. A sale will not be set aside for irregularities or errors not prejudicial to the party complaining.

Commissioners' Opinion. Department No. 1. Appeal from District Court, Howard County; Kendall, Judge.

"Not to be officially reported."

Action by Sarah J. C. Clark against Adam Wolf. Judgment for plaintiff, and defendant appeals. Affirmed.

Bell & Robinson, for appellant. Henry Nunn, for appellee.

DAY, C. This is an appeal from the confirmation of a judicial sale made in pursuance of a decree of mortgage foreclosure entered by the district court of Howard county. The appellant urges as an objection to the confirmation of the sale that no copy of the certificates of the county treasurer, county clerk, and clerk of the district court of lines upon the premises were filed in said cause before the sale. The record contains copies of the application of the sheriff to the several officers above named for liens, together with their certificates, but is silent as to when the copies were deposited with the clerk of the district court. Where the record is silent as to the filing of copies of the certificates of liens it will be presumed that they were duly and regularly filed. Bostwick v. Keller (Neb.) 87 N. W. 1060. It appears from the briefs of counsel that the sheriff filed with the clerk of the district court before the advertisement the original certificate obtained from the county officer above named instead of copies. There is nothing in the record from which this fact appears, and we cannot consider it. Moreover, the property sold for two-thirds of the gross valuation placed upon it by the appraisers, and therefore no possible prejudice resulted to the appellant. A sale will not be set aside for irregularities or errors not prejudicial to the party complaining. Miller v. Lanham, 35 Neb. 886, 53 N. W. 1010. We therefore recommend that the judgment of the district court be affirmed.

HASTINGS and KIRKPATRICK, CC., concur.

Affirmed.

CHAFFEE v. PARK FALLS LUMBER CO.

(Supreme Court of Nebraska. July 10, 1901.)

DIRECTING VERDICT.

1. It is not error for the court to instruct the jury to return a verdict for one of the parties to a litigation when there is not sufficient evidence to sustain a verdict in favor of his adversary.

Commissioners' Opinion. Department No. 3. Error to District Court, Douglas County; Dickinson, Judge.

"Not to be officially reported."

Action by the Park Falls Lumber Company against C. L. Chaffee. Judgment for plaintiff, and defendant brings error. Affirmed.

M. Langdon, for plaintiff in error. Montgomery & Hall, for defendant in error.

AMES, C. Error to the district court of Douglas county. The defendant in error brought this action to recover an unpaid balance of the purchase price of a car load of lumber alleged to have been sold by it to plaintiff in error. One of the defenses in the court below was that the lumber was not bought from the plaintiff in the action, but from one Henry Sherry, and that the defendant was the owner by purchase and as

¶ 2. See Mortgages, vol. 35, Cent. Dig. § 1538.

Digitized by Google

ment of an indebtedness from Sherry to the Howell Lumber Company exceeding in amount the balance sued for, and that this indebtedness ought, therefore, to be set off against the claim of the plaintiff. At the conclusion of the trial the court was of opinion that the contention that Sherry, and not the Park Falls Lumber Company, was the vendor of the lumber to recover for which the action was brought, was not sustained by evidence sufficient to support a verdict for the defendant, and therefore instructed the jury to return a verdict for the plaintiff. After a careful examination of the record, we are constrained to concur in the opinion of the trial judge. The testimony of witnesses on behalf of the plaintiff below is direct and positive, and is corroborated by written correspondence between the parties concerning the transaction in question; and while the course of previous dealings between Sherry and the Howell Lumber Company, as detailed by the witnesses for the defense, was such as may have naturally misled the defendant, the plaintiff is not connected with it in such a way as to be bound by it, and it cannot be made responsible for the mistake of the defendant. There are other alleged errors urged upon the attention of the court in the brief of plaintiff in error, but, inasmuch as the conclusion already announced is vital, there is no sufficient occasion for their discussion in this opinion. It is recommended that the judgment of the district court be affirmed.

ALBERT and DUFFIE, CC., concur.

Affirmed.

WINSIDE STATE BANK v. LOUND.

(Supreme Court of Nebraska. Dec. 18, 1901.)

EVIDENCE—PECUNIARY RESPONSIBILITY—EXEMPTIONS.

1. When the pecuniary responsibility of a person who is the head of a family is sought to be ascertained by proof of the amount of his property and indebtedness, it is error to refuse to instruct the jury that, for the purpose of the inquiry, the fact that a portion of his property is exempt should be taken into account by the jury.

Commissioners' Opinion. Department No. 3. Error to District Court, Madison County; Robinson, Judge.

"Not to be officially reported."

Action by Tom Lound against the Winside State Bank. Judgment for plaintiff. Defendant brings error. Reversed.

Quick & Carter and A. A. Welch, for plaintiff in error. Frank Fuller and Barnes & Tyler, for defendant in error.

AMES, C. This is a petition in error to review a judgment rendered upon a second trial by an action which was formerly before this court, and is reported in 52 Neb., at page 469. The plaintiff in error suffered defeat at the hands of the jury in both trials. Upon the second trial all the issues of fact were determined by the verdict from the consideration of conflicting evidence, and will, therefore, not be reviewed except to ascertain whether the court committed an error of law in submitting them to the jury. One of the matters in controversy at the trial was the value of certain notes executed by one McKinsey, a farmer, and head of a family, living in the neighborhood. They cannot be said to have had any market value, and the parties were driven to an inquiry concerning the pecuniary responsibility of the maker, which involved, of course, the ascertainment, as far as possible, both of the amount, character, and value of his property and the nature and extent of his indebtedness. A large amount of evidence concerning these matters was offered by the respective parties and admitted. At the conclusion of the trial the plaintiff in error asked to have the jury instructed what were the descriptions and extent in value of the property proved to belong to McKinsey which were exempt from levy and sale upon execution, for the purpose of consideration in arriving at the extent of his pecuniary responsibility and the value of the obligations in suit. If McKinsey had been a man of large means or of established financial credit in the community, this inquiry would not, perhaps, have been important, but the evidence shows that he was at the time a person of very meager fortune, so that the jury might have found, had the question been put to them, that he owned little, if anything, not exempt from seizure. In response to this view it is suggested that, on account of some peculiar relation between the defendant in error and McKinsey, the notes may have had some especial value to the former, irrespective of the financial responsibility of the maker. It is not necessary to determine whether such fact, if it existed, could have affected the liability of the plaintiff in error. No such matter is pleaded, or was attempted to be proved, and it is, therefore, not worth while to speculate about it. It is also urged that the inquiry was immaterial, because McKinsey, in case of judgment being rendered against him upon the notes, might have waived his rights of exemption, but we think that the probability of his so doing is too slight for consideration. It appears to us that, under the circumstances, the court erred in refusing the instruction requested.

It is recommended that the judgment of the district court be reversed, and a new trial granted.

ALBERT and DUFFIE, CC., concur.

Reversed.

Digitized by Google

PARKINSON v. PARKINSON.

(Supreme Court of Michigan. Sept. 22, 1903.)

DIVORCE—CRUELTY—EVIDENCE.

1. Where, in an action for divorce on the ground of extreme cruelty, the evidence of complainant's children in his favor showed prejudice and feeling against their mother, and other evidence of neighbors tended to show that defendant had been a faithful wife, and completely refuted complainant's charge against her of slovenly habits, and there was strong evidence that complainant had not been faithful to her, and that an occasion when she refused him admission to the house was after he had filed a bill for divorce against her, which was afterwards discontinued, a finding in favor of complainant was erroneous.

Appeal from Circuit Court, Wayne County, in Chancery; Morse Rohnert, Judge.

Action by Charles A. Parkinson against Mary E. Parkinson. From a judgment in favor of complainant, defendant appeals. Reversed.

George H. Prentis, for appellant. Allan H. Frazer, for appellee.

GRANT, J. Complainant asked and obtained a divorce from his wife in the court below. They had been married 24 years when the bill was filed, and had reared three children, who were then, respectively, 22, 20, and 17 years of age. The charge is extreme cruelty. The acts charged are threats to kill complainant and the children, the use of profane and abusive language, assaults upon complainant and two of his children, an ungovernable temper, slovenly habits, the taking and giving away of some of his personal property, and refusing him and his son entrance to his home. The answer denies all the acts of cruelty charged. The complainant's case depends entirely upon his own and the testimony of one of his sons and his daughter. The prejudice and feeling of the children against their mother, and in favor of their father, very clearly appears in their testimony. Their neighbors, who were frequently in the house, and knew the defendant, unanimously give testimony showing that she was a faithful wife and a good housekeeper. The charge of slovenly habits is so completely negatived by the testimony of those conversant with her housekeeping and home life that we regard this charge as completely refuted. This refutation is so complete that it casts suspicion upon the credit to be given to all the testimony of the complainant and his children. The complainant owned no property when they were married, and his wife remained closely at home during their married life, attending assiduously to the duties of the household and the rearing of the children. Complainant was frequently away from home on hunting and fishing excursions, while she remained at home, attending to her home duties. There is very strong evidence that complainant was not faithful to his marriage vows. When she refused her husband admission to the house was after he had filed a bill for divorce against her, and which was then pending, but afterwards discontinued. She was a witness in her own behalf, and denied all the charges made against her. A statement of the testimony would form no valuable precedent, and we consider it unnecessary to state it in detail.

We cannot agree with the learned circuit judge in holding that the complainant is entitled to a divorce. The decree below is therefore reversed, and the bill dismissed, with the costs of both courts.

CARPENTER, J., did not sit. The other Justices concurred.

BOARD OF SUP'RS OF IONIA COUNTY v. IONIA CIRCUIT JUDGE.

(Supreme Court of Michigan. Sept. 22, 1903.)

BRIDGES—CONSTRUCTION—POWER OF COUNTY BOARDS—STATUTES—CONSTITUTIONALITY—PETITIONS FOR CONSTRUCTION.

1. Pub. Acts 1889, No. 62 (Comp. Laws, §§ 4051–4056), authorizing county boards of supervisors to order the construction of bridges situated in more than one township at the expense of the townships as apportioned by the board, is not in conflict with Const. art. 10, § 9, providing that the board of supervisors of any county may borrow or raise by taxation a sum not exceeding $1,000, unless authorized by a vote of the electors of the county.

2. Miller's Comp. Laws, § 4131, which provides that, when it is necessary to raise a sum in excess of $2,000 for building any bridge in a township, the question shall be submitted to a vote of the electors of the township, relating to bridges wholly within a township, constitutes no restriction on the power conferred by Pub. Acts 1889, No. 62 (Comp. Laws, §§ 4051–4056), providing for the construction of bridges partly within two townships.

3. Where a petition for the construction of a bridge partly in two townships, presented to the county board of supervisors at the October term, was then refused, a new petition for the same purpose could be presented and acted on at the adjourned meeting in January, without reconsidering the former petition.

Mandamus by the board of supervisors of Ionia county against the Ionia circuit judge. Writ issued.

William K. Clute, Pros. Atty., and R. A. & W. E. Hawley, for relator. Chaddock & Scully, for respondent.

MONTGOMERY, J. At the January session of the board of supervisors, a petition was presented by the township of Portland, asking to have a bridge constructed across Grand river, which should be partly in the township of Portland and partly in the township of Danby, and that the expense of constructing the same should be apportioned between the two townships. This action was taken under Act No. 62, Pub. Acts 1889 (Comp. Laws, §§ 4051–4056). The prayer of the petition was granted, and an apportionment made, when a bill was filed by Danby township to restrain the construction of the

Digitized by Google

bridge, on the ground that the board of supervisors had exceeded its authority. No question appears to have been raised as to the regularity of the proceedings, if the statute in question is to be sustained as constitutional, and not held to be restricted by the provisions of the general statute limiting the amount of indebtedness which counties and townships may incur in any one year for the construction of highways and bridges. The statute has been before the court in three different cases. Township Board of Ecorse v. Board of Supervisors of Wayne County, 75 Mich. 274, 42 N. W. 831; Osborne v. Lindow, 78 Mich. 606, 44 N. W. 414; Township of Frenchtown v. Board of Supervisors of Monroe County, 89 Mich. 204, 50 N. W. 757. In none of these cases is the constitutionality of the act determined, although the act has been held not to cover a drawbridge, and some doubt has been cast upon the validity of the act. The present case would seem to render it necessary for us to determine definitely the question of the constitutionality of this act. The constitutional provision (article 10, § 9) reads as follows: "The board of supervisors of any county may borrow or raise by tax one thousand dollars for constructing or repairing public buildings, highways or bridges; but no greater sum shall be borrowed or raised by tax for such purpose in any one year, unless authorized by a majority of the electors of such county voting thereon." The general statute fixing the powers of boards of supervisors (Comp. Laws, subd. 7, § 2484) is as follows: "To borrow or raise by tax upon such county any sums of money necessary for any of the purposes mentioned in this act: Provided, that no greater sum than one thousand dollars shall be borrowed or raised by tax in any one year, for the purpose of constructing or repairing public buildings, highways, or bridges, unless authorized by a majority of the electors of such county voting therefor as hereinafter provided." It will be seen that this simply follows the provisions of the Constitution. The question, then, is whether this limitation of power excludes the right of the Legislature to provide for the construction of a bridge across the stream forming the boundary of the two townships, and to repose the duty of determining the relative proportion of cost to be borne by the different townships in the board of supervisors. That in the absence of constitutional restrictions such a power exists in the Legislature we think is fully settled by the adjudicated cases. Brayton v. City of Fall River, 124 Mass. 95; Guilder v. Town of Otsego, 20 Minn. 74 (Gil. 59); Guilder v. Town of Dayton, 22 Minn. 366; City of Haverhill v. Inhabitants of Groveland, 152 Mass. 510, 25 N. E. 976; Town of Underhill v. Town of Essex, 64 Vt. 28, 23 Atl. 617; Bulkeley v. Williams, 68 Conn. 131, 35 Atl. 24, 421, 48 L. R. A. 465; Town of Kirkwood v. Newbury (N. Y.) 26 N. E. 10; People v. Board of Supervisors (N. Y.) 40 N. E. 738. The question is thus presented whether the restrictions of the Constitution above quoted apply to such a power as is here delegated to the board of supervisors. We think it very clear that it does not. The restriction is as to borrowing or raising by tax not to exceed the sum of $1,000, unless authorized by a majority of the electors of the county. It is manifest that in determining the amount of investment necessary for the construction of a bridge between two townships, and the proportion which each shall bear, the electors of other portions of the county have no possible concern or interest. It would seem to follow, therefore, that this restriction upon the power of the board is a restriction placed upon the power of the board in undertakings which affect the entire county.

It is suggested that it would be remarkable if the framers of the Constitution intended to restrict the entire county to an expenditure of $1,000, and should leave in the hands of the Legislature the authority to impose upon two townships a much larger burden. But the answer to this is that burdens of this character are generally imposed upon the locality peculiarly benefited, and not upon the county at large. The framers of the Constitution may well be said to have had in mind that the county would and should undertake such improvements only in rare cases, and that the burden should be left to rest where it belongs—upon the locality peculiarly benefited. The same reasoning which leads to this conclusion as to the constitutional provision of course applies with greater force to the restrictions of the general statute above quoted.

Reference is made by respondent's counsel to the case of Ada v. Kent County, 114 Mich. 78, 72 N. W. 35. This case construed a special act of the Legislature. Under the authority of this act, the Legislature assumed to impose upon the county a burden of $5,000, one-half to be raised in each of two years. This was in direct violation of the above-quoted provision of the Constitution, which limits the right to impose upon the county a tax of more than $1,000, without a vote of a majority of the electors of the county voting thereon. It was said in that case: "What the supervisors are prohibited by the Constitution from doing, the Legislature does not possess the power either to do itself, or to compel the boards of supervisors to do."

It was also urged that section 4131 of Miller's Compiled Laws provides that where it is necessary to raise a sum in excess of $2,000 for building or repairing any bridge in a township, the question shall be submitted to a vote of the electors of the township, and that this constitutes a restriction upon the power conferred upon the board of supervisors by Act No. 62, Pub. Acts 1889. But this cannot be so, for the reason that section 4131 relates to bridges wholly within the

township, while Act No. 62 relates to bridges partly within two townships, and in its very nature was calculated to provide for a construction of bridges when one, at least, of the townships refuses to co-operate with the adjoining township in its construction. A similar petition was presented at the October session of the board, and refused. A new petition was presented at an adjourned meeting in January, and it is claimed that, as the former had not been reconsidered, the subsequent proceeding was illegal. We think this objection is without force, as the proceeding instituted was essentially a new proceeding, based upon a new petition.

We think the writ of injunction should not have been allowed, and the application for mandamus will be granted. As the case involves a public question, no costs will be awarded to either party.

The other Justices concurred.

HOPKINS et al. v. CROSSLEY et al.*

(Supreme Court of Michigan. April 7, 1903.)

CORPORATIONS—DISSOLUTION — CHARITABLE TRUST—INVALIDITY—DISPOSITION OF RES.

1. An incorporated volunteer fire department, after the purpose of its organization had ceased, created a trust by which it was directed that all of its property should be converted into money, except certain pictures, $500 paid to each of the then existing members, $1,500 to purchase a bed in perpetuity in each of the several hospitals of the city, to be devoted to specified uses, and the balance as a trust of personal property only, the income to be applied to the relief of the poor and needy or disabled members of the corporation and their families, other poor, needy, and disabled members of any future fire department of the city, and for the relief of other needy and worthy persons designated by the trustees, and for the repair of lots and monuments of firemen erected in cemeteries. *Held*, that such trust was only sustainable as a charity, and, since the doctrine of charitable uses did not exist in Michigan, the trust was void.

2. The trust res should be divided among the existing members of the corporation.

Appeal from Circuit Court, Wayne County, in Chancery; George S. Hosmer, Judge.

Bill by Robert Hopkins and others against Luke Crossley and others to set aside a trust. From a judgment in favor of defendants, plaintiffs appeal. Reversed.

John J. Speed and Robert T. Speed, for appellants. Fred A. Baker, for appellees.

HOOKER, C. J. The members of the old volunteer fire department of Detroit were incorporated in 1840 by special act of the Legislature, and given the right of perpetual succession. Laws 1840, p. 13, No. 14. Section 6 of the act provided that "the interest arising from the funds of the said corporation, except sufficient to defray incidental expenses, shall be appropriated to the relief of such indigent and disabled firemen and their families, as may be interested in the fund, and who may, in the opinion of the majority of the trustees, be worthy of assistance." This section was amended in 1869 to read as follows, viz.: "That the funds of the said corporation, and the interest thereon, shall be appropriated and used in carrying out the objects and purposes of said corporation, defraying its incidental expenses, providing for the relief of indigent and disabled members of the corporation, their widows and orphans, as well as for the maintenance of an institution or institutions for moral and intellectual improvement, and the relief and instruction of such homeless and destitute persons of the city of Detroit as they may select, and for no other purposes whatever." 3 Laws 1869, p. 1444, No. 440. The volunteer fire department was abolished by the organization of a paid department in 1867. Laws 1867, p. 931, No. 453, § 2. The corporate organization of the old department was maintained until 1886. Shortly before that time a meeting was held, at which 80 of a total of 116 members were present, and, after hearing the report of a committee appointed by the meeting, said report was adopted by a unanimous vote of the 80 present. The substance of the report was as follows: It recommended: (1) That the property be converted into money, with the exception of certain paintings, which should be turned over to the Art Museum, in trust, and, if that should cease to exist, then to be delivered to the Public Library. (2) That $58,500, or so much of said sum as should be necessary for the purpose, should be used to pay each one of the existing members of the corporation the sum of $500. (3) That $15,000 should be used in purchasing a bed in perpetuity in each of several hospitals of the city, naming them, to be devoted to specified uses. (4) That the balance of the fund should be placed in the hands of three trustees, to be named by the corporate board, as a trust of personal property only, and that the income to be derived from such fund should be applied by them "to the relief of poor and needy or disabled members of this corporation and their families, so long as any of them live; that, secondly, said income shall be applied to the relief of any poor, needy, or disabled members of the present active, or any future fire department of the city of Detroit; that, thirdly, said income shall be applied to the relief of any other needy and worthy persons who may be designated from time to time by the trustees hereinafter mentioned. That said trustees may also use, in their discretion, a portion of the income, from time to time, in keeping the lots and monuments erected in the cemeteries of Detroit in honor of the firemen of said city in repair. That whenever the trustees, in purchasing a bond or security, shall pay a premium therefor, they shall retain out of the interest such sums annually as will restore to the fund at the maturity of the bonds or security exa-

*Rehearing denied September 15, 1903.

Digitized by Google

what was taken therefrom at the time of the purchase; and that said trustees are also charged with the duty of looking after the beds in said hospitals, to the end that they be devoted to the uses and purposes for which they were purchased." Provision was made for the appointment of trustees to fill such vacancies as should occur. (5) That when the foregoing plan should be carried out proceedings be taken for the voluntary dissolution of the corporation. Accordingly the proper officers executed an indenture to three persons, named as trustees, reciting the proceedings mentioned above, and the proceedings of the corporation and board thereafter taken, to carry out said report so adopted, and that the property had been converted into money, and $500 paid to each member, the delivery of the paintings as provided, the purchase of the beds as directed, the selection of trustees and their acceptance, and thereby conveyed the remaining property, amounting to $20,000, to said trustees. This writing was executed in 1887, and its provisions have been carried out since. The corporation was duly dissolved thereafter. The bill in this cause was filed by 24 of 48 survivors of the members of the defunct corporation for the purpose of having the trust declared void. They pray that the trustees be required to distribute the funds, principal and interest, among the surviving members of the corporation. The trustees answered, and a hearing upon the merits was followed by a dismissal of the bill, with costs. The complainants have appealed.

It seems to be conceded that this trust can be sustained only upon the theory that it is a conveyance to charitable uses. Complainants contend that the doctrine of charitable uses does not exist in this state, while defendants insist that it does so far as to cover conveyances of personal property for charitable uses, though they admit that it does not as to real estate. It is a significant fact that no case has been called to our attention in which the doctrine has been enforced, either as to real or personal property. The case of Methodist Church v. Clark, 41 Mich. 741, 3 N. W. 207, discussed the question, and it was then pointedly said by Mr. Justice Cooley that the statute of Elizabeth was repealed in 1810, and that "there is no evidence that any pre-existing law on the subject has ever been recognized in this state." Counsel for the defendants say that this language was not necessary to a decision of the case, for the reason that the statute against perpetuities was sufficient to require the disposition made of that case, and that what was said about charities was dictum. Assuming this as a premise, he proceeds to argue that this trust can be maintained because of an absence of a statute restraining alienation of personal property, in which respect Michigan statutes differ from those of New York, from which fact he urges a distinction between the law declared in New York and the rule which he invokes to govern this case. If it can be said that the only obstacle in the way of relief to the complainants is the statute against perpetuities, his contention might be sustained. Again, the statute of uses and trusts (chapter 238) does not affect the question, for it affects personal property only. Ledyard's Appeal, 51 Mich. 623, 17 N. W. 208. We find it necessary, therefore, to ascertain whether the case of M. E. Church of Newark v. Clark, supra, is controlling. In that case a testator conveyed to trustees certain lands, "in trust that they shall erect and build * * * a church for the use of members of the M. E. Church, and in further trust and confidence that they shall at all times forever hereafter permit such ministers to preach therein," etc. The court first discussed the case upon the assumption that the trust was for the exclusive benefit of the local society, and upon that theory held that the trust was void, as conflicting with the principle of the general statute against perpetuities. Comp. Laws 1871, § 4082. If a private trust, as assumed, this would doubtless be true. We now come to what is said to be a dictum. The court seems to have considered it necessary to go farther. It did not leave the decision to rest upon the assumption that this was a private charity, for, as was said, the terms of the trust were somewhat ambiguous, and the deed is open to an interpretation which would preclude any exclusive appropriation by the local society. While the court did not decide that this was a public charity, it may be thought to have intimated that it might be, and called attention to a case where a similar trust was discussed. See M. E. Society v. Bennett, 39 Conn. 293. If, as defendant's counsel have chosen to admit, the statute against perpetuities in relation to real property is applicable to lands conveyed to charitable uses, as it was held to be to lands conveyed to a private trust or use, this might easily have been said, and more would have been unnecessary; but the court did go further, as already said, and, if it was necessary to do so, to dispose of this feature of the case before it. What was said was more than a dictum. Evidently the court thought it necessary, and it can hardly be said to have supposed that what it said was obiter. We will, however, examine the question further. Counsel's seeming concession that the statute against perpetuities in land applies to land conveyed to charitable uses may not correctly state the law. On the contrary, it has been held in many cases, if it is not the uniform doctrine, that "the rule against perpetuities does not apply to a gift of a charity." See a discussion of this subject in Perry on Trusts, § 384, and section 736 et seq., and notes, where the distinction between charities and trusts (proper) is drawn. See, also, the text and authorities cited in 5 American

& English Enc. of Law, at page 902. It is significantly said in a note to the last citation that "while provisions against perpetuities are found in several states, among which is Michigan, the validity of charitable trusts has not been attacked on that ground." This is true of the opinion in M. E. Church v. Clark. We see from the foregoing that the court might readily have believed, as we think it did, that its decision could not be left to rest on the statute prohibiting perpetuities, if it was to call the trust a charitable one. It understood that the statute was no answer to such a claim, and it went on to say: "If the law of charitable uses were in force in this state, the trust might be upheld under its rules. But the law is generally referred to as the 'Statute of Elizabeth,' commonly called the 'Statute of Charitable Uses,' which, with other English statutes, was repealed in Michigan in 1810. 1 Territorial Laws, 900. There is no evidence that any pre-existing law on that subject has ever been recognized in this state." See, also, Hathaway v. New Baltimore, 48 Mich. 254, 12 N. W. 186; Harrington v. Pier (Wis.) 82 N. W. 345, 50 L. R. A. 307, 76 Am. St. Rep. 924.

We are convinced that the rule laid down is not a dictum, and that the question was settled in that case. It is urged that this holding was wrong, and that the court of chancery, having the powers of the English court of chancery, has a jurisdiction over charities independent of the statute of charitable uses, one whose origin antedated such statute. It must be admitted that many authorities sustain this contention, but to adopt it we must overrule authorities in this state of long standing, which have been followed by the profession and the courts. The conflict among the decisions of other states indicates that the doctrine contended for may be of questionable policy, and, if it is not, a remedy can readily be applied. We have felt reluctant to hold invalid this charitable trust, which seems a meritorious one, but we see no escape from that responsibility.

The first, second, and third prayers of the bill will be granted, and it is further decreed that the trustees distribute, under the direction of the circuit court, among the persons who shall be shown to be entitled thereto, the fund in their possession. No costs will be allowed. The other Justices concurred.

FRIESENHAN v. MICHIGAN TELEPHONE CO.

(Supreme Court of Michigan. Sept. 15, 1903.)

TELEGRAPHS AND TELEPHONES—WIRES—SAGGING—INJURIES TO PERSONS ON STREETS—NEGLIGENCE — CONTRIBUTORY NEGLIGENCE —QUESTIONS FOR JURY.

1. Defendant telephone company, in stringing a wire around an angle in a street, erected a guy wire to stay the pole at one end of the elbow, to prevent the pole being drawn over and the wire sagging. The guy wire was fastened near the top of the pole, and extended to another pole, located between the sidewalk and the curb, fastened about 10 feet from the ground, crossing above the pavement. Plaintiff was injured by his wagon coming in contact with the wire in the daytime, which had then sagged to within a few feet of the ground. Defendant contended that the sagging was due to an exceptionally severe storm, which had been very destructive to poles and wires within the city, and that it had procured all the help possible, in addition to its regular employés, to repair the damage, and that it had no notice of the sagging of this particular wire. *Held*, that defendant's negligence and plaintiff's contributory negligence were questions for the jury.

Error to Circuit Court, St. Clair County; Nahum E. Thomas, Judge.

Action by Matthew Friesenhan against the Michigan Telephone Company. From a judgment in favor of defendant, plaintiff brings error. Reversed.

The following is the map referred to in opinion:

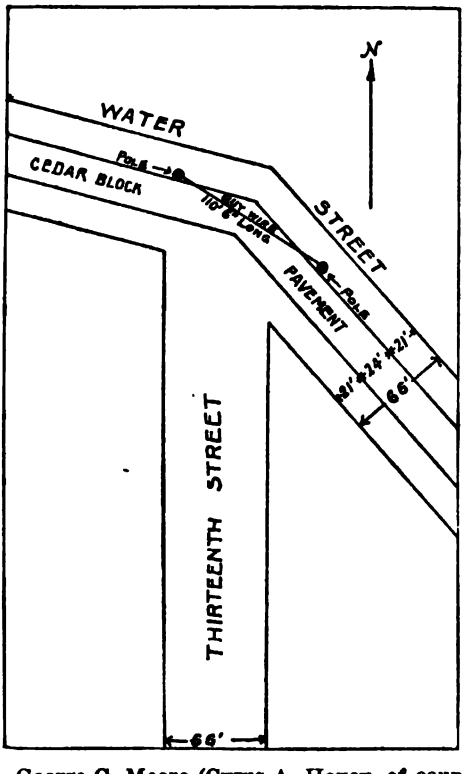

George G. Moore (Cyrus A. Hovey, of counsel), for appellant. Lincoln Avery (Joseph Walsh, of counsel), for appellee.

HOOKER, C. J. The map accompanying this opinion will show the situation of defendant's wires, which extended along Water street in Port Huron. It is noticeable that Water street is not straight. From the elbow shown on the map, it extends west, and in erecting the wires it was deemed prudent to stay the pole west of the elbow, to prevent it from being drawn over to the

Digitized by Google

westerly by the weight of the wires to the west of it, thereby occasioning sagging. This stay consisted of a guy wire, fastened near the top of the westerly pole, and extending to the pole southeast of the elbow, and fastened about 10 feet above the ground. The poles were set just outside of the curb line, between the sidewalk and the curb, and the effect was to cause the guy wire to cross above the pavement. The plaintiff, a milkman, was driving in his wagon, when his horse drew the wagon against the wire, and injured him. This was on Friday, in the daytime, and the wire had then sagged within a few feet of the ground. The defendant showed that on the previous Sunday a severe storm of snow, sleet, and rain, accompanied by wind and freezing weather, set in, and continued for 30 hours; that it was exceptionally severe, and very destructive to the poles and wires of telegraph, telephone, and electric lighting systems, many poles and wires being broken, twisted, and down all over the city of Port Huron, as well as other cities, to the great danger of the public; that the streets were blocked with snow, and poles and wires covered with ice; and that the sagging of this guy wire was due to this cause. It was shown that defendant set its men at work repairing damages at once where it considered the danger the greatest, and procured what help it could, in addition to its regular force, but had difficulty in finding men who were competent, in view of the condition of wires about the state causing an unusual demand, and from the danger arising from the crossing of wires with others carrying high currents. The defendant had no notice of the sagging of this particular wire, which was one of many of its wires affected by the storm. The circuit judge directed a verdict for the defendant.

We are of the opinion that, under the evidence contained in the record, the case should have gone to the jury upon the question of defendant's negligence and plaintiff's contributory negligence.

The judgment is reversed, and a new trial ordered. The other Justices concurred.

CITY OF MUSKEGON v. ZEERYP.

(Supreme Court of Michigan. July 14, 1903.)

MUNICIPAL CORPORATIONS — HAWKERS AND PEDDLERS—LICENSES—ORDINANCE—VALIDITY—INTERSTATE COMMERCE.

1. A city ordinance authorized by its charter, providing that no person shall engage in hawking or peddling in the streets of the city without a license, and that the amount to be paid for the license of peddlers of spices, teas, coffees, etc., shall be $10 for a week and $50 for a year, was valid.

2. A New Jersey corporation engaged in the sale and distribution of teas, coffees, and spices maintained a warehouse in Grand Rapids, from which its trade in Michigan was supplied. The corporation furnished defendant with a horse and wagon, and he solicited orders from door to door, and at intervals ordered from the warehouse at Grand Rapids a sufficient amount of goods to fill the same, whereupon he delivered the goods to his customers, collected the price, retained the commission, and remitted the balance. The house at Grand Rapids did not know what customers defendant had, or their names, and simply filled defendant's orders for the goods. *Held*, that defendant was not engaged in interstate commerce, so as to exempt him from liability under a city ordinance prohibiting peddling without a license.

Error to Circuit Court, Muskegon County; Fred J. Russell, Judge.

James Zeeryp was convicted of violating a city ordinance against peddling, and he brings error. Affirmed.

W. W. Wicker, for appellant. Alex. Sutherland, for appellee.

MOORE, J. The respondent was convicted of violating an ordinance of the city of Muskegon. He has brought the case here by writ of error before sentence.

The agreed facts are as follows:

"Defendant James Zeeryp is a resident of the city of Muskegon, and for the past nine years has been a local agent of the Grand Union Tea Company, a New Jersey corporation, whose headquarters are at Brooklyn, N. Y. When defendant first started in business, he was furnished with a sample case, and went from door to door in said city of Muskegon, soliciting orders for teas, coffees, spices, baking powders, and flavoring extracts and essences, and in time his business grew and he had regular customers from whom he received orders and delivered goods. At the present time, and for a number of years past, defendant has been furnished by the Grand Union Tea Company with a covered delivery wagon and horse. On this wagon, in large letters, is written, 'Grand Union Tea Company, Tea, Coffee, Baking Powders and Flavoring Extracts;' the said horse and wagon being the property of the Grand Union Tea Company. His custom is to drive his wagon from door to door in said city, and solicit orders from his regular customers for future delivery, and at the same time deliver goods theretofore ordered. These orders he entered in a book that he carried with him, and the goods were delivered at a certain time, and once a week or oftener he sent for enough tea, coffee, spices, baking powder, and flavoring extracts and essences to fill the orders so taken, to the Grand Rapids warehouse of the Grand Union Tea Company, to be filled there. He did not send the names of the persons ordering goods, or the amount each ordered. On receipt of the packages from Grand Rapids, defendant would deliver said teas, coffees, spices, baking powders, and flavoring extracts and essences, and collect the price. The defendant transacted his entire business with the warehouse of the Grand Union Tea Company at Grand Rapids, and was required to account to the Grand Union Tea Company for all goods received by him. The Grand Rapids agent of the tea company shipped the goods to the defendant, and char-

Digitized by Google

ged the price thereof to him. Defendant received a commission on all goods ordered and delivered by him. The branch store and warehouse for Western Michigan is in Grand Rapids, and goods were sold at retail at said store, and said branch store paid taxes on said stock in Grand Rapids. The branch warehouse received its goods from Brooklyn, N. Y., in the original packages, for the purpose of filling orders of subagents, and the original packages of goods were shipped to Grand Rapids, and there broken and used solely for the foregoing purposes. That it was for soliciting orders, delivering goods so ordered without a license, as required by the ordinance of the city of Muskegon, in said city, in the manner hereinbefore mentioned, and not otherwise, was complaint herein made and warrant issued. That all goods sold and delivered by defendant were goods shipped by said Grand Union Tea Company from its headquarters at Brooklyn, N. Y., consigned to themselves at Grand Rapids, Michigan, and by them kept in their warehouse in Grand Rapids until the original packages were there broken and used for the purpose hereinbefore stated. That said defendant did not own any of the goods for the sale of which he was soliciting orders, but the same were all owned by the said Grand Union Tea Company until the delivery to the respective customers. That defendant has been a resident of Muskegon ten years and upwards, and now resides at No. 62 Sanford street, and pays taxes on his real estate and personal property to said city. The Grand Union Tea Company does not pay any license or taxes on its horse and wagon, stock, or business in the city of Muskegon, nor does any one in its behalf. Defendant did not have a license, as required by the ordinance of the city of Muskegon, at the time of his arrest and conviction as aforesaid."

The material portions of the ordinance read as follows:

"No person or persons shall engage in the business of hawking, pack or other peddling in the streets or other public places, or from door to door, or in selling any article of trade or commerce whatsoever from a stand, stall, cart, wagon, pack, basket, or in any manner or on any of the public streets, parks, grounds, alleys, or places in the city of Muskegon, without first having obtained a license therefor."

"The amount to be paid for the license provided for in this ordinance shall be as follows, viz.: For huckstering, hawking, peddling * * * spices, teas, coffees, baking powders, flavoring extracts and essences, $10.00 for one week and $50.00 for one year. * * * For groceries not herein otherwise enumerated or especially provided for, $2.00 for one week, $5.00 for one month, and $25.00 for one year; * * * jewelry, watches, clocks, silverware, watch chains and charms, chains, spectacles, eye-glasses, and optical instruments, $3.00 for one day and $15.00 for one week; * * * all other articles of trade or commerce not herein enumerated or specially provided for, $1.00 for one day, $3.00 for one week and $10.00 for one month, and $25.00 for one year. Provided that no license shall be issued for any greater length of time than one year."

Section 5 provides the ordinance shall not apply to any farmer or gardener selling or offering for sale the product of his own farm or garden.

Section 6 provides: "Any person or persons who shall go about from house to house or place to place and sell or offer to sell any article of trade or commerce to be delivered then or in the future, shall be deemed to be a hawker and peddler within the meaning of this ordinance."

The city of Muskegon has a special charter, conferring upon the common council, among other things, the following powers: "In addition to the other powers herein conferred upon it, the council shall have the power to enact, make, continue, establish, modify, amend and repeal such ordinances, by-laws and regulations as it may deem necessary within said city for the following purposes: To license hucksters, peddlers, * * * in the business of hawking and peddling (directly or by canvassing by subscription) of goods, wares and merchandise of any kind, or property or thing, by person going from place to place in the city for the purpose, or from any stand, cart, vehicle or other device in the streets, highways and in and upon the wharves, upon places or spaces, stores, offices and business blocks and places, public grounds or buildings in said city."

The objections presented to the validity of this ordinance, as stated by counsel, are: "(1) The common council has no authority to license the soliciting of orders for future delivery of goods, wares, and merchandise or the subsequent delivery of goods, etc., so ordered. (2) The license fee fixed by the ordinance for spices, teas, coffees, baking powders, flavoring extracts, and essences is excessive, unjust, oppressive, and in restraint of trade. It amounts to a tax, and not a license fee. (3) The ordinance as a whole is unreasonable, and not uniform. (4) The license fees as fixed by the ordinance discriminate between trades and between the same general class of goods, and is void for such discrimination. (5) As applied to the case at bar, the ordinance, even if valid, is inoperative, being in restraint of interstate commerce." Counsel cite a great many cases in support of these objections. It must be conceded that the authorities are not uniform, but the questions involved are not new in this state. The validity of an ordinance much like this is sustained in People v. Sawyer, 106 Mich. 428, 64 N. W. 333, and the cases therein cited. The following Michigan cases are also in point: Grand Rapids v. Braudy, 105 Mich. 670, 64 N. W. 29, 32

Digitized by Google

L. R. A. 116, 55 Am. St. Rep. 472; Grand Rapids v. Norman, 110 Mich. 544, 68 N. W. 269; People v. Baker, 115 Mich. 199, 73 N. W. 115; People v. Hotchkiss, 118 Mich. 59, 76 N. W. 142; People v. Blom, 120 Mich. 45, 78 N. W. 1015; Spanish Fort City v. Mortenson (Utah) 24 Pac. 620. See, also, Saulsbury v. State (Tex. Cr. App.) 63 S. W. 568, for an instructive discussion. Counsel say this court has held such an ordinance invalid, as in contravention of interstate commerce; citing People v. Bunker (Mich.) 87 N. W. 90. We think the cases quite unlike. In the case cited Mr. Bunker solicited orders for knives, which orders he forwarded to his employer in another state, and the employer made the delivery to the customer. In the case at bar the orders were taken by respondent. They were not sent out of the state, and they were not in fact filled by any one except the respondent. The house at Grand Rapids did not know what customers respondent had, or their names. The respondent ordered sufficient goods to fill his orders, and then filled them himself. This would also differentiate the case from the ordinary drummer or traveling man who takes orders and forwards them to the firm or employer he represents, and the employer causes the goods to be delivered to the customer.

The verdict is affirmed, and the case will be remanded for sentence. The other Justices concurred.

WATERS et al. v. JOHNSON et al.

(Supreme Court of Michigan. Sept. 22, 1903.)

MECHANICS' LIENS—CLAIMS—NAME OF OWNER — STATEMENT — STATUTES — CONSTRUCTION—CORRECTION OF ERRORS—ESTOPPEL.

1. Comp. Laws, § 10,714, requires a mechanic's lien claim to contain the name of the owner, part owner, or lessee, if known, and to be verified by affidavit, and section 10,715 requires a copy of such statement to be served on the owner, part owner, or lessee of the premises within 10 days after the filing thereof. *Held*, that the owner referred to in such sections was the owner at the time the claim of lien was made, and a lien claim naming a person who had conveyed the property before the filing of the claim as the owner was insufficient.

2. Where a mechanic's lien claimant misstated the name of the owner of the property in his claim for a lien, which was verified, he was not thereafter entitled to excuse the mistake on the ground of ignorance, or that he did not know the owner's name, and was therefore not required to state the name of the owner, by Comp. Laws, § 10,714.

3. Where a mechanic's lien claimant filed a verified claim for a lien, stating the name of the owner as a person who had previously conveyed the property to another, the claimant could be relieved from such mistake only on proof of facts showing that the error was justly chargeable to the grantee of the property, so as to estop him from taking advantage of the error.

Appeal from Circuit Court, Van Buren County, in Chancery; John R. Carr, Judge.

¶ 1. See Mechanics' Liens, vol. 34, Cent. Dig. § 233.

Bill by Harlan P. Waters and others against Alva M. Johnson and others. From a decree in favor of complainants, defendant Elizabeth Stevenson appeals. Reversed.

David Anderson and Archibald Cattell, for appellant. Barnard & Lewis, for appellees.

CARPENTER, J. This is a suit in chancery to enforce a mechanic's lien. Defendant Stevenson appeals from an order overruling a demurrer to complainants' bill of complaint. The bill avers that the labor and materials for which the lien is claimed were furnished under a contract between complainants and defendant Alva M. Johnson, in improving and repairing the house and barn of said Johnson, situated on the land described in said bill; that the first of said material and labor was furnished July 6, 1901, and the last December 28, 1901; that on February 10, 1902, complainants filed in the office of the register of deeds of Van Buren county (the county in which the property in controversy is situated) their claim of lien, and served the same on said Alva M. Johnson; and that defendant Alva M. Johnson and his wife, Ellen M. Johnson, on December 21, 1901, by warranty deed, conveyed the property in controversy to defendant Elizabeth Stevenson, and that said deed was recorded in the office of the register of deeds of Van Buren county, in Liber 111 of Deeds, at page 540. The said claim of lien is annexed to, and made a part of, complainants' bill. It states that complainants furnished certain labor and materials in and for improving and repairing a certain house and barn situated on the land thereinafter described, "in pursuance of a certain contract with Alva Mason Johnson, the owner; and also for certain materials furnished in and for improving and repairing a certain house and barn, situated on the land hereinafter described, in pursuance of a certain contract with Alonzo Curtiss, contractor, * * * and that there is justly and truly due (the complainants) therefor from the said Alva M. Johnson, over and above all legal set-offs, the sum of $305.33, for which amount (they) claim a lien on said land, of which Alva Mason Johnson is the owner." Said claim of lien is sworn to by complainant Waters. The grounds of the demurrer may be classified under three heads, which we will proceed to state and dispose of.

First. That said bill did not sufficiently state the terms of the contract and of its performance. Respecting this ground, we think it unnecessary to say more than that in our opinion it is not well taken.

Second. That it appeared by the claim of lien that a portion of the amount claimed was furnished to Alonzo Curtiss, a contractor; that the bill was defective in not stating what amount was furnished to Curtiss, and in not making him a party. The basis of this ground of demurrer is the following

Digitized by Google

statement in the claim of lien: "And also for certain materials furnished in and for improving and repairing a certain house and barn, situated on the land hereinafter described, in pursuance of a certain contract with Alonzo Curtiss, contractor." The only construction we are able to place upon the claim of lien compels us to regard the foregoing statement as surplusage. It seems to have no connection whatever with the claim asserted against defendant Johnson, which, it is stated, amounts to $305.33. In our judgment, therefore, this ground of demurrer is not well taken.

Third. That the case made by the bill is fatally defective, because it shows that complainants named as owner in their claim of lien, and served notice of said claim upon, not defendant Stevenson, but defendant Johnson. It appears by the bill that defendant Johnson owned the property at the time that plaintiffs entered into their contract to improve and repair it, and that defendant Stevenson owned it, and had owned it for more than a month, when the claim of lien was made. In making and serving the claim of lien, should the lien claimants have regarded defendant Johnson or defendant Stevenson as the owner of the premises? The statutes which provide for this claim and service are sections 10,714 and 10,715, Comp. Laws 1897. Section 10,714 provides for the claim of lien. It requires the claim to contain, among other things, "the name of the owner, part-owner, or lessee, if known," and to be verified by affidavits, and the form therein contained has this recital, "of which ———— is the owner (or part-owner or lessee, as the case may be)." Section 10,715 requires a copy of said statement, "within ten days after the filing thereof," to be served "on the owner, part-owner or lessee of said premises," and that "proof of such service shall be filed in the office of the register of deeds * * * before any subsequent proceeding shall be taken for the enforcement of such lien." We think it obvious that the owner referred to in both these sections is the owner at the time the claim of lien is made. In our opinion, the above-quoted language of the statute admits of no other construction. The evident purpose of the statute is to give notice to the party most vitally interested that a lien is asserted against his property. We cannot suppose that the law contemplated so futile a proceeding as a notice to one who has no interest whatever in the property, simply because he once had an interest therein. While this question has never before received the attention of this court, decisions in harmony with these views have been made in several of our neighboring states. See Amidon v. Benjamin, 128 Mass. 534; McPhee v. Litchfield, 145 Mass. 565, 14 N. E. 923, 1 Am. St. Rep. 482; Derrickson v. Edwards, 29 N. J. Law, 468, 80 Am. Dec. 220; Corbett v. Chambers, 109 Cal. 178, 41 Pac. 873; Sprague Inv. Co. v. Mouat L. & Inv. Co., 14 Colo. App. 107, 60 Pac. 179; Willamette L. Co. v. McLeod, 27 Or. 272, 40 Pac. 93; Collins v. Snoke, 9 Wash. 566, 38 Pac. 161.

Complainants contend that they were under an obligation to name in their claim of lien, and to serve notice upon, the true owner only when his name was known to them, and that it is not in this case to be presumed that her name was known to them. The basis of this contention is the language of section 10,714, requiring the statement of the name of the owner, "if known." It is true that lien claimants are by this language relieved from the obligation of stating in their claim the owner's name, if in fact his name is not known. See McPhee v. Litchfield, 145 Mass. 565, 14 N. E. 923, 1 Am. St. Rep. 482; Durling v. Gould, 83 Me. 134, 21 Atl. 833. The lien claimants must take advantage of this language when they make their claim of lien. If, as in this case, they file a statement in which they swear, in effect, that they do know the owner's name, the statute does not relieve them from the consequences of a mistake in stating that name. McElwee v. Sandford, 53 How. Prac. 89. It is to be noted that if the lien claimants are, by section 10,714, relieved from their obligation to state in their claim of lien the owner's name when they do not know it, there is nothing to indicate that their obligation in section 10,715, to serve the owner within 10 days, does not bind them within that time to ascertain his name. What, then, are the consequences of misnaming in the claim, and of failing to make service upon, the owner whose property it is sought to take? The statute, in our judgment, imperatively requires that said owner be named in the claim, save when his name is unknown, in which case it need not be stated, and that service be made upon said owner within 10 days. It follows, therefore, that when the lien claimants proceed against a certain person as the owner, and positively swear in their claim that he is the owner, they will not be permitted to excuse this mistake by pleading ignorance, unless, as hereinafter pointed out, that ignorance is justly chargeable to the owner himself. A contrary construction of the statute would defeat its evident purpose, that the owner, as well as others inspecting the record, should have notice that his interests are affected. One inspecting the record made by the complainants in this case could not suppose, as possibly he might if the claim of lien had not positively averred defendant Johnson to be the owner, that the interests of defendant Stevenson were in any way affected. It follows, therefore, that the suit of complainants must fail, unless under an amendment to their bill they can present proofs which will excuse their disregard of the provisions of the statute. If no such amendment is possible, we should, in reversing this case, not only sustain the demurrer, but dismiss complain-

Digitized by Google

ants' bill. If such an amendment is possible, we should remand the record to the court below. We are bound, therefore, in disposing of this case, to determine whether it is possible for complainants to make a case which would excuse the mistakes pointed out. We have already determined that these mistakes would not be excused simply because complainants did not know that defendant Stevenson was the owner of the property. If, however, defendant Stevenson so conducted herself as to lead complainants to believe that defendant Johnson continued the owner of said property, she would be estopped from taking advantage of their position now. If she neither took possession of the property in suit, nor recorded her deed, we think her conduct would have justified complainants, in the absence of any notice to the contrary, in asserting that said Johnson continued to be the owner of said property. The bill of complaint avers no fact directly bearing upon this question. While we cannot presume the existence of any such fact, it would be unjust to deprive complainants of all opportunity of proving it, if by any possibility it does exist.

The order of the court below overruling the demurrer will therefore be vacated, and the demurrer sustained. The case will be remanded to the court below, with directions to permit complainants to amend their bill, if, under the decision in this case, they are advised that such an amendment can be made. Defendant Stevenson will recover costs.

The other Justices concurred.

BANHAGEL v. SCHOOL BOARD OF SCHOOL DIST. NO. 1.

(Supreme Court of Michigan. Sept. 22, 1903.)

SCHOOLS AND SCHOOL DISTRICTS—FUNDS—APPROPRIATION—FINDINGS—EVIDENCE.

1. Where a notice of a school meeting stated that the purpose was to appropriate $1,200 of the surplus money arising from the one-mill tax in the treasury of the said school district for the purpose of building and paying for the construction of a schoolhouse for the district, and the proposition was carried, such vote did not operate as a general appropriation of $1,200, but only as an appropriation of that sum from the surplus of the fund specified.

2. By vote of a school district at a special meeting held in December, 1901, $1,200 was appropriated "from the surplus money arising from the one-mill tax now in the district treasury" to reimburse relator for a loss sustained in the construction of a school building. At the time of the meeting the district had on hand the sum of $558.78, which arose from the one-mill tax for the previous year, and which was a surplus. At the time of the meeting there had been levied a one-mill tax for the current year of 1901 and 1902 of $686.22, none of which had been paid over to the district, and but a small part of which had been collected. *Held*, that a finding that the surplus of $558.78, remaining from the previous year, had been previously appropriated, and become a part of the mill tax fund for the succeeding year, as authorized by Comp. Laws 1897, § 4665, subd. 12, was not justified by the fact that at the annual meeting the district treasurer reported that amount of money in the treasury belonging to the district, whereupon the meeting passed a resolution to raise by tax a definite sum for school purposes, and hence such surplus was properly applicable to payment of relator's claim.

Certiorari to Circuit Court, Branch County; George L. Yaple, Judge.

Certiorari by the state, on relation of Edward Banhagel, against the School Board of School District No. 1, to review an order denying a writ of mandamus to compel the issuance of a warrant to relator under special vote of the district. Order reversed.

V. H. & H. H. Smith, for relator. Campbell & Johnson, for respondent.

HOOKER, C. J. The relator applied to the circuit court for a writ of mandamus to compel the respondent, a school district board, to issue and pay to him its warrant for $1,200 for certain money raised by mill tax belonging to the school district. Issues were framed and submitted to the court without a jury, and we insert his findings of fact as at once showing the material issues, and his finding thereon:

"The parties in this cause being in court by their respective attorneys, ready for trial, and the issue joined therein having been brought on for trial before the court without a jury, and the said court having heard the proofs and allegations of the parties and the arguments of counsel, after due deliberation thereon finds:

"(1) That the relator, Edward Banhagel, under a contract with the respondent, built and constructed a schoolhouse, and received therefor in payment the contract price. That relator lost money upon the contract and building by reason of changed conditions which entailed to Banhagel a considerable loss, and that said relator had an equitable claim against respondent, or at least such a claim as would have been a proper basis for extra compensation by the said school district.

"(2) That on the 19th day of December, A. D. 1901, a special meeting of said school district was held, and a majority vote was had thereat to pay to said Edward Banhagel the relator the sum of $1,200 from the one-mill tax belonging to said district.

"(3) That of the amount to be thus appropriated from the one-mill tax the sum of $588.78 was in the hands of the treasurer of said school district, and was the surplus arising from the one-mill tax unused for the previous school year 1900 and 1901, but which had been turned over to the treasurer of said school district for the ensuing year, and had become a part of the one-mill tax fund for the year 1901. That $622.22 of said amount was the mill tax for the current school year 1901 and 1902, and had not at any time become a surplus fund, as pro-

Digitized by Google

vided by section 4665 of Miller's Compiled Laws of the state of Michigan.

"(4) That the fund from which the relator seeks to reimburse himself for losses sustained as aforesaid by reason of the vote of said school district was not at the time of said school meeting a fund which the said school district had power to appropriate to any other purpose than that of maintaining a school in the said district as provided by section 4665 of Miller's Compiled Laws of the state of Michigan.

"(5) That, if the relator has a claim against said school district capable of enforcement, that such claim is not enforceable under the present action to compel the payment of the same from the fund aforesaid. Writ denied.

"George L. Yaple, Circuit Judge."

Upon application of the relator, the second finding was afterwards amended to read as follows: "Second. That on the 19th day of December, A. D. 1901, a special meeting of said school district was regularly held, and a majority vote was had thereat to pay said Edward Banhagel, the relator, in recognition and settlement of his said claim, the sum of twelve hundred dollars from the one-mill tax belonging to said district."

The cause is before us on certiorari at the instance of relator. The proceedings under which this alleged appropriation was made were, first, a notice, which we assume to have been legally published, in which it was stated that the meeting was to be held "for the purpose of voting to appropriate twelve hundred dollars of the surplus money arising from the one-mill tax now in the treasury of said school district for the purpose of building and paying for building and constructing the schoolhouse of said school district. Dated December 13, A. D. 1901." The following is a copy of the record of the proceedings of the special meeting:

"Bronson Mich., Dec. 19th, 1901.

Special Meeting.

"The special meeting of the regular voters of school district No. 1, Bronson and Bethel, met pursuant to published notice at the school house in Bronson, Dec. 19th, 1901. The meeting was called to order by Mr. Warner, the Moderator. The call was also read by the Moderator. The Clerk read the itemized expense of building the school house. Motion was made to appoint Randall Powers and Harry Rupple for tellers. Motion carried. Motion was made to appoint A. L. Phillips and Alonzo Ruggles for Clerk. Motion was made to appoint John Shurtz as challenger. Mr. Rudd came forward and administered the oath of office, and the Moderator declared the election open. Time, 9:15 P. M. The ballot box was kept open for two hours and on counting the ballot, the following result was announced. Whole number of votes cast, 109.

"For the appropriation, Yea,	57
"For the appropriation, No,	52
	109

"The Moderator declared the appropriation carried by five majority. Adjourned.

"Wells Knapp, Director."

Passing any question that might arise over the sufficiency of a notice that failed to apprise the voters that this was an appropriation to cover an equitable claim, rather than a legal one, to pay which the district was bound by contract, we may say that this vote was no more than an appropriation of $1,200 from the surplus of a particular fund for the purposes mentioned. It is noticeable that it was not an appropriation of $1,200 to pay to the relator for extra compensation. But, as no point is made upon that, we will assume that the district so understood and intended it. It then becomes necessary to inquire whether this fund might lawfully be thus appropriated. The finding shows that the district had on hand in September the sum of $558.78, which arose from the one-mill tax of the previous year, and which was a surplus remaining after its having had nine months school for that year. Subsequently there had been levied a mill tax for the then current year—i. e., 1901 and 1902—of 686.22. None of this had been paid over to the district, and it is claimed that only a small portion of it had been collected by the township treasurers on December 19, 1901, which was the date of the special school meeting. At all events, it had not been reported to the district, and was not in "the treasury of said district," as per the notice above set forth. Comp. Laws 1897, § 4665, subd. 12, confers upon the voters at a school district meeting lawfully called the power "to appropriate any surplus moneys arising from the one mill tax after having maintained a school in the district at least eight months in the school year, for the purpose of purchasing and enlarging school sites, or for building or repairing school houses or for purchasing books for library, globes, maps and other school apparatus, or for any incidental expenses of the school." Under this provision it is clear that there was no surplus for the year 1901 and 1902 to appropriate, as the school had not been held eight months during that fiscal year. Neither was the fund in the district treasury as shown above. This eliminates that portion of relator's claim. The finding shows that the surplus of $558.78 remaining over from the previous year had been previously appropriated to and become part of the mill tax fund for the year 1901 by action of the district at its annual meeting. We assume that this finding was based upon the testimony that at the annual meeting held in September it was reported as a part of the school fund on hand, and that it was considered in determining how much

would be necessary to raise by tax to support the school for the next year. This finding of fact rests upon evidence which does not warrant it. The only proof upon the subject shows that at the annual meeting the district treasurer reported the amount of money in the treasury belonging to the district. Thereupon the meeting passed a resolution to raise by tax upon the district a definite sum for school purposes. We should not assume that there was an intention to appropriate the $558 surplus mill tax to such purpose in the absence of any action tending to show it. In the absence of definite action, we cannot assume that the voters intended to deprive the district of its control over this surplus as provided by Comp. Laws 1897, § 4665, subd. 12.

The order is reversed, and the record will be remanded, with directions to the circuit court to issue the writ as prayed for, for the sum of $588.78. The relator is entitled to costs of both courts. The other Justices concurred.

OLDS v. STATE LAND OFFICE COM'R (MICHIGAN LAND & LUMBER CO., Limited, Intervener).

(Supreme Court of Michigan. Sept. 22, 1903.)

HIGHWAYS—CONSTRUCTION BY STATE—PAYMENT IN SWAMP LANDS—SELECTION—JOINT RESOLUTIONS—CONSTITUTIONAL LAW.

1. Pub. Acts 1865, p. 693, No. 338, under which a contract for the construction of certain roads was made, provided that the state should not be chargeable with any of the expense, excepting as thereinafter provided, and for the purpose of aiding in the construction of the road, appropriated 320 acres (a mile) of swamp lands then subject to entry. The act also provided that the contract should be let in accordance with Act No. 117, p. 310, Sess. Laws 1859, which contained a provision that the contractor might elect to take his pay in money or in land, at $1.25 per acre. *Held*, that the provision of the act of 1865 limited the obligation of the state to payment in lands, and that the provision that the contract should be let in accordance with the act of 1859 did not empower the land commissioner to let the contract for a money consideration.

2. Since Act No. 338, p. 693, Pub. Acts 1865, authorizing a contract for the construction of roads, prohibited payment except in state lands, a provision of a contract thereunder that the contractor elected to take his pay in land was inconsequential and nugatory.

3. Where a contract for the construction of state roads was payable only in state swamp lands, the fact that the state land commissioner kept the account of the state with the contractor in dollars, on the basis that each acre of land was worth $1.25, the price at which state land was subject to sale at the time the contract was executed, was immaterial.

4. Relator's assignor contracted to construct certain roads in O. county, in consideration of swamp land in such county, subject to entry at the rate of 320 acres to a mile. At the time the contract was made, the state land was subject to sale at $1.25 per acre, and under the contract, relator's assignor became entitled to 799.10 acres of land. On completion of the contract, there were no lands subject to entry in O. county sufficient to satisfy the state's obligation, whereupon a joint resolution was passed, authorizing the contractor to take 799.10 acres of state swamp land from any lying in the lower peninsula, not otherwise appropriated. Before this resolution was passed, Act No. 97, p. 164, Pub. Acts 1869, was passed, declaring that all lands thereafter offered for sale should be at the rate of $8 an acre. *Held* that, as it did not appear that the intrinsic value of the land to which contractor's assignee was entitled under Act No. 18, p. 477. Pub. Acts 1887, was greater than that held by the state in 1865, the resolution was not in violation of Const. art. 4, § 21, as an attempt to grant the contractor extra compensation after the service had been rendered or the contract made.

On rehearing. Affirmed.

CARPENTER, J. This case was decided by this court July 10, 1901, and will be found reported in 86 N. W. 956. A rehearing was ordered, and there are now in the controversy two distinct issues, viz.: (a) Is the land in controversy swamp land? This issue does not, however, relate to so much of the land as was involved in the suit of State v. Lake St. Clair Fishing & Shooting Club, 127 Mich. 580, 87 N. W. 117, that having been determined in that case to be swamp land. (b) Is relator's scrip valid to take the land in question, if it is in fact swamp land? This decision relates only to the second of these issues, and it concerns only relator and the intervening petitioner, the Michigan Land & Lumber Company, Limited; for, if the land is in fact swamp land, the scrip of the intervener will take it if that of relator will not. It leaves to be subsequently determined in this suit the first issue. All the questions involved in this case relate to the construction and validity of a joint resolution passed by the Legislature in 1887 (see Pub. Acts 1887, p. 477, No. 18), under which relator claims his rights. Intervener contends: First. That the proper construction of said joint resolution does not give relator the right to take the land in question with his scrip. Second. That said joint resolution is unconstitutional, because it is prohibited by section 31 of article 4 of our state Constitution, which provides: "The Legislature shall not audit nor allow any private claim or account." Third. That said resolution is unconstitutional, because it is prohibited by section 21 of article 4 of our state Constitution, which provides: "The Legislature shall not grant nor authorize extra compensation to any public officer, agent or contractor, after the service has been rendered or the contract entered into."

We are entirely satisfied with our former opinion in so far as it relates to the first and second of the above-named objections, and shall refrain from further discussion of them. We will, however, proceed to discuss the third of said objections. The facts, so far as material to the question under consideration, are these: Relator obtained his scrip from the estate of William M. Ferry, deceased. That scrip evidenced the state's

Digitized by Google

obligation to compensate said estate for the services of said Ferry in building a road in the counties of Ottawa and Muskegon. This road was completed in 1867. By the law under which the contract to build said road was let, as well as by the contract itself, said Ferry was to be compensated by the conveyance of state lands then subject to entry, situated in the counties of Muskegon and Ottawa. Shortly after the completion of the contract, said Ferry received from the state a conveyance of all the land to which he was entitled in the county of Muskegon. There remained due him, however, 799.10 acres, which by the terms of said law and contract were to be selected from land subject to entry in said county of Ottawa. The law under which the contract to construct said road was made and the scrip earned is Act No. 338, p. 693, Pub. Acts 1865. That law contained this provision: "Provided that the state shall not be chargeable with any of the expense, * * * except as hereinafter provided. * * * For the purpose of aiding in the construction of said road, there is hereby appropriated 320 acres per mile of the swamp lands now subject to entry." The law also provided that the contract should be let in accordance with the provisions of Act No. 117, p. 310, Sess. Laws 1859. The act last named contained a provision that the contractor for the construction of roads might elect to take his pay in money or in lands at the price of $1.25 an acre. The contract to build the road in question contained a recital that the contractor had elected to take his pay in land. The books in the department of the commissioner of the state land office kept the account of the state with relator's assignor in dollars, on the basis that each acre of land was worth $1.25. All the land subject to entry at the time the contract was made and performed was for sale at $1.25 an acre. Upon the completion of the contract in 1867, there was not in Ottawa county, subject to entry, sufficient land, if there was any, to satisfy the state's obligation to relator's assignor. Therefore, the Legislature, in 1887, passed the joint resolution in question (see Pub. Acts 1887, p. 477, No. 18), giving relator's assignor the right to take in satisfaction of his claim 799.10 acres of the state swamp lands from any in the lower peninsula not otherwise appropriated. As the Legislature had in 1869 (see Act No. 97, p. 164, Pub. Acts 1869) passed the so-called "Graduation Act," by which lands thereafter offered for sale were placed on the market at the rate of $8 per acre, the effect of this resolution was to give 799.10 acres of land in 1887, which the state was holding at $8 an acre, in lieu of a claim for 799.10 acres of land, which the state in 1865 was holding at $1.25 an acre; in other words, the effect of the resolution gave land which the state in 1887 valued at $6,392.80 to satisfy a claim for land which in 1865 it valued at $998.88. Intervener contends that relator's assignor had a claim against the state for the amount of $998.88, payable in land, and that by the joint resolution under consideration he is allowed $6,392.80, payable in land, and that said joint resolution attempts to grant the contractor extra compensation, and is therefor unconstitutional.

If the assumption underlying this argument is well founded, the argument is conclusive. It will be observed, however, that the strength of the argument depends, not on the fact that an acre of land of the market value of $8 is exchanged in 1887 for an obligation to convey an acre of land of the market value of $1.25 in 1865 (a subject which will be hereafter referred to), but upon the assumption that the claim of relator's assignor was a money claim, payable in land. We are bound, however, to say that this assumption is not well founded. In our judgment it is not true, as assumed, that the state from 1867 to 1887 owed relator's assignor $998.88, payable in land. The provision of the act of 1865, that the contract should be let in accordance with the provisions of Act No. 117, p. 310, Sess. Laws 1859, did not, as contended by intervener, empower the commissioner therein named to let the contract for a money consideration. The provision in the act of 1865, "The state shall not be chargeable except as hereinafter provided," limited the obligation of the state to the lands thereinafter appropriated, and therefore clearly forbade its commissioner obligating the state to pay money to the contractor. Nor can we give any effect whatever to the recital that the contractor elected to take his pay in land, contained in the contract for the construction of the work in question. That recital is inconsequential and nugatory. He was bound to take his pay in land by the express language of the statute. It seems scarcely necessary to state that the books in the office of the land commissioner, showing the amount due to relator's assignor to be dollars instead of acres, had no effect upon the obligation of the state, which was fixed by an act of the Legislature. It follows, therefore, that in 1887 the state had no right to compel relator's assignor to accept money in satisfaction of this claim, and it was obligated to deliver to him 799.10 acres of land, situated in the county of Ottawa, and subject to entry in 1865. Was it extra compensation to give in lieu of this obligation other land not otherwise appropriated? The state had disabled itself from carrying out its agreement. It was therefore under an obligation to compensate the loss of relator's assignor, to deliver to him lands equal in value to those promised him. Unless, therefore, we can say that the land which the contractor gets under the joint resolution is of greater value than that to which he was entitled, we cannot say that he received extra compensation. It is true that the land promised was in 1865 subject to entry at

Digitized by Google

$1.25 per acre, and that the land delivered under the law of 1887, if it comes into the market at all, will, by virtue of the graduation act of 1869, be placed thereon at $8 per acre. Shall we say that because one gets land which the state in 1887 values at $8 per acre, in lieu of land which in 1865 it valued at $1.25 an acre, he is receiving extra compensation? We do not know that the land promised had not a greater intrinsic value than $1.25 an acre. In 1887 it may have been apparent to the Legislature that the land promised equaled or exceeded in value that which could be taken under the joint resolution. We cannot, therefore, say that the intrinsic value of the land held by the state in 1865 at $1.25 an acre is not as great as that of land held by the state in 1887 or in 1903 at $8 per acre. We cannot say that the intrinsic value of the land which relator will get in satisfaction of his obligation exceeds that promised him. The most that may be said is that it is possible that it may exceed that. This possibility gives this court no authority to declare unconstitutional a resolution passed in due form by the legislative branch of the government. All doubts of this character must be so resolved as to sustain the law. Rumsey v. People, 19 N. Y., at pages 46–49; Lusher v. Scites, 4 W. Va., at page 14 et seq. The result of this decision is to sustain our former opinion, which, like the present, was, as contended by intervener's counsel, "based upon the view that the measure of compensation to be paid the contractor was acres of land." It follows that relator is entitled to a mandamus requiring respondent to execute a deed of the land in controversy in the case of State v. Lake St. Clair Fishing & Shooting Club, 127 Mich. 580, 87 N. W. 117. Whether he is entitled to a deed of the remaining land in controversy depends upon the determination of the other issue involved in this suit, which, as heretofore stated, will be subsequently determined in this suit.

GRANT, J., did not sit. The other Justices concurred.

CASGRAIN et al. v. HAMMOND et al.

(Supreme Court of Michigan. Sept. 22, 1903.)

TRUST DEED—SUSPENSION OF ALIENATION—CONSTRUCTION—VALIDITY — PERPETUITIES —DISPOSITION OF TRUST RES—INTESTATE ESTATE—QUIETING TITLE—RIGHT TO SUE.

1. Comp. Laws, § 8796 (chapter 237, § 14), provides that every future estate shall be void in its creation which shall suspend the absolute power of alienation for a longer period than is prescribed by the chapter, and that such power of alienation is suspended when there is no person in being by whom an absolute fee in possession can be conveyed. Section 8797 (chapter 237, § 15) declares that the absolute power of alienation shall not be suspended by any limitation or condition whatever for a longer period than during the continuance of two lives in being at the creation of the estate, except in a single instance. *Held*, that under such sections a suspension of power of alienation in a trust deed for a particular period not based on lives is void, and that the power is suspended when there is no person or persons in being by whom an absolute fee in possession can be conveyed.

2. Deceased conveyed certain real estate to H. as trustee by a conveyance in form a warranty deed. By a separate instrument, which was part of the same transaction, H. declared a trust by which it was agreed that he should manage the property, pay to deceased during her life the net income, and that, if she should die before the expiration of the trust, the income should be divided in equal proportions among certain persons designated, and at the expiration of the trust the trustee should convey to such persons, or the survivors of them, the premises described in equal shares, but that the interest of any thereof who should die before the expiration of the trust should expire and pass to the survivors of the persons named, and not to their heirs or assigns. The trust further declared that it should continue until decedent's death, but that, if she should die before the expiration of 14 years, it should continue until the expiration of that period. *Held*, that since, after decedent's death before expiration of the 14 years, there was no person or persons in existence who could convey a fee to the property, the trust was void as a perpetuity.

3. Where real estate was conveyed to a trustee under a trust which was void as a perpetuity, on the death of the grantor the property was subject to disposition as intestate estate.

4. Rev. St. 1878, § 3186, authorizes an action by a person having the legal title and possession of land against any other setting up a claim to the land to quiet the title. *Held* that, where plaintiff could not establish the invalidity of a trust of certain land in which she was interested as an heir of the grantor except by evidence outside the record, she was entitled to sue to invalidate the trust as a cloud on her title, though she was not in actual possession.

Appeal from Circuit Court, Wayne County, in Chancery; George S. Hosmer, Judge.

Action by Annie H. Casgrain and others against Charles F. Hammond and others. From a judgment overruling a demurrer to the complaint, defendants appeal.

Thomas A. E. Weadock, for appellants. Brennan, Donnelly & Van De Mark, for appellees.

MOORE, J. This proceeding was commenced in chancery by filing a bill of complaint, some portions of which read as follows: "That during her lifetime Ellen Hammond, now deceased, of the city of Detroit, Wayne county, Michigan, acquired the title in fee and was the owner" of real estate, which is described in the bill of complaint, "upon which said described lands and premises the said Ellen Hammond caused to be constructed a building costing * * * upwards of seven hundred thousand dollars, * * * and was at the time of the death of said Ellen Hammond and now is of the value of upward of one million of dollars. That on the 20th day of February, A. D. 1898, the said Ellen Hammond died intestate, leaving no last will, and subsequently William J.

¶ 1. See Perpetuities, vol. 39, Cent. Dig. § 50.

Digitized by Google

Hammond and your oratrix Annie H. Casgrain were appointed administrators of the estate, and duly entered upon the performance of their duties as administrators. That the estate of the said Ellen Hammond has never been closed, nor have the administrators filed their final account, or been discharged. That the said Ellen Hammond left as her heirs at law George H. Hammond, Charles F. Hammond, William J. Hammond, Florence P. Hammond, Ethel K. Hammond, Edward P. Hammond, and your oratrix Annie H. Casgrain, all children of the said Ellen Hammond, and your orator George H. Lee, grandchild of the said Ellen Hammond, being the son of Sarah Hammond Lee, who had intermarried with Gilbert W. Lee, and had died prior to the death of Ellen Hammond; and the said heirs at law became entitled in equal proportions of all of the estate of Ellen Hammond, share and share alike. That on or about the 12th day of September, A. D. 1895, the said Ellen Hammond executed to Charles F. Hammond, one of the above-named heirs at law, a warranty deed in form of the lands and premises above described, in which deed the said Charles F. Hammond is described as trustee, and in which said deed the consideration for the conveyance is stated as the sum of one dollar ($1) and other considerations, * * * which deed was recorded in the office of the register of deeds for the county of Wayne on the 1st day of October, 1895; and your orators show that by reason of the recording of said deed as aforesaid in the public records in the office of the register of deeds of Wayne county the title in fee to said lands appears to be in the said Charles F. Hammond. * * * Your orators further allege that they are informed and verily believe, and therefore charge the truth to be, that it was not the intention of the said Ellen Hammond, deceased, to vest the title in fee of the said lands and premises in the said Charles F. Hammond, trustee, and they are informed and believe and charge the truth to be that on the same date, and simultaneously with the execution of the said deed to Charles F. Hammond, trustee, by the said Ellen Hammond, the said Charles F. Hammond executed and delivered an instrument in writing, duly acknowledged and witnessed, so that the same was entitled to be recorded in the office of the register of deeds for the county of Wayne under the strict requirements of the law with reference thereto, which said instrument in writing is denominated a 'declaration of trust,' by the terms of which the said Charles F. Hammond did thereby declare, as grantee and trustee in the deed named aforesaid, that he received and held the title to the same property in trust for the purposes in said declaration of trust named—that is to say, to let, lease, manage, and control the property according to his best judgment so as to yield as large an income as possible, and, after paying and discharging the taxes and repairs thereon and expenses in the care and management, to account and pay over to the said Ellen Hammond, during the term of her natural life, the net income derived therefrom at such times as she might desire for her use and maintenance, and, should the said Ellen Hammond die before the expiration of the period of fourteen years from the execution of the trust, then the said net income was to be divided and paid in equal proportions by the said Charles F. Hammond to William J. Hammond, Florence P. Hammond, Ethel K. Hammond, Edward P. Hammond, and the said Charles F. Hammond, and at the expiration of the term of the trust created thereby he should convey the land and premises in question to William J. Hammond, Florence P. Hammond, Ethel K. Hammond, Edward P. Hammond, and the said Charles F. Hammond, or to the survivor or survivors of them, in equal undivided shares, and that the interest of any one or more of the persons named, to wit, Charles F. Hammond, William J. Hammond, Florence P. Hammond, Ethel K. Hammond, and Edward P. Hammond, who may decease before the expiration of the trust hereby created, shall pass to and be conveyed to the survivor or survivors of the persons above named, and shall not pass to the heirs or assigns of any one of them who may decease; that the trust hereby created should continue until the decease of the said Ellen Hammond, and, should she decease before the expiration of fourteen years from the date thereof—that is to say, on or before the 12th day of September, A. D. 1909—then the said trust shall continue until the expiration of the fourteen years from the date of said instrument, and in that event terminate at the end of fourteen years from the date thereof. * * * That the said declaration of trust has never been recorded, so that the records of the title to the said lands and premises do not disclose the correct nature and extent of the title which the said Charles F. Hammond has in the lands and premises aforesaid, and your orators are informed and believe, and therefore charge the fact to be, that the said declaration of trust is now in the actual possession of the said Charles F. Hammond, trustee. * * * Your orators further show unto the court that the said declaration of trust and the said warranty deed in truth and in fact constitute one instrument, and together show the intent and purpose with which the said Ellen Hammond, deceased, conveyed the title of the lands and premises hereinbefore described to the said Charles F. Hammond, trustee, and she is entitled to have this court so declare; that by the terms thereof the said Ellen Hammond attempted to convey the said lands and premises to the said Charles F. Hammond, trustee, for uses and purposes and upon terms and conditions in violation of law, and especially in violation of the provisions of the statute of this state more specifically described

Digitized by Google

compiler's sections 8796 and 8797 of the Compiled Laws of Michigan for 1897, being sections 14 and 15 of chapter 237 of said Compiled Laws, pertaining to real property and of the nature and quality of the estates in real property and the alienation thereof. * * * That immediately upon the death of the said Ellen Hammond your orators, equally with the other heirs of the said Ellen Hammond, each inherited and became by right the owners in fee of an undivided interest in the said lands and premises by inheritance—that is to say, each an undivided one-eighth thereof; and each of the said heirs of the said Ellen Hammond also became the owners in fee of an undivided one-eighth interest thereof by inheritance, and as such became entitled to have and receive from time to time as the same accrued a like proportion of the rents and profits arising therefrom. * * * Your orators further show: That George H. Hammond died intestate in the city of Detroit in the year 1886, leaving a large estate, consisting of real and personal property, which estate was afterwards administered in the probate court for the county of Wayne. That the administration thereof has never been closed, and a large part of the real estate thereof has never been partitioned and distributed. That as one of the distributees of the estate of said George H. Hammond the said Ellen Hammond received on account of her share or interest therein personal property, which, converted into money, amounted to about one million dollars. That the other distributees of said estate and heirs of the said George H. Hammond were George H. Hammond; Annie H. Casgrain, your oratrix; Sarah Hammond Lee, now deceased, and of whom your orator George H. Lee is the sole heir, as hereinbefore referred to; Charles F. Hammond; William J. Hammond; Florence P. Hammond; Ethel K. Hammond, since deceased; and Edward P. Hammond. That after the death of said George H. Hammond the said Ellen Hammond was duly appointed the guardian of the persons and estates of William J. Hammond, Charles F. Hammond, Florence P. Hammond, Ethel K. Hammond, and Edward P. Hammond, who were at the time minors and infants under the age of twenty-one years, and as such guardian the said Ellen Hammond received into her possession and had control of a large amount of money and personal property of each of the said infants, which was inherited by them from George H. Hammond, deceased, and was distributed to them as heirs of his estate. That, as your orator is informed and believes, when the said Ellen Hammond purchased the land and premises hereinbefore described and erected the building thereon the said Charles F. Hammond, William J. Hammond, Florence P. Hammond, Ethel K. Hammond, and Edward P. Hammond were still minors, infants under the age of twenty-one years, and the said Ellen Hammond was still guardian of their persons and estates, and had the control and custody of their property. That the said Charles F. Hammond claims, and your orators are informed and verily believe and charge the truth to be, the said Ellen Hammond, without any authority from the probate court of the county of Wayne, or any other court of competent jurisdiction, and without the authority of law, did borrow and use certain of the moneys belonging to the estates of each of said infants, and used the same, with a large amount of her own money, paying for the property and building aforesaid; that is to say, that she used of the money and property of the said William J. Hammond the sum of fifty thousand dollars, of the said Charles F. Hammond the sum of fifty thousand dollars, of the said Florence P. Hammond the sum of one hundred and twelve thousand dollars, of the said Ethel K. Hammond one hundred and sixteen thousand dollars, and of the said Edward P. Hammond the sum of one hundred and twelve thousand dollars. That your orators have no means of knowing the exact amounts of said infants' estates borrowed by said Ellen Hammond. That in the purchase of said property and erection of said building the said Ellen Hammond used, as your orators are informed and believe, and therefore allege as true, of her own money, the sum of seven hundred and fifty thousand dollars in addition to the sums borrowed from the estates of said infants. That at the time of the death of the said Ellen Hammond the said Florence P. Hammond, Ethel K. Hammond and said Edward P. Hammond were infants and were under the age of twenty-one years, and the said Charles F. Hammond, who had arrived at the age of twenty-one years and upwards, succeeded the said Ellen Hammond as guardian of the persons and estates of the said three last-named infants. That the estates of the said Florence P. Hammond, Ethel K. Hammond, and Edward P. Hammond, infants as aforesaid, have never been closed, nor has the estate of the said Ellen Hammond, deceased, ever been closed, or her accounts as guardian of the respective infants or of their estates ever been filed, settled, and allowed, nor have the accounts of said Charles F. Hammond as guardian ever been filed, settled and allowed. And your orators further allege that the said Charles F. Hammond now pretends and claims that by reason of the premises and the use of the said several sums of money belonging to the said infants by their guardian, the said Ellen Hammond, deceased, in connection with her own moneys, in paying for the property aforesaid, the said Florence P. Hammond and the estate of said Ethel K. Hammond, now deceased, as hereinbefore stated, and the said Edward H. Hammond and the said Charles F. Hammond and William J. Hammond are each entitled to have a lien upon the premises and building aforesaid for the amounts aforesaid, respective-

Digitized by Google

ly. Your orators do not deny that the several sums of money respectively hereinbefore set forth belonging to the estates of the said several infants, and used by the said Ellen Hammond for the purposes aforesaid, should be accounted for by the estate of the said Ellen Hammond, nor do they deny that they are entitled to have the same paid. On the contrary, your orators admit that the said Charles F. Hammond, William J. Hammond, Florence P. Hammond, Ethel K. Hammond, and Edward P. Hammond are entitled to protection to the extent of the amounts of money belonging to their said estates, respectively, out of the estate of the said Ellen Hammond, deceased, generally, or, if this court may so direct, that each of them may have a special or equitable lien upon the premises hereinbefore described as security for the same; and your orators admit that the said defendants are entitled to an accounting as to the same, and that they are entitled to have this court find and determine the amount thereof. That the estate of the said Ellen Hammond is amply sufficient to repay the said infants the sums aforesaid when the same shall be proved according to law. That your orators are informed and believe that the moneys belonging to the estates of the said infants so used by the said Ellen Hammond in the acquisition of the premises and the construction of the building aforesaid are those referred to in the declaration of trust hereinbefore referred to, a copy of which is hereto attached, and which the said infants are required to receipt in full for and to release and discharge the estate of the said Ellen Hammond from, as set forth in the said declaration of trust, before said Charles F. Hammond, the trustee, shall convey to them or any of them, any interest in or share of the said premises. And your orators allege that, notwithstanding the said claims of said Charles F. Hammond as to the use of said moneys of said infants by said Ellen Hammond in part payment of the cost of said property, your orators are entitled to have said trust deed declared unlawful and invalid, and the said Charles F. Hammond is not entitled to have and retain the rents and profits of said premises as he now claims and is doing." The bill prays that the two instruments may be decreed to be invalid, and for an accounting of the rents and profits, with a general prayer for relief.

Florence P. Hammond filed an answer in the nature of a cross-bill, and asks the court to pass upon the validity of the trust settlement, and that there may be an accounting as to the amount due her from the estate of Ellen Hammond for money used in the construction of the building belonging to her. The other defendants demurred to the bill. From an order overruling the demurrer those defendants have appealed.

A sufficient statement of the contents of the deed from Mrs. Hammond to Charles F. Hammond, trustee, dated September 12, 1895, has already appeared. On the same day there was signed and executed by Charles F. Hammond and Ellen Hammond a paper called a "declaration of trust," the material parts of which read as follows:

"Whereas, Ellen Hammond of Detroit, Wayne county, Michigan, as party of the first part, has this day executed and delivered to Charles F. Hammond, as trustee, by conveyance in the form of a warranty deed, the following described premises, to wit, * * * for the consideration of one dollar and other valuable considerations, expressed therein: Now I, the said Charles F. Hammond, grantee and trustee named in the said deed, do hereby declare the nature and purposes of the trust for which conveyance was made to me to be as follows: (1) I am to let, lease, manage and control said property as shall seem best in my judgment, so as to yield as large an income as possible, and, after paying and discharging all taxes assessed against the same, and repairs to the building situate thereon, and expenses of care and management, account for and pay to the said Ellen Hammond for and during the term of her natural life the net income derived therefrom at such times as she may desire for her use and maintenance. (2) Should the said Ellen Hammond decease before the expiration of the trust created hereby, then the net income aforesaid is to be divided and paid in equal proportions by second party to Charles F. Hammond, William J. Hammond, Florence P. Hammond, Ethel K. Hammond, and Edward P. Hammond or the survivor of them, until such expiration. (3) At the expiration of the trust created hereby, I (Charles F. Hammond) am to convey by proper conveyance to the said Charles F. Hammond, William J. Hammond, Florence P. Hammond, Ethel K. Hammond, and Edward P. Hammond, or the survivor or survivors of them, the premises above described in equal undivided shares. The interest of any or more of the persons named, to wit, Charles F. Hammond, William J. Hammond, Florence P. Hammond, Ethel K. Hammond, and Edward P. Hammond, who may decease before the expiration of the trust created hereby shall expire, shall pass to and be conveyed to the survivor or survivors of the persons above named, and shall not pass to the heirs or assigns of any one of them who may decease. (4) The trust created hereby by said conveyance shall continue until the decease of the said Ellen Hammond, and, should she decease before the expiration of fourteen years from the date hereof, then the said trust shall continue until the expiration of the fourteen years from this date, and in that event terminate at the end of fourteen years from the date hereof. Should the said Ellen Hammond survive the period of fourteen years from this date, the trust created hereby shall terminate at her decease. The conveyance

Digitized by Google

so made is to satisfy and cancel any and all claims that either said Charles F. Hammond, William J. Hammond, Florence P. Hammond, Ethel K. Hammond, and Edward P. Hammond may have against said Ellen Hammond for moneys received by her as guardian to the extent that she has invested such funds in the property above described for them severally or their estates, and before they or any of them shall receive the conveyance of the interest provided hereby to be conveyed to them at the expiration of the trust hereby created they shall each execute and deliver to said Ellen Hammond's legal representative proper releases and discharges of any and all such claims against her and her estate."

On the part of Charles F. Hammond it is said he may take either of three positions: "First. He may insist that the deed conveys the property to him absolutely, for a sufficient consideration, and neither the complainants nor any other heir of Ellen Hammond would have any claim upon it; or, second, that if the trust agreement, so called, is a part of the original conveyance, and the two instruments are to be treated as one, and the trust limitations should fail, that, in that event, the legal title vests at once in the cestuis que trustent, free from any limitation; or, third, that the conveyance and trust agreement, considered together, make but one instrument, and the trust is legal, and binding upon all the world."

On the part of the complainant it is insisted the trust sought to be established must fail, as in conflict with the following provisions of the statute:

"Comp. Laws, § 8796 (14). Every future estate shall be void in its creation, which shall suspend the absolute power of alienation for a longer period than is prescribed in this chapter; such power of alienation is suspended when there are no persons in being, by whom an absolute fee in possession can be conveyed."

"Comp. Laws, § 8797 (15). The absolute power of alienation shall not be suspended by any limitation or condition whatever, for a longer period than during the continuance of two lives in being at the creation of the estate, except in the single case mentioned in the next section."

It is also claimed the following sections bear upon the controversy:

"Comp. Laws, § 8844. Every express trust, valid as such in its creation, except as herein otherwise provided, shall vest the whole estate in the trustees, in law and in equity, subject only to the execution of the trust; and the person for whose benefit the trust was created, shall take no estate or interest in the lands, but may enforce the performance of the trust in equity."

Comp. Laws, § 8795, is as follows: "Future estates are either vested or contingent; they are vested when there is a person in being who would have an immediate right to the possession of the lands upon the ceasing of the intermediate or precedent estate; they are contingent whilst the person to whom or the event upon which they are limited to take effect remains uncertain."

New York has had a statute similar to sections 8796, 8797, Comp. Laws, which has been construed a good many times. The effect of these decisions is that a suspension of the power of alienation not based on lives is void, and that the power of alienation is suspended when there are no persons in being by whom an absolute fee in possession can be conveyed. See Moore v. Moore, 47 Barb. 260; Garvey v. McDevitt, 72 N. Y. 556; Rice v. Barrett, 102 N. Y. 161, 6 N. E. 898; Cruikshank v. Home for Friendless, 113 N. Y. 337, 21 N. E. 64, 4 L. R. A. 140; Haynes v. Sherman, 117 N. Y. 433, 22 N. E. 938; People v. Simonson, 126 N. Y. 299, 27 N. E. 380; Booth v. Baptist Church, 126 N. Y. 215, 28 N. E. 238; Trowbridge v. Metcalf, 39 N. Y. Supp. 243. Our own statute has been construed by this court in Trufant v. Nunneley, 106 Mich. 554, 64 N. W. 469, in which it was held that, if effect was given to certain provisions in the will, there would be a time during which there would be no person or persons in whom the estate vested in fee simple absolute, hence no person in being who could convey, and that this will in that regard was void, and, as to the property affected by the void will, it must be distributed under the statute. In State v. Holmes, 115 Mich. 456, 73 N. W. 548, Justice Grant, speaking for the court, said: "The law of this state in regard to estates in possession and in expectancy is found in 2 How. Ann. St. § 5523 et seq. The provisions controlling this case are sections 5530 and 5531, which read as follows: 'Every future estate shall be void in its creation which shall suspend the absolute power of alienation for a longer period than is prescribed in this chapter. Such power of alienation is suspended when there are no persons in being by whom an absolute fee in possession can be conveyed. The absolute power of alienation shall not be suspended by any limitation or condition whatever for a longer period than during the continuance of two lives in being at the creation of the estate, except in the single case mentioned in the next section.' This statute was adopted in the state of New York in 1830. It was subsequently adopted in this state verbatim et literatim, and is found in the Revised Statutes of 1846. The construction placed upon this statute by the courts of that state has a controlling influence, and courts will presume that the Legislature recognized and accepted such construction. Greiner v. Klein, 28 Mich. 12. The Court of Appeals of New York has passed upon this statute several times before its adoption here. Coster v. Lorillard, 14 Wend. 265, 312; Hawley v. James, 16 Wend. 61; Hone v. Van Schaick, 7 Paige, 231;

Digitized by Google

Irving v. DeKay, 9 Paige, 529. It has been before that court many times since. Yates v. Yates, 9 Barb. 324, 347; Tayloe v. Gould, 10 Barb. 398; Tucker v. Tucker, 5 N. Y. 417; Rose v. Rose, 4 Abb. Dec. 108; Moore v. Moore, 47 Barb. 260; Garvey v. McDevitt, 72 N. Y. 556; Rice v. Barrett, 102 N. Y. 161, 6 N. E. 898; Cruikshank v. Home for Friendless, 113 N. Y. 337, 21 N. E. 64, 4 L. R. A. 140; Haynes v. Sherman, 117 N. Y. 433, 22 N. E. 938; People v. Simonson, 126 N. Y. 299, 27 N. E. 380; Booth v. Baptist Church, 126 N. Y. 215, 28 N. E. 238; Trowbridge v. Metcalf (Sup.) 39 N. Y. Supp. 243." The rule established by these authorities is that a suspension of the power of alienation, not based on lives, is void, and that the power of alienation is suspended when there are no persons in being by whom an absolute fee in possession can be conveyed. It is said in Moore v. Moore: "In all the adjudicated cases upon this statute the courts have uniformly held that the period of suspension of alienation could not be measured by time alone; that life must, in some form, be the measure of the period of suspension." In that case suspension was for three years. In Rose v. Rose it was for five years. Tested by this rule, the devise must fail. There are no persons in being who can convey an absolute fee in this land. If all the parties mentioned should now unite in a conveyance, the grantee would take only a life estate. The widow has only that interest to convey. The state has nothing to convey, for it has no interest until the conditions are accepted. The grandson has nothing to convey, and cannot have until the state refuses or neglects to accept the condition. The title to the land is left "swinging in abeyance," without protection, owner, or abiding place. A squatter might take possession, and no one could eject him. It is not exempt from taxation, because the state does not own it. It cannot be assessed to the grandson after the death of the widow, because he does not own it. This condition of things may exist for five years. It therefore violates the statute, and is void.

Inasmuch as the defendants have demurred to the bill of complaint, which avers the recorded deed and the declaration of trust constitute but one transaction, for the purposes of this controversy it must be so considered. The important question, then, is whether the effect of the two papers is to suspend the power of alienation for a period of time not based on lives? It is insisted by the defendants that there were always persons in being in whom the title vested, and who could have joined in a deed and conveyed the fee, and that the answer to the question should be no. Counsel cite Caspari v. Cutcheon, 110 Mich. 89, 67 N. W. 1093, Toms v. Williams, 41 Mich. 552, and Torpy v. Betts, 123 Mich. 243, 81 N. W. 1094. In the Caspari Case it was conceded by counsel that they did not regard the trust void because of the statute against perpetuities, and that question was not in the case. In the Jones Case it was held that the application of rules against perpetuities depends on whether the interest devised is vested or not. What was said in that case is not controlling in this one. A reference to Torpy v. Betts will also show it is not controlling in this case. Can the trustee and the cestuis qui trustent join in a deed, and thereby give a good title? Now that Mrs. Hammond is dead, the trustee is not authorized by the declaration of trust to convey to anybody until 14 years from the date of the declaration of trust, and it is his duty to retain control of the property during all of that time. At the expiration of the 14 years it is made his duty to make a conveyance, not to all the cestuis qui trustent named in the declaration of trust and their heirs and assigns, but it is expressly provided that, should any of them die during the 14 years, no title shall pass to their heirs and assigns of the deceased one. The conveyance to be made by the trustee is to be made to such of the cestuis qui trustent as are living at the end of the 14 years. Suppose one of them should to-day make a deed of his interest in the premises, and should die before the expiration of the 14 years, what title would his grantee get? Clearly nothing, for no title would ever come to the grantor. What is true of one is true of each of the others. Whether any of them will ever have any title to the property will depend upon whether they live until the expiration of the 14 years. It would seem to be very clear that by the terms of the trust no one is authorized to convey a title in fee until the 14 years has expired. This, we think, brings it clearly within the provisions of the statute.

The trust, then, having failed, it would be contrary to the purpose of Mrs. Hammond to allow the warranty deed to stand. It is clear she had no intention of conveying the title in fee to this large amount of property to Charles F. Hammond for his sole benefit. It is equally clear she did not intend to vest the title in fee presently in the persons named in the declaration of trust. We think it follows that both deeds fail, and the estate attempted to be conveyed thereby must be regarded as belonging to the estate of Ellen Hammond, and be distributed under the statute. Trufant v. Nunneley, 106 Mich. 554, 64 N. W. 469; Wheelock v. American Tract Society, 109 Mich. 141, 66 N. W. 955, 63 Am. St. Rep. 578; St. Amour v. Rivaud et al., 2 Mich. 293; Coster et al. v. Lorillard et al., 14 Wend. 34; Ahern v. Ahern et al. (Sup.) 65 N. Y. Supp. 81. In Tregonwell v. Sydenham et al., 3 Dow, 194, it is said: "Wherever land, or any interest in land, which would descend to the heir at law, is devised for purposes which the law will not permit to take effect, the heir at law shall have the benefit of the interest so

devised as undisposed of, whether the testator intended that he should have it or not; for there is this distinction between the case of a devisee and that of an heir at law: that the devisee takes by force of the intent of the testator, and can only take what is given him by the will; whereas the heir at law takes whatever is undisposed of, not by force of the intent, but by the rule of law." See Andrews v. Lincoln et al., 95 Me. 541, 50 Atl. 898; Gray on Perp. § 413; Bigelow on Equity, 17; Jenkins v. University, 17 Wash. 160, 49 Pac. 247, 50 Pac. 785; Greene v. Dennis, 6 Conn. 292, 16 Am. Dec. 58; Van Kleeck v. Reformed Dutch Church, 6 Paige, 600; Post v. Hover, 33 N. Y. 593; Lafarge v. Brown (Sup.) 52 N. Y. Supp. 93; Lawrence v. Smith, 163 Ill. 149, 45 N. E. 259; Thomas v. Gregg, 76 Md. 169; Tilden v. Green, 130 N. Y. 29, 28 N. E. 880, 14 L. R. A. 33, 27 Am. St. Rep. 487.

The remaining question calling for consideration is, will chancery take jurisdiction of this case? In Davenport v. Stephens, 95 Wis. 456, 70 N. W. 661, it was said: "Some question was raised whether the plaintiff has shown such possession as should entitle her to maintain this action. It is entirely immaterial whether she was in actual possession or not. No other person was in the actual possession. One who has the legal title to land, whether in possession or not, may maintain an action in equity to remove a cloud of title upon his land, where the invalidity of the hostile claim cannot be shown by any record, but must be proved by evidence aliunde. Pier v. Fond du Lac, 38 Wis. 470; Goodell v. Blumer, 41 Wis. 436; Herren v. Strong, 62 Wis. 223 [22 N. W. 408]. In this case the invalidity of the defendant's claim could be shown only by evidence dehors the record. Section 3186, Rev. St. [1878], extends, rather than limits, the jurisdiction of the courts in the cases to which it is applicable. Fox v. Williams, 92 Wis. 320 [66 N. W. 357]." See Bank v. White, 6 Barb., at page 605; Beedle v. Mead, 81 Mo. 297; Comp. Laws, § 448; Rowland v. Doty et al., Har. Ch. (Mich.) 3; Ormsby v. Barr, 22 Mich. 80; King v. Carpenter, 37 Mich. 363; Eaton v. Trowbridge, 38 Mich. 454; Allen v. Waldo, 47 Mich. 516, 11 N. W. 366; Cleland et al. v. Casgrain et al., 92 Mich. 139, 52 N. W. 460.

The decree of the court below is affirmed. Defendants will be allowed 30 days in which to answer. The other Justices concurred.

TROMBLEY et ux. v. CANNON.

(Supreme Court of Michigan. Sept. 22, 1903.)

MORTGAGES—AGREEMENT TO DISCHARGE—EXCHANGE OF LAND—NEW MORTGAGE—TENDER.

1. Complainants made an exchange of lands with C., whose land exchanged was subject to a mortgage held by defendant, who agreed to release the mortgage on the exchanged land, and accept a new mortgage on the land conveyed to C. *Held*, that defendant was not bound to release his mortgage until a mortgage on the other land had been tendered to him, and without such tender no action could be maintained to compel a discharge of the existing mortgage.

Appeal from Circuit Court, Lenawee County, in Chancery; Guy M. Chester, Judge.

Action by Joseph Trombley and wife against James Cannon to compel the release of a mortgage. From a judgment in favor of complainants, defendant appeals. Reversed.

Complainants, husband and wife, made an exchange of lands by deed with one Sarah J. Chase. Mrs. Chase conveyed to complainants, as tenants by the entirety, by warranty deed. Prior to the exchange, Mrs. Chase had given a small mortgage to defendant. The bill alleges that Mr. Cannon, for and in consideration of five dollars paid to him by Mrs. Chase, agreed with the parties to discharge the mortgage upon the lands conveyed by Mrs. Chase, and to accept in lieu thereof a mortgage from Mrs. Chase upon the lands conveyed to her; that the deeds were exchanged upon this understanding and agreement with defendant; and that defendant Cannon afterwards refused to discharge the mortgage upon complainants' lands. The purpose of the bill is to obtain a discharge of said mortgage. Proofs were taken in open court, and decree entered that the lands of complainants be relieved from the lien of said mortgage.

John O. Zabel, Willis Baldwin, and William M. Long, for appellant. Watts, Smith & Baldwin, for appellees.

GRANT, J. (after stating the facts). It is conceded that defendant agreed to discharge the mortgage on the land to be conveyed to complainants, and to accept in lieu thereof a mortgage on the other land. He did not, however, agree to discharge the one until he had received the other. The complainants and Mrs. Chase exchanged deeds, without the tender to defendant of a mortgage executed by Mrs. Chase. Until this was done, no obligation rested upon defendant to discharge the other mortgage. He was then, and always has been, ready to carry out the agreement. All the parties agreed to meet at a certain time and place to execute the papers. Defendant went, but complainants and Mrs. Chase were not there. Defendant instructed the scrivener, upon whom the parties had agreed to draw the papers, to see that the new mortgage was executed. Complainants and Mrs. Chase afterwards came, and the deeds were executed, but the mortgage was not. The scrivener was not the general agent of defendant, and had no authority to waive the execution of the mortgage by Mrs. Chase. Defendant has not been guilty of laches in not proceeding to secure a mortgage from her. He was under no obligation to do so.

Digitized by Google

Decree reversed, and bill dismissed, with the costs of both courts. The other Justices concurred.

WILLIAM DEERING & CO. v. WALTER et al.

(Supreme Court of Nebraska. Jan. 8, 1902.)

NOTE—CONSIDERATION—TRIAL—SUBMISSION WITHOUT ARGUMENT—HARMLESS ERROR.

1. If a note which is given in settlement of a past due indebtedness, and which extends the time of payment, contains a stipulation releasing and discharging all claims for damages arising out of the transaction in which the indebtedness was incurred, the stipulation rests upon a sufficient consideration, and will be upheld.

On Rehearing.

2. Ordinarily, when a cause is submitted without oral argument, and upon the brief of the plaintiff in error alone, the statements of the brief as to the contents of the record will be treated as true and accurate.

3. A party cannot be heard to complain of error in an instruction from which he suffered no prejudice.

4. Conclusions of fact drawn by a jury from conflicting evidence will not be disturbed.

Commissioners' Opinion. Department No. 3. Error to District Court, Butler County; Sedgwick, Judge.

"Not to be officially reported."

Action by William Deering & Co. against H. P. Walter and others. Judgment for defendants, and plaintiff brings error. Affirmed.

O. C. Davis and Robt. Ryan, for plaintiff in error. Hastings & Hall and Steel Bros., for defendants in error.

AMES, C. This cause was submitted without oral argument upon the brief of the plaintiff in error alone. For the purposes of this opinion the state of the record is taken to be such as it is represented to be by the brief. It is a fair presumption that if there was any important misrepresentation of fact in the brief the defendants in error would have taken pains to point it out. In 1891 the defendants purchased of the plaintiff at Rising City, Neb., a Deering harvester and binder, giving in payment therefor their three certain promissory notes, dated August 3, 1891, as follows, viz.: One for $35, due January 1, 1894. The first and second maturing notes were paid shortly after maturity thereof. On or about January 1, 1894, the time of payment of the third note above referred to was extended by the following instrument:

"61.60. January 1st, 1894.

"On or before the 1st day of Apr., 1894, for value received, I, the undersigned, as principal, of Reading Township, County of Butler, and State of Nebraska, promise to pay to William Deering & Co. (an incorporated company under the laws of the State of Illinois) or order, Sixty-One and 60-100 Dollars, payable at the Rising City Bank, in Rising City, Nebraska, with interest at the rate of 10 per cent. per annum, payable annually, from the date hereof until paid. And in consideration of the renewal and extension of my notes, Nos. 128,042, heretofore held by said Company, I hereby acknowledge full satisfaction of and unconditionally release and relinquish all claim or claims against the said William Deering & Co., arising out of the purchase from said Company of the certain machine for which the note (or notes), of which this is a renewal, was given.

"H. P. Walter.
"J. L. Walter."

The action is upon this note. It is alleged in the answer, and evidence was admitted on the trial, that at the time of the sale of the machine, in 1891, the plaintiff had given a written warranty of it, in certain particulars, of which warranty there had been a breach resulting in damages to the defendant. It is also alleged that at the time of the giving of the note in suit the plaintiff agreed orally to put the machine in repair so that it would do good work in the season of 1894, but had neglected and refused so to do. There was no competent evidence of the alleged parol agreement, because it is not shown that one Harrison, who was a mere collector for the plaintiff, and who is claimed to have made it for and on behalf of the plaintiff, as its agent, had any authority for so doing. Under this state of the pleadings and evidence, any inquiry concerning the alleged warranty, and a breach of it and resulting damages, was clearly immaterial and irrelevant. The note sued upon is not alleged to have been obtained by any unfair means, and it expressly, and in the clearest language, and upon a sufficient consideration, to wit, an extension of time for the payment of a part of the indebtedness, waives and releases all claims for damages arising out of the purchase of the machine. Due and seasonable exceptions to these errors were taken by the plaintiff, both during the progress of the trial and by requests for instructions, and, the trial having resulted in a verdict and judgment for the defendants, the plaintiff brings the case here by proceedings in error for a reversal, which is clearly its right.

It is recommended that the judgment of the district court be reversed and a new trial granted.

ALBERT and DUFFIE, CC., concur.

Reversed and remanded.

On Rehearing.

(July 1, 1902.)

AMES, C. This action was submitted without brief or oral argument on behalf of the defendant in error, and decided by an opinion filed on the 8th day of January of this year. Afterwards a motion for a rehearing was granted, and the case has been again submit-

Digitized by Google

ted upon briefs by both parties. The negligence of counsel for the defendants in error at the former hearing is without valid excuse, and to it is due whatever of oversight was committed by the court. It is not an unreasonable rule that statements by reputable counsel in printed briefs, as to the issues and facts disclosed by the records in a case before the court, will be taken as accurate unless they are challenged by their adversaries. This proposition derives especial force from the fact that attorneys are advocates, and, however honorable and upright, are by the very nature of their occupation inclined to a biased and prejudiced view in favor of their clients of matters which they are engaged in litigating; so that opposing counsel, who are not lightly to be accused of negligence, must be supposed to have carefully examined such statements, and to have corrected whatever in them they have found to be amiss. This is the especial service which attorneys are hired to do. The recital of facts contained in the former opinion need to be supplemented and corrected by saying that, as it now appears, the fact of the making of the alleged oral agreement by the agent Harrison, and the question of his authority to make it, instead of being, as we formerly supposed, unsupported by competent evidence, were the subject of sharp conflict in the testimony presented upon the trial, and, the issue thereon having been fairly submitted to the jury, their verdict thereon in favor of the defendant in error is obligatory upon this court. This agreement, which is alleged and also found by the jury to have been the principal, if not the only, consideration for which the note was given, was to the effect that the plaintiff should put the harvester in such condition and repair as that it should do good work during the season of 1894, and that if it should fail so to do the note should not be payable. The making of that agreement was an admission that the machine was then out of repair. The note itself acknowledged that the maker had some claim or claims against the payee, growing out of the purchase of the machine, which was expressly released, relinquished, and satisfied in consideration of the extension of the time of payment effected by the transaction. Such being the case, we do not think it material to inquire what those claims were, or how they arose, or whether the inefficient condition of the machine calling for repairs constituted a breach of a previous warranty. All these matters were set at rest by the note itself, together with the parol agreement. The remaining question in the case is whether the agreement to make repairs was performed by the plaintiff. This, too, was an inquiry of fact submitted to the jury upon conflicting evidence, and conclusively answered by their verdict. The plaintiff in error complains that certain instructions given to the jury were erroneous in incorrectly stating the measure of damages upon a breach of warranty. If so, the error was without prejudice to the plaintiff. If the jury found the parol agreement was made as alleged, no question of damages could properly arise in an action upon the note under the issue as joined. The agreement and its breach merely canceled the note and defeated a recovery. The defendant could not in that action recover or recoup damages for breach of a prior, superseded, canceled, and satisfied contract, and the plaintiff could rightfully have recovered nothing more or less than the face of his note and interest. This view of the matter was evidently taken by the jury.

It is recommended that the former decision of this court be vacated and set aside, and the judgment of the district court affirmed.

ALBERT and DUFFIE, CC., concur.

Former judgment vacated. Judgment of district court affirmed.

KINGSLEY v. SVOBODA et al.

(Supreme Court of Nebraska. Dec. 18, 1901.)

MORTGAGE SALE—VALIDITY.

1. Objections urged against a confirmation of a sale examined, and *held* insufficient.

Commissioners' Opinion. Department No. 3. Appeal from District Court, Howard County; Kendall, Judge.

"Not to be officially reported."

Action by Angeline H. Kingsley against John Svoboda and others. Judgment for plaintiff. Defendants appeal. Affirmed.

Tibbets Bros. and Morey & Anderson, for appellants. Bell & Robinson, for appellee.

DUFFIE, C. This appeal, being from an order confirming a sale, presents no question fatal to the order made, which can be determined in the absence of a bill of exceptions. We have in the record only the order of sale, the appraisal, the notice of sale, the certificates of the county clerk, county treasurer, and clerk of the district court relating to liens, the order of confirmation, and the objection to confirmation. What evidence the court acted on in confirming the sale outside of what the record disclosed is not known. It is said that the certificates relating to liens were not "filed," meaning, as we understand from appellant's brief, that the clerk failed to place any filing mark on them. These certificates appear in the record, and the presumption must obtain, in the absence of a contrary showing, that the district court had evidence before it showing the sale to have been regularly made. The return of the sheriff shows that the sale was made to McKinley-Lanning Loan & Trust Company for $700. The presumption is that the money was paid, and there is nothing before us to rebut the presumption.

We discover no reversible error in the rec-

Digitized by Google

ord, and recommend that the order appealed from be affirmed.

ALBERT and AMES, CC., concur.

Affirmed.

POPE v. KINGMAN & CO.

(Supreme Court of Nebraska. Dec. 18, 1901.)

GARNISHEE—PREPAYMENT OF FEES—WAIVER—PROCEDURE—FRAUDULENT CONVEYANCE—INSTRUCTIONS.

1. A garnishee who appears and answers without objection waives his right to prepayment of his fees.
2. Issuance of execution against the attachment debtor, and return thereof unsatisfied, are not required before proceeding against a garnishee under section 225, Code Civ. Proc., for unsatisfactory answer.
3. A transfer made to a third person for the sole purpose of preferring and satisfying a bona fide creditor is not voidable as hindering or delaying other creditors. But such transfer must be made in good faith for that purpose, and an instruction which omits this element of the rule is properly refused.
4. The rule that where a bona fide creditor takes property of the debtor in satisfaction of his claim the transaction is not voidable by reason of fraudulent intent of the debtor unless the creditor participated in such intent, does not apply to a purchaser, not himself a creditor, who, by direction of the debtor, pays the purchase price to a preferred creditor.
5. Alleged errors in the introduction of evidence are not reviewable unless excepted to in the trial court.
6. The verdict *held* to be sustained by the evidence, and in accord with the instructions of the court.

Commissioners' Opinion. Department No. 2. Error to District Court, Gage County; Letton, Judge.

"Not to be officially reported."

Action by Kingman & Co. against Isham B. Pope. Judgment for plaintiff. Defendant brings error. Affirmed.

Hazlett & Jack, for plaintiff in error. J. H. McIntosh, for defendant in error.

POUND, C. Kingman & Co. sued Pope under section 225, Code Civ. Proc., alleging an unsatisfactory disclosure as garnishee in an action brought by Kingman & Co. against one Hiatt. The substantial issue involved was as to the validity of a transfer of a stock of goods from Hiatt to Pope, which was claimed to be fraudulent and void as to Hiatt's creditors. The verdict of the jury was for plaintiffs, and the cause comes here on error from the judgment pursuant thereto.

It is urged that the action is not maintainable, because Pope was neither paid nor tendered the fees to which he was entitled as garnishee, and also because no execution was issued and returned unsatisfied prior to its commencement. With respect to the first contention, it is enough to say that the garnishee appeared and answered without objection, and by so doing waived his right to prepayment of fees. Hinkley v. St. Anthony Falls Water Power Co., 9 Minn. 55 (Gil. 44). Nor is the other point well taken. This was a case of garnishment before judgment. Section 225, Code Civ. Proc., under which the action was brought, does not require issuance of execution, and return thereof unsatisfied, prior to suit; and such a requirement, if read into the statute, would be in conflict with the provision of section 228 that the amount recovered from the garnishee shall be first applied upon the judgment, and the execution shall issue for the residue. We are satisfied that the action is maintainable without such preliminary proceeding. It is also argued that the petition does not state a cause of action, in that it fails to show sufficiently that the judgment against Hiatt is unpaid. Bearing in mind that the petition is thus attacked for the first time after verdict, the allegation that plaintiff is "unable to collect its said judgment" would seem to be enough.

With one exception, we think all of the instructions requested by Pope and refused by the trial court relate to matters amply covered in the charge of the court on its own motion. The one instruction tendered of which this may not be said refers to the right of an insolvent debtor to prefer creditors. It was claimed that Hiatt made the transfer to Pope for the purpose of preferring his wife and daughter, to whom he testified he was largely indebted, and that the consideration went to them by Hiatt's direction. We do not doubt that, if a debtor sells his property with the sole and bona fide purpose of raising money to pay creditors, and does apply the money, and all of it, to payment of creditors in good faith, the transfer is valid. Preferring a creditor in good faith is a legal right of the debtor, and he may do so quite as much by selling his goods and paying over the proceeds as by turning over the goods themselves. If he sold for that purpose only, he had no fraudulent intent, and the sale was valid. Hence, although the court made it clear that the sale was valid unless made with the intent and purpose of defrauding creditors, we think an instruction as to the right of a debtor to prefer creditors would have been very proper, and that it should have been given had one been tendered which correctly stated the law. But the instruction requested, refusal of which is assigned as error, is obviously defective and improper in omitting the important qualification that the preference must be made in good faith. If the debtor intends not only to prefer one creditor, but to hinder, delay, and defraud the others, the transfer is invalid. Ellis v. Musselman (Neb.) 85 N. W. 75; Tackaberry v. Gilmore, 57 Neb. 450, 452, 78 N. W. 32; Landauer v. Mack, 43 Neb. 431, 436, 61 N. W. 597. Though preference of itself does not amount to, nor give rise to, an inference of such intent, neither does it necessarily exclude it. The instruction was properly refused.

Digitized by Google

In the course of an instruction which clearly and fully states what the plaintiffs were required to prove, the court told the jury that, if notice of the fraudulent intent of Hiatt, if any he had, was brought home to Pope before he passed the consideration, the sale was voidable. Two objections are made to this part of the instruction: First, it is said that, as the purpose of the sale was to prefer Hiatt's wife and daughter, who were creditors, the vendee would not be liable merely because of notice of any fraudulent intent Hiatt may have had, nor unless he participated therein. If the wife and daughter had taken the property in satisfaction of bona fide claims, even if there had been a fraudulent intent, and they had known of it, yet, taking under a species of compulsion to secure or satisfy their just claims, they could have held the property without regard to notice, unless they participated in some way in the fraudulent purpose. Jones v. Loree, 37 Neb. 816, 56 N. W. 390; Sunday Creek Coal Co. v. Burnham, 52 Neb. 364, 72 N. W. 487. But Pope was a mere volunteer. He was under no species of compulsion to buy the stock, and, if there was a fraudulent intent, and he knew it, cannot avail himself of the fact that those who received the consideration may not be compelled to restore it. That he paid the purchase price to preferred creditors by direction of the debtor does not put him in the place of such creditors. The rule that protects a creditor who takes in satisfaction of a bona fide indebtedness is expressly put on the ground that any other doctrine would prevent him from protecting himself and from exercising his legal right of demanding and receiving the money due him. So long as he only exercises this right, and does not participate in any fraudulent intention which the debtor may have, it may well be said that he is not within the purview of a statute meant to protect creditors, not to defeat them. But ordinary purchasers, even though they pay a full consideration, are within the express words of the statute where they have knowledge of the fraudulent intent of the vendor. Section 21, c. 32, Comp. St. 1901. Moreover, the reason of the rule as to creditors does not apply to them. The statute contains but one exception, namely, the case of a purchaser for value without notice, and there seems no ground for establishing further exceptions by supplementary judicial legislation. The rule applicable in this case is stated in Brown v. Sloan (Neb.) 85 N. W. 37. Next it is urged that the evidence affords no ground for such an instruction. There is evidence that the transfer of an equity in lands in another state, which was the consideration, was not completed for some time after the stock of goods was turned over. It is true Pope claimed that he made the transfer for his wife, and turned the stock over to her at once by "indorsement of the bill of sale." But plaintiffs contended that this was part of a fraudulent scheme, and had a right to have the general rule of law as to notice stated to the jury. The instruction is a full and correct statement of what was required to be shown before recovery could be had, and we see no valid objection to it.

Errors are assigned with respect to the admission of certain notes in evidence. But the record does not show any exceptions to these rulings, and we cannot review them. It is also argued that the verdict is contrary to the evidence and to the court's instructions. Questions of fraudulent intent are peculiarly within the province of a jury. Connelly v. Edgerton, 22 Neb. 84, 34 N. W. 76. The transactions here in controversy were largely between near relatives, and called for close scrutiny. There was ample evidence to go to the jury, and we should not be justified in disturbing their conclusion even if we were inclined to take a different view. But we think the verdict is sustained by the evidence and in accord with the instructions.

It is recommended that the judgment be affirmed.

OLDHAM and SEDGWICK, CC., concur.

Affirmed.

MARSH et al. v. STATE ex rel. NORTH et al.

(Supreme Court of Nebraska. Jan. 8, 1902.)

ERROR—REVIEW—NEW TRIAL—PLEADING—MANDAMUS—WHEN LIES.

1. This court will not review the proceedings of the district court by petition in error unless a motion for a new trial was made in the trial court, and a ruling obtained thereon. Jones v. Hayes, 36 Neb. 526, 54 N. W. 858, followed.

2. When a petition is not assailed until after judgment, it will be liberally construed so as to be sustained, if possible.

3. Mandamus will lie to control the action of the state printing board in awarding contracts for state printing to the lowest and best bidder.

Commissioners' Opinion. Department No. 2. Error to District Court, Lancaster County; Cornish, Judge.

"Not to be officially reported."

Application by the state, on the relation of Hannah North and others, for a writ of mandamus to George W. Marsh and others. Judgment for relators, and defendants bring error. Affirmed.

F. N. Prout and Lambertson & Hall, for plaintiffs in error. Wilson & Brown, for defendants in error.

OLDHAM, C. On the 23d day of February, 1901, the relators Jacob North & Co. filed in the district court of Lancaster county, Neb., an application in the form of a motion and affidavit for a writ of mandamus commanding the respondents, who constitute the state printing board, to award to the relators the contract for printing 1,000 copies each of volumes 63 and 65 of the Supreme

¶ 3. See Mandamus, vol. 33, Cent. Dig. § 181.

Digitized by Google

Court Reports of the state of Nebraska, for the sum of 98 cents per page for each of said volumes. The reason assigned for said writ in the motion and affidavit of the relators is that Jacob North & Co. were the lowest and best bidders on said volumes 63 and 65. An answer was filed on the part of the respondents in which it was alleged, in substance, that the relators Jacob North & Co. did not bid in accordance with the requirements of law or in accordance with the requirements of the advertisement for said work, and that they were not the lowest and best bidders, but, on the contrary, the State Journal Company were the lowest and best bidders on volumes 61 to 68, inclusive, of the Nebraska Supreme Court Reports. The answer then sets out the bid of the State Journal Company, and the fact that a good and sufficient bond accompanied the bid. On issues thus joined the trial was had in the district court, and the relators were awarded a peremptory writ of mandamus as prayed for in their motion and affidavit.

The record shows that this trial was had at the February term of the district court of Lancaster county on the 4th day of April, 1901. The record also shows that the February term of this court was adjourned without day on the 5th day of April, 1901, and that a motion for a new trial was filed by the respondents on the 6th day of April, 1901, and that this motion has never been disposed of by the trial court. Under this condition of the record it is a very serious question whether, under the rules governing proceedings in this court, we would be permitted to examine any of the allegations in the petition in error which respondents have filed here. In Smith v. Spalding, 34 Neb. 128, 51 N. W. 469, a petition in error was dismissed from any consideration in this court because no ruling had been obtained on a motion for a new trial filed in the court below by the plaintiff in error. Post, J., in disposing of the case, said: "Plaintiff in error should have called the attention of the district court to the rulings he complained of. If such rulings were erroneous, we must presume that the district court would have allowed a new trial. The rule is so well settled in this court as to render the citing of authorities unnecessary." This rule was adhered to in the later case of Jones v. Hayes, 36 Neb. 526, 54 N. W. 858. In this case Norval, J., rendered the opinion.

The record in the case at bar is slightly distinguishable from the records in the cases just cited, in that the motion for a new trial in this case was not filed until after the adjournment of the term of court at which the judgment was rendered, and consequently the trial judge would have no authority to have acted on the motion in any way, except to have either stricken it from the files or to have overruled it. Doolittle v. American National Bank, 58 Neb. 454, 78 N. W. 926; Nelson v. Farmland Security Co., 58 Neb. 604, 79 N. W. 161.

If we should treat this case as one in which no motion for a new trial was filed in the court below, and should apply to it the rule announced in Farris et al., School Board, v. State ex rel. Murphy, 46 Neb. 857, 65 N. W. 890, we could then only examine the sufficiency of the pleadings to sustain the judgment, and the pleadings, not having been assailed until after judgment, would be liberally construed, so as to be sustained if possible. Dodds v. McCormick Harvesting Machine Co. (Neb.) 87 N. W. 911.

The affidavit, which takes the place of a petition in this case, alleges, in substance, that the respondents constitute the state printing board of the state of Nebraska; that they had received estimates from the offices of each department of the state for printing according to law; that these estimates included those of the clerk of the Supreme Court of the state of Nebraska for eight volumes of the Reports of the Supreme Court, including the volumes bid for by the relators. The affidavit sets out the advertising for bids, as provided for by law, and that the relators were the lowest and best bidders for volumes 63 and 65 of said Reports, their bid being 98 cents per page on each of these volumes. It also alleges that, notwithstanding such fact, the respondents failed and refused to award them the contract, and that the respondents awarded the contract for the printing of the said volumes of Supreme Court Reports to the State Journal Company at the rate of $1.15 per page. They also allege that their bid was in accordance with the schedule and specifications furnished by the said respondents, and was accompanied by a sufficient bond, which was approved by the respondents.

It is urged by counsel for the respondents that mandamus will not lie in this case, because relators' affidavit shows that the contract for the printing had already been awarded to the State Journal Company before this action was commenced; but this position is in conflict with the doctrine announced by this court in the case of State ex rel. Woodruff-Dunlap Printing Co. v. Cornell, 52 Neb. 25, 71 N. W. 961. In that case parts of the contract for printing had been let to two other bidders before the application for mandamus was instituted, but notwithstanding this fact, under the law then existing the writ was awarded against the board, commanding it to approve relator's bid and award him the entire contract. This case also established the principle that mandamus will lie to control the action of the state printing board in the awarding of its contracts for state printing to the lowest and best bidder.

The law under which the decision was rendered in the case of State ex rel. Woodruff-Dunlap Printing Co. v. Cornell, supra, was changed in 1897 by the adoption of section 2,

Digitized by Google

c. 68, Comp. St. 1901, which provides "that each article or piece of work shall be bid on separately and the contract awarded in like manner to the lowest and best bidder." It seems to us that, applying a liberal rule of construction to this pleading, it is sufficient to sustain the general finding of the district court awarding the peremptory writ prayed for. We are therefore of the opinion that, in any view we may take of the record presented to us in this cause, the judgment of the lower court should be affirmed, and we so recommend.

POUND and SEDGWICK, CC., concur.

Affirmed.

POUND, C. I concur in the recommendation of my Brother OLDHAM. The position taken by counsel for respondents at the argument was that the allegations of their answer stood admitted, and hence this court was to consider whether the affidavit and answer, taken together, sustain the judgment, which it might do if such were the case without a motion for a new trial. This position is not well taken, in view of section 653, Code Civ. Proc., which provides that the alternative writ or affidavit and the answer shall be the sole pleadings in mandamus. No reply was required. In the absence of a motion for a new trial, we cannot review a judgment awarding a writ of mandamus further than to see that it is sustained by the relator's pleading. The facts set up in respondents' answer may have been admitted, but as the record stands we cannot so take it.

SULLIVAN SAV. INST. v. SHARP et al.

(Supreme Court of Nebraska. Jan. 8, 1902.)

APPEAL—REVIEW—REFUSAL TO RELEASE MORTGAGE.

1. When the evidence is fairly conflicting, or where the case as made by the evidence is such that reasonable minds might fairly differ as to the correct and proper conclusion to be drawn therefrom, a finding of fact made by the trial court will not be disturbed on appeal. Booth v. Kessler et al. (Neb.) 87 N. W. 532, followed.

2. A mortgagee is not liable for a failure or refusal to release a mortgage, when the right of the person demanding such release is a disputed question.

Commissioners' Opinion. Department No. 2. Appeal from District Court, Chase County; Norris, Judge.

"Not to be officially reported."

Action by the Sullivan Saving Institution against Arnold D. Sharp and others. Judgment for defendants, and plaintiff appeals. Modified.

Flansburg & Williams, for appellant. N. K. Griggs, for appellees.

OLDHAM, C. This was a suit for the foreclosure of a real estate mortgage. The petition was in the ordinary form. The answer of the defendant the Chase County Land & Live Stock Company admitted the execution and delivery of the mortgage by its grantors, defendant Sharp and wife, and pleaded payment. The answer also asked for damages on a counterclaim against the plaintiff because of its alleged failure to release the mortgage after the payment and demand made by the answering defendant for such release. There was a finding for the defendant by the court below, and a judgment entered canceling the mortgage of plaintiff, and also a judgment rendered in favor of plaintiff on its counterclaim for $100 damage for the alleged failure and refusal of the plaintiff to release the mortgage on demand of defendant after its payment had been made. From this judgment plaintiff has appealed to this court.

The only question called to our attention in the brief of appellant is the contention that the judgment is not sustained by sufficient evidence. The trial proceeded below largely on a stipulation of facts and a stipulation as to what the evidence would be of the material witnesses for both plaintiff and defendant. By agreement this stipulation was offered in evidence, and admitted by the trial court as the testimony of these witnesses. It appeared without dispute in the testimony that the loan in controversy was made by C. C. Burr, of Lincoln, to the defendant Sharp and wife, and that Burr at that time was acting as the agent of the plaintiff in making loans in Nebraska. It also appears without controversy that all the coupons on the note were paid either by Sharp or the defendant Chase County Land & Live Stock Company to C. C. Burr, and that such coupons so paid were returned to the defendants. It also appears that at or about the time of the maturity of the note the defendant the Chase County Land & Live Stock Company paid the note in full and the last coupon due thereon to C. C. Burr, and that the coupon was returned to the defendant, but the note and mortgage were not. It also appears from the stipulation of the parties without any dispute that Burr was permitted not only to collect coupons for interest due on plaintiff's loans, but he was permitted to collect the principal of said loans, and to reinvest and reloan the money so collected for the plaintiff. The testimony conflicts with reference to Burr's authority to collect money on notes and coupons that had not been delivered to him by the plaintiff. According to the testimony admitted as that of the witness Burr, he had this authority; but according to the testimony admitted as that of the witness Farwell, the president and western manager of the plaintiff, Burr was only permitted to collect and reinvest such money of the plaintiff as was collected from notes and coupons sent to him by plaintiff. It was admitted in the stipulation that after the collection by Burr of the note sued on in this controversy he had a settlement with Far-

Digitized by Google

well for the money he had collected for the Sullivan Savings Institution and had not remitted, and that he executed mortgages on over 30,000 acres of real estate, and also on city property in the city of Lincoln, to secure the payment of over $40,000 of the moneys that he had collected and failed to remit. It is stipulated that Burr will swear that this settlement was made from a schedule which he prepared and submitted to Farwell of all the loans which he had collected for the plaintiff and had not remitted at the time of this settlement, and that this schedule contained the note sued on in this controversy. This schedule is attached to and made a part of the stipulation as to Burr's testimony. It is stipulated, on the contrary, that Farwell would testify that the settlement that he made with Burr was only for loans which had been forwarded by plaintiff to Burr for collection, and did not include the loan in controversy. The other testimony admitted was largely corroborative either of the theory of Burr or of Farwell as to the scope of Burr's agency, and was about evenly balanced in this respect.

We think that in this state of the record we can apply to this case with much propriety the language used by Holcomb, J., in the case of Booth v. Kessler et al. (Neb.) 87 N. W. 533, when he says: "We incline to the view that, as established by the evidence, it is a case where reasonable minds might very properly differ as to the proper conclusions to be drawn therefrom, and, if so, we are not warranted in disturbing the finding, even though we might be of the opinion that a different conclusion than that reached by the trial court might be more proper. The rule is that on appeal and a trial de novo the findings of the district court will not be disturbed unless they cannot be reconciled with any reasonable construction of the testimony. Gadsden v. Phelps, 37 Neb. 590, 56 N. W. 314." We therefore conclude that, so far as the court found generally for the defendants, and directed a cancellation of the mortgage, its judgment should be affirmed, but on the question as to the sufficiency of the evidence to sustain the judgment of the trial court on defendant's counterclaim for damages we are unable to find any testimony in the record which we think sufficient to sustain this judgment. We think the clear weight of authorities sustains the proposition that a mortgagee is not liable for a failure or refusal to release a mortgage when the right of the person demanding such release is a doubtful question. Lane v. Frake, 70 Ill. App. 303; Henson v. Stever, 69 Mo. App. 136; Parkes v. Parker, 57 Mich. 57, 23 N. W. 458.

We therefore recommend that the judgment of the district court rendered on defendant's counterclaim for damages be reversed, and that defendant's counterclaim for damages be dismissed, and that the judgment of the district court finding generally for the defendants and dismissing plaintiff's petition and directing the cancellation of plaintiff's mortgage on the land in controversy be affirmed.

POUND and SEDGWICK, CC., concur.

Affirmed.

ROHER v. FASSLER.

(Supreme Court of Nebraska. Jan. 8, 1902.)

TAX LIEN—FORECLOSURE—SALE.

1. Sales of real estate upon foreclosure of tax liens should be, as far as practicable, the same as upon mortgage foreclosures; and, unless the decree provides otherwise, the tracts or lots must be appraised and sold separately.

Commissioners' Opinion. Department No. 2. Error to District Court, Webster County; Beall, Judge.

"Not to be officially reported."

Action by Chris. Fassler against M. F. Roher. Judgment for plaintiff. Defendant brings error. Reversed.

Wharton & Baird, for plaintiff in error. A. M. Walters, for defendant in error.

SEDGWICK, C. This is a proceeding in error to review an order of the district court of Webster county confirming a sale of real estate on a decree of foreclosure of tax liens. The petition upon which the decree was entered contains more than 40 counts, each stating a cause of action for the foreclosure of tax liens upon the real estate described in each count respectively, so that more than 40 different causes of action were united in the same petition. On the 15th day of January, 1897, trial was had, with a general finding in favor of the plaintiff, and a decree against all of the various tracts of real estate described in the petition (except one lot, which seems to have been excepted from the decree), for the sum of $1,261.22, and attorney fees and costs. The order of sale follows the decree, and directs the sale of the various tracts of real estate, without providing that they shall be sold separately; and the sheriff's return shows that he sold the real estate in a body to the plaintiff, Chris. Fassler, for $1,465.70. Afterwards, on the 9th day of May, 1898, the defendant filed a motion to set aside the sale. Of the grounds urged in this motion, one is too indefinite to be considered; the second is not now insisted upon; and the third, fourth, and fifth are that the lots were not appraised separately, that they were not offered for sale separately, and that they were not sold separately. This motion was overruled, and the sale confirmed.

The errors alleged in the petition in this court are that the district court erred in overruling the motion of the defendant to set aside the sale, and that the district court erred in permitting the lots to be sold in bulk, and refusing to sustain the objections

Digitized by Google

of the plaintiff in error, and in failing to require the appraisement and sale of the lots separately. The decree was erroneous in not fixing the amount chargeable to each lot respectively; but this error the defendant (now plaintiff in error) waived, and did not complain thereof in his objection in the district court, nor does he now in his petition in this court.

The decree of the court should stand, but can the sale be sustained under this decree? We think not. The statute provides that upon foreclosure of tax liens the tract or lot shall be sold in all respects, as far as practicable, as though the same were a mortgage. Section 179, Revenue Act [Comp. St. 1901, c. 77, art. 1]. And section 860 of the Code provides that "If * * * it shall appear to the court that the mortgaged premises are so situated that the sale of the whole will be more beneficial to the parties the decree shall, in the first instance, be entered for the sale of the whole premises accordingly." Where there is no such finding and decree, the tracts or lots must be appraised and sold separately. Laughlin v. Schuyler, 1 Neb. 409. There was no such finding and decree in this case, and the sheriff should have sold the tracts and lots separately. The objection to the sale was made in due time, and should have been sustained.

It is recommended that the order of the district court confirming the sale be reversed, and a new sale ordered.

OLDHAM and POUND, CC., concur.

Reversed, with directions.

LYNCH v. ENGLEHARDT-WINNING-DAVISON MERCANTILE CO.

(Supreme Court of Nebraska. July 10, 1901.)

FRAUDULENT CONVEYANCE—WIFE AS GRANTEE—PRESUMPTIONS—EXEMPTIONS—DIRECTING VERDICT.

1. Transactions between husband and wife to the prejudice of creditors should be carefully scrutinized, and their bona fides clearly established. There is a presumption against the good faith of such transactions, which must be overcome by affirmative proof.

2. One member of a partnership, even though the head of a family, cannot claim as exempt from forced sale upon execution any portion of the partnership property which has been levied upon to satisfy the claims of the firm creditors. Till's Case, 3 Neb. 261, followed.

3. It is not necessary to submit a cause to a jury unless there is evidence which will warrant a verdict in favor of the party producing it.

Commissioners' Opinion. Department No. 2. Error to District Court, Richardson County; Letton, Judge.

"Not to be officially reported."

Action by Charles D. Lynch against the Englehardt-Winning-Davison Mercantile Company. Judgment for defendant, and plaintiff brings error. Affirmed.

¶ 1. See Fraudulent Conveyances, vol. 24, Cent. Dig. §§ 337, 802, 814.

Reavis & Reavis, for plaintiff in error. F. Martin, for defendant in error.

OLDHAM, C. This was a suit in replevin, instituted against the sheriff of Richardson county, Neb., for the possession of a stock of millinery goods. The sheriff held the goods under an order of attachment issued from the county court of Richardson county, Neb., at the suit of the defendant against the firm of Lynch & Van Scyoc. At the trial of the cause in the district court the judgment creditor, Englehardt-Winning-Davison Mercantile Company, was substituted by agreement of the parties as defendant instead of the sheriff. The regularity of the attachment proceedings against the firm of Lynch & Van Scyoc was admitted. Plaintiff claimed title to the goods by virtue of a bill of sale executed to him by the firm of Lynch & Van Scyoc prior to the levy of the writ of attachment. After the testimony was taken, the court directed a verdict for the defendant for the amount of his judgment lien. Plaintiff brings error to this court.

The question to be determined from the record is whether there was any competent testimony shown in the bill of exceptions that would have been sufficient to have sustained a verdict for the plaintiff if one had been rendered by the jury; for, if there is any such evidence in the record, it would have been the duty of the trial judge to submit such evidence to the jury, under proper instructions, and his refusal to do so would constitute reversible error. Plaintiff contends that there is evidence in the record tending to show the good faith of the purchase of the stock of goods by the plaintiff prior to the attachment proceedings, and this claim we shall first examine in the light of the evidence as preserved in the bill of exceptions. Plaintiff is the husband of the senior member of the firm of Lynch & Van Scyoc on the 6th day of April, 1895. At the time of the purchase a part of the purchase price was paid in cash, and the remainder was to be paid in 30 and 60 days. Other purchases were made from time to time, and some remittances of small amounts were also made to the defendant. It appears from testimony offered by the plaintiff that the first payment was made by money furnished by Mrs. Lynch, and that the remaining payments were made out of the earnings of the firm; that the junior member of the firm, Miss Van Scyoc, expected to get money from her father to pay her share of the purchase price of the stock, but failed to do so. The evidence, however, clearly shows that all bills of goods were purchased in the firm name of Lynch & Van Scyoc, and that all remittances were made in that name, and that all transactions and correspondence between defendant and the firm were conducted in the firm name of Lynch & Van Scyoc. It also clearly appears that the plaintiff, Charles D. Lynch,

Digitized by Google

knew all about the financial condition of the firm at the time he made the pretended purchase of the goods of the firm. It also plainly appears that he recognized the concern as a firm, because his bill of sale was signed and executed by each member of the firm, and in his petition he alleges that he purchased the goods from the firm, and that Miss Van Scyoc owned a one-fourth interest in the stock of the firm. It is true that in his reply he attempts to deny the allegations of his petition so far as Miss Van Scyoc's interest in the firm was concerned, and to claim that Mrs. Lynch owned the entire stock of goods, and that it was exempt property, and not a subject of fraudulent alienation. But of this contention we shall speak later.

The evidence offered by plaintiff to sustain the claim of the bona fides of the purchase of the stock by him is lamentably weak and unsatisfactory. He admits that he was in the store on the 20th day of June, 1895, when the collecting agent and attorney of defendant came in with its account, and attempted to get the members of the firm to give him a chattel mortgage on the goods of the firm as a security for its debt. The evidence shows that this was in the forenoon of the 20th of June, 1895. The undisputed evidence is that the attorney for the defendant drew up a chattel mortgage on the effects of the firm for the security of its debt, and gave it to the members of the firm to sign and execute, and that they told him that they would see about it. The evidence also shows that they (the members of the firm) went to the office of their attorneys, and, instead of executing the chattel mortgage, made a bill of sale, copied from the description in the chattel mortgage, of the entire stock to plaintiff, and that they returned to the store after the bill of sale had been executed and delivered to plaintiff, and met the defendant's agent, and asked him to wait longer, and that they would try and get him some money to pay on the account, instead of giving him a chattel mortgage for security. The evidence also shows that there was no apparent change in the management of the firm after the bill of sale was given to the plaintiff. Plaintiff claims that he borrowed the money from his wife's father to pay for the stock. He also admits that he subsequently turned the stock over to his wife's mother. The law, as applicable to transactions of the character described in plaintiff's own testimony in this case, is well settled. The transaction was between near relatives, so far as the plaintiff and the senior member of the firm were concerned, and at a time of impending financial disaster to the grantors in the bill of sale; consequently the conveyance was prima facie fraudulent as to creditors, and the burden of proof was on the plaintiff to clearly and satisfactorily establish the good faith of the sale. Aultman v. Obermeyer, 6 Neb. 260; Banks v. Bartlett, 8 Neb. 329; Lipscomb v. Lyon, 19 Neb. 511, 27 N. W. 731; Koch v. Rhodes, 10 Neb. 447, 6 N. W. 767; Roy v. McPherson, 11 Neb. 200, 7 N. W. 873; Hoagland v. Wilson, 15 Neb. 320, 18 N. W. 78; Kirchman v. Corcoran (Neb.) 70 N. W. 916; Carson v. Stevens, 40 Neb. 112, 58 N. W. 845, 42 Am. St. Rep. 661; Steinkraus v. Korth, 44 Neb. 777, 62 N. W. 1110. It is also the law that where, as in the case at bar, the purchaser had knowledge of such facts as would lead any honest man, using ordinary caution, to make further inquiries whereby the fraud would be discovered, he would be deemed to have notice of the fraud. Temple v. Smith, 13 Neb. 513, 14 N. W. 527; Edwards v. Reid, 39 Neb. 645, 58 N. W. 202, 42 Am. St. Rep. 607. The evidence of plaintiff outlines nothing but a blotched and piebald caricature of an honest transaction that is tatooed with every badge of fraud known to the law writers, and the court below would have been derelict in his duty had he submitted this issue to the jury with any other than a peremptory instruction to find for the defendant.

The only other question to be disposed of is as to whether there was any competent testimony introduced by plaintiff tending to show that these goods were exempt property, and consequently not the subject of fraudulent alienation. As already pointed out in this opinion, the evidence clearly shows that this was an indebtedness of a partnership firm; that it was procured as such, and treated as such from the time the firm began business until the day the reply was filed in this suit in the court below. The wise and humane provisions for homestead and personal exemptions enacted by the Legislature for the benefit of the head of each family in this state have no application to personal or real property owned by a partnership firm. A partnership is a legal, but not a social, entity. It can own property, it can buy and sell, it can sue and be sued, and it can plead and be impleaded in the courts of the land; but it can neither marry or be given in marriage, nor perform any other social function essential to its being elevated to the dignity of becoming the head of a family. This court has repeatedly held that a member of a partnership firm, although the head of a family, cannot claim as exempt from a forced sale upon execution any portion of the partnership property which has been levied upon to satisfy the claims of the creditors of the firm. Till's Case, 3 Neb. 261; Roop v. Herron, 15 Neb. 73, 17 N. W. 353; Rosenbaum & Co. v. Hayden & Co., 22 Neb. 744, 36 N. W. 147; Hixon & Chatfield v. Nash, 12 Ohio St. 647, 80 Am. Dec. 390. It follows from the above that there was no competent testimony offered by the plaintiff to have sustained a verdict in his favor had the cause been submitted to the jury; hence we think that the trial court was fully justified in directing a verdict for

Digitized by Google

the defendant. Burns v. Fairmont, 28 Neb. 866, 45 N. W. 175; Slayton v. Fremont, E. & M. V. R. Co., 40 Neb. 840, 59 N. W. 510; Chicago, B. & Q. R. Co., v. Hildebrand, 42 Neb. 33, 60 N. W. 335; Zittle v. Schlesinger, 46 Neb. 844, 65 N. W. 892.

It is therefore recommended that the judgment of the district court be affirmed.

POUND and SEDGWICK, CC., concur.

Affirmed.

DAVIS et al. v. GREENWOOD et al.

(Supreme Court of Nebraska. Jan. 8, 1902.)

MORTGAGE FORECLOSURE—RIGHT TO REDEEM —CONTRACT—CONSTRUCTION—STATUTE OF FRAUDS—WAIVER.

1. G. held a first mortgage and D. and F. a second mortgage on certain town lots. G. foreclosed his mortgage, but failed to make D. and F. parties to the action. Prior to any sale under the decree of foreclosure D. and F. procured a conveyance of the lots from the owner in full satisfaction of their mortgage, and went into possession. They also entered into a verbal agreement with G. by the terms of which they were to pay him on a certain specified date in the future the full amount of his decree, together with costs of the action and the attorney's fee therein incurred, and to make a deed to G. conveying to him the lots as security for the performance of the agreement on their part, G. to reconvey to them when payment was made. *Held*, that D. and F., not being made parties to the action of foreclosure instituted by G., had a legal right to redeem from his mortgage by paying the amount of his decree, and that the agreement above set out was simply an agreement to give D. and F. the right to redeem on the terms therein mentioned without an action brought for that purpose, and that it could be enforced although not in writing. The defendant, in his answer, having admitted the agreement as claimed by the plaintiffs, has waived the statute, even if the contract was obnoxious thereto. Connor v. Hingtgen, 27 N. W. 443, 19 Neb. 472.

Commissioners' Opinion. Department No. 3. Appeal from District Court, Dixon County; Evans, Judge.

"Not to be officially reported."

Action by A. A. Davis and others against Joseph Greenwood and others. Judgment for defendants, and plaintiffs appeal. Affirmed.

W. E. Gantt and A. E. Barnes, for appellants. McCarthy & Pearson, for appellees.

DUFFIE, C. On March 27, 1896, Joseph Greenwood, one of the appellants, was the owner of a mortgage on lots 23 and 24 in block 5 in the village of Emerson, Neb., made to secure the sum of $300, and which was a first lien on said lots. The appellees, A. A. Davis and I. J. Fuller, were the owners of a second mortgage on said lots made to secure the payment to them of the sum of $250. On the date above mentioned, Greenwood commenced an action in the district court of Dixon county to foreclose his mortgage, but omitted to make Davis and Fuller, the second mortgagees, parties to such foreclosure proceedings. April 29, 1896, a decree of foreclosure was entered by the court, the amount found due being the sum of $350, which was to draw 10 per cent. interest from that date. On January 28, 1897, Davis and Fuller took from William Kellogg, the owner of the lots, a conveyance thereof in full satisfaction of their mortgage, and they allege that on the same day they entered into an oral agreement with Greenwood in effect as follows: They were to pay the taxes due on the land, together with the costs made in the foreclosure proceedings, including an attorney's fee of $25, and on the 1st day of October, 1897, they were to pay him the amount of his decree, with 10 per cent. interest thereon, which was computed and found to be $401.37. On the payment of these several sums Greenwood was to give them a quitclaim deed of the lots, and, to secure him the payment of said sums, they made to him a deed of the premises, thus vesting him with full title thereto. On the same day it is alleged they paid the sum of $50, being the amount of taxes due on the lots, the costs in the foreclosure case instituted by Greenwood, and the attorney's fee agreed upon, and they afterward executed to Greenwood a conveyance of the premises. October 1, 1897, they tendered to Greenwood the sum of $401.37, and demanded from him a conveyance of the lots, which he refused, and thereafter and prior to the commencement of this action Greenwood conveyed the lots to his sister and codefendant, Mrs. Lussier. November 19, 1897, Davis and Fuller filed their petition in this cause, setting out all of the foregoing facts, and the further fact that they had taken possession of the lots in controversy on January 28, 1897, and were then in possession, and asking that the deed from Greenwood to his sister be canceled, and that he be required to convey to them.

Greenwood, in his answer, does not deny the agreement as set out by the plaintiffs, except that he insists that, in addition to the payment of the decree, with interest thereon, and the taxes, costs, and attorney's fee, the plaintiffs were to turn over to him the possession of the premises. We copy the third paragraph of his answer: "Further answering, the defendant denies that he ever entered into a contract with plaintiffs as set out in paragraphs three and four of plaintiffs' petition, but avers the facts to be that he did agree, on or about the 28th day of January, 1897, to allow the plaintiffs to redeem said property for the amount due him, namely, the sum of $350, and interest at ten per cent. thereon, provided the said plaintiffs would procure the title to said premises, and convey the same to this defendant, and also turn over to this defendant the possession of said premises for defendant's use and benefit, and that upon

---

¶ 1. See Frauds, Statute of, vol. 23, Cent. Dig. §§ 365, 366.

Digitized by Google

the payment to this defendant on or about the 1st day of October, 1897, the sum of money due him against said premises, that he would reconvey to the said plaintiffs said premises, and turn the same over to them. Defendant avers that the plaintiffs failed, neglected and refused to turn over the possession of said premises as agreed upon, but kept the same themselves, and have maintained possession of said premises ever since, collecting the rents and profits therefrom, which rents and profits they have failed to account for or turn over to this defendant." The district court found the facts as alleged by the plaintiffs, and entered a decree canceling the deed made by Greenwood to his sister, and ordering him to convey the lots to the plaintiffs upon their paying into court within 20 days the sum of $350, with 10 per cent. interest thereon from the 29th of April, 1896, or upon the immediate payment by them of the sum of $441. From this decree the defendants have appealed.

It is first insisted that no agreement was ever consummated between the parties as alleged by the plaintiffs. In the face of the third paragraph of the answer, above set out, we cannot understand this claim. Both parties, by their pleadings, assert an agreement concerning these lots, and it is quite plain to us that the only difference between them is the claim made by Greenwood that he was to be given possession of the property, and to have the rents and profits arising therefrom, in addition to being paid the amount found due him in the decree of foreclosure, with 10 per cent. interest thereon, together with costs and attorney's fees. The district court found against him, as we think, on ample evidence going to show the agreement as claimed by the plaintiffs; and it was not until this finding was made that he takes the position that no agreement was ever consummated. The statute of frauds is urged on the argument as an obstacle standing in the way of affording relief to the plaintiffs. This is an objection not urged in the lower court, nor can we see that there is any merit in the claim. The plaintiffs held a second mortgage on the lots in question. Greenwood, in his foreclosure proceedings, did not make them parties. A sale under this decree would not pass good title, for the reason that the plaintiffs, not being foreclosed of that right, might at any time during the life of their mortgage redeem from Greenwood or the purchaser at his foreclosure sale. In this condition of affairs, the parties met, and confessedly made an agreement respecting their rights in the premises. That agreement was so far perfected that the plaintiffs paid part of the consideration, took possession of the lots, and executed to Greenwood a conveyance thereof as security that they would pay him the balance due under the agreement. The whole effect of this agreement was simply to give the plaintiffs the privilege of redeeming the Greenwood mortgage without an action brought for that purpose. That they had the legal right to redeem by suit is unquestioned; that an oral agreement, based upon a sufficient consideration, allowing them to redeem without suit brought for that purpose, but upon condition made by the parties themselves, is obnoxious in any way to the statute of frauds, we do not believe. But, should we be mistaken in this view of the case, the decree should be upheld for another reason. It was held in Connor v. Hingtgen, 19 Neb. 472, 27 N. W. 443, that, "where the defendant, in his answer, admits substantially the contract set out in the petition, but alleges that the plaintiff has violated its provisions, and there is no plea of the statute of frauds, the statute will be considered waived." In either view of the case, we are satisfied that the decree of the district court is right, and recommend its affirmance.

ALBERT and AMES, CC., concur.

Affirmed.

UNION PAC. R. CO. v. LOTWAY.

(Supreme Court of Nebraska. Jan. 8, 1902.)

NEW TRIAL—DEATH OF JUDGE—INSTRUCTIONS—OBJECTIONS.

1. A court presided over by the successor of a deceased judge has authority to grant or deny a motion for a new trial in a case tried by the deceased while in office.

2. That a court has given an instruction covering matters outside the issues made, is not a cause of complaint by a party who has himself requested an instruction substantially the same as that of which complaint is made.

Commissioners' Opinion. Department No. 3. Error to District Court, Dodge County; Grimison, Judge.

"Not to be officially reported."

Action by Charles Lotway against the Union Pacific Railroad Company. Judgment for plaintiff. Defendant brings error. Affirmed.

W. R. Kelley, J. U. Baldwin, and E. P. Smith, for plaintiff in error. F. W. Button, for defendant in error.

DUFFIE, C. This action was brought against the Union Pacific Railroad Company to recover damages for the destruction by fire of the plaintiff's buildings, together with their contents. The petition alleges "that said fire was caused by the negligence and want of proper repair of the locomotive and engines of the defendant, and by carelessness of the agents and servants of said defendant." Among other allegations of the answer is the following: "Further answering, said defendant avers that the engines on all of the trains operated or controlled by it in the state of Nebraska, at or about the date of said alleged fire, were in perfect or-

¶ 1. See Judges, vol. 29, Cent. Dig. § 161.

Digitized by Google

der and repair, and properly constructed and equipped with all appliances in general use for preventing the escape of fire therefrom, and were managed with care and skill by competent and experienced employés of the defendant, appointed therefor, and in charge of said engines; and that the said engines were subjected and underwent careful and thorough inspection by a competent and skillful person as often as once in every two days before going upon the road, and, if any defect was discovered, it was at once thoroughly and perfectly repaired on the said engine before the same was sent out upon the road." The jury returned a verdict in favor of the plaintiff below in the sum of $175, upon which judgment was entered, and the railroad company has brought the record here for review.

The case was tried before the late Judge Marshall, who died before the motion for a new trial was passed on. The motion for a new trial came on to be heard before Judge Grimison, who overruled the same, and entered judgment on the verdict.

The first assignment urged in the brief of the plaintiff in error is the order of Judge Grimison in overruling the motion for a new trial. It is insisted that the plaintiff in error was entitled to a new trial as a matter of right; that Judge Marshall, who tried the case, having deceased without disposing of the motion, no other judge was qualified to pass upon the evidence, and to say whether the verdict was supported by the evidence; that the appearance and demeanor of the witnesses, their candor, or apparent prejudice in favor of one party or the other, were matters which could not be determined by any one except the trial judge who saw and heard them. While there is much force in this argument, the question has been decided against the contention of the plaintiff in error in the late case of Goos v. Fred Krug Brewing Company, 60 Neb. 783, 84 N. W. 258.

The court, in its ninth instruction, told the jury that: "If, from the evidence, you find and believe that said fire was started and set out by sparks of fire emitted from the smokestack from the defendant's said engine, and that they were so emitted by reason of defendant's negligence in not having equipped said engine with a spark arrester, in proper repair, of the most approved kind in general use for locomotive engines, and that by reason thereof the said sparks of fire were so emitted, and thereby kindled and started said fire and burned plaintiff's said property, then the jury in that case should find for the plaintiff." It is insisted that this instruction is erroneous, for the reason that the only negligence complained of in the petition filed was the want of proper repair of the locomotive and engine of the defendant. We were at first disposed to think that the court erred in instructing the jury as above set forth. The only negligence which the plaintiff below alleged against the defendant below was a failure to keep its engines in proper repair. It is nowhere alleged or claimed that the engines were not equipped with the best appliances in general use, and the issue was not made that the company was in any manner negligent in the character of the appliances with which its locomotives were equipped. The complaint and the sole issue tendered by the plaintiff was the negligence of the company in a failure to properly repair its engines. We find, however, that the instruction given by the court was in effect asked by the plaintiff in error.

The second request of the plaintiff in error is as follows: "If you believe from the evidence that the plaintiff's property was injured by fire caused by fire or sparks escaping from defendant's locomotive, while passing along the railroad, in manner and form as charged in plaintiff's petition, then these facts make a prima facie case of negligence against the defendant, and the burden of proof is then upon the defendant to rebut this prima facie case by showing affirmatively, by a preponderance of evidence, that at the time in question the engine was properly constructed and equipped with improved appliances in general use by railroads for preventing the escape of fire, and that these appliances were all in good repair and condition as regards the escape of fire, or that all reasonable care and caution had been taken to keep them in such repair and condition, and that the engine was carefully and skillfully handled as regards the escape of fire therefrom, provided the plaintiff was guilty of no fault or negligence contributing to the injury." A party cannot predicate error upon the action of the court in giving an instruction which he himself requests.

Complaint is also made that the verdict is not supported by the evidence. A careful examination of the evidence leads us to believe that under the well-known rule of this court the verdict ought not to be disturbed. The evidence that the fire was caused by the engine of the plaintiff in error is not of the most satisfactory character, but we cannot say that there is no evidence sufficient to support it.

We recommend the affirmance of the judgment.

ALBERT and AMES, CC., concur.

Affirmed.

JOHN STEWART & CO. v. ALLEN et al.

(Supreme Court of Nebraska. Jan. 8, 1902.)

APPEAL—REVIEW.

1. Alleged errors of the trial court in the exclusion of evidence cannot be examined on appeal.

2. Evidence examined, and *held* sufficient to sustain the judgment.

Commissioners' Opinion. Department No. 2. Appeal from District Court, Custer County; Grimes, Judge.

Digitized by Google

"Not to be officially reported."

Action by John Stewart & Co. against Edgar F. Allen and others. Judgment for defendants, and plaintiff appeals. Affirmed.

Flansburg & Williams, for appellant. J. S. Kirkpatrick, R. E. Brega, and L. E. Kirkpatrick, for appellees.

OLDHAM, C. This was a suit to foreclose a real estate mortgage made and executed by Eugene F. Allen and wife to the Dakota Mortgage Loan Corporation, and alleged to have been indorsed by said corporation before maturity for a valuable consideration, and in the ordinary course of business, to the plaintiff.

Defendant Caldwell filed a separate answer to this petition, admitting that defendant Allen and wife had executed the note and mortgage sued on to the Dakota Mortgage Loan Corporation, which subsequently changed its name to the Globe Investment Company, but alleged that defendant Allen had paid the note and mortgage in full at maturity to the Globe Investment Company, and that said mortgage was duly released by said Globe Investment Company, and that after the release of said mortgage he purchased the lands in controversy free of all liens and incumbrances. He also denied that plaintiff was the owner of the note and mortgage, and denied that it was purchased by the plaintiff before maturity for any consideration. Plaintiff replied, denying the allegations of defendant's answer. It was admitted that defendant Allen paid the note and mortgage in full to the Globe Investment Company at the time and place of its maturity. Plaintiff then offered in evidence the indorsement on the note of the Globe Investment Company, formerly the Dakota Mortgage Loan Company, which was excluded by the trial court. Plaintiff then offered depositions tending to prove the purchase and indorsement of the note. These were all excluded by the trial court, and judgment entered as follows: "And this cause came on further to be heard, upon the evidence being submitted to the court, find that the note and mortgage in suit were paid in full to the Globe Investment Company, formerly the Dakota Mortgage Loan Corporation, the payee of said note, at the place of payment in Boston, Massachusetts. That the endorsement on the note, is not sufficient to transfer the legal title to the plaintiff, so as to make the plaintiff an innocent holder for value, so as to cut off defenses. To which findings the plaintiff excepts. It is therefore considered, adjudged, and decreed by the Court, that the defendant go hence without day, and that this cause be and the same is hereby dismissed at the costs of plaintiff. To all of which plaintiff excepts."

Plaintiff now seeks to have this judgment reversed on appeal. It is a rule of practice in this court, so well established that it might be designated as elementary, that alleged errors of the trial court in the exclusion of evidence can only be reviewed on error proceedings, and cannot be reviewed on proceedings on appeal, hence we can only examine this judgment by the light of the pleadings and the evidence which was admitted by the trial court. Ainsworth v. Taylor, 53 Neb. 484, 73 N. W. 927; Scroggin v. National Lumber Co., 41 Neb. 196, 54 N. W. 548; Zimmerman v. Zimmerman, 59 Neb. 80, 80 N. W. 643. The answer denies the ownership and purchase of the note by the plaintiff. The evidence admitted shows that the note was paid in full at maturity at its place of payment to the Globe Investment Company. The evidence offered tended to show the indorsement of the note to the plaintiff by the Globe Investment Company was excluded, and, as we are precluded by the rule governing proceedings on appeal from examining the action of the trial court in excluding this evidence, we can see nothing to do but to recommend that the judgment of the trial court be affirmed because the judgment is fully supported by the pleadings and evidence which was admitted, and it is so recommended.

POUND and SEDGWICK, CC., concur.

Affirmed.

ATKINSON v. CHICAGO & N. W. RY. CO.

(Supreme Court of Wisconsin. Sept. 29, 1903.)

RAILROADS—KILLING STOCK—OPEN GATES—NEGLIGENCE—CONTRIBUTORY NEGLIGENCE.

1. Whether a railroad section foreman charged with the duty of keeping the fence inclosing a railroad track in repair and the gates therein closed, who saw a gate therein open, and persons haying in an adjoining field, and knew that the persons had been accustomed to leave it open, and failed to close it that day, or return the following day and close it, was negligent, was for the jury.

2. Where a horse escaped from a pasture sufficiently fenced, and then passed on a railroad track through an open gate in the railroad fence, and was killed by a train, the owner's failure to close the gate a week before, on taking the horse to the pasture, was not negligence precluding a recovery.

3. There was no contributory causal connection between a person's failure to close a gate in a railroad fence and the fact that his horse, a week later, passed through it, and onto the track, where it was killed by a train, where the gate was closed several times during the interval.

4. Under the statute making a railroad company absolutely liable for all damage to stock occasioned by its failure to maintain sufficient fences, a railroad company is liable for killing a horse which escaped from the owner's pasture, sufficiently fenced, and then entered on the company's track through a gate in the fence adjoining the land of a third person, and negligently left open by the company.

Appeal from Circuit Court, Brown County; Samuel D. Hastings, Jr., Judge.

Action by John Atkinson against the Chi-

Digitized by Google

cago & Northwestern Railway Company. From a judgment for plaintiff, defendant appeals. Affirmed.

Plaintiff lived some little distance south of the defendant's railway track, and owned an extensive pasture lying on the north side of the track, and somewhat to the westward of his residence. On August 18th he sent a hired man to put a horse into said pasture. They entered upon the right of way of the defendant, proceeded westward a distance, and found an open farm gate into the premises of a third person, through which the hired man took the horse, and proceeded from a quarter to half a mile further westward to the plaintiff's pasture and put the horse in, carefully repairing the pasture fence, so that there is no question as to the sufficiency thereof. He did not close the farm gate through which he passed. During the ensuing week the farm gate was frequently, if not continuously, open, and especially in the afternoon of the following Saturday, the 24th of August, it was observed to be open by the defendant's section foreman, whose duty it was to look after the condition of the fences. He noticed that haying was in progress near the gate, and did not close it, and did not see it again until the following Monday. Some time during Sunday, the 25th, the plaintiff's horse, having escaped from the pasture without negligence on plaintiff's part, entered upon the defendant's right of way through this open gate, and was killed. This action was to recover damages on the ground of negligence of the defendant in failing to maintain its fences. The jury found that the defendant's section foreman was guilty of negligence in not seeing that the gate in question was closed before the horse was killed, and that, with the knowledge he had, a man of ordinary intelligence and prudence, in his position, ought to have reasonably anticipated that the gate would be left open if he did not close it. Upon this verdict judgment for the plaintiff was entered, from which the defendant appeals.

Edward M. Hyzer, for appellant. Sheridan & Evans, for respondent.

DODGE, J. (after stating the facts). 1. Refusal to direct verdict for defendant. Appellant's first contention in this connection is that there was no evidence of negligence on its part. It appeared that the section foreman charged with the duty of keeping the fence in repair and gates closed saw the gate open in the afternoon of Saturday, and people haying in the adjoining field, who, to his knowledge, had been accustomed to leave the gate open on their departure, so that he had reason to believe they would do so on this occasion. He, however, went away, and neither that night nor the next day, during which the plaintiff's horse was killed, did he return. We are unable to say, as matter of law, that such neglect was the care to be expected from an ordinarily prudent person under the circumstances. The defect in its fence being thus brought to the notice of appellant, it owed the duty of due diligence in its repair. Section 1810, Rev. St. Wis. 1898; Laude v. Railway, 33 Wis. 640; Curry v. Railway, 43 Wis. 665; Wickham v. Railway, 95 Wis. 23, 26, 69 N. W. 982; May v. Railway, 102 Wis. 673, 79 N. W. 31; Crosby v. Railway, 58 Mich. 458, 25 N. W. 463; Wabash R. Co. v. Perbex, 57 Ill. App. 62; Manwell v. Railway, 89 Iowa, 708, 57 N. W. 441. What period of utter inaction was consistent with due diligence was a question of fact, involving consideration of many surrounding circumstances, and was properly one for the jury.

Appellant next contends that the evidence convicted plaintiff, or rather his hired man, of contributory negligence. The evidence designated as thus effective is that the hired man left this gate open as he found it when he went through on his way to the pasture and on his return. The jury have found that this occurred a week before the horse escaped, and the evidence is undisputed that the pasture was inclosed by an entirely safe and sufficient fence. We find difficulty in crediting counsel with seriousness in arguing that it is negligence per se for a farmer to leave a horse in a pasture inclosed by a good and sufficient fence because somewhere else a gate is open through which the horse might pass if once outside of the pasture. However, we cannot agree with the contention. Such conduct is too frequent with the mass of mankind to warrant us in so doing. Neither can we discover any contributory causal connection between leaving the gate open on August 18th and the passage of the horse through the same on the 25th, when, according to the testimony of appellant's sectionman, it was closed several times in the interval.

2. Error is assigned upon an instruction to the effect that, if the section foreman for the first time saw the gate open, but with a load of hay approaching it from the other side, he would have been justified in assuming that the person about to pass through would close the gate, and would have been under no obligation to pay any further attention; but, if he knew it would be left open, then the question arose for the jury whether he exercised the care of an ordinarily prudent man under like circumstances. We have already declared our view that under such circumstances the question did properly arise for decision by the jury, and the instruction assailed went no further than to so state, wherein was no error. Whether the preliminary statement that there would have been no negligence if the foreman had not known the gate would be left open is accurate, might be subject to question (Wabash R. Co. v. Perbex, 57 Ill. App. 62), but, if erroneous at all, the statement errs in favor of the appellant.

Digitized by Google

3. The remaining assignment of error is alleged upon the ordering of judgment upon the special verdict, because there is contained therein no finding of proximate cause. It is admitted that the horse entered upon the right of way by the open gate. It is said by Ryan, C. J., in Curry v. Railway, 43 Wis. 676, that, of course, the open gate does not cause the injury to the horse; but the statute does not require this as a condition of the liability; merely that the result shall be occasioned by the absence of or defect in the fence, and that the injury from a train suffered by an animal which enters by means of such opening is occasioned thereby. Neither does the statute limit the company's liability to cases where an ordinarily prudent person might have anticipated that animals would probably enter upon the right of way, but imposes absolute liability for any which do enter by reason either of failure to fence or of negligent failure to maintain fence, subject only to defense of contributory negligence in the latter case. The lawmakers have legislatively assumed the probability that animals will enter on a railroad which is fenced either inadequately or not at all, and dispensed with the necessity of a finding that an ordinarily prudent man would anticipate such event. The railway company is subjected to the duty of fencing not alone for the benefit of the adjoining owner, but of the public at large. 3 Elliott on R. R. § 1190; Curry v. Railway, 43 Wis. 684; Herrell v. Railway, 114 Wis. 605, 609, 90 N. W. 1071. The danger to be averted, and which the statute assumes to be probable, is not only that to the adjoining owner's cattle lawfully on his premises, but to any others which may be there, either lawfully or as trespassers. Curry v. Railway, supra; May v. Railway, supra; Herrell v. Railway, supra. Hence the fact urged by appellant that the owners of the land adjoining this fence were not accustomed to pasture cattle there in no wise absolved the appellant from the liability imposed by the statute in case of negligent omission to maintain its fence. We are entirely satisfied that the verdict in this case found all the controverted facts necessary, in connection with those uncontroverted, to warrant the judgment in plaintiff's favor.

Judgment affirmed.

McCARTHY v. MURPHY et al.

(Supreme Court of Wisconsin. Sept. 29, 1903.)

WATERS AND WATER COURSES — LAKES — RIGHTS OF SHORE OWNERS—PIERS—PRIVATE NUISANCE—DESTRUCTION—CONVERSION OF MATERIAL.

1. The right to exclusive use of the bed of an inland lake below high-water mark for the construction of wharves, piers, etc., adjacent to the shore, attaches to the ownership of the shore, and hence the construction of a pier below low-water mark by a person having no rights to the shore is a private nuisance as against shore owners.

2. Where lessees of the shore of a lake, after notice to plaintiff, who had erected a pier below high-water mark opposite their land without authority, to remove the same, on his failure to do so, removed the pier themselves, and placed the material on the shore of the lake, where plaintiff thereafter took possession thereof, defendants were not guilty of converting such material.

Appeal from Circuit Court, Dodge County; James J. Dick, Judge.

Action by John McCarthy against William Murphy and Jerre Murphy. From a judgment in favor of defendants, plaintiff appeals. Affirmed.

An action to recover damages from respondents for removing a pier, which appellant had erected on the bed of Fox Lake, Dodge county. The respondents were lessees of a tract of land on Fox Lake, a navigable body of water. The land was owned by one Elias Kennedy, who leased it to respondents April 23, 1902, for one year, with the privilege of extension at the option of the lessees. Appellant's pier was erected in front of the premises included in the lease. The pier was connected with the shore by a loose plank or planks, for landing on the premises of respondents. Appellant was engaged in carrying passengers by boat, receiving and leaving them on this pier. He had no right or title to the bank on the shore of the lake where the pier was located. Respondents and their lessor, Elias Kennedy, caused a written notice to be served on appellant July 31, 1902, requiring him to remove the pier. This appellant refused and omitted to do. Thereafter respondents removed the pier, placing the material on the shore. Subsequently appellant took possession of it. The pier was constructed and located wholly within and upon the bed of the lake and shore of the premises occupied by respondents as lessees. They conducted a hotel and summer resort, and engaged in the business of conveying passengers by row, sail, and steam boats. They had constructed and owned a pier abutting on the bank for the use of guests and boat passengers. The court found that the plaintiff had no cause of action, and awarded judgment to respondents for costs and disbursements.

M. E. Burke, for appellant. North & Lindley (M. L. Lueck, of counsel), for respondents.

SIEBECKER, J. (after stating the facts). Many of the errors assigned pertain to questions of fact. Upon an examination of the evidence, we find there was conflicting evidence on material issues, and that the conclusions of the court were supported by evidence. It would serve no useful purpose to point out such evidence in the record; the conclusions of fact must stand.

The claim is made that respondents had no rights or privileges, extending beyond the high-water mark on the land occupied by

Digitized by Google

them, different from and in addition to those of the public. This contention is without merit in the law of this state. It has been adjudged by this court as to the shore owner: "As proprietor of the adjoining land, and as connected with it, he has the right of exclusive access to and from the waters of the lake at that particular place; he has the right to build piers and wharves in front of his land out to navigable waters, in aid of navigation, not interfering with the public use. These are private rights, incident to the ownership of the shore, which he possesses, distinct from the rest of the public. All the facilities which the location of his land with reference to the lake affords he has the right to enjoy for purposes of gain or pleasure; and they oftentimes give property thus situated its chief value. It is evident from the nature of the case that these rights of user and exclusion are connected with the land itself, grow out of its location, and cannot be materially abridged or destroyed without inflicting an injury upon the owner, which the law should redress. It seems unnecessary to add the remark that these riparian rights are not common to the citizens at large, but exist as incidents to the right of the soil itself, adjacent to the water. * * * In such ownership they have their origin. They may and do exist, though the fee in the bed of the river or lake be in the state." Delaplaine v. C. & N. W. Ry. Co., 42 Wis. 214, 24 Am. Rep. 399; Priewe v. Improvement Co., 93 Wis. 534, 67 N. W. 918, 33 L. R. A. 645, and cases cited. When such owner exercises these rights, he cannot invade the riparian rights of other bank owners. As to them, he has the same rights as the public. An intrusion of another's riparian rights is a legal wrong, which the law will redress. Nor can a stranger, by such intrusion on the bed of the water, acquire any vested rights or interests as against the riparian owners. Any structure erected by him, under such circumstances, is a private nuisance. The proprietor of such rights has the legal authority to protect them in a lawful and peaceable manner, to the extent of removing a structure, such as a pier, erected on the bank and bed of the waters in front of his lands. Diedrich v. Ry. Co., 42 Wis. 248, 24 Am. Rep. 399; Cohn v. Boom Co., 47 Wis. 322, 2 N. W. 546; Yates v. Milwaukee, 10 Wall. 497, 19 L. Ed. 984. Appellant had acquired no right to maintain this pier at the point of its location by grant or license. It is assigned that the facts fail to support the conclusions of the trial court upon this issue. The evidence is conflicting whether Kennedy, the owner of the bank of the lake, at any time gave appellant a license to build the pier at the place located or not. The trial court found the fact against this contention, upon the disputed evidence, which sets the question at rest. When appellant erected and sought to maintain this pier, he did an injury to respondents, in the nature of a private nuisance, which they had a right to remove, to prevent injury from its continuance. Cooley on Torts (2d Ed.) p. 48; Larson v. Furlong, 50 Wis. 681, 8 N. W. 1.

It is further contended that respondents, after removing the pier, appropriated the material to their own use. Nothing is disclosed to justify this charge. Upon the evidence adduced, the court found that respondents carefully removed the pier, placed the material upon the shore of the lake, and that appellant took possession of such material. There is evidence to sustain this conclusion. We find no error in the record.

The judgment of the circuit court is affirmed.

PETERSON v. CHICAGO & N. W. RY. CO.

(Supreme Court of Wisconsin. Sept. 29, 1903.)

CARRIERS — INJURIES TO LICENSEES — EXPRESS MESSENGERS — CONTRACTS — EXEMPTION FROM LIABILITY — VALIDITY — PUBLIC POLICY—ASSENT—ENFORCEMENT.

1. A contract by an express messenger, relieving a railroad company from liability for personal injuries to him while riding on its train in the performance of his duties, caused by the ordinary negligence of the railroad's employés, is valid, and not contrary to public policy.

2. Where an express messenger contracted with the express company as a part of his contract of employment to exempt the express company and the transportation companies with which it dealt from all liability for personal injuries to him arising from negligence or otherwise, and agreed that the stipulation should inure to the benefit of all such transportation companies as fully as if made directly with them, the contract was enforceable by a railroad company by the negligence of which the messenger was injured while performing his duties, as a contract made for the benefit of a third person, whether the railroad company knew of or assented thereto before the commencement of the action or not.

Appeal from Circuit Court, Brown County; Samuel D. Hastings, Judge.

Action by Myron L. Peterson against the Chicago & Northwestern Railway Company. From an order overruling a demurrer to defendant's answer, plaintiff appeals. Affirmed.

This is an action to recover for personal injuries. The complaint alleges that the plaintiff was an express messenger in the employ of the American Express Company, and that in the course of his employment, and on the 27th day of March, 1901, he was riding in the express car of the defendant's passenger train running from Milwaukee to Green Bay, and that said train, by the negligence of defendant, ran into a freight train, by reason of which collision the plaintiff suffered severe personal injuries. The answer alleged, in substance, that at the time of said collision there was existing and in force between the defendant and the American Express Company a written contract providing

¶ 1. See Carriers, vol. 9, Cent. Dig. § 1252.

Digitized by Google

for the transportation of express matter and the necessary employés of the express company over the defendant's lines, which contract contained the following provision, among others: "Seventh. As one of the express conditions of this contract the express company hereby binds and obligates itself to save harmless and fully indemnify the railway company and its officers and employees from and against all actions and liabilities for loss or damage resulting in any manner whatever to the property of, or freight and express matter in charge of the express company, or to any of its employees, agents, messengers or officers while traveling as aforesaid upon any line covered by this agreement, it being distinctly understood and agreed that all damages resulting to express matter or to the property of the express company or to persons engaged in the service of the express company while engaged in such service, shall be borne by the express company." That at the same time there was a contract in force between the plaintiff and the American Express Company which contained the following provisions: "Now, therefore, in consideration of the premises and of my said employment, I do hereby assume all risk of accidents and injuries which I shall meet with or sustain in the course of my employment, whether occasioned or resulting by or from the gross or other negligence of any corporation or person engaged in any manner in operating any railroad or vessel, or vehicle, or of any employee of any such corporation or person or otherwise, and whether resulting in my death or otherwise. And I hereby agree to indemnify and save harmless the American Express Company of and from any and all claims which may be made against it at any time by any corporation or person under any agreement which it has made or may hereafter make, arising out of any claim or recovery upon my part, or on the part of my representatives, for damages sustained by reason of my injury or death, whether such injury or death result from the gross negligence of any person or corporation or of any employee of any person or corporation, or otherwise. And I hereby bind myself, my heirs, executors and administrators with the payment to such express company, upon demand, of any sum which it may be compelled to pay in consequence of any such claims, or in defending the same, including all counsel fees and expenses of litigation connected therewith. I do further agree that in case I shall at any time suffer any such injury, I will at once, without demand, and at my own expense, execute and deliver to the corporation or persons owning or operating such railroad, stage or steamboat line upon which I shall be injured, a good and sufficient release under my hand and seal of all claims, demands and causes of action arising out of such injury or connected with or resulting therefrom. And I do hereby ratify all agreements heretofore made by said express company with any corporation or persons operating any railroad, stage or steamboat line in which said express company has agreed in substance that its employees shall have no cause of action for injuries sustained in the course of their employment upon the line of such contracting party and I agree to be bound by each and every of such agreements in so far as the provisions thereof relative to injuries sustained by employees of the company are concerned, as fully as if I were a party thereto. And I do hereby authorize and empower said express company at any time while I shall remain in its service, to contract for me and on my behalf in its own name or in mine with any corporations or persons operating any railroad, stage or steamboat line, for my transportation as messenger or employee free of charge upon the condition and consideration that neither I nor my personal representatives, nor any person claiming under me, will make any claim for compensation because of any injury sustained by me, whether resulting from the gross negligence of such corporations or persons or of any employee of such corporations or persons or otherwise, and the contract so made shall be as binding and obligatory upon me as if signed and delivered by me. And I do hereby further agree that the provisions of this agreement shall be held to inure to the benefit of any and every corporation and to all persons upon whose railroad, stage or steamboat line the American Express Company shall forward merchandise, as fully and completely as if made directly with such corporations or persons." The plaintiff demurred generally to the answer, which demurrer was overruled, and the plaintiff appeals.

Sheridan & Evans, for appellant. Miller, Noyes & Miller (Greene, Fairchild, North & Parker, of counsel), for respondent.

WINSLOW, J. (after stating the facts). The general question presented in this case is whether a railway company can be relieved by contract from liability to an express messenger for personal injuries suffered by him while riding on its train in performance of his duty, such injuries being proximately caused by the ordinary negligence of the employés of the company. The question is new in this state. This court has held that a common carrier may by contract exempt itself from liability to a person traveling on a free pass for injuries caused by the ordinary negligence of its employés, but not from the consequence of their gross negligence. Annas v. M. & N. R. Co., 67 Wis. 46, 30 N. W. 282, 58 Am. Rep. 848. Also that it is against public policy to allow a common carrier to stipulate for exemption from liability for negligence of its employés resulting in loss or injury to a passenger for hire. Abrams v. M. L. S. & W. Co., 87 Wis. 485.

Digitized by Google

58 N. W. 780, 41 Am. St. Rep. 55. Neither of these cases, however, touch the exact question before us, nor does the early case of Chamberlain v. M. & M. R. R. Co., 7 Wis. 425, Id., 11 Wis. 248, throw any light upon it. The question is an interesting one, and might be discussed at great length.

It seems doubtful, however, whether any good result would be reached by such a discussion. The exact question here presented has been discussed with great learning and ability by the Supreme Court of the United States in the case of Baltimore, etc., Railway Co. v. Voigt, 176 U. S. 498, 20 Sup. Ct. 385, 44 L. Ed. 560, and the result there reached was that an express messenger, under the facts here presented, was not a passenger for hire, and that for that reason the contracts exempting the railroad company from liability were not against public policy, but valid. We entirely agree with that result. It commends itself to our judgment, not only upon reason, but upon the great weight of authority. The express messenger is not a person who has applied to a common carrier for transportation, and is entitled to that transportation without condition, upon payment of his fare, but a person who voluntarily goes upon a train, not for transportation, but to transact certain business for the express company which it is allowed to transact, not because the railroad company is a common carrier, but because of a contract between the express company and the railroad company by which the express company and its messengers were granted rights which the railroad company could not be compelled to grant as a common carrier. We could add nothing to the discussion in the Voigt Case, and hence we content ourselves with announcing our concurrence with the doctrines there laid down.

It is said that there is a distinction between this case and the Voigt Case in that by the contract between the railway company and the express company in the Voigt Case the express company agrees to indemnify the railway company from all liability, whether resulting from negligence or otherwise, whereas in the case at bar the agreement is simply to indemnify against damage resulting in any manner whatever. It is said that such contracts are strictly construed against the railway company, and that there must be an express stipulation exempting the company from the results of negligence in order to effect that result, and Black v. Goodrich T. Co., 55 Wis. 319, 13 N. W. 244, 42 Am. Rep. 713, is relied upon. It is not necessary in the present case either to affirm or deny that the agreement between the express company and the railway company covered injuries resulting from negligence, because in this case the plaintiff himself, when he entered on his employment, agreed to exempt the express company and the transportation companies with which it dealt from all liability for personal injuries whether arising from negligence or otherwise, and also agreed that this stipulation should inure to the benefit of all such transportation companies as fully as if made directly with them. This was a promise, upon sufficient consideration, made to one person for the benefit of a third person, which could be enforced by such third person whether such third person knew of or assented to the promise before the commencement of the action or not. Tweeddale v. Tweeddale (Wis.) 93 N. W. 440, and cases cited.

Order affirmed.

MORTON v. SMILEY et al.

(Supreme Court of Wisconsin. Sept. 29, 1903.)

CO-TENANTS — SALE OF LAND — CONTRACTS — BREACH—QUESTION FOR JURY—TRUSTS.

1. Plaintiff, who was the owner of an undivided eighth of certain real estate, which was incumbered by judgments against him in an amount largely exceeding his share of the price at which it was agreed with the other owners to sell the same, testified that defendants agreed that, if he would execute a deed to his interest, the deed should be placed in the custody of one of the defendants, and that they would see that plaintiff received his proportionate share of the purchase price in money, or by application on the judgments against him; but that, instead of so doing, defendants delivered the deed to the grantee, who was insolvent, and who immediately thereafter conveyed the property to an innocent purchaser, without payment of plaintiff's share of the price. *Held*, that it was error to direct a verdict for the defendants, on the ground that the evidence failed to prove any trust reposed in defendants.

Appeal from Circuit Court, Green County; E. B. Belden, Judge.

Action by Volney Morton against William Smiley and others. From a judgment in favor of defendants, plaintiff appeals. Reversed.

This action was upon a complaint alleging that the plaintiff, being owner of an undivided one-eighth of certain real estate in Green county, consented to a sale of the entire property at $900; but his one-eighth being incumbered by judgments largely exceeding his share of the purchase price, which he could not presently satisfy, he executed, with the other owners, a warranty deed, which was placed in the custody of the defendant Sherron, upon an agreement by both defendants that they would see that plaintiff received, either directly in money, or by application upon the judgments against him, his proportionate share of the purchase price, to wit, $112.50; that the defendant Sherron, in breach of such agreement, delivered such deed to the grantee, Broderick, without any payment by him on account of plaintiff's share; that before plaintiff learned of such delivery, Broderick had become insolvent, and had conveyed the premises to an innocent purchaser; that plaintiff meanwhile had been compelled to pay and satisfy all of the judgments against him—whereby he prayed to recover of both defendants the agreed sum, $112.50. The de-

Digitized by Google

fense was substantially a denial of any agreement on the part of either defendant. At the close of the trial, the court directed a verdict in favor of the defendants, whereon judgment was entered, from which the plaintiff appeals.

F. W. Hall and H. N. B. Caradine, for appellant. Colin W. Wright and A. S. Douglas, for respondents.

DODGE, J. (after stating the facts). It is quite apparent, both from the bill of exceptions and from the argument in this court, that this case was so complicated upon the trial as to obscure the very simple ground of action set forth in the complaint, and supported by at least some evidence. That ground of recovery was neither tort, breach of trust, nor money had and received, but was simply that the two defendants promised to obtain for plaintiff from Broderick $112.50, to be applied on the judgments against plaintiff, if he would execute and deliver to Sherron a warranty deed of his share in the land. Plaintiff testified unambiguously to the making of such promise. The performance of the consideration by him and the failure to obtain the money by the defendants was undisputed, as was also the resulting damage to him. If the jury believed his testimony that such promise was made, plaintiff was entitled to recover. If there is any credible evidence to support a contention of fact, a question arises which must be submitted to the jury, although the trial court may be convinced that the preponderance of the evidence is to the contrary. Lewis v. Prien, 98 Wis. 87, 73 N. W. 654; Beyer v. Ins. Co., 112 Wis. 138, 141, 88 N. W. 57. Here, as already stated, there was the testimony of the plaintiff that the defendants did promise, as alleged in the complaint, corroborated by the extreme improbability that he would make a warranty deed of his interest without some understanding that he should be paid therefor. Hence it was error to withhold that question from the jury. The reason given by the trial court, namely, that the evidence failed "to show any trust reposed in the defendants," was not responsive to the situation. The evidence at least tended to prove a promise by the defendants; thus rendering immaterial the reposing of any trust in them otherwise.

Judgment reversed, and cause remanded for a new trial.

GRANT v. KEYSTONE LUMBER CO.

(Supreme Court of Wisconsin. Sept. 29, 1903.)

MASTER AND SERVANT—ASSUMED RISK—FELLOW SERVANTS—CONCURRENT NEGLIGENCE—PROXIMATE CAUSE—QUESTIONS FOR JURY.

1. Plaintiff, engaged as head sawyer, was not required to have anything to do with the gang edger, which was operated some distance back of him. He had never examined the edger, and knew nothing as to its condition at the time he was injured, and never knew of pieces of lumber flying back from it before he was hurt, though he had worked as head sawyer for several seasons. His injury was occasioned by a strip of lumber coming in contact with the edger saws and being thrown back, striking him. *Held* insufficient to show that plaintiff assumed the risk, or was negligent, as it did not appear that he knew, or ought to have known, of the danger to which he was exposed.

2. A head sawyer, operating the carriage of a circular saw, and edger men engaged in managing the saws for edging the lumber, being employed by a common master, and performing duties for the same general purpose, are fellow servants.

3. Evidence in action by a head sawyer for personal injuries *held* insufficient to warrant the legal conclusion that the injury was caused wholly by the negligence of fellow servants.

4. Where a mill employé is struck by a piece of lumber being thrown from the edger saws, if the proximate cause of the injury is the defective condition of the edger saws the employer cannot escape liability because the negligence of fellow servants concurred in causing the injury.

5. Plaintiff was injured by an edger saw in defendant's mill striking a piece of lumber and throwing it back against him. The fingers protecting the saw were defective. The piece which was thrown back belonged to a bunch which was being put through between the saws of the gang edger without having it come in contact with the saws, and such piece became separated and struck the saw. *Held* that, assuming the gang edger was defective, it was a question for the jury whether defendant's negligence in respect thereto was the proximate cause of the injury.

Appeal from Circuit Court, Ashland County; John K. Parish, Judge.

Action by Thomas Grant against the Keystone Lumber Company. From a judgment for defendant, plaintiff appeals. Reversed.

This is an action to recover damages sustained by the plaintiff while in the employ of the defendant as head sawyer in running a circular saw and by being struck by a board thrown against him by an edger situated 57 feet from where he stood at the time he was injured. Issue being joined, and trial had, the court, at the close of the trial, directed a verdict in favor of the defendant. From the judgment entered thereon the plaintiff brings this appeal.

The facts essential to appreciate the questions involved are to the effect that the north end of the defendant's mill extends north to the lake. The plaintiff was a married man, 39 years of age, and had worked as head sawyer in the mill for eight seasons, and in and about the mill much longer. The circular saw at which he was at work at the time was situated in the northwest corner of the mill, and about 40 feet from the north end thereof. That circular saw was used in sawing up logs into lumber, cants, and slabs. As head sawyer the plaintiff's duties consisted in handling levers which controlled the action of the carriage and circular saw. Immediately to the east side and to the rear of the circular saw, and about two feet above the level of the mill floor, was a table in which were a number of live rollers upon

¶ 4. See Master and Servant, vol. 34, Cent. Dig. § 519.

Digitized by Google

which were placed the cants which were thrown from the table by skids—called "kickers"—onto other skids, and were taken from there to the gang saws and manufactured into lumber, and the lumber, boards, and slabs were carried along on such tables south to the front of the mill. The plaintiff's duty required him to stand behind and to the right of the circular saw carriage, with his back toward the double gang edger located at or near the center of the mill, and 57 feet southerly from where the plaintiff stood at the time with his back toward the edger. The gang edger consisted of three parts—a table in front, about 6x10 feet on the surface, and a table in the rear, about 6x8 feet on the surface, and the gang edger between the two tables, wherein are located the saws and other gearing to do the edging. The tables are about 2 feet above the floor of the mill, and they each have three rollers over which the lumber is pushed, and they are both placed close against the edger in the center. This gang edger contains six saws—three on the right side and three on the left side—with a space of about 40 inches between them when the saws are as close together as they can be placed. Each saw is 16 inches in diameter. The two outside saws are so attached to the arbor that they do not move sideways, but the four inside saws are so connected to a lever and are so arranged that they can be moved sideways on the arbor. Each saw is fastened to a collar around the arbor which propels the saws, and they run, when in proper condition, true and perpendicular. The levers connected with those four inside saws extend to the front end of the front table, and are handled and manipulated by three edger men. These levers and saws are so arranged that the boards and lumber put through the edger can be trimmed or edged to any width desired, or passed through without trimming or coming in contact with any saw. This gang edger is 65 inches wide, and has one feed roller in front and two feed rollers in the rear—one directly in front of the other—each of which is 4 inches in diameter. There are two press rollers in the rear, 6½ inches in diameter, each being 28½ inches long, which, with an intervening space of 5½ inches, extend nearly the entire width of the edger. There is a space of 5½ inches between each of the press rollers, and those press rollers are so arranged that they can be raised with levers that have ropes attached thereto which can be pulled down by the edger men, and in doing so will raise the press roller to any height desired. The feed rollers each contain spurs which are calculated to assist in pushing the lumber through the edger. In front of the saws were arranged 12 teeth—each about 14 inches long, to prevent pieces of lumber and edgings from being thrown back by the saws. These teeth are fastened to a rod about 1½ inches in diameter situated above the saws and to the front—being almost directly over the front feed roller, and are supposed to be kept in place by pins placed through the rod, one on each side of each tooth. These teeth extend down toward the saws at an angle of about 25 degrees, to within about half an inch of the bed or level of the edger. The distances between these teeth were from 4¼ to 9½ inches, and they hung loose, so that the points of the teeth moved sideways, causing the distance between the teeth to change. When the mill is in operation, the saws in the gang edger revolve very rapidly. All lumber coming from the gang saws as well as that coming from the circular saw, was put through the gang edger. At the time in question a bunch of lumber coming from the gang saws, which needed no trimming nor edging, was being put through between the saws of the gang edger without any intention of having the same come in contact with the saw on either side. One of the four-inch strips became separated from the bunch lying loose on the rollers, and swung around so that the saw struck it and threw it back and hit the plaintiff and badly injured him.

Victor T. Pierrelee, for appellant. George F. Merrill, for respondent.

CASSODAY, C. J. (after stating the facts). It is said that the trial court directed the verdict in favor of the defendant on the ground that it appears from the undisputed evidence that the plaintiff was guilty of contributory negligence or assumed the risk. The accident occurred about 2 o'clock in the afternoon of April 30, 1902. There is evidence tending to prove that the duties of the plaintiff as such head sawyer did not require him to have anything to do with the operation of the gang edger; that he never worked upon that edger, and had nothing to do with the men running that edger; that his work was different work, and was independent and away from the edger; that when at work his back was toward the edger, and 57 feet away from it; that he knew nothing about the construction of the edger; that he never looked at the edger, particularly, before he was hurt; that he never saw or knew of pieces of lumber or things coming back from the edger before he was hurt; that in going to and coming from his work he went within 25 feet of the edger, and could see the frame and edger when it worked, but never examined it; that he did not know that there were any appliances to keep boards or other things from coming back; that he did not know that the fingers would spread apart, nor how long they were, nor how long they had been out of order. For the purposes of this appeal we must assume such evidence to be true. If it is true, there is no ground for holding that the plaintiff was guilty of contributory negligence, nor that he assumed the risk. Of course, contributory negligence is a want of ordinary care on the part of the party in-

Digitized by Google

jured which contributes to produce the injury. There is nothing to indicate that the plaintiff failed to exercise such care. "It is a general rule that, where unusual dangers are known to the employé, and he voluntarily assumes them, if he is thereby injured, he cannot recover, because of his contributory fault, even though the master at the same time is guilty of negligence, which, without such assumption of risk, would have rendered him liable." Powell v. Ashland Iron & Steel Co., 98 Wis. 36, 73 N. W. 573. Here it does not appear from the undisputed evidence that the plaintiff knew or ought to have known of the danger to which he was thus exposed. "An employé cannot be said, as a matter of law, to have assumed the risk incident to his employment, unless such assumption is shown by undisputed evidence, or is so clearly proven that no reasonable inference can be drawn to the contrary." Revolinsky v. Adams Coal Co. (Wis.) 95 N. W. 122.

2. Counsel for the defendant insists that the plaintiff's injury was the result of the negligence of a co-employé of the plaintiff, and hence that the plaintiff cannot recover. The general rule deducible from the adjudications of this and other courts, as stated by the late Chief Justice Cole, is that: "To constitute fellow servants, it is not necessary that the negligent workman causing the injury and the one injured should both be engaged in the very same particular work. It is sufficient if they are employed by the same master, under the same control, and performing duties and services for the same general purpose." Toner v. C., M. & St. P. Ry. Co., 69 Wis. 198, 31 N. W. 104, 33 N. W. 433, and numerous cases there cited. In a late case it is said that fellow servants are defined as "those engaged in the same common pursuit, under the same general control"—as "persons employed in the same general business by a common employer"; that the question is not "controlled by the fact that different parts of the work necessary to the general enterprise are placed in hands of employés remote from each other, and receiving immediate command from different superiors, or, indeed, one from the other." Okonski v. Pennsylvania & Ohio Fuel Co., 114 Wis. 453, 90 N. W. 429, citing numerous cases. We must hold that the edger men were fellow servants with the plaintiff. The question, therefore, is whether the plaintiff was injured solely by reason of the improper or negligent manner in which the edger men put the boards through between the gang saws. That is necessarily a question of fact. A witness on behalf of the plaintiff testified to the effect that an armful of strips, from 4 to 6 inches wide, which needed no edging, were, at the time of the accident, being merely shoved by the edger men through and over the rollers in the space between the gang saws, which were 40 inches apart; that the top strip, which was white pine, 14 feet long, an inch thick, and 4 inches wide, swung and jerked on the saw, and it came back and swung half across, and when it started to go it was pointed toward the gang saws; but it swung off—half way across—so that it went over and struck the plaintiff; that he thought it was caused by the third finger being badly bent—crooked—because a strip got in between, and there was nothing to hold it; that when there is no finger catching the board it has got to go back; that the fingers play sideways, and lift up when boards are put through; that he was not sure how much of the board had gone in the roller when it began to swing, but he should say about a foot. The edger man who was so putting through the strips at the time testified quite similarly, and also to the effect that there were some spikes in the feed rollers that carried some of these 4-inch strips out, and so this board was only about 2 feet behind the saw when it swung; that it was not heavy enough to go through; that there were no press rollers on it, so when the saw got hold of it it went onto the saw to the side, and he was trying to get the pile through when he saw the board lay there, and he then pulled on the east press roller and shoved on it, but could not make it go, and then he got hold of the long rope, and then the board came before he pulled on it; that the board that went back was on the east side, and laid clear down on the roller; that the other boards were probably 10 inches from this one; that he never counted the fingers or teeth on the shaft, and could not tell how many there were, nor how far they were apart at the top; that they were from 4 to 6 inches apart at the bottom, and they could be spread an inch or so—should say 7 or 8 inches, but he did not think 9 inches; that he did not think there was a finger on the board when it went back; that the fingers were for holding the boards from coming back; that he did not know how the board got by the fingers, but supposed it went between them; that, had a finger gone onto the board, it certainly would have held it, and one would have been on the board if the fingers had not been more than 3 or 4 inches apart. There was other testimony tending to prove that at the time of the injury some of the fingers on the edger were gone from the left-hand side; that the fingers on the edger were loose, and would spread out; that the fingers had been out quite a while—because they were old and rusted and broken off close to the shaft, the breaks being old; that the fingers would spread—one would spread out or bend about 9 inches; that the crooked finger caused the strip to come back; that the edger had been in the same condition for some time prior to the accident; that the fingers should not be more than 4 inches apart; that the fingers in question were very old; that most edgers now have no fingers, but rollers instead; that fingers,

Digitized by Google

properly made, are a complete protection against lumber coming back; that they ought not be more than 2 inches apart; that the saw would shake, because it was worn; that the saws were old, did not run true, and would move, and be wider sometimes than others. In view of such evidence, we cannot say, as a matter of law, from the undisputed evidence, that the injury to the plaintiff was caused wholly by the improper or negligent conduct of the edger men. Craven v. Smith, 89 Wis. 119, 61 N. W. 317.

3. Assuming that the conduct of the edger men was improper or negligent, still the question is presented whether the negligence of the defendant in furnishing defective machinery concurred in producing the injury. It was held by this court several years ago, that: "An employer who has negligently permitted the use of a machine in doing his work, which, by reason of its defects, is unnecessarily dangerous to his employés, is liable for an injury resulting from its use to an employé who was not himself negligent, even though a co-employé was guilty of negligence in managing the machine, and, if it had been carefully handled, the accident would not have occurred." Sherman v. The Menominee River Lumber Co., 72 Wis. 122, 128, 39 N. W. 365, 1 L. R. A. 173, and cases there cited. That case is quite similar in its facts to the case at bar. In that case the plaintiff was injured by a plank thrown by an edger, and the court directed a verdict in favor of the defendant, and one of the defenses was that the injury was caused by the negligence of a co-employé. In a later case it was held that: "Where the injury to a servant is caused by the negligence of the master and that of a fellow servant together, the master is liable therefor." Cowan v. C., M. & St. P. Ry. Co., 80 Wis. 284, 291, 50 N. W. 180. See Jones v. Florence Mining Co., 66 Wis. 268, 28 N. W. 207, 57 Am. Rep. 269. The reason for the rule is that the master is bound to furnish his servants with reasonably safe machinery and appliances with which to work, and a reasonably safe place for doing his work; and, if he fails to do so, he cannot escape liability by delegating such duty to one who in other respects may be a fellow servant of the person injured. Brabbits v. Ry., 38 Wis. 289; Wedgwood v. Ry., 44 Wis. 44, 41 Wis. 478; Bessex v. Ry., 45 Wis. 477; Schultz v. Ry., 48 Wis. 375, 4 N. W. 399; Cadden v. A. S. R. Co., 88 Wis. 409, 60 N. W. 800; Renne v. U. S. L. Co., 107 Wis. 312, 83 N. W. 473; Okonski v. Pennsylvania & Ohio Fuel Co., 114 Wis. 453, 90 N. W. 429. As indicated, there is evidence in the case at bar tending to prove that the gang edger was defective and out of repair in the particulars which have been mentioned. If such defect and want of repair was, by reason of the defendant's negligence, the proximate cause of the plaintiff's injury, then the defendant cannot escape liability by the mere fact that the negligence of the edgermen concurred in causing the injury.

4. Assuming that the gang edger was defective and out of repair in the particulars mentioned, the question recurs whether the defendant was negligent in respect to the same, and, if so, whether such negligence was the proximate cause of the plaintiff's injury. The essential elements of proximate cause have been defined so often and so recently as not to require repetition. Deisenriter v. Kraus-Merkel Malting Co., 97 Wis. 279, 72 N. W. 735; Maitland v. Gilbert Paper Co., 97 Wis. 476, 487, 72 N. W. 1124, 65 Am. St. Rep. 137; McFarlane v. Town of Sullivan, 99 Wis. 361, 363, 364, 74 N. W. 559, 75 N. W. 71; Hudson v. Northern Pacific R. Co., 107 Wis. 620, 624, 83 N. W. 769. The important question is whether the injury to the plaintiff was the natural and probable consequence of the negligence of the defendant, and whether an injury to any person ought to have been foreseen in the light of attending circumstances by persons of ordinary intelligence and prudence. We are constrained to hold that the evidence was sufficient to take the case to the jury on the questions suggested.

The judgment of the circuit court is reversed, and the cause remanded for a new trial.

COLE v. CITY OF WATERTOWN.

(Supreme Court of Wisconsin. Sept. 29, 1903.)

ADMINISTRATION OF ESTATES—APPOINTMENT OF TRUSTEES TO FILL VACANCIES—PROVISIONS OF WILL.

1. Where a will appointing executors and trustees provides that if the persons named, or any of them, shall die or refuse to accept, the vacancy shall be filled by appointment by the county court, "subject to the approval of the parties interested in" the estate, the county court, in case of a vacancy, cannot arbitrarily appoint a person as trustee over the protest of a party interested in the estate, though such person is competent and qualified, the purpose of the provision in the will being to secure persons who would act harmoniously in the performance of their duties as trustees.

2. The provision in a will appointing executors and trustees, that "should any of the persons hereinafter nominated and appointed as executors and trustees, or any of them, die or refuse to accept the trust," the vacancy shall be filled by appointment by the county court, "subject to the approval of the parties interested in" the estate, is not limited to the filling of vacancies caused by the death of or refusal to accept the trust by any of the persons nominated in the will, but is applicable to the filling of all vacancies.

Appeal from Circuit Court, Jefferson County; James J. Dick, Judge.

Proceedings for the appointment of trustees under the will of John W. Cole, deceased, to fill vacancies. From the order of the circuit court affirming the order of the county court appointing Charles R. Blumenfeld as a trustee, Oscar A. Cole appeals. Reversed.

It appears from the record and the findings of the court that John W. Cole died February

Digitized by Google

17, 1894, leaving a last will and testament, which was admitted to probate April 4, 1894, wherein, among other things, he devised to his executors and trustees, therein named, certain real and personal property in trust, with directions as to the management thereof, and to pay the net balance of rents and interest to his wife, Eliza C. Cole, and his son, Oscar A. Cole, as therein directed, and after their deaths to transfer and convey the same to the city of Watertown, in trust for the purposes and on the conditions therein set forth. The will contains this clause: "Should the persons hereinafter nominated and appointed as executors and trustees, or any of them, die, or refuse to accept the trust, the vacancy thus caused shall be filled by appointment by the county court or the judge thereof for Jefferson county, who is hereby authorized and requested to make the same subject to the approval of the parties interested in my estate." The will also contains the following clause: "I do hereby appoint my son, Oscar A. Cole, C. B. Skinner, and Christian May, all of the city of Watertown, executors and trustees of this my last will and testament, with full confidence that they will faithfully and prudently execute the trust hereby reposed in them." Skinner died prior to the death of the testator. April 20, 1894, Christian May refused to accept the trust, and on the same day D. H. Beurhaus and William Humphrey were appointed by the county court as such trustees, in place of Skinner and May, and they, with Oscar A. Cole so appointed, duly qualified as such trustees. July 25, 1900, Humphrey died, and September 11, 1900, Edward F. Wieman was appointed in his place, and he duly qualified. September 28, 1901, D. H. Beurhaus and Edward F. Wieman each filed his resignation in writing, and thereupon the county court made an order fixing November 5, 1901, as the time for making the appointment of two trustees in their places, respectively, and gave notice thereof accordingly. October 28, 1901, the city nominated William D. Sproesser and Charles R. Blumenfeld to be appointed as such trustees; and November 5, 1901, Oscar A. Cole appeared by his attorney, and nominated John Habhegger and William C. Raue to be appointed as such trustees in place of Beurhaus and Wieman, who had so resigned, and Oscar A. Cole then and there expressly objected to the appointment of Charles R. Blumenfeld as such trustee. The county court took the matter under advisement, and on November 16, 1901, entered an order accepting of such resignations, and appointing John Habhegger and Charles R. Blumenfeld as such trustees upon filing a bond of $10,000, to be approved by the county court, and that they within 10 days thereafter gave the bond and qualified pursuant to the order. It was further found by the circuit court that Oscar A. Cole and the city never consulted nor attempted to consult with each other in regard to the appointment of persons to fill such vacancies; that when the matter of such resignations came up to be heard in the county court an attorney appeared for and in behalf of Oscar A. Cole, and no one appeared in behalf of the city; that at the time of the appointment of Blumenfeld he was and still is a fit and proper person to be appointed as one of such trustees; that his character for integrity and business capacity was above reproach, and that he was in all respects fully qualified to act as such; that there was no ill-feeling on the part of Blumenfeld against Oscar A. Cole, and that there was no ground for ill-feeling on the part of Oscar A. Cole against Blumenfeld; that Blumenfeld had done nothing to indicate that he would not act in harmony with the other two trustees, and that there was no ground for believing that he would not. As conclusions of law, the circuit court found that the order of the county court appointing Charles R. Blumenfeld as one of the trustees of said estate was regularly and correctly made in the exercise of the discretionary power of the county court, and that there was no abuse of such discretion in making the order from which Oscar A. Cole had appealed to the circuit court, and that Blumenfeld was lawfully appointed such trustee, and had duly qualified as such, and was entitled to be heard in a direct proceeding before he could be lawfully removed, and ordered judgment affirming the order of the county court. From the judgment entered accordingly, Oscar A. Cole brings this appeal.

Olin & Butler, for appellant. Arthur Mulberger and Harlow Pease, for respondent.

CASSODAY, C. J. (after stating the facts). At the time of entering the order fixing a time for the determination of the matter of the resignations of Beurhaus and Wieman, and the appointment of their successors, the county judge very properly notified the city and Oscar A. Cole in writing of the provision of the will requiring the appointment of two trustees to fill such vacancies, "subject to the approval of the interested parties," and that they were such interested parties, and therein suggested to each of them that they should "agree upon two reliable men to act as trustees" in case such resignations should be accepted, and to propose to the court for such appointment the names of the two persons so agreed upon. No such agreement was ever made, or attempted to be made, and the court finds that the two interested parties never consulted nor attempted to consult in regard to such appointment. Instead of doing so, each party, without consulting the other, proposed the names of two persons, regardless of the likes or dislikes of the other party. The county court appointed one of the two persons so proposed by each party. Habhegger, one of the persons so proposed by Oscar A. Cole, was appointed without any objection. The propriety of his

Digitized by Google

appointment, therefore, is not before us for consideration. On the other hand, Oscar A. Cole, at the time of the hearing, expressly objected to the appointment of Blumenfeld, who had thus been proposed by the city. The question for determination is whether the county court was justified in appointing Blumenfeld against such objection and protest. There is no claim that Blumenfeld is not a man of integrity and character and business capacity, and in all respects qualified to perform the duties of such trustee, but for certain reasons he is said to be objectionable to Oscar A. Cole. The court finds that Blumenfeld has no ill-feeling against Cole, and that Cole has "no ground for ill-feeling" against Blumenfeld. But that is not decisive of the question. Both courts seem to have acted upon the theory that, if each of the parties had the naming of one of the two persons so appointed, then neither could rightfully object to the person named by the other party, provided he was as well qualified as Blumenfeld was found to be. But such is not the purpose of the law. That purpose is not only to secure competent men of integrity, but also those who will co-operate in a friendly and harmonious manner in the transaction of business which may continue for several years. It is not to secure vigilant representatives of the respective parties interested, but those who will work together for the benefit, not merely of one of such parties, but for the whole estate. This is abundantly shown by authorities cited in the brief of counsel for the appellant. In one of them it was held in England many years ago that "the discretion which the court exercises in appointing new trustees is not a mere arbitrary discretion, but is to be exercised in accordance with certain principles. Among them are the following: * * * Secondly. The court will not appoint a person with a view to the interest of some of the cestuis que trustent in opposition to the interest of others. Thirdly. The court will have regard to the question whether the appointment will promote or impede the execution of the trust." In re Tempest, L. R. 1 Ch. App. Cases, 484, decided in 1866. In that case it was said by Lord Justice Turner in behalf of the court: "I think so for this reason: That it is of the essence of the duty of every trustee to hold an even hand between the parties interested under the trust. Every trustee is in duty bound to look to the interests of all, and not of any particular member or class of members of his cestuis que trustent." Id. 488. In speaking of that decision it was said in a later case by that learned Master of the Rolls, Sir George Jessel: "I find also that although as a rule the court of chancery exercises its discretion in the appointment of new trustees—a discretion, I may say, as regards which I respectfully wish to express my cordial assent to what fell from Lord Justice Turner in the case of In re Tempest—yet it is not an arbitrary discretion, but to be applied according to settled rules." Forster v. Abraham, L. R. 17 Equity Cases, 351, 355–6. The testator seems to have had in mind the harmonious co-operation of the executors and trustees; and so the will provides, in effect, that, in case any of the persons therein nominated and appointed as executors and trustees should die or refuse to accept the trust, then the county court was thereby authorized and requested to fill the vacancy by appointment, "subject to the approval of the parties interested in" the estate. In the case of In re Tempest, cited above, one of the trustees died during the life of the testator. By the terms of the will the right to appoint a new trustee was vested in the persons entitled to the surplus rents and profits. They could not agree in the choice of a trustee. On petition the Master of the Rolls appointed one Mr. Petre against the objection of one of the beneficiaries, not from any personal objection, but because he was connected with and proposed by a branch of the family with which the testator was not on friendly terms, and which he had excluded from the management of his property. On appeal the court reversed and set aside such appointment of Petre, and held, in addition to what has been stated, that "in selecting a person for the office (of trustee) the court will have regard to the wishes of the author of the trust, expressed in, or plainly deduced from, the instrument creating it." Id. 484. The learned Lord Justice on that point said: "I think this rule may be safely laid down, because if the author of the trust has in terms declared that a particular person, or a person filling a particular character, should not be a trustee of the instrument, there cannot, as I apprehend, be the least doubt that the court would not appoint to the office a person whose appointment was so prohibited, and I do not think that upon a question of this description any distinction can be drawn between express declarations and demonstrated intention." Id. 487. True, as urged by counsel for the city, the language of the will authorizing and requesting the county court to appoint persons to fill vacancies, if strictly construed, would be limited to the filling of vacancies caused by the death or refusal to accept the trust by one or more of the persons nominated in the will. But, as indicated in the quotation last made, upon questions of this description there is no substantial distinction between the "demonstrated intention" of the testator and an "express declaration" of such intention. In either case the appointment to be made is to be "subject to the approval of the parties interested in" the estate. We are constrained to hold that effect should be given to such intention of the testator fairly deducible from the language of the will. Such ascertainable intention must be enforced. In re Sharland Kemp v. Rozey, L. R. 1896, vol. 1, ch. 517;

Digitized by Google

Adams v. Cowen, 177 U. S. 475, 20 Sup. Ct. 668, 44 L. Ed. 851. Of course, neither of the parties can dictate such appointment, nor contumaciously refuse to agree upon the person to be appointed. The county court has a certain discretion to be exercised in accordance with the principles mentioned, but not arbitrarily and contrary to the expressed wish of the testator.

The judgment of the circuit court is reversed, and the cause is remanded, with direction to reverse that part of the order and judgment of the county court which appointed Charles R. Blumenfeld as one of such trustees, and to remand the case to the county court for further proceedings in accordance with this opinion.

CHICAGO & N. W. RY. CO. v. FOX RIVER ELECTRIC RY. & POWER CO.

(Supreme Court of Wisconsin. Sept. 29, 1903.)

STREET RAILROADS — CONTRACTS — STEAM RAILROAD CROSSING—FLAGMAN'S WAGES—SALE OF PROPERTY—"SUCCESSOR"—USE OF CROSSING—BURDENS ATTACHED TO FEE.

1. Where defendant street railway company purchased from the owner of a previously existing railway all the equipment of such railway, but stipulated that the sale did not include the franchise, leases, contracts, or powerhouse machinery of the seller, the buyer did not thereby become the seller's "successor," within a contract obligating the seller and his successors to pay for the maintenance of a flagman at a steam railroad crossing.

2. Where a street railroad company contracted to pay the wages of a flagman at a point where its line crossed the tracks of a steam railroad, the subsequent purchase of the street railroad's personal property by another company, which thereafter operated the same under an independent franchise, did not render the latter liable for the payment of such wages.

3. The obligation to pay such flagman's wages did not attach to the fee of the land at the crossing over which the street railway was constructed, so as to impose the burden thereof on the railway using the same.

Appeal from Circuit Court, Brown County; Samuel D. Hastings, Judge.

Action by the Chicago & Northwestern Railway Company against the Fox River Electric Railway & Power Company. From a judgment in favor of defendant, plaintiff appeals. Affirmed.

The respondent's street railway crosses appellant's steam railway on Third avenue, in the city of Green Bay. By an ordinance of the common council, on August 24, 1894, one David McCartney was granted a franchise to build a street railway in the city of Ft. Howard, now part of the city of Green Bay. He constructed a street railway, which was operated on the streets specified in this ordinance. Appellant railway company is owner in fee of the land abutting on the street where the street railway crosses the track of the steam railway. On November 5, 1894, a contract was executed, under seal, between McCartney and appellant, in which, among other things, it was agreed: "If at any time hereafter the business of the party of the first part—C. & N. W. Ry. Co.—or the laws of the state of Wisconsin, the ordinances of any municipal corporation of said state, or any other competent authority, or any agreement between the said party of the first part and any municipal corporation of said state, shall make it necessary to station flagmen at said crossing or shall make it necessary or proper to erect crossing signals or gates thereat, or shall require that said crossing be protected by a system of interlocking or derailing switches and signals, or if in the judgment of the party of the first part the safety and convenience of the parties hereto require that said crossing be so protected, in any such case, the party of the first part shall have the right to employ such flagmen or to establish such signals and gates, and the party of the second part will pay all the wages of such flagmen promptly as the same become due from time to time." The contract was made binding upon the heirs, personal representatives, successors, and assigns of the parties. The street railway crossing was constructed after this contract was made. The rails of the steam railway were cut, and the trolley wire crossed over its track and right of way. On or about July 1, 1899, McCartney's executors sold and conveyed to the McCartney Street Railway & Power Company all the rights, franchises, and privileges granted him by ordinances of the city, and also all his or their interest in the rails, poles, ties, wires, cars, right of way, and all other property and interest belonging to the electric railway. October 20, 1899, the McCartney Street Railway & Power Company conveyed, under a sale, to respondent company, all the rails, ties, wire, poles, cars, switches, turnouts, curves, and other personal property constituting the street railway equipment of this railway, excepting and "not including franchises, leases, contracts, or powerhouse machinery." On September 25, 1899, the city of Green Bay granted respondent the right to extend its line on Broadway, formerly Third avenue. March 23, 1900, this action was brought to compel respondent to pay the wages of the flagman at this crossing, under the provisions of this agreement. Respondent operates a trolley railway for carrying passengers. Its tracks cross appellant's tracks on Broadway and Fifth avenue, at the same place on the street where the McCartney Street Railway crossed it when originally constructed. The street existed prior to the time appellant became the owner of the abutting land. Appellant maintained a flagman at this crossing, as required by an ordinance, paying him his wages, which respondent refuses to pay appellant. This action is brought to recover the same.

Edward M. Hyzer, for appellant. Greene, Fairchild, North & Parker, for respondent.

Digitized by Google

SIEBECKER, J. (after stating the facts). The respondent, as purchaser of the property, by contract with the McCartney Street Railway & Power Company of August 21, 1899, and a conveyance of it on October 20, 1899, did not expressly undertake to perform the conditions of the agreement upon which the appellant bases its right to recover in this action. The agreement of sale and the conveyance were, in terms of personal obligations, binding upon the parties only. They express nothing to indicate that the parties intended respondent should be required to pay the expense of a flagman provided for in the original agreement between appellant and David McCartney, the original builder and operator of the street railway. Respondent apparently sought to avoid assuming any of the obligations which were cast upon David McCartney for the maintenance of this crossing. It was specifically agreed that the purchase thus made was to include all the rails, ties, wire, poles, cars, switches, turnouts, curves, and other personal property constituting the equipment of this street railway, but stipulating that the transfer thus made was "not including the franchises, leases, contracts, or powerhouse machinery."

Then, again, the agreement conveys nothing but the personal property therein described. The sale of this personal property to respondent could not transfer any burden, duty, or obligation imposed on McCartney as a party to the contract, unless it assumed such burden, duty, or obligation as assignee.

That respondent was not the assignee sufficiently appears. Can it be said that it was the successor of David McCartney in operating its street railway system over this crossing? This view is met with the unsurmountable objection that McCartney had no valid franchise, nor any right of possession to the street, and that no "franchises, leases, contracts, or powerhouse machinery" were attempted to be transferred and conveyed to respondent. The respondent had a franchise from the city to operate and maintain a street railway over and upon the streets of the city at the place of crossing. The right to possession of the street under its own franchise and to maintain a street railway system is unquestioned. Its purchase of the personal property of the former company in place on the street, using and occupying the same place, while operating its street railway system, under its franchise, is no legal basis for holding it assumed the former owner's right of occupancy in the street at the place of crossing, and thereby had cast upon it the burden of paying the expense of maintaining this crossing. Menasha v. Ry. Co., 52 Wis. 414, 9 N. W. 396; Ry. Co. v. Ham. 114 U. S. 587, 5 Sup. Ct. 1081, 29 L. Ed. 235; Wright v. Ry. Co., 25 Wis. 46.

The appellant asserts that the agreement is one which in legal contemplation must have been intended by the parties to be perpetual, and its benefits attach to the fee of the land over which the street railway is constructed and operated. The contract is primarily concerned as to operating the two railroad properties, where both rightfully pass over this place in a public street. The fact that the steam and street railways occupy the same place on the land emphasizes the legal result that these railways and the land are entirely distinct and independent properties—a transfer of either or both of the railway properties would in no way affect the interest in the land over which they pass, nor would a conveyance of the land necessarily affect their right to the use of this place upon it.

The agreements embraced in the original contract were in their nature personal obligations, pertaining to the conduct of the respective railway enterprises, and did not attempt to grant any rights to the use of the real estate to McCartney which were not an incident to a valid franchise for operating a street railway. The right to use this land at the crossing does not arise out of this contract, nor can it be said that such use by the two railways is an interest in or annexed to the realty, but it is in its effect collateral and independent of the land as regards the tenure and enjoyment thereof. Hartung v. Witte, 59 Wis. 285, 18 N. W. 175; Menasha v. Ry. Co., supra; Ry. Co. v. Ry. Co., 41 Minn. 461, 43 N. W. 329; Wiggins v. Ry. Co., 94 Ill. 83; Morse v. Garner, 1 Strob. 514, 47 Am. Dec. 565.

The foregoing conclusion is based on the assumption that the contract between appellant and David McCartney was valid. This is challenged by respondent. The view we have taken of the case makes it unnecessary to discuss this question. We must hold that the contract in question was not binding on respondent.

The judgment of the circuit court is affirmed.

SCHNEIDER v. KNICKERBOCKER ICE CO. et al.

(Supreme Court of Wisconsin. Sept. 29, 1903.)

RAILROADS—RIGHT OF WAY—ESTABLISHMENT—PRIVATE TRACKS.

1. A railroad company, without having acquired a right of way over certain land belonging to defendant, by surveying the same or establishing a center line thereof, as required by Rev. St. 1898, § 1846, laid down a railroad track, extending its line to a section of land in which plaintiff was interested. Plaintiff thereupon constructed a further extension from such section line to his icehouse. Thereafter the railroad company conveyed its road to another company, which made no claim to that part of the extension on defendant's line, which was thereafter abandoned, and the track torn up. *Held*, that plaintiff had no right to the maintenance of such extension over defendant's land.

Appeal from Waukesha County Court.

Suit by John J. Schneider against the Knickerbocker Ice Company and others. From a judgment in favor of defendants, plaintiff appeals. Affirmed.

Digitized by Google

Action to restrain defendants from removing a spur railway track, constructed by plaintiff, from certain lands where it was connected with the railway system of the defendant railway company to permit the moving of cars from such system to and from plaintiff's icehouse situated some distance from the terminal grounds of such railway company, and to establish his right to have such connection maintained, and to enjoy, by means thereof, the benefits of section 1802, Rev. St. 1898.

There is no bill of exceptions. The findings indicate the issues made by the pleadings and litigated. They are in substance and effect as follows: In and prior to December, 1899, the North Lakes Wisconsin Ice Company owned a tract of land in section 16, town 28, range 17 east, in Waukesha county, Wisconsin, bounded on the westerly side by the west line of such section. During the period mentioned the Milwaukee & Superior Railway Company, without having acquired a right of way over such land, surveyed, laid out and established a center line therefor, traversing the same in an easterly and westerly direction, the easterly terminus being 100 feet east of the westerly boundary thereof, and occupied such right of way with its railway track, and subsequently extended such track, or permitted the same to be done by said ice company for the purpose of accommodating the latter in its business of dealing in ice, so that on December 1st, aforesaid, the westerly end of the track was about 40 feet west of said section line and on section 17. On said day said ice company conveyed to the railway company a right of way on said section 16 describing the same as one 50 feet wide as now located to the terminus of the road. August 14th thereafter plaintiff acquired an undivided half interest in a right of way 50 feet wide for a railway track in said section 17, connecting a place of business to be operated by him with the easterly boundary line of said section where defendant's railway track crossed the same. Subsequently the president and general manager of such railway company caused its track in said section and the westerly 20 feet thereof in section 16 to be removed, believing that portion to be upon lands not acquired by it for right of way purposes. A day or two thereafter said company conveyed its property, including whatever right it possessed to maintain a railway track upon its right of way in said section 16 to the defendant railway company. In September, 1901, plaintiff, at his own expense, constructed a spur track from the terminus of said track east of the line between sections 16 and 17, in a westerly direction to his icehouse in section 17, traversing the right of way in said section 17 of which he was part owner as aforesaid. He connected his track in section 16 with the defendant railway company's track. Immediately thereafter the defendant Knickerbocker Ice Company and the defendant John Field threatened to remove all that portion of plaintiff's track in section 16, and they intended so to do. To prevent such removal this action was commenced. The defendant railway company made no effort to disturb the situation created by plaintiff in any way. Plaintiff, at the time of the commencement of the action, was willing to comply with section 1802 aforesaid, and claimed the benefits thereof, and that he was the owner of a warehouse coming within its provisions, which he was entitled to reach from defendant railway company's track by a spur track connected therewith. Defendant John Field, at the time of the threatened removal as aforesaid, owned the land in section 16 upon which the plaintiff constructed his track, subject to any rights the defendant railway company had therein. He denied that it possessed any such rights, and his position was acquiesced in by said company. Prior to the conveyance to said company its grantor, by the president and general manager thereof promised plaintiff to extend its spur track to an icehouse to be erected by him in section 17, entitling him to enjoy the use of a railway connection between his icehouse and the railway system of such grantee, provided he conveyed the right of way for such track to said grantee and agreed to furnish it with a certain amount of freight; but no such conveyance or agreement was ever made; neither did the defendant railway company, at the time it purchased the property, have any notice of the existence of such promise. The terminus of said company's main line is about one mile from the point in dispute. It is reached by a spur track. Neither said company's yard nor terminal limits reaches to or includes the location of plaintiff's icehouse.

Upon such facts the conclusion was reached that the defendants were entitled to a judgment dismissing the plaintiff's complaint with costs.

J. E. Wildish, for appellant. Ryan, Merton & Newbury, for respondent Knickerbocker Ice Co. C. H. Van Alstine, for respondent Chicago, M. & St. P. R. Co.

MARSHALL, J. (after stating the facts). But one question discussed in the briefs of counsel need be considered in deciding this case. We see no way of escape from the decision of the trial court that the place where appellant insists upon maintaining his track and connecting it with that of the respondent railway company is on premises owned neither by him nor such company, nor in which either owns a right of way. Appellant's counsel concedes, if that decision stands, that the judgment must be affirmed.

It is claimed that the railway company in fact owned a right of way up to the west line of section 16, including the premises in dispute, because it succeeded to the rights of the Milwaukee & Superior Railway Com-

Digitized by Google

pany after such company obtained a conveyance of a right of way for its railroad in said section 16, to the terminus thereof as the right of way was located, a track being then in place to and west of said section line, though the right of way was never surveyed to a point nearer such line than a point about 100 feet east of the same. It is well understood, we may safely say, that the location of a railway right of way, in a legal sense and in the sense the term is ordinarily used in railway parlance, is not accomplished by laying down a railway track, but by surveying and staking out the center line of the right of way for the purpose of building a railway track thereon and operating such track as required by section 1846, Rev. St. 1898. Respondent railway company's grantor never so established or located a right of way including the premises in question, so far as appears by anything in the record. From the circumstances that for the convenience of one of its customers it permitted such customer to extend, or itself extended, its track beyond the terminus fixed by the located right of way, and subsequently conveyed the road, so far as the right of way had been located, it does not necessarily follow that its grantee obtained title to the premises beyond the surveyed right of way. At the time the track east of the west line of section 16 and on the premises in dispute was removed there was certainly legitimate ground for the claim that no railway right of way had been located thereon, in a legal sense, or in the sense the term was used in the deed. In that view its president and general manager having seen fit to abandon the disputed premises and done so, and its grantee, the respondent railway company, never having made any claim thereto, but submitted to the claim of John Field,—conceded to be the owner subject to such rights as such grantee may have therein—that it has no right of way over such premises, a third party circumstanced as plaintiff is cannot be heard successfully to claim to the contrary in order to enable him to enjoy a privilege dependent thereon. It seems quite clear that all parties interested in the title to the land in dispute prior to the claim of the appellant understood that the right of way conveyed to respondent railway company's grantor in section 16 did not extend to the west line of such section, and that with such view John Field was permitted to take and enjoy absolute possession of the premises as owner. Such parties having acquiesced in that construction of the conveyance, and it being a reasonable construction and one which was probably in the minds of the parties when the deed was made, the court cannot otherwise construe it to enable appellant to enjoy a privilege without which he will be a sufferer in respect to his business.

The judgment of the circuit court is affirmed.

BLOOR et al. v. SMITH et al.

(Supreme Court of Wisconsin. Sept. 29, 1903.)

APPEAL—REVERSAL—CONDITIONS—COMPLIANCE—TIME—MANDATE.

1. Where, on a prior appeal from an order denying an application to set aside a judicial sale, the order was reversed, with directions to grant the motion for vacation as to one defendant on her performance of certain conditions indicated within a reasonable time, to be fixed by the circuit court, it was error for the court to refuse to comply with the mandate, and vacate the sale, on the ground that such defendant had not performed the conditions within a reasonable time; no time having been previously fixed by the court within which the conditions should have been performed.

Appeal from Circuit Court, Dodge County; James J. Dick, Judge.

Suit by Fremont Bloor and another, as executors of the estate of John L. Mann, deceased, against Regina Smith, impleaded with Emma Maud Smith. From an order denying a motion of the defendant Emma Maud Smith to enter judgment in conformity with the mandate of the Supreme Court on a previous appeal, she appeals. Reversed.

The nature of the action and the relation of the parties sufficiently appear in the report of this case when here upon the former appeal. Bloor v. Smith, 112 Wis. 340, 354, 8[illegible] N. W. 870. The case was finally determined by this court December 17, 1901, and the mandate of this court was as follows: "By the Court. Both orders appealed from are reversed, and the cause is remanded, with directions to deny plaintiffs' motion for confirmation of the sheriff's sale, and to grant motion of defendant Emma Maud Smith for vacation of the judgment as to her, and leave to answer, upon performance of the conditions indicated within a reasonable time, to be fixed by the circuit court." Id. January 9, 1902, the costs against the plaintiffs on such reversal were taxed at $171.25. After demand they were paid, with interest, February 22, 1902. March 3, 1902, the defendant Emma Maud Smith paid the costs in this court, and thereupon the cause was remitted to the circuit court, and filed therein, and notice thereof given to the plaintiffs March 8, 1902. Nothing further appears to have been done in the case until November 3, 1902, when Emma Maud Smith gave notice to the plaintiffs that upon the remittitur, files, records, and proceedings in the cause, and upon the judgment and mandate of this court, she would move the circuit court December 2, 1902, for the orders directed by the mandate of this court, above quoted. Such motion was finally heard by the circuit court February 10, 1903, and thereafter, and on April 14, 1903, the circuit court made the following order, denying such motion for the reasons therein recited, as follows: "And it appearing to the satisfaction of the court that, in view of the circumstances, the said defendant Emma Maud Smith did not make or notice said motion within a reasonable time

Digitized by Google

after the entry of said judgment of the Supreme Court, or after the payment of the costs of said motion and the filing of the remittitur in this court, and was guilty of gross and unreasonable laches and delay in electing whether or not she would accept the conditions imposed by the Supreme Court to the vacation of said judgment and denial of said motion to confirm, to the injury of the plaintiffs, which said laches and delay have been in no wise excused, on motion of Sawyer & Sawyer, attorneys for the plaintiffs, it is ordered that said motion be, and hereby is, in all things overruled and denied, and that the plaintiffs recover of the defendant Emma Maud Smith ten dollars, costs of this motion." From that order the defendant Emma Maud Smith brings this appeal.

Bohmrich, Maher & Willrich and Sheridan & Wollaeger, for appellant. Sawyer & Sawyer, for respondent.

CASSODAY, C. J. (after stating the facts). Thus it appears from the recitals in the order that the trial court refused to execute the mandate of this court merely because the appellant did not sooner ask the court to do so, or because the appellant did not voluntarily comply with the conditions therein mentioned before the circuit court had fixed a reasonable time within which she must perform such conditions. True, she might have applied to that court to fix such time several months before the time she did. It is equally true that the plaintiffs might have applied to the circuit court to fix such time immediately after the remittitur was filed therein, or any time thereafter. So the court, in obedience of the mandate, might have fixed such time without any application from either party. The delay in making the application is no more the fault of the appellant than of the plaintiffs. The mandate only required the appellant to perform the conditions named "within a reasonable time, to be fixed by the circuit court." In other words, the circuit court was, by the mandate, required to fix such reasonable time before the appellant could be adjudged to be in default for failure to perform such conditions within the time to be so fixed. The conditions to be performed by the appellant in order to entitle her to relief were stated in the opinion of the court on the former appeal in these words: "The terms which should be imposed as condition of the relief to appellant should substantially reimburse plaintiffs the reasonable and necessary expenses incurred in entering the judgment which must be vacated." Bloor v. Smith, 112 Wis. 353, 87 N. W. 874. The items making up the amount are there given. The trial court had no alternative, therefore, but to execute the mandate of this court. This has, in effect, been held in numerous cases. Patten Paper Co. v. Green Bay & Miss. Canal Co., 93 Wis. 283, 66 N. W. 601, 67 N. W. 432. In that case it was held that, "where this court, on reversing a judgment, remands the cause, 'with direction to enter judgment in accordance with the opinion,' and that opinion leaves nothing undetermined, the trial court should merely enter the judgment as directed, and should not allow any amendment to the pleadings or new litigation in the case." See Ean v. C., M. & St. P. R. Co., 101 Wis. 169, 76 N. W. 329; Baines v. City of Janesville, 103 Wis. 103, 79 N. W. 29.

The order of the circuit court is reversed, and the cause is remanded, with direction to execute the mandate of this court, as required on the former appeal, and for further proceedings according to law.

FISHER et al. v. WESTERN UNION TELEGRAPH CO.

(Supreme Court of Wisconsin. Sept. 29, 1903.)

TELEGRAPHS—TRANSMISSION OF MESSAGES—DELIVERY—DELAY—DAMAGES—STATUTES—CONSTRUCTION.

1. Rev. St. 1898, § 1778, provides that any telegraph company within the state shall be liable for all damages occasioned by the negligence of their operators in receiving, copying, transmitting, or delivering messages. *Held*, that such statute did not render telegraph companies liable for damages other than the proximate result of its negligence.

2. Plaintiffs had received a letter from J., offering to sell his tobacco, and wired an acceptance of his offer on condition that J. was to pay for sampling, and asking an answer. J. answered, refusing to pay for sampling. The latter message was not promptly delivered, by reason of which no contract was made with J., who sold the tobacco to others. Plaintiffs claimed that if the message had been promptly delivered, they would have accepted J.'s terms, and purchased the tobacco, and thereby made commissions on the purchase. *Held* that, since the telegram, which was delayed, constituted a purported termination of the negotiations then pending, plaintiffs' loss by reason of a contract which they might subsequently have made was not the proximate result of the delay, and could not be recovered.

Appeal from Circuit Court, Rock County; B. F. Dunwiddie, Judge.

Action by M. C. Fisher and others against the Western Union Telegraph Company. From a judgment in favor of defendant, plaintiffs appeal. Affirmed.

Action to recover damages alleged to have been sustained by breach of duty on the part of defendant in failing to deliver a telegram with reasonable diligence. The complaint was to this effect: Plaintiffs, who were dealers in tobacco at Janesville, Rock County, Wisconsin, on May 24th, 1901, delivered to defendant, a corporation engaged in the telegraph business and having a line for communication between Janesville, Wisconsin, and Westby, Wisconsin, for transmission to A. Johnson, a person having a stock of tobacco for sale at the latter place, a dispatch worded as follows: "Your letter received. Offer accepted. You to pay for sampling by Linde Hamilton. Answer." The dispatch was delivered to Johnson at 2 o'clock p. m.

Digitized by Google

on the day aforesaid. At 7:15 p. m. thereafter, Johnson delivered to defendant at Westby, for transmission to plaintiffs at Janesville, a reply worded as follows: "Will not pay for sampling." It was received at defendant's office in Janesville at 7:40 p. m. after such delivery at Westby. The agent at Janesville who received the same knew at the time thereof that plaintiffs expected a reply from Johnson to the offer for his tobacco and were anxious to be in possession thereof as soon as practicable. Their place of business was but a short distance from the telegraph office in Janesville, and there was easy means of communication between such place of business and such office by telephone. Defendant neglected to deliver the dispatch there till 12:20 p. m. on the third day after it was received as aforesaid. Prior to the sending of the telegram to Johnson plaintiffs, as agents for Samuel L. Johns, of McSherrytown, Adams County, Pa., examined Mr. Johnson's stock of tobacco, which consisted of 923 cases weighing 282,365 pounds, and made an offer for the same, which was subsequently refused, the refusal being accompanied by an offer to sell the stock for 10 cents per pound, marked weights, no pay for cases. When plaintiff's telegram was sent to Johnson and his reply was received at the Janesville office they had authority to accept the tobacco upon the terms mentioned in such reply, and would have done so in time to have secured the same had such reply been delivered to them with reasonable diligence. By the delay in that regard they lost the opportunity to buy the tobacco, and were thereby damaged in the sum of $923 in that by the contract with their principal they would have been entitled to a commission of that amount in case they obtained the tobacco. Plaintiffs filed their claim for damages with defendant 60 days after Johnson's message to them was delivered to defendant's Westby office for transmission.

Defendant answered denying that its agent at Janesville knew when the Johnson message to plaintiffs was received that there was any special importance attached to it; also denied all allegations respecting plaintiffs having been damaged by delay in delivering the telegram, and admitted substantially all other allegations in the complaint.

A finding by the jury was waived. The court found facts as alleged and admitted, and further, in effect, that the telegram to Johnson related to negotiations between plaintiffs and the former for the purchase of tobacco as alleged; that at 9:50 a. m. after Johnson's reply was delivered at the Westby office he sold the tobacco to other parties, and that had plaintiffs obtained the tobacco they would have earned as commission the amount alleged in the complaint, to wit, $923. Evidence to the effect that had plaintiffs seasonably received the reply they would have immediately offered to take the tobacco and paid for the sampling, and that had Johnson received such an offer before he sold to other parties he would have accepted it, was rejected.

Upon the facts found the court concluded as matter of law that the damages claimed by the plaintiffs were too remote to be recovered, and judgment was rendered accordingly.

Geo. G. Sutherland and Fisher & Oestreich, for appellants. A. G. Zimmerman (Rufus B. Smith, of counsel), for respondent.

MARSHALL, J. (after stating the facts). Upon what precise ground the trial court decided this case does not appear. Counsel for the respective parties may have agreed in the presentation of the cause there, as they did here, that the action was for breach of contract, and the decision have been rendered upon the authority of cases holding that the addressee of a telegram, the sender not being his agent nor making a contract for his benefit, must sue for breach of duty constituting actionable negligence or not at all. There is much authority to that effect. Western U. Tel. Co. v. Dubois, 128 Ill. 248, 21 N. E. 4, 15 Am. St. Rep. 109; McPeek v. Western U. Tel. Co., 107 Iowa, 356, 78 N. W. 63, 43 L. R. A. 214, 70 Am. St. Rep. 205; Webbe v. Western U. Tel. Co., 169 Ill. 610, 48 N. E. 670, 61 Am. St. Rep. 207; Curtin v. Western U. Tel. Co., 13 App. Div. 253, 42 N. Y. Supp. 1109; 25 Am. & Eng. Ency. of Law (1st Ed.) 826. Whether it voices the law correctly need not be decided. That will be an important and interesting question for discussion and decision in the event of a cause coming here depending upon its solution. The trial court may have decided the cause wholly upon the ground that the damages claimed were not the proximate result of respondent's breach of duty, since there was neither a contract consummated nor even an advance upon one side in the nature of an offer which by seasonable acceptance would have made a contract, but merely the late delivery of a message rejecting an offer, which left the person sending the same free to treat as he might see fit any subsequent offer made to him.

The idea advanced on behalf of appellants is that, had they known Johnson's attitude in time, they would have submitted thereto and he would have sold them the tobacco, hence that their failure to obtain the property was occasioned by respondent's breach of duty within the meaning of our statute. It is argued that the Legislature, in providing that, "Any person, association or corporation operating or owning any telegraph * * * line doing business in this state shall be liable for all damages occasioned by the failure or negligence of their operators, servants or employees in receiving, copying, transmitting or delivering of dispatches or messages," (section 1778, Rev. St. 1898) in-

Digitized by Google

tended to render the element of proximate relation, in the common law sense, of the damages to the injury complained of, in a case like this, unnecessary. We are unable to subscribe to that view. Such a radical change in the legal relation of parties as that would mean could not properly be read out of a legislative enactment without the language thereof being plain and unmistakable. There are many laws respecting liability for breach of duty on the part of persons and corporations performing quasi-public services, where language similar to that in question is used, the word "occasioned" or some similar word being in place as here, in respect to which it has been held that such word refers to "occasioned" in a legal sense only, not extending beyond the settled rules as to proximate relation of damages to the injury in the law of negligence, requisite to render the same recoverable. The statute requiring the fencing of railroads, as it existed when Curry v. C. & N. W. R. Co., 43 Wis. 665, was decided, made every railway corporation liable for breach of duty thereunder for all damages "occasioned thereby." Nevertheless it was held that the statute did not create a rule of absolute liability; that the word "occasioned" was used with reference to settled rules of legal responsibility for breach of duty constituting actionable negligence. It was decided that the defense of contributory negligence was not taken away by the statute. Subsequently, to accomplish that result a radical change was made in the statute, leaving the legislative will in respect to the matter unmistakable. By section 1339, Rev. St. 1898, towns are made liable for all damages to any person or his property while he is traveling on the highway, caused by reason of any want of sufficiency thereof, yet the doctrine of proximate cause is held to apply to an action to recover under such statute the same as any other action grounded on negligence (Seaver v. Town of Union, 113 Wis. 322, 89 N. W. 163), and the settled rules limiting recoverable damages to the proximate results of the wrong complained of has always applied. McNamara v. Village of Clintonville, 62 Wis. 207, 22 N. W. 472, 51 Am. Rep. 722; Oliver v. La Valle, 36 Wis. 592; Stewart v. Ripon, 38 Wis. 584.

In view of the foregoing it seems quite clear that, under the statute, damages are recoverable even where the action is for breach of contract, and will lie in that form only, not within the contemplation of the parties when their relations were formed, as the probable result of a breach thereof; that is, that the familiar doctrine of Hadley v. Baxendale, 9 Exch. 341, often approved by this court (Cockburn v. Ashland L. Co., 54 Wis. 619, 12 N. W. 49; Guetzkow Brothers Co. v. A. H. Andrews & Co., 92 Wis. 214, 66 N. W. 119, 52 L. R. A. 209, 53 Am. St. Rep. 909), and controlling ordinarily in actions for damages for breach of contract, does not apply regardless of the form of the action; that it has been displaced by the statute. In that light, Hibbard v. Western U. Tel. Co., 33 Wis. 558, 14 Am. Rep. 775, Candee v. Western U. Tel. Co., 34 Wis. 471, 17 Am. Rep. 452, and similar cases, do not apply.

The full scope of the statute has not been defined by any previous decision of this court. The subject was touched upon in Cutts v. Western U. Tel. Co., 71 Wis. 46, 36 N. W. 627. It was there inferentially held, at least, that a telegraph company is liable in case of breach of duty in respect to delivering a telegram for all damages flowing, in a legal sense, from such breach, though the circumstances rendering the same a probable result of such breach were unknown to the company. Hartstein v. Western U. Tel. Co., 89 Wis. 531, 62 N. W. 412, and Summerfield v. Western U. Tel. Co., 87 Wis. 1, 57 N. W. 973, 41 Am. St. Rep. 17, are consistent therewith. In the latter case the court, speaking by Mr. Justice Winslow, said:

"We cannot regard the statute as creating, or intending to create, in any way, new elements of damage. * * * Had a radical change in the law relating to kinds of suffering which should furnish a ground for damages contemplated, the act would have expressed that intention in some unmistakable way. We see nothing in the law to indicate such intention."

The point involved there was whether loss attributable to injured feelings, only, was recoverable. The decision was based upon the doctrine that all injuries causing measurable damages having some proximate relation to the injury can be recovered; that in the absence of any physical injury, by common law rules, there is no such proximate relation and that the Legislature did not intend by the statute to displace that doctrine. We see no reason for departing from that view. Where there is a proximate relation in a common law sense between an injury caused by a failure of duty on the part of a telegraph company in the cases mentioned in the statute, and the injurious results, if there be such, the party damaged is entitled to recover compensation for such results under the statute whether the form of action be on contract or for breach of duty constituting actionable negligence.

The learned counsel for respondent in the course of their argument fell into some confusion by mixing, so to speak, the rule of Hadley v. Baxendale with the doctrine of proximate cause in the law of negligence, and such doctrine with that of proximate relation between an injury and the results in a negligence action necessary to render the same subjects for compensation. The one is quite different from the other. In the former, the wrongdoer must be so circumstanced at the time of the breach of duty as to be chargeable with knowledge that an injury to the person or property of another may

Digitized by Google

probably result from such breach. That element is essential in addition to that of natural and probable consequences of the conduct of the wrongdoer as regards the particular injury, the conduct and consequences being connected, directly or by an unbroken chain of successive events dependent each upon the other. An actionable injury having taken place, the results forming legitimate subjects for compensatory damages are not dependent upon any presumed knowledge or reasonable apprehension on the part of the wrongdoer of the probability of such or any particular results. It is only necessary, as to any particular result, that it shall have been a natural consequence of the injury, having regard to the usual course of nature and of cause and effect in a line of unbroken physical causation. That satisfies fully the essential of proximate relation between damages and injury, though it does not appear that the wrongdoer had any reasonable ground whatever to assume that such results were likely to follow from his conduct. 1 Sutherland, Damages, § 16; Brown v. C. M. & St. P. R. Co., 54 Wis. 342, 354, 11 N. W. 356, 911, 41 Am. Rep. 41; McPeek v. Western U. Tel. Co., 107 Iowa, 356, 78 N. W. 63, 43 L. R. A. 214, 70 Am. St. Rep. 205. It will be seen that, in studying this subject and applying decided cases, to avoid danger of going astray one must distinguish somewhat between the term "result" as applied to the injury and results as applied to the proximate consequences of the injury.

Applying the foregoing to the facts of this case, can it be said that the failure of appellants to purchase Johnson's tobacco was directly caused by respondent's failure to seasonably deliver to appellants Johnson's telegram and that such event came about as a natural, ordinary result of respondent's conduct, by ordinary, natural, unbroken causation? It seems that such proposition must be resolved in favor of respondent. Otherwise we would be led to hold that it would have been in the natural order of things for appellants, had they received Johnson's telegram seasonably after 7:40 p. m. on the day after it arrived at respondent's Janesville office, to have re-opened negotiations with Johnson by making him a new offer eliminating the element which caused the rejection of their first offer, to have done so in time to reach Johnson before he sold the tobacco to other parties, and for him to have accepted the new offer, though he was under no obligation, morally or otherwise, to do so, his telegram being neither in the nature of an offer to appellants nor an invitation to them to continue negotiations. That would be carrying the limits of consequential damages in a legal sense beyond reason and authority. It was within possibilities for events to follow one another in that order to the result suggested, but something more is necessary than mere possibility to constitute the proximate connection between a wrongful injury and the ultimate results rendering it a subject for compensatory damages.

The authorities cited by appellants' counsel come far short of supporting the contention that the damages sought to be recovered here are the proximate result of respondent's negligence. In Thompson v. Western U. Tel. Co., 64 Wis. 531, 25 N. W. 789, 54 Am. Rep. 644, there was a sale of property subject to delivery thereof in time to enable the purchaser to load the same for shipment by rail. By negligence of the telegraph company in transmitting and delivering a message the property did not reach the prospective purchaser in time for him to consummate the trade. The difference between such a situation and the one before us is so obvious that we need not stop to point it out. In Western U. Tel. Co. v. Wilhelm, 48 Neb. 910, 67 N. W. 870, the terms of an exchange of property were agreed upon, but by breach of duty on the part of the telegraph company in transmitting a dispatch calling for the presence of one of the interested parties with an abstract, the agreement was not consummated. In McPeek v. Western U. Tel. Co., 107 Iowa, 356, 78 N. W. 63, 43 L. R. A. 214, 70 Am. St. Rep. 205, we have quite an extreme case. There the court ruled that whether the loss was a proximate result of the breach of duty complained of was a question of fact which, having been solved in the trial court on evidence the solution would not be disturbed on appeal. There, as here, the suit was by the addressee of the telegram. It was said that his right to recover was not based upon breach of contract, but on breach of duty constituting actionable negligence; that the damages in such a case, unlike in one for breach of contract, are not limited to such as might reasonably have been within the contemplation of the parties, but extended to all injurious results flowing from such act by natural sequence, without the interposition of any other negligent act or overpowering force. The plaintiff had laid a plan for the arrest of a fugitive from justice, which would enable him to earn a reward offered for the capture. He arranged for information to be sent him by telegraph of the occurrence of expected events placing the fugitive within his reach. A dispatch giving such information was delivered to the telegraph company, but by delay in its transmission to plaintiff he was unable to consummate his plan of capture. The sending of the dispatch was the final move to enable the plaintiff to proceed to lay his hands upon the fugitive. In such circumstances it was quite clear that it was at least a question of fact as to whether failure to make the capture was not the proximate result of the telegraph company's breach of duty in delaying the transmission of the dispatch.

Here the delayed dispatch was an adverse termination of a negotiation by which plaintiffs sought to obtain Johnson's tobacco. There was no suggestion in it for a continu-

Digitized by Google

ance of negotiations. Nothing was to be effected by the delayed dispatch beneficial to appellants. It can easily be seen that the case of appellants is not within the principle of any of the cases cited. A review of the rest of the authorities relied on would not improve the situation in that regard. In each of the cases specially referred to the breach of duty was in respect to an essential step in an affair the success of which depended upon it. In the one before us the breach of duty was in respect to a closing event in a transaction not calling for or suggesting any further action on the part of either party thereto. Obviously, even if it be true that appellants would have renewed negotiations with Johnson and carried the same on to effect, had they been seasonably informed of the failure of their first effort, it cannot be said that such a course or result would have been in that natural order of things requisite to the proximate relation of damages to breach of duty which is necessary to legal liability therefor.

The judgment is affirmed.

CITY OF WAUSAU v. HEIDEMAN.

(Supreme Court of Wisconsin. Sept. 29, 1903.)

MUNICIPAL CORPORATION—ORDINANCES—CONSTRUCTION—TRANSIENT TRADERS—LICENSES.

1. Wausau City Ordinances, as amended by Laws 1901, p. 477, c. 341, provides that no transient merchant or dealer who shall bring into such city any article of trade or merchandise for the purpose of selling the same from house to house, or who does not intend to become a permanent trader in the city, shall be permitted to sell such goods, by sample or otherwise, without a license. *Held*, that such ordinance did not apply to a traveling salesman taking orders for goods from samples which he did not sell, which orders were sent to the store of his employer in another city, and there filled if accepted, and the goods sent directly to the purchasers.

Appeal from Circuit Court, Marathon County; W. C. Silverthorn, Judge.

Action by the city of Wausau against W. H. Heideman. From a judgment in favor of plaintiff, defendant appeals. Reversed.

Action to recover $125 said to be due from defendant under an ordinance, by reason of defendant, as a transient merchant, trader or dealer, not intending to permanently locate in the plaintiff city, coming into the same and exposing therein for sale by sample, goods, wares and merchandise, notions and articles of trade, soliciting and taking orders therefor, traveling, in so doing, from house to house and place during a period of five days, and thereafter executing the orders obtained. The vital part of the ordinance, reading into it such parts of chapter 341, p. 477, Laws 1901, to which it refers, as are necessary to a full understanding thereof, is this: "No transient merchant, trader or dealer, who shall bring into the city of Wausau any article or articles of trade, goods, wares or merchandise, or notions other than such as are excepted," etc., "for the purpose of selling the same from house to house, and who does not intend to become a permanent merchant, trader or dealer in said city, shall be permitted to sell or expose for sale, barter or exchange by sample or otherwise at retail, or to customers, any such goods, wares, merchandise, notions or articles of trade, within the city of Wausau, without first having obtained a license therefor." A method was prescribed for obtaining a license, the fee therefor being fixed at $25 per day.

The cause was tried by the court. The undisputed evidence was to the effect that defendant, as agent for the T. A. Chapman Company—a corporation conducting a mercantile establishment, permanently located in the city of Milwaukee, and employing traveling agents to solicit orders for merchandise to be filled out of its stock in said city, defendant being one of them.—visited Wausau in the customary way of conducting the business of his principal, and there traveled from house to house taking orders for goods by samples, all orders being subject to acceptance or rejection by the principal at its place of business in Milwaukee, and in case of acceptance the goods to be delivered by the ordinary methods of transportation of such articles, from such city to the city of Wausau, payment for the goods in all cases to be made by the customers direct to the T. A. Chapman Company at Milwaukee. Defendant had no interest whatever in the business conducted by him, except that of a mere employé as aforesaid. He did not deem himself within the ordinance referred to, and therefore did not apply for a license or pay any license fees.

The court found that defendant was a transient trader or dealer within the meaning of the ordinance; that he exposed for sale by sample goods, wares, merchandise, notions and articles of trade, traveling from house to house in doing so, in the city of Wausau; that he took orders for goods to be subsequently delivered thereon, and thereby became a transient dealer or trader; that the business done by defendant did not come within any of the exceptions mentioned in the law, and that as he did not obtain any license for doing the business, or pay any license fee, he was liable to the plaintiff for the fee imposed by its ordinance, of $25 per day, or $125, he having been engaged in his business in the city for five days. Judgment was rendered accordingly.

Edwin S. Mack, for appellant. M. B. Rosenberry (M. A. Hurley, of counsel), for respondent.

MARSHALL, J. (after stating the facts). It will be observed that the judgment is

---

[1] 1. See Hawkers and Peddlers, vol. 25, Cent. Dig. §§ 4, 6.

Digitized by Google

based merely on the fact that appellant, doing the business of an ordinary traveling agent for a mercantile establishment located in the city of Milwaukee, personally solicited orders for goods by sample, to be filled, if accepted, out of the stock of his principal in such city; and that in so doing he traveled from house to house in the respondent city. It was not claimed in the complaint, established by evidence, or found by the court, that appellant brought into such city any other goods than the samples he carried about with him as a mere traveling agent, or that he offered for sale or sold any of such samples or any goods by sample or otherwise. That essential of the ordinance was left wholly uncovered. In that situation it seems that the case of respondent clearly failed to satisfy the calls of the ordinance. Being a penal law, upon familiar principles it must be strictly construed against the respondent if open to construction at all. The learned trial court obviously supposed it was so open, for certainly the mere taking of orders for goods in Wausau, to be filled out of a mercantile stock in Milwaukee, exhibiting samples in so doing, is not within the literal sense of the words, "bring into the city of Wausau any article or articles of trade," etc., and "sell or expose for sale, barter or exchange by sample or otherwise, * * * such goods," etc. Such literal sense plainly covers only selling of goods by sample or otherwise out of a stock of goods brought into the city by the seller and presently therein. To read into the words used the idea that they were aimed at mere traveling men, or agents, taking orders for goods as appellant did, would require not only construction, but construction of a violent character,—one hardly warranted in any case; certainly not in one involving the rights of a person charged under a penal statute.

It is claimed by appellant that one merely taking orders for goods by sample, as in this case, is not a merchant, dealer or trader; that such terms include only persons who buy and sell goods on their own account. There is much force in that proposition. The ordinary meaning of the term "transient dealer or trader" is one who goes from place to place carrying goods for the purpose of selling, trading or dealing in the same, as distinct from one who does the same kind of business without traveling about. That was the view taken of a provision quite similar to the one under discussion in State v. Wells, 69 N. H. 424, 45 Atl. 143, 48 L. R. A. 99, cited by appellant's counsel. It seems clear that the conclusion that appellant was a transient dealer or trader could have been reached by the trial court only by departing from the ordinary meaning of those words. We cannot discover anything in the ordinance, taken as a whole, or taking the same in connection with chapter 341, p. 477, Laws 1901, to which it refers, to warrant such departure. The words seem to have been used by the law-making power in their plain, ordinary sense.

Numerous cases might be referred to where it has been judicially held, either directly or in effect, that a person who, as agent, merely solicits orders for goods for his principal, whether by sample or otherwise, is not a transient merchant, trader or dealer; that such a dealer is one who goes from place to place, taking with him the chattels which he offers for sale or in which he deals or trades, —a person who conducts his business substantially the same as a peddler. As a rule the cases in which the subject is discussed class peddlers as transient dealers or vendors. In Commonwealth v. Farnum, 114 Mass. 267, there was an attempt to charge the accused with peddling without a license. He merely solicited orders for goods by samples, as agent for another. He did not carry goods with him and offer the same for sale or trade, nor did he deal therein. The court held, in effect, that an itinerant trader is one who goes about selling and exposing for sale articles of personal property, not one who goes about merely taking orders for such goods. In Hewson v. Englewood, 55 N. J. Law, 522, 27 Atl. 904, 21 L. R. A. 736, the facts were that one Richardson was a merchant having a permanent place of business in the city of New York. He employed a number of traveling agents to go about soliciting orders to be filled by him out of his stock kept in a store in such city. Hewson was one of such traveling agents. He operated in Englewood, going from house to house. He did not sell any goods, or carry about with him goods for sale. The court held that he was not an itinerant vendor within the meaning of an ordinance of Englewood imposing a license fee upon such persons for the privilege of doing business within its boundaries; that there was nothing in the ordinance precluding a merchant in the city of New York from sending agents into Englewood to take orders for goods, any more than precluding a merchant located within the city of Englewood from conducting his business in the same way. To the same effect are City of Stuart v. Cunningham, 88 Iowa, 191, 55 N. W. 311, 20 L. R. A. 430; Town of Spencer v. Whiting, 68 Iowa, 678, 28 N. W. 13; City of Davenport v. Rice, 75 Iowa, 74, 39 N. W. 191, 9 Am. St. Rep. 454; City of Kansas v. Collins, 34 Kan. 434, 8 Pac. 865; Emmons v. City of Lewistown, 132 Ill. 380, 24 N. E. 58, 8 L. R. A. 328, 22 Am. St. Rep. 540; Village of Cerro Gordo v. Rawlings, 135 Ill. 36, 25 N. E. 1006; Commonwealth v. Eichenberg, 140 Pa. 158, 21 Atl. 258. In the latter case it was directly held that one who travels from place to place soliciting orders for goods to be filled out of a stock of such goods kept in a store permanently located is not a traveling merchant.

From the foregoing we readily deduce the conclusion that to satisfy the calls of the ordinance in question we must have a person temporarily in Wausau, having brought into such city goods of some character for sale,

Digitized by Google

and who travels about in such city exposing for sale, dealing, or trading in such goods.

The further point is made that chapter 341, p. 477, Laws 1901, upon which respondent city depends, is unconstitutional. Since the points already decided dispose of the case, it seems best to leave the constitutional question for consideration in some case depending upon its solution.

The judgment is reversed and the cause remanded with directions to render judgment in favor of the appellant.

BLOHOWAK v. GROCHOSKI.

(Supreme Court of Wisconsin. Sept. 29, 1903.)

NATURAL WATER COURSES—OBSTRUCTION—EVIDENCE—SUFFICIENCY—APPEAL—REVERSAL—NEW TRIAL.

1. The jury's finding in a special verdict must be contrary to the undisputed credible evidence to justify the court in directing a verdict or in changing an affirmative to a negative answer.

2. Water from a swamp flowed over plaintiff's land to a pond on defendant's land, thence into a creek. Plaintiff constructed a ditch to better drain his land, though the water flowed off without it. The ditch contained water for several months in the year. The swamp from which the water came drained into the pond during the whole season, but, the timber having been cut and the land cultivated, the flow of water was not so great. The swamp was the basin of the drainage of a large area. No channel existed from the swamp to the pond, but the water drained into the swamp, and then into the pond, through the ditches constructed by plaintiff. Defendant dammed the outlet to the pond, retarded the natural flow of the water, and damaged plaintiff's land. *Held* sufficient to authorize a finding that there was a natural water course flowing from plaintiff's land to the pond on defendant's land.

3. Under Rev. St. 1898, § 3071, authorizing the court on appeal from a judgment to affirm, reverse, or modify the judgment in part and order a new trial, where the trial court, on defendant's motion, changed a special finding of the jury from an affirmative to a negative answer because contrary to the undisputed evidence, the Supreme Court, on reversing the decision, may remand for a new trial.

Appeal from Circuit Court, Brown County; Samuel D. Hastings, Jr., Judge.

Action by Valentine Blohowak against John Grochoski. From a judgment for defendant, plaintiff appeals. Reversed.

This is an action at law to recover $600 damages for unlawfully and wrongfully filling up an alleged water course, with bed and banks and a well-defined channel through which water flowed during the greater part of the year, immediately below and north of the north line of the plaintiff's premises, described, and thus causing the water to set back upon and overflow the plaintiff's premises. The answer admits that the plaintiff was the owner of the land described, and that the north end thereof adjoined the land of the defendant, but denied the existence of the alleged water course or any water course. At the close of the trial of such issues the jury returned a special verdict, the first question and answer of which are as follows: "(1) Is there a natural water course flowing from the plaintiff's land onto the defendant's land? Answer. Yes." The other questions were answered to the effect (2) that about October 15, 1896, the defendant dammed up said water course so as to cause the water to back up onto the plaintiff's land, (3) and by reason of said back water damaged the plaintiff's lands to the extent of $2 per acre for 15 acres, and for five years, $150. Thereupon the plaintiff moved the court for judgment upon the special verdict, and the defendant moved the court to strike out the answer "Yes" to the first question, and insert in lieu thereof "No," which motion was granted. The court thereupon ordered that the answer of the jury to the first question be changed from "Yes" to "No," as indicated, and that upon the verdict so amended the complaint as amended be dismissed, and that the defendant recover his costs and disbursements in this action, and ordered judgment to be entered accordingly. From the judgment so entered, the plaintiff brings this appeal.

Calkins & McGruer, for appellant. N. J. Monahan, for respondent.

CASSODAY, C. J. (after stating the facts). This is an action at law triable by jury as a matter of right. This being so, the order of the trial court changing the answer of the jury to the first question from the affirmative to the negative can only be sustained on the ground that the finding of the jury was contrary to the undisputed credible evidence. In granting the motion of the defendant to so change the verdict the trial court filed a carefully written opinion, reviewing the evidence, and reached the conclusion that the water complained of was mere surface water, and did not have the essentials of a water course, as defined by the authorities. That court, having heard the witnesses, was, undoubtedly, in a better position to determine the preponderance of the testimony and the weight of the evidence than this court. Had this been an equitable action and the verdict merely advisory, this court would undoubtedly have felt bound by the action of the trial court. The same is true if this case had been tried by the court without a jury. So, even in jury cases, the trial court has a broad discretion in setting aside verdicts, as against the preponderance of the evidence, and granting a new trial. Schillinger v. Town of Verona, 85 Wis. 595, 55 N. W. 1040, and cases there cited; Farley v. C., M. & St. P. Ry. Co., 89 Wis. 206, 61 N. W. 769. But to justify a court in directing a verdict or changing the answer of the jury from the affirmative to the negative, as here, the finding of the jury must be contrary to the undisputed credible evidence. In determining whether such verdict was contrary to the undisputed evidence, the trial court, as well as this court, was bound to consider the evidence in support of the ve-

Digitized by Google

dict in the most favorable light it would legitimately bear. Renne v. U. S. L. Co., 107 Wis. 320, 83 N. W. 473, and cases there cited. So considered, can we say that the evidence in behalf of the plaintiff is insufficient to sustain the finding of the jury? To appreciate the evidence, the general situation should be considered. The plaintiff and defendant each own 80 acres of land, together constituting the W. ½ of the E. ½ of section 13, the plaintiff owning the south 80 and the defendant the north 80. One Jensen owns the 80 immediately east of the plaintiff's land, and on the southeast corner of that 80, and about 40 rods from the plaintiff's land, there is a large willow swamp, extending south onto section 24. That swamp is from 30 to 40 rods wide from east to west, and about 100 rods long from north to south. There is also a small swamp on Rasmussen's land immediately west of the south half of the plaintiff's land. About 40 rods north of the plaintiff's land, and a little west of the east line of the defendant's land, is a small pond, and about 50 rods northwesterly from that there is a still larger pond on the defendant's land. It is conceded that the water from the large swamp drains off westerly and northerly onto the plaintiff's land, and thence onto the defendant's land, and also in a southeasterly direction from the portion of that swamp on section 24. Such is the general situation. It is stated by the trial judge, in effect, that some 25 or 30 years ago that large willow swamp extended northwesterly across the land now owned by the plaintiff, and nearly half way across the defendant's south 40, and to the small pond, and that the water in part from the large willow swamp drained off north into that small pond, and from thence northwesterly into the large pond, mentioned, and from thence north to a creek, and at times it ran off in such quantities and with such rapidity during several months of the year as to form quite a stream between the large pond and the creek; that while the timber was standing and the soil uncultivated the water would stand in the large willow swamp during the greater part of each season, and in very wet seasons the water would drain into and run out of the pond during the whole season; that after the timber was cut from most of the land in the two sections mentioned, and the land became cultivated, except in a few spots where the timber had not been cut, the water was much more absorbed and less water was drained onto the low ground, and the same more quickly disappeared by being drawn off, absorbed, and evaporated; that the result was that, with the exception of one or two acres, the land in section 13, west of the plaintiff's land, became and was fit for cultivation; that the natural drainage of about 900 acres was into the basin constituting the original bed of the big willow swamp; that there never was, however, any channel from the big willow swamp to the small pond, but that the water drained across the plaintiff's land into the swamp, and thence into the small pond through furrows and ditches constructed by the plaintiff; that there are places south and west of the swamp where in times of melting snow and heavy rains the water runs towards and into the swamp in such quantities as to form streams; that furrows or depressions are left through the field for such flow, which are bridged when crossed by the highway; that none of the water flowing into the swamp comes from living springs, but is surface water; that the defendant dammed up the northern end or outlet of the small pond, and thus retarded the natural flow of the water, and damaged the plaintiff's land.

Such is a general summary of the situation as given by the learned trial judge. There is evidence tending to prove that the water came onto the plaintiff's land from surrounding farms, in the first place from rains and snows, and perhaps from springs, and ran all over the flats, and gathered in the middle of the flats in one corner at the plaintiff's north line; that several years ago the plaintiff dug a ditch 3 or 4 feet wide and 1 foot deep to better drain his land, although the water would flow off without it, but not as good; that before the ditch was dug the water ran from the big swamp down onto the plaintiff's land, and over and upon the defendant's land; that the water flows now in the ditch for several months in the year, the same as before the ditch was dug, but faster, and is seldom dry, even in dry weather; that the plaintiff's land is a very little higher than the defendant's land; that the creek flowed all the time between the two ponds; that the water from the swamps emptied into the small pond or swale hole which contained water the year round; that where the water flows from the plaintiff's land onto the defendant's land it is flat—3 or 4 rods wide where it crosses the line; that when the small pond is full the water extends up to the plaintiff's land; the plaintiff's ditch stops at his north line, and from there the water flows north over the flat to the small pond; that there were formerly a creek running from the west onto the plaintiff's land, and also from the southeast onto the plaintiff's land—then about 8 feet wide—with banks and fish in it, which flowed from the plaintiff's land crossing the line near the plaintiff's northeast corner, and that such creek had a bridge across it, but there is no creek there now; that the ground where it was has been plowed and filled up, and there is dirt and stuff where the natural water course was, but down below it was never touched with a plow, because there was water there all the time—water there at the time of the trial—from the defendant's dam up to where it was plowed. Of course, there was much evidence tending to prove that there was no water course, and undoubtedly

Digitized by Google

the trial court regarded such evidence as controlling. But can we say, and was the trial court justified in saying, as a matter of law, that it appears from the undisputed credible evidence that there was no water course flowing from the big swamp to the small pond—from the plaintiff's land onto the defendant's land?

It is sometimes difficult to distinguish between a water course and mere surface water. Much may depend upon soil and other surroundings and conditions. It is well known that certain Western streams—some marked as rivers upon the map—have quite extended sections which for months are perfectly dry. In defining a water course, Chief Justice Dixon said: "There must be a stream usually flowing in a particular direction, though it need not flow continually. It may sometimes be dry. It must flow in a definite channel, having a bed, sides, or banks, and usually discharge itself into some other stream or body of water. It must be something more than a mere surface drainage over the entire face of a tract of land, occasioned by unusual freshets or other extraordinary causes." Hoyt v. The City of Hudson, 27 Wis. 661, 9 Am. Rep. 473. That case was followed in Eulrich v. Richter, 37 Wis. 226, where the facts were quite similar to the case at bar, and where the court directed a verdict. But the judgment was reversed, and a new trial ordered, because "the facts of the case are not so clear and undisputed as to warrant the court in withdrawing from the jury the question whether the locus in quo was a natural water course." Id., 37 Wis. 227, 230. So this court has held, in effect, that streams having their origin in the overflow of a river or other water course, by reason of unusual freshets, although they had no well-defined channels or banks, but spread widely over the intervening ground, were, nevertheless, water courses. Spelman v. Portage, 41 Wis. 144; Barden v. Portage, 79 Wis. 133, 48 N. W. 210. These cases were followed in Case v. Hoffman, 84 Wis. 445, 446; Id., 100 Wis. 323, 75 N. W. 945, 44 L. R. A. 728. It has been held in Indiana that "water which has a definite source in a spring, and takes a definite course, is a water course, which cannot be lawfully diverted from its natural channel so as to injure another's land, although at a certain point it spreads over marshy ground, without a defined channel, where it again flows in such a channel." Mitchell v. Bain, 142 Ind. 605, 42 N. E. 230. "In an action for diverting a brook from the plaintiff's land" in a Massachusetts case, "it appeared that, at a point on the defendant's land below the place of the alleged diversion, the water ceased to flow between defined banks, spread itself out several rods wide, and ran so, over the surface of the ground, for five rods, to the plaintiff's land, across which it spread, and ran for seven rods in like manner, and then began to flow again in a defined channel, which conducted it into a river. Held, that the brook did not cease to be a natural water course on the plaintiff's land, and that he could maintain the action." Macomber v. Godfrey, 108 Mass. 219, 11 Am. Rep. 340. Mr. Gould states the rule applicable thus: "A stream does not cease to be a water course and become mere surface water because at a certain point it spreads over a level meadow several rods in width, and flows for a distance without defined banks before flowing again in a definite channel." Gould on Waters (3d Ed.) § 264, citing numerous cases in support of the text. Quite similar language is used in 28 Am. & Eng. Ency. L. 944, 946. Within the rules of law stated, the evidence is certainly sufficient to authorize a finding that 25 or 30 years ago there was a water course from the big swamp onto the plaintiff's land, and from thence onto the defendant's land, and into the small pond; and, although the flow of water has been much less since the timber has been cut off and the land cultivated, still we are constrained to hold that the credible evidence was sufficient to take the case to the jury on the first question submitted.

The conclusion reached raises a question as to what should be the mandate of this court. Shall it be with direction to enter judgment upon the verdict or for a new trial? The statute declares that "upon an appeal from a judgment" this court "may reverse, affirm, or modify the judgment * * * as to any and all of the parties, and may, if necessary or proper, order a new trial." Section 3071, Rev. St. 1898. This court held several years ago that this power given by statute "to affirm, reverse, or modify a judgment in part, and order a new trial, necessarily confers the power upon this court to order a new trial as to the part of the judgment reversed." Braunsdorf v. Fellner, 76 Wis. 18, 45 N. W. 97. In a late case it is said that, under the power given by that section, the custom of this court "has been generally to apply the law to the facts as they appear to us, and direct the court below as to its judgment or other further proceeding." Hill v. The American Surety Co., 107 Wis. 34, 81 N. W. 1024, 82 N. W. 691. It is there further said, among other things, that "the policy of this court is * * * to remand issues for retrial only when necessary to sure and complete justice, yielding, as every policy must, to the constitutional assurance of the right to trial by jury in certain situations." Id. The motion of the defendant was to strike out the affirmative answer to the first question, and insert in lieu thereof a negative answer. The trial court certainly had the discretionary power to set aside the verdict as against the clear preponderance of the evidence and grant a new trial. This is abundantly shown by cases cited at the beginning of this opinion. But no such motion was made. The finding of the trial court that the verdict of the jury was con-

Digitized by Google

trary to the undisputed evidence, however, makes it certain that in the judgment of that court the verdict should not be allowed to stand. The term at which the cause was tried has passed by, so that the trial court is not now in a position to exercise its discretionary power. To allow the verdict to stand under such circumstances would be doing an injustice to the parties and in disregard of the convictions of the trial court. Under the statute we are convinced that we have the power to order a new trial, and that it is our duty to do so.

The judgment of the circuit court is reversed, and the cause is remanded for a new trial.

RICHARDSON v. BABCOCK.

(Supreme Court of Wisconsin. Sept. 29, 1903.)

BROKERS—COMMISSIONS—EVIDENCE—CONVERSATIONS — WITNESSES — CREDIBILITY — INSTRUCTIONS — GENERAL EXCEPTIONS — APPEAL—REVIEW.

1. Where separate exceptions were not taken to the various sentences of a part of the charge claimed to be erroneous, but one general exception was taken to an entire instruction, the exception will not be sustained if any distinct and independent proposition covered by the instruction is correct.

2. An instruction that, if the jury believe that any witness has willfully and knowingly sworn falsely as to any material matter in issue, they are at liberty to disregard his entire testimony, except so far as corroborated by other credible evidence, is correct.

3. An instruction that the jury are not bound to believe everything a witness has testified to, provided they believe the witness is mistaken or has willfully falsified as to one matter testified to, is misleading, as authorizing them, under such circumstances, to reject his testimony as to other matters.

4. Where, in an action for broker's commissions, plaintiff claimed commissions for sales made to S., and defendant denied any sales to him, and plaintiff testified to a conversation with defendant in which he admitted that S. bought a quarter section, but also stated that defendant was obliged to buy a quarter section with him in order to get S. to buy, and that S. paid $1,200 for his quarter section, but that defendant paid only $300, whereupon plaintiff objected to that way of treating customers, the latter part of the conversation, while remote, related to the same subject-matter in controversy, and was therefore admissible.

Appeal from Circuit Court, Green County; B. F. Dunwiddie, Judge.

Action by F. M. Richardson against J. H. Babcock. From a judgment in favor of plaintiff, defendant appeals. Affirmed.

This is an action by a broker to recover commissions for the sale of land. The plaintiff claims that he procured purchasers for 16 quarter sections of land in South Dakota under a contract with the defendant by which he was to be paid $50 per quarter section for his services, and that the defendant has paid only $211 thereon, leaving a balance of $589 due. The defendant admits that he agreed to pay the plaintiff $50 per quarter section for all lands sold by the plaintiff which belonged to him individually, and that the plaintiff sold three quarter sections of such land, and earned $150 in commissions thereby; but he claims that the balance of the lands sold by the plaintiff were the property of a corporation called the Artesian Land Company, and he denies that he agreed to pay the plaintiff anything for selling said last-named land. The defendant also claims to have paid $275.82 in excess of the commissions earned by the plaintiff, and counterclaims to recover that sum. The action was tried before a jury, the principal question being as to the terms of the contract between the parties. In the course of his charge to the jury the trial judge gave the following instructions: "Your verdict, of course, will be based upon the evidence, and the evidence alone. You must carefully, impartially, and fairly weigh it, and all of it, to the best of your ability, and render such verdict as you find and believe from the evidence should be rendered. In weighing the testimony of the witnesses, you are not bound to believe everything testified to by a witness to be a fact, because the witness so testifies, provided you believe from the evidence in the case, and from all the facts and circumstances proven on the trial, that such witness is mistaken as to some matter testified to, or has knowingly and willfully testified falsely in relation thereto. And if you find and believe from the evidence that any witness has willfully and knowingly sworn falsely on this trial as to any matter or thing material to the issues in this case, then you are at liberty to disregard the entire testimony of such witness, except in so far as such testimony has been corroborated by other credible evidence in the case, or by facts and circumstances proven on the trial." At the close of the general charge the following colloquy between the court and counsel took place: "Court: Did you notice any misstatements in the charge, gentlemen? Mr. Clawson: If the plaintiff recovers, he must recover on a preponderance of the evidence. Court: Yes. (To jury:) The burden of proof is upon the plaintiff to establish the contract as he claims it to be. Mr. Douglas: That is, from the weight of the testimony. Court: Yes; the weight of the testimony, not the number of witnesses." The jury returned a verdict for the plaintiff, with damages assessed at $391.64, and the defendant appeals from judgment thereon.

P. J. Clawson and L. Q. Hardesty, for appellant. A. S. Douglas and H. N. B. Caradine, for respondent.

WINSLOW, J. (after stating the facts). The appellant's principal contention is that that part of the charge of the court relating to the credibility of witnesses, which is quoted in full in the statement of the case,

Digitized by Google

is erroneous. Separate exceptions were not taken to the various sentences of this part of the charge, but one general exception was taken to the whole thereof. In this situation, the rule is familiar that, if any distinct and independent proposition covered by the exception is correct, the exception is unavailing.

The last proposition contained in that part of the charge quoted, to the effect that, if the jury believe that any witness has willfully and knowingly sworn falsely as to any material matter in issue, then they are at liberty to disregard his entire testimony, except so far as corroborated by other credible evidence, is undoubtedly a correct statement of the law. The cases so holding are numerous, beginning with Mercer v. Wright, 3 Wis. 645, and ending with Patnode v. Westenhaver, 114 Wis. 460, 90 N. W. 467. Had a separate exception been preserved to the proposition immediately preceding the sentence just considered, the question whether it could be sustained would be a doubtful one. It must be said that it is unfortunate in its wording, if not positively erroneous, because liable to be wrongfully interpreted. The principle is well settled in this court that if an instruction is so worded that it may reasonably receive two different interpretations, one correct and one incorrect, it must be held erroneous and prejudicial. Small v. Champeny, 102 Wis. 61, 78 N. W. 407, and cases cited at page 68, 102 Wis., and page 409, 78 N. W. Stripped of verbiage, the sentence in question says that the jury are not bound to believe everything a witness testifies to, provided they believe that the witness is mistaken or has willfully falsified as to one matter testified to. Now, if this can only be construed by a reasonable mind to mean simply that the jury may reject the testimony of the witness as to the one matter about which he is mistaken or has falsified, the instruction is correct; but if reasonable men upon the jury might understand from the sentence that, if they believed the witness was mistaken or has falsified as to one matter, then they were at liberty to reject his testimony as to other matters, it is evidently erroneous and misleading. Herein lies the only difficulty with the instruction. As no proper exception has been preserved, we do not decide the question, but we may properly indicate that, if the idea which was in the mind of the court is to be given to the jury, it should be given more clearly, and in language which will admit of no reasonable misconstruction.

Exception was also taken by the defendant to the remarks of the court made during the colloquy between court and counsel at the close of the charge relating to preponderance of evidence and burden of proof. The remarks were strictly correct. Assent was given to the proposition that the plaintiff must recover, if at all, upon the preponderance of evidence, and the further instruction was given that the burden of proof was upon the plaintiff to establish the contract as he claimed it to be by the weight of the testimony. There was no request for any more specific instructions, and hence no error.

An exception was urged to one ruling upon testimony, which must be briefly considered. The plaintiff claimed to have induced one Smock to go to South Dakota to examine the lands, and that Smock had purchased a number of quarter sections as the result of the visit. The defendant denied that plaintiff had sold any lands to Smock. In order to prove his contention that there had been a sale to Smock, the plaintiff testified to a conversation with the defendant in which the defendant admitted that Smock bought a quarter section, but also said that he (defendant) was obliged to buy a quarter section with him to get him to buy, and that Smock paid $1,200 for his quarter section, but that defendant paid only $300 for his, whereupon the plaintiff objected to this way of treating customers. The latter part of the conversation was objected to by the defendant as irrelevant, but the objection was overruled. We find no error in this ruling. The entire conversation related more or less directly to one of the contested questions in the case. While the part objected to was somewhat remote in its bearing, still it was held between the parties, and related to the general subject-matter of the controversy, and hence was properly allowed.

Finally it was objected that the verdict was against the evidence. We have examined the evidence with care, and find it to be sufficient.

Judgment affirmed.

Digitized by Google

TOWN OF SCHOEPKE v. WOLFGRAM.

(Supreme Court of Wisconsin. Sept. 29, 1903.)

HIGHWAYS—JOINT TOWN ROAD—INJURY FROM DEFECT—LIABILITY OF TOWNS.

1. The boards of the towns of S. and G. by order apportioned the parts of a joint town road to be constructed and maintained by each, so that, under Rev. St. 1898, § 1273, each was liable for an accident on the part of the road apportioned to it, due to its omission of duty. *Held*, that Laws 1899, p. 406, c. 244, changing the boundaries of the town of G., and increasing its territory, and providing that the part of the order fixing the liabilities of such towns shall be vacated, and the supervisors thereof shall, before the time for making the next tax roll, make a new order, apportioning their liabilities on account of such highway, did not change the liability for an accident occurring after passage of the act, but before the time for reapportionment of the road, on the part of the road previously apportioned to the town of S.

Appeal from Circuit Court, Oneida County; W. C. Silverthorn, Judge.

Action by Herman Wolfgram against the town of Schoepke. From an order, defendant appeals. Affirmed.

Previous to April 29, 1897, townships 35 and 36 north, of range 11 east, were parts of different towns in Forest county. The town boards of which these townships were parts had laid out and apportioned a joint town road, which was constructed and maintained as apportioned. By chapter 278, p. 547, Laws 1897, which took effect April 29, 1897, township 36 was made part of the town of Gagen, and township 35 was made part of the town of Schoepke, Oneida county. The town of Gagen maintained the west 80 rods of this road, and the town of Schoepke the east 80 rods of this road, as apportioned by the towns in Forest county, when the townships were parts of that county. The east end of the road diverted for a short distance from the town line. During the year 1898 the town of Schoepke reconstructed the east end of the road, building it upon the town line, and closed the old traveled track. This change was completed by January 30, 1899. There was a hole on this new part of the highway, which had been covered with poles by the town authorities when it reconstructed this east end. Respondent alleges that while driving on the highway, this structure gave away, and thereby caused the wheels of his wagon to drop into the hole, throwing him to the ground, and causing the injuries which are the basis of this action. A demand for satisfaction, served on the town of Schoepke, was rejected before this action was brought. All changes prior to the enactment of chapter 244, p. 406, Laws 1899, were ratified by the towns. Chapter 244, p. 406, Laws 1899, increasing the territory of the town of Gagen, went into effect April 26, 1899. The accident occurred on the 5th of May following. The answer alleges that the change of territory by this act terminated the agreement, and, if any liability existed, made the towns of Schoepke and Gagen jointly liable, and prayed for the abatement of the action. Plaintiff demurred to the answer, and asked leave to amend his complaint. The demurrer was sustained, and leave to amend was granted. This is an appeal from the order sustaining the demurrer.

A. W. Shelton and Geo. W. Latta, for appellant. John Barnes, for respondent.

SIEBECKER, J. (after stating the facts). It is insisted in argument that the appellant town is not liable, as alleged in the complaint, because chapter 244, p. 406, Laws 1899, changed the territory of the town of Gagen. It appears by the pleading that the highway in question is upon the line between the appellant town and the town of Gagen. An order was made designating the parts of this highway to be made and kept in repair by each of the two adjoining towns. This order was acquiesced in and acted upon by the towns up to the time of the enactment of chapter 244, p. 406, Laws 1899. By this act the boundaries of the town of Gagen were changed, and its territory increased. The injury complained of is alleged to have occurred on May 5th following, being on the ninth day after the enactment of chapter 244, p. 406, Laws 1899. There is no dispute in the pleadings but that the defect complained of is due to an alleged insufficiency of the highway as constructed by appellant some time prior to the change of territory of the town of Gagen by this legislative act. Under this state of facts, the liability for this insufficiency must be deemed unchanged by the legislation specified. The insufficiency is alleged to be wholly due to the omission of duty of the authorities of the appellant town, imposed upon it under the order of the town board, which assigned to it this part of the highway to construct and keep in a proper state of repair. By this order, made under section 1273, Rev. St. 1898, it follows, that "each such town shall have all the rights and be subject to all the liabilities in relation to the part of such highway to be made or repaired by such town as if wholly located in such town." Appellant's contention that the legislation which went into effect April 26, 1901, abrogated this order of apportionment, and absolved it from the liability charged in the complaint, cannot be approved. To give this legislation such construction would relieve appellant from the consequences of its negligence, incurred prior to the passage of the act. The provision of the statute involved is: "That part of the order fixing their liabilities shall be deemed vacated, and a majority of the supervisors of each of such towns shall, before the time for making the next subsequent tax roll, meet together and make a new order apportioning their liabilities on account of such highway." It is obvious that the time for a reapportionment of this highway by the supervisors

Digitized by Google

of such towns had not yet arrived when the accident occurred. To construe the statute as contended for would, in effect, cast the burden of appellant's default, incurred prior to the time of such legislation, upon the town of Gagen. No such result can be said to have been reasonably contemplated by the statute. It fails, in terms and by implication, to impose such a liability on the town of Gagen; nor does it seem to contemplate a release of the appellant from the consequences of its default in performing a legal duty. The complaint seems definite in charging the insufficiency to be due to defective construction of the highway by the town of Schoepke prior to April 26, 1899.

The order of the circuit court is affirmed.

DUNBAR v. LINDSAY.

(Supreme Court of Wisconsin. Sept. 29, 1903.)

TAXATION—TAX SALES—VOID DEED—NAME OF PURCHASER — RECITALS — EJECTMENT—UNOCCUPIED LAND—EVIDENCE—LIMITATIONS—STATUTES—APPLICATION.

1. Where a tax deed declared that the lands were sold to the grantee, and another recital stated that the certificates on which the deed was based were assigned to plaintiff, the deed was void on its face for failure to state the name of the purchaser at the tax sale.

2. Under the express provisions of Rev. St. 1898, § 1189a, as amended by Laws 1899, p. 652, c. 351, § 21, providing that an action of ejectment shall not be brought to recover lands conveyed by a tax deed void on its face, after nine months from the time of recording such deed, such limitation does not apply where the original owner redeemed the land from the taxes levied after the recording of the deed.

3. Where, in an action to recover land sold for taxes, the complaint alleged that defendant was in possession, and the answer admitted such possession since the recording of the tax deed, evidence tending to show that the land was vacant and unoccupied was inadmissible.

4. The original owner of vacant unoccupied land is entitled to maintain ejectment against a claimant under a void tax deed.

Appeal from Circuit Court, Vilas County; W. C. Silverthorn, Judge.

Action by C. F. Dunbar against William Lindsay. From a judgment in favor of plaintiff, defendant appeals. Affirmed.

This is an action of ejectment. The complaint was in the usual form. The answer denied plaintiff's ownership of the land in question, and also any unlawful holding thereof by the defendant. The answer further set up ownership by the defendant by virtue of a tax deed executed and recorded May 3, 1893, and alleged that more than three years had elapsed since the recording of the deed before the commencement of this action. The answer also alleged payment of taxes by the defendant for the years 1896 to 1901, inclusive, and that the defendant had been in undisputed and continuous possession of the property in question since the recording of the tax deed. Upon the trial before a jury the plaintiff proved record title in himself and rested. Thereupon the defendant offered in evidence a tax deed describing the property in question, a copy of which is as follows: "To all to whom these presents shall come, greeting: Whereas, William Lindsay of Milwaukee, Wisconsin, has deposited in the office of the county clerk of the county of Vilas, in the state of Wisconsin, seven certificates of the county treasurer of the said county, whereby it appears as the fact is, that the following described piece or parcel of land lying and being situated in the county of Vilas, to wit [description of lands], were, for the nonpayment of taxes, sold by the county treasurer of said county at public auction at his office in Eagle River, in the county of Vilas, on the 21st day of May, in the year of our Lord one thousand eight hundred and ninety-five, to the said William Lindsay for the sum of $45.83 in the whole, which sum was the amount of taxes assessed and due and unpaid on such tract of land, together with the costs and charges of such sale due therewith at the time of making such sale, the whole of which sum of money has been paid by the aforesaid purchaser, and whereas, it further appears, as the fact is, that the owners or claimants of said lands have not redeemed from said sale the lands which were sold as aforesaid and said lands are now unredeemed from such sale, whereby said described lands have become forfeited and the said purchaser or his assigns are entitled to a conveyance thereof, and whereas, it appears as the fact is, that the aforesaid certificates have been duly assigned by the said —— to the said William Lindsay: Now, therefore, know all men by these presents, that the county of Vilas in said state and the state of Wisconsin, in consideration of the said money aforesaid and in the premises and in conformity to law, hath given and hereby doth give, grant and convey the said tracts of land above described, together with the hereditaments and appurtenances, to the said Wm. Lindsay, and to his heirs and assigns, to their sole use and benefit forever. In testimony whereof, I, John Radcliff, deputy county clerk of the said county of Vilas, have executed this deed pursuant to and in virtue of the authority in me vested by the statutes of the state of Wisconsin, and for and on behalf of the said state and county of Vilas aforesaid, and have hereunto subscribed my name officially and affixed the seal of the said Vilas county at Eagle River in said county of Vilas this 23d day of May, in the year of our Lord one thousand eight hundred and ninety-eight. [Signed] B. F. Hammond, County Clerk of Vilas County, Wis. [County Seal.] By John Radcliff, Deputy. Done in presence of D. E. Riordan, George E. O'Connor." Acknowledged and duly recorded May 23, 1898. The defendant also proved the payment of taxes upon the land for a number of years, and offered other evidence, which is not material to the questions raised upon this appeal. At the close of the evidence the cir-

¶ 4. See Ejectment, vol. 17, Cent. Dig. § 75.

Digitized by Google

cuit judge directed the jury to return a verdict in favor of the plaintiff, and afterwards made an order requiring the plaintiff to deposit in court the amount of taxes paid by the defendant, with interest, which having been done, judgment was entered in favor of the plaintiff, with costs, and from this judgment the defendant appeals.

J. E. Wildish, for appellant. Sanborn & Sanborn, for respondent.

WINSLOW, J. (after stating the facts). The circuit judge rightly held the defendant's tax deed void on its face. By one recital the tax deed declares that the lands were sold to the plaintiff, and by another recital that the certificates were assigned to the plaintiff. Thus it appears that it cannot be ascertained from the face of the deed to whom the lands were sold; in other words, it fails to state the name of the purchaser at the tax sale. This defect has always been held to render the deed void. North v. Wendell, 22 Wis. 431; Eaton v. Lyman, 33 Wis. 34; Hunt v. Stinson, 101 Wis. 556, 77 N. W. 901.

The appellant claims that if the tax deed be void the action was barred by section 1189a, Rev. St. 1898, as amended by section 21, c. 351, p. 652, Laws 1899. This claim, however, cannot prevail, because it appears that the respondent (the original owner) on the 27th day of November, 1899, duly redeemed the lands in question from the taxes for the years 1897 and 1898; hence, under the proviso in the section cited, it does not apply.

Another claim was made by appellant for the first time in this court, namely, that if the tax deed be void on its face it did not confer constructive possession upon the tax title claimant; that the evidence showed that the lands were at all times vacant and unoccupied, and hence that ejectment could not be maintained against the tax title claimant, because he had never been either in actual or constructive possession of the premises. In support of this contention Cutler v. Hurlbut, 29 Wis. 152, is relied upon. There are at least two sufficient answers to this contention: First. It is alleged in the complaint that the defendant is in possession of the premises, and the answer states that the defendant has been in undisputed and continuous possession since the recording of his tax deed, and has made improvements thereon. Thus the fact of defendant's actual possession is established by the pleadings, which have never been amended. The evidence showing that the lands were vacant was all given under the plaintiff's objection, and was clearly inadmissible to controvert a fact which stood admitted by the pleadings. Second. The case of Cutler v. Hurlbut does not hold that ejectment may not be maintained by the original owner against a claimant under a void tax deed where the lands are vacant, but rather the reverse. That case was an action of ejectment by the original owner against a tax title claimant whose deed omitted the words "as the fact is" in the various recitals. The trial court directed a verdict for the defendant, and refused to instruct, as requested by the plaintiff, to the effect that if neither the grantee nor his assigns entered into actual possession of the premises within three years after the tax deed was recorded, and had not been in actual possession for ten years before the commencement of the action, the verdict must be for the plaintiff. Upon appeal to this court there was a division of opinion as to the rights of the parties under the deed. All of the justices were of opinion that if the tax deed was void the instruction refused should have been given. Justice Lyon was of opinion that the tax deed was valid, and hence the verdict was properly directed for the defendant. Chief Justice Dixon and Justice Cole were of opinion that the tax deed was void, but the Chief Justice thought the judgment should be affirmed, because the bill of exceptions did not purport to contain all of the evidence, and hence no affirmative error was shown in the order directing a verdict. Justice Cole dissented from the judgment, being evidently of the opinion that the case should be reversed for failure to give the instruction mentioned above. Thus it is evident that upon the point now raised the court in effect held that ejectment could be maintained against a tax title claimant under a void tax deed who had not had actual possession. We see no reason to change the rule there impliedly, if not expressly, adopted.

Judgment affirmed.

NATIONAL CASH REGISTER CO. v. BONNEVILLE.

(Supreme Court of Wisconsin. Sept. 29, 1903.)

REPLEVIN—TITLE TO PROPERTY—PAYMENT—INSTRUCTIONS—SUFFICIENCY OF VERDICT—MOTION TO DIRECT VERDICT—WAIVER OF JURY.

1. In replevin of a machine, on which credit was allowed for the price of a former machine, shipped to defendant on request of a third person, plaintiff claimed the allowance of the credit was made on the representation of defendant that the price of the former machine had been paid, which was alleged to be false. The parties understood that such third person was to pay plaintiff for the machine. Defendant had an open account with such third person, and the machine was to be charged to him. Payments had been made on the open account sufficient to cover the machine item. *Held* to warrant a finding that defendant's representation that he had paid for the old machine was true.

2. Defendant having agreed with such third person that the old machine might be charged to him, plaintiff could not claim that, as he did not retain it, he did not owe for it, and the payments made on account should be applied to the other items of the account, as such claim could only be made by defendant.

3. A motion by both parties for the direction of a verdict is not a waiver of a decision by the jury on questions of fact, requiring the court to decide the facts.

Digitized by Google

4. In replevin of a machine, on which a credit was allowed for the price of a former machine, an assumption by the court that the old machine was shipped to defendant by a third person was harmless, when, in the same connection, it was stated the machine was shipped direct by plaintiff.

5. Where, in replevin of a machine, plaintiff claimed a credit was allowed of an old machine on a false representation that it had been paid for, and the jury were instructed that they could find the defendant entitled to possession only by finding that he had paid for the machine, it was immaterial that the jury having so found did not expressly determine the ownership.

Error to Circuit Court, Taylor County; John K. Parish, Judge.

Action by the National Cash Register Company against A. Bonneville. From a judgment for defendant, plaintiff brings error. Affirmed.

Action of replevin for a cash register sold by plaintiff to defendant at an agreed price of $200, upon which credit was allowed for the price of a former cash register, shipped to the defendant by the plaintiff at the request of one William Werder, the price whereof was supposed to have been sent by Werder to the plaintiff. The balance of $135 was to be paid in certain specified installments, and the title to remain in the plaintiff until completed payment. Such sum was paid, as agreed. Plaintiff claimed that the allowance of credit for the former machine was made upon the representation of the defendant that the price of the same had been paid, which was alleged to be false. Defendant denied any such representation, and offered proof that he had paid the price thereof to Werder. The case was submitted to the jury, with instructions that they could find for the defendant only by finding that the defendant had paid the full price to the person entitled to receive the same. The jury found a verdict in favor of the defendant, upon which judgment was entered, to which the plaintiff sued out writ of error.

John B. Hagarty, for plaintiff in error. Clinton Textor, for defendant in error.

DODGE, J. (after stating the facts). The principal contention is that there was no evidence that defendant had paid the price of the first machine, closely associated with which is the claim that the evidence offered to establish that fact was inadmissible. That evidence consisted in defendant's own testimony that Werder, from whom he was purchasing goods, and with whom he had an open account, ordered this machine to be sent to defendant, and charged it in the open account; that thereafter defendant went on paying upon this open account, which was increased by subsequent purchases, and had paid largely in excess of all that was charged thereon, up to and including the charge for this original cash register. If it be assumed that Werder was the person to whom defendant was to make payment for this first machine (a fact which apparently was assumed by all parties upon the trial, and which is warranted by a recitation in the written contract, indicating that all parties understood that Werder, and not the defendant, was the person to pay plaintiff), we are of opinion that these contentions of the appellant must be overruled. If by express or tacit consent two parties agree to the entry upon a mutual account between them of a charge against one, and that one proceeds and makes payments in amounts sufficient to cover that item, together with all preceding ones, it constitutes payment of that item, at least as against protest by any third party. It is urged by the appellant that since defendant did not accept and retain the old machine, he did not owe for it, and therefore any payments which he made to Werder on account must be applied to other items in that account; but this is a contention which only the defendant himself could make. If he was willing that, as between him and Werder, this first machine be charged to him, the appellant cannot be heard to object. Such testimony, then, being admissible, of course tended to prove the fact of payment, and if believed by the jury, warranted them in finding that the defendant's representation that he had paid the purchase price was true. In this connection it is urged that, inasmuch as both plaintiff and defendant moved for the direction of a verdict, the parties waived a decision by the jury upon all questions of fact, and consented that the court should pass upon them; whence it is claimed that the court should have considered where was the preponderance of the evidence upon this and other questions, and decided the facts without submission to the jury. That rule of practice, which maintains in New York, has been entirely repudiated in this state some years since; long enough, it would seem, for the profession to have ascertained the fact, and to refrain from repeated citation of the New York authorities on the subject. Thompson v. Brennan, 104 Wis. 564, 80 N. W. 947.

A criticism of the charge based upon the assumption that the court assumed that the first cash register was sent to the defendant by Werder is obviously unfounded. The statement made by the court is perhaps a trifle ambiguous, but clearly, in the light of the record, was that the purchase price was claimed to have been sent to the plaintiff by Werder; which is a correct exposition of the recitation of the contract. In any event, it is wholly immaterial, and could have worked no prejudice, for in immediate connection the court points out that the register itself was shipped direct to the defendant by the plaintiff.

Further complaint is made that the jury did not, by their verdict, expressly determine the ownership of the replevied register. The verdict was to the effect, among other things, that the defendant was entitled to

Digitized by Google

possession, and that the plaintiff unjustly took and detained the same. The jury were instructed that they could reach this verdict only by finding that defendant had fully paid for the register, so that they must be presumed to have found this fact; which, being found, left no question of fact as to the title. Confessedly, if the property was paid for, it belonged to the defendant. If it was not paid for, the plaintiff had a special interest therein. There was no occasion for the jury to go further than to find the facts, to which the court might apply the law.

We find no other assignments of error worthy of discussion. Judgment affirmed.

WILKINSON v. UNITED STATES FIDELITY & GUARANTY CO.

(Supreme Court of Wisconsin. Sept. 29, 1903.)

GARNISHMENT — DISCONTINUANCE — UNDERTAKINGS—FRAUD—LIABILITY OF SURETIES—ACTIONS — QUESTIONING INDEBTEDNESS — PLEADING—PROOF OF PAYMENT.

1. In an action on a bond given on discontinuance of a garnishment, an answer alleging no knowledge or information sufficient to form a belief whether the judgment had been paid is not sufficient to entitle defendant to the benefits of a plea of payment.

2. Where defendant enters into an undertaking to procure a discontinuance of a garnishment, in an action on the undertaking against the surety fraud of defendant in procuring the undertaking cannot affect plaintiff, in the absence of his participating therein or any notice as to the fraudulent conduct.

3. Under Rev. St. 1898, § 2771, authorizing the discontinuance of garnishment proceedings on the filing of an undertaking to pay the judgment recovered, the defendant and the sureties executing the bond cannot question, in an action thereon, whether anything was due from the garnishee to the defendant.

Appeal from Circuit Court, Ashland County; John K. Parish, Judge.

Action by George Wilkinson against the United States Fidelity & Guaranty Company. From a judgment for plaintiff, defendant appeals. Affirmed.

The respondent brought action against one W. F. Pleas, garnishing W. H. Gilbert. W. F. Pleas, as defendant in the action, applied to the court for an order for the release of the garnishment, under section 2771, Rev. St. 1898. The court ordered that an undertaking might be filed with the clerk to the effect that the sureties would pay on demand to the respondent, the amount of the judgment that might be recovered against W. F. Pleas, with all costs, not exceeding the sum of $4,000. The judgment debtor, W. F. Pleas, procured the undertaking in question from appellant, whereby it undertook to pay respondent on demand the amount of the judgment, with all costs that might be recovered against W. F. Pleas, not exceeding the sum of $4,000. Respondent recovered judgment against W. F. Pleas in the sum of $9,440.33, and on the refusal of appellant to pay the $4,000 this action was brought to collect the amount of the undertaking. Appellant alleges that W. F. Pleas obtained the undertaking by falsely representing his financial standing; that it was filed without its knowledge or consent, and was without consideration; and that it was not liable because the garnishee was not indebted to and did not have property under his control belonging to W. F. Pleas when the garnishment process was served. Judgment was ordered upon the pleadings in the sum of $4,000, with costs of $100.32. The appeal is from this judgment.

Ben S. Smith, for appellant. Tomkins & Tomkins, for respondent.

SIEBECKER, J. (after stating the facts). The appellant asserts that the court erred in not requiring respondent to prove that the original judgment remained unpaid. The answer admits that judgment was recovered by the respondent in the original suit, wherein the undertaking sued on in this action was given as alleged in the complaint, but alleges no knowledge or information sufficient to form a belief "whether the same or any part thereof has been paid or not." The allegation of the answer is not sufficient to entitle him to the benefits of the plea of payment; it amounts to no more than a general denial, under which proof of payment cannot be received. Martin v. Pugh, 23 Wis. 184; Hawes v. Woolcock, 30 Wis. 213; Rossiter v. Schultz, 62 Wis. 655, 22 N. W. 839; Meating v. Tigerton Lumber Co., 113 Wis. 379, 89 N. W. 152.

Appellant alleges fraud on the part of the defendant in procuring the undertaking sued on, but makes no claim that respondent in any way participated in perpetrating such alleged fraud. We are unable to perceive how respondent can be affected in his legal right by fraudulent conduct of the defendant in procuring a dissolution of the garnishment proceeding of which he had no notice or knowledge to put him on inquiry as to the alleged fraudulent conduct. It was incumbent on appellant to protect itself from any deception by the defendant, and if it was induced to give the undertaking by his fraudulent conduct then it must suffer the injury; for the law demands that he who deals with and trusts another, and thereby suffers an injury, should be the loser rather than a stranger.

It is further contended that it was error on the part of the trial court not to permit the defendant to show that the garnishee did not owe the defendant, judgment debtor, anything at the time the undertaking was given. Section 2771, Rev. St. 1898, provides that "the defendant may, at any time, after the commencement of the action, and before judgment, file with the clerk of the court an undertaking executed by at least two sureties, * * * to the effect that they will,

---

2. See Principal and Surety, vol. 40, Cent. Dig. § 81.

Digitized by Google

on demand, pay to the plaintiff the amount of the judgment with all costs that may be recovered against such defendant in the action," etc., and that "thereafter the garnishee shall be discharged and the garnishment proceeding shall be discontinued," etc.

When the defendant in the original action elected to give the undertaking under this statute, which supersedes the garnishment proceeding, he waived all right to an investigation of any issue in that proceeding, and is thereby estopped from a trial of the question whether anything was due at the time of the garnishment. Thoen v. Harnstrom, 98 Wis. 231, 73 N. W. 1011; Greengard v. Fretz, 64 Minn. 10, 65 N. W. 949.

The purpose of the statute is to afford the defendant an opportunity to release his property in the hands of the garnishee, and substitute an undertaking, with sureties, in place of the property impounded by the proceeding. This proceeding being discontinued, and the sureties having undertaken to pay in place of the judgment debtor, they must be held to stand in the same position, and be estopped from denying that the garnishee was in any way liable to the defendant. The statute is like that allowing bonds to be given to release the property where attachments have issued, which are conditioned for the payment of judgments obtained against defendants. In such cases the liability of the surety becomes absolute when judgment is rendered against the defendant for whose benefit the bond was executed. Dierolf v. Winterfield, 24 Wis. 143; Billingsley v. Harris, 79 Wis. 103, 48 N. W. 108.

The judgment of the circuit court is affirmed.

BUTLER v. DAVIS.

(Supreme Court of Wisconsin. Sept. 29, 1903.)

WORK AND LABOR—IMPLIED WARRANTIES—AGENTS—AUTHORITY—BOARD OF WORKMAN.

1. Where a witness had testified to a certain fact on direct examination, and her statement was not stricken out, that her statement with reference to the same fact on cross-examination was stricken out on objection was without prejudice.

2. Where there was no evidence that plaintiff's wife had any authority to make any agreement on behalf of her husband to make a well which he had drilled for plaintiff "all right," or that she had ever assumed to act as his agent except to keep his accounts and collect his bills, a statement made by her to defendant, on her receiving a part of the consideration for the well, that her husband would make the well all right, was not binding on the husband.

3. In a contract for drilling a well there is no implied warranty on the part of the driller that water will be obtained, or that the well will be a success as to the quantity or quality of the water obtained, but only that the work shall be done in a workmanlike manner and with ordinary skill.

4. Where defendant agreed to board plaintiff and his helper while they were drilling a well for him, and the only conversation with reference to the time it was expected the work would consume was that plaintiff "thought it would take three or four weeks," defendant was not entitled to recover for board so furnished after the time so stated.

Appeal from Waukesha County Court; M. S. Griswold, Judge.

Action by Charles Butler against Joseph Davis. From a judgment in favor of plaintiff, defendant appeals. Affirmed.

This is an action to recover for services and materials furnished in drilling a well. The plaintiff claimed in his complaint that on November 25, 1901, he contracted with the defendant to drill a well upon the defendant's farm at the price of $1 per foot for drilling and 65 cents per foot for casing, and that under this contract he drilled 242 feet, and put in the same amount of casing, on which contract $175 was paid February 11, 1902; that on April 14, 1902, the parties made another agreement, by which the plaintiff was to drill the well deeper at the same rates as under the former contract, and that the plaintiff thereupon drilled 86 feet further, and put in 73 feet of additional casing, no part of which has been paid for; that plaintiff also sold the defendant certain pump fittings amounting in all to $28.35 in value, no part of which has been paid. The answer of the defendant admitted the making of the contract with the plaintiff in November, 1901, by which plaintiff was to drill a well on defendant's farm at the price of $1 per foot and the reasonable value of the casing and pump fittings furnished, and that by the terms of said contract the plaintiff agreed that he would obtain a sufficient supply of water for the defendant's household and stock and all farm purposes, and put in a pump and attach it to a windmill on the premises, and leave the well in proper condition to furnish such sufficient supply of water. The answer further alleged that the plaintiff represented to the defendant that he could get water sufficient for the defendant's needs at from 20 to 30 feet, and that he would complete the well in not more than eight or ten days. The answer admits that it was a part of the agreement that the defendant would board the plaintiff and his helper and his team while the well was being dug. The answer further alleged that the plaintiff commenced work about November 12, 1901, and continued to drill until February 11, 1902, and put in a pump into the well, and attached it to the windmill, and informed the defendant that the well was complete, and that there was a sufficient supply of water, upon the faith of which statement the defendant paid the plaintiff $175, the plaintiff agreeing to make the well all right if it was not so; that as matter of fact the supply of water was wholly inadequate, and in a few days failed entirely, and plaintiff again came to the farm about April 14, 1902, and continued to drill until about May 29, 1902, when he again

¶ 3. See Contracts, vol. 11, Cent. Dig. § 872.

Digitized by Google

in the pump and attached it to the windmill, and informed the defendant that there was a sufficient supply of water; that as matter of fact there was not a sufficient supply of water, and that said well has never been completed, and is of no value; that the work was done in a careless and unworkmanlike manner. The answer also contained a counterclaim by which the defendant sought to recover of the plaintiff the value of the board furnished to the plaintiff and his man and team for 17 weeks; also the value of services in hauling water from the river during such time, and the value of fuel used by plaintiff in running his engine, as well as the sum of $175 paid by the defendant to the plaintiff—amounting in all to the sum of $461. The plaintiff replied to the counterclaim, in substance denying its allegations. The action was tried before a jury, and a verdict for the plaintiff was rendered, with damages at the sum of $388.70, upon which judgment was entered for the plaintiff, with costs, and the defendant appeals.

John A. Kelly, for appellant. D. W. Agnew, for respondent.

WINSLOW, J. (after stating the facts). The main question at issue between the parties was whether the contract was simply to bore a well at a certain price per foot or whether the plaintiff, in addition, guaranteed to obtain a sufficient supply of water for the defendant's farm purposes. Upon this question most of the minor questions hinged. The evidence was in direct conflict upon the question, and it seems to have been fairly and fully submitted to the jury, who returned a verdict in favor of the plaintiff's version. While many exceptions were taken, there are only a few of them which are tangible or worthy of serious attention, and these will be briefly considered.

It appeared that the payment of $175 was made by the defendant to the plaintiff's wife, and that she was her husband's agent for that purpose. It did not appear, however, that she had any broader authority as agent of her husband, or had ever assumed to act as agent except to keep her husband's accounts and collect bills. One Ellen Davis, who was present at the time the money was paid, was called as a witness by the defendant, and upon cross-examination volunteered the statement that when plaintiff's wife received the money she said that her husband would make the well all right. This statement was stricken out by the court, and the ruling is assigned as error. There are two answers to the claim. In the first place, the witness had already testified to the fact in her direct examination, and the statement was never stricken out; in the second place, there is no evidence that the plaintiff's wife had any express or apparent authority to make any such agreement on behalf of her husband.

The court charged the jury that in a contract of well drilling there is no implied undertaking that water shall be obtained, or that the well shall be a success as to the quantity or quality of the water obtained, but only that the work shall be done in a workmanlike manner, with such skill as may ordinarily be expected from those who undertake such work. It is contended that this instruction is erroneous; and that an agreement to obtain a sufficient supply of good water is implied in every contract to dig or bore a well. We are referred to no authority in support of this contention, nor have we found any. The uncertainty of obtaining a supply of good water, however skillfully the work is done, is matter of common knowledge. If well diggers were to be held to guaranty such results whenever they undertake to dig a well, we think there would be a great scarcity of diggers. We have no hesitation in approving the principle laid down by the trial court upon the subject.

The court took from the jury the consideration of all items in the counterclaim except the claim to recover the $175 paid on the contract, and this is claimed to be error. In support of this assignment of error it is said that there was evidence by the defendant to the effect that the plaintiff agreed that he would get water in eight or nine days; also that there was evidence that the well was negligently and unskillfully bored, and thus consumed several months in its construction, and hence that the defendant furnished board to the plaintiff and his helper and team for a long period, more than he was required to furnish by the contract, for which he is entitled to recover if the jury found either that the contract was as claimed by defendant, or that the work was negligently prolonged. As to the first of these claims, it is sufficient to say that the defendant himself testified that the conversation between himself and the plaintiff was to the effect that the plaintiff thought it would take three or four weeks, but that he did not know the length of time it would take to get water. The evidence cannot be construed as showing that any definite contract as to time or depth was made by the plaintiff, even construing it most favorably to the defendant.

As to the second claim, there is absolutely no evidence that the boring of the well consumed any longer time by reason of careless or negligent work than it would have consumed if the work had been faultless. It is true there was some evidence that the alleged failure to furnish a supply of good water was due to some defect in piping at the bottom of the well, but this failure, if such there was, did not tend to increase the time consumed, but rather to diminish it. All this evidence tending to show a failure to obtain a supply of good water on account of negligent work was properly submitted to the jury on the general question whether the plaintiff

Digitized by Google

had fulfilled his contract, and under the circumstances of the case this was plainly its only legitimate function.

A number of instructions were requested by the defendant and refused, but, so far as they were correct, they were fully covered by the general charge. The general claim is made that the verdict is against the evidence, but examination of the record shows that this contention cannot be sustained.

Judgment affirmed.

ANDERSON CARRIAGE CO. v. PUNGS.

(Supreme Court of Michigan. Sept. 30, 1903.)

CONTRACTS—ACTION FOR BREACH—INSTRUCTIONS — DAMAGES — EVIDENCE—OPINION OF SUPREME COURT—DISCREDITING WITNESS.

1. A company having a contract for the manufacture of brake beams, which constituted almost its entire business, consolidated with plaintiff on the representation of defendant that it would continue to yield large revenue. After the consolidation the contract was canceled, and it was claimed defendant agreed, in consideration of the officers of the company refraining from winding up the business, to transfer to plaintiff certain valuable patents for improvements in brake beams, which would enable plaintiff to continue the business, and represented that the brake beam department need not be closed because of the cancellation of the contract. Defendant failed to transfer such patents, disposing of them, and promising not to engage in the brake beam business in any way. Plaintiff claimed the value of the patents and damages resulting from the breach of contract. *Held* sufficient to justify the refusal of an instruction that plaintiff was not entitled to recover on the theory that defendant promised to make good the loss sustained by the discontinuance of the contract for the manufacture of brake beams.

2. Plaintiff company consolidated with a company having a contract for the manufacture of brake beams. After the consolidation the contract was canceled, and defendant, who represented the company consolidating with plaintiff, agreed with the officers of plaintiff, in consideration of their refraining from winding up the business of the company, to transfer to the plaintiff for its own use and benefit certain valuable patents for improvements in brake beams, which would enable it to continue the business. Defendant failed to perform his agreement, and plaintiff sued for breach of contract. *Held* insufficient to warrant the legal conclusion that the agreement was with the officers as individuals, precluding plaintiff from maintaining the suit.

3. Plaintiff claimed damages resulting from defendant's breach of contract to transfer valuable patents to it by use of which plaintiff could make certain profits. The court instructed that, if the jury found for plaintiff, they should award such damages as would compensate for the loss of the patents, which defendant agreed to transfer to it. The defendant's only request was to allow only nominal damages. The patents were sold for a large amount. *Held*, that the failure to charge more fully as to the damages was not reversible error.

4. Where the testimony of parties is contradictory, the opinion of the Supreme Court in another case between them cannot be read as bearing on the credit which should attach to the testimony of one of them for the purpose of discrediting him.

Error to Circuit Court, Wayne County; Morse Rohnert, Judge.

Action by the Anderson Carriage Company against William A. Pungs. From a judgment for plaintiff, defendant brings error. Reversed.

Barbour, Rexford & Field, for appellant. Russel & Campbell, for appellee.

MOORE, J. This is a suit in assumpsit, brought by the Anderson Carriage Company, a Michigan corporation, against William A. Pungs. The plaintiff recovered a verdict for $17,970.24. The defendant has brought the case here by writ of error.

Prior to February 12, 1897, the Anderson Manufacturing Company was a corporation located in the city of Detroit. The Michigan Railway Supply Company was also a corporation located in the city of Detroit. On February 12, 1897, the two companies were consolidated, and all of their property and assets were conveyed to a new company, known as the Pungs-Anderson Manufacturing Company. On the 29th day of May, 1899, the name of the consolidated company was changed to the Anderson Carriage Company, the plaintiff herein. It is the claim of the plaintiff that the negotiations which brought about the consolidation of these companies were conducted by Anderson and Locke, representing the Anderson Manufacturing Company, and Pungs representing the Michigan Railway Supply Company; that in these negotiations Pungs represented that the earning capacity of his company, the Michigan Railway Supply Company, was equal to 10 per cent. of its capital stock, which he represented to be $400,000; that there were two departments to the plant of the Michigan Railway Supply Company, viz., the department in which nuts and washers were manufactured, and the department in which brake beams were manufactured; that the brake beam department constituted much the larger portion of its business, and yielded 70 per cent. or 75 per cent. of its annual earnings; that the brake beam department was so related to the nut and washer department that it was impracticable to continue the running of the latter in case the company was compelled to close the former department, for the reason that the nuts and washers so manufactured were made from the iron scrap of the brake beam department; that the brake beams were made solely for the American Brake Beam Company of Chicago, and this constituted the entire business of the brake beam department. In December, 1897, the American Brake Beam Company canceled its contract with the Pungs-Anderson Manufacturing Company. It is claimed the Michigan Railway Supply Company was taken into the consolidation upon the representation that it could be relied upon to yield more than 50 per cent. of the earnings of the consolidated company, and its stockholders received in exchange for their holdings stock of the con-

Digitized by Google

solidated company to the amount of $100,000, while the stockholders of the Anderson Manufacturing Company received consolidated company's stock to the amount of $70,000 only. It is claimed that in January, 1898, Anderson and Locke, in their own behalf and as officers of the Pungs-Anderson Manufacturing Company, informed Pungs they intended forthwith to sever their connection, both individually and as officers of said company, and intended to place their holdings upon the market, and dispose of them as best they could; and as officers of the company they notified Pungs that the Pungs-Anderson Manufacturing Company was crippled to such an extent by the loss of the brake beam business that as such officers they would immediately urge a disposition of the assets of said company in whatever way might seem practicable, and as officers of said Company would do all in their power toward winding up the affairs of said Pungs-Anderson Manufacturing Company; that Pungs admitted the seriousness of the situation, and his responsibility for it, and endeavored to induce Anderson and Locke to refrain from taking the steps which they had determined upon, and said that the department for manufacturing brake beams would not have to be closed and cease operating because of the American Brake Beam Company's discontinuing doing any further business with them, and that, on the contrary, he (Pungs) was procuring and was about to procure letters patent upon improvements in brake beams, which patents he represented to be of great value, and that the Pungs-Anderson Manufacturing Company, by using these patents, could continue to manufacture brake beams, and make large profits out of its brake beam department; and Pungs promised to turn over and assign to the Pungs-Anderson Manufacturing Company these patents to make good the loss which it had suffered from the failure of the brake beam business. It is claimed Anderson and Locke promised and agreed to continue their connection with the company and to retain their holdings of stock in the same, and, as officers representing said company, promised and agreed with Pungs to withhold urging a disposition of the company's assets, and, as said officers, promised and agreed to refrain from doing anything toward winding up the affairs of said company, or taking any steps toward changing the policy of the company in any manner whatsoever on account of the crisis which the company then was facing; that Pungs, in consideration of the promises of Anderson and Locke, promised and agreed to and with them, as officers of the corporation, to transfer and assign to the Pungs-Anderson Manufacturing Company, for its own use and benefit, such valuable patents for improvements upon brake beams as would enable the company to carry on its brake beam business at a large profit; that in pursuance of this agreement the company, with the knowledge of Pungs, and under his direction, and at his request, made expenditures of at least $400 in manufacturing patterns, in purchasing tools and raw materials and employment of labor, etc., for the purpose of putting into practical working order the said patents for improvements in brake beams; that Mr. Pungs obtained the patents in June, 1898, and April, 1899, and that, instead of turning them over to the plaintiff, as he agreed to do, he sold them to the American Brake Beam Company of Chicago for $10,000. In the agreement by which the American Brake Beam Company agreed to pay Pungs $10,000, Pungs not only turned over the patents to the brake beam company, but also promised and agreed not to engage in the brake beam business in any way, shape, or form at any place within the United States of America, its territories, or the District of Columbia, and that he will not be connected with any company manufacturing or selling brake beams in the United States, either as officer, employé, or shareholder (Chicago Railway Equipment Company alone excepted) at any time during the period covered by said letters patent. It is claimed that by reason of Pungs' breach of his contract the Anderson Carriage Company was compelled to abandon the manufacture of brake beams, nuts, and washers, which constituted the entire business of what had been the Michigan Railway Supply Company prior to the consolidation. On the part of Pungs it was denied any such agreement was made.

It is claimed the court erred in refusing to give the following request: "That the plaintiff is not entitled to recover in this cause on the theory that the defendant promised to make good to the plaintiff the loss, if any, which it sustained by reason of the fact that the American Brake Beam Company did not enter into a new contract with the plaintiff after the expiration of the contract from January 1, 1897, to January 1, 1898, offered in evidence, and marked 'Exhibit G,' since the declaration does not allege any agreement on that theory, and since damages for breach of such agreement, if such agreement was made, cannot be recovered under the common counts annexed to the special count in the declaration in this cause." The declaration contained the following: "And thereupon the said Pungs represented to said Anderson and said Locke that the said department for manufacturing brake beams would not be closed and cease operating because of said American Brake Beam Company's discontinuing doing any further business with it, but, on the contrary, that he, the said William A. Pungs, was procuring and was about to procure letters patent upon improvements upon brake beams, which patents said Pungs represented to be of great value; and said Pungs further represented that the said Pungs-Anderson Manufacturing Company, by using said patents and manu-

facturing brake beams by such use, would be able to make large profits out of the brake beam department of said company; which said patents said Pungs promised to turn over and assign to said Pungs-Anderson Manufacturing Company, to be and remain its property. * * * Said Pungs represented that he would turn over and assign to said Pungs-Anderson Manufacturing Company said patents to be issued, to be and remain its property, and that the ownership of said patents to be issued by the said Pungs-Anderson Manufacturing Company would place it (the said company) in such a position with regard to manufacturing brake beams that it would be beyond competition, and that because of said Pungs transferring his rights to said company in said patents to be issued, and the company having the benefit thereof, said brake beam department would thereafter yield large and increased earnings. And said Pungs represented that he considered it extremely fortunate from a business point of view for the said Pungs-Anderson Manufacturing Company that its relations toward said American Brake Beam Company were so altered on the initiative of the said Brake Beam Company that it (the said Pungs-Anderson Manufacturing Company) could enter upon the manufacture of brake beams independently and in competition with the said American Brake Beam Company, which theretofore it was not in a position to do; and further represented that the additional earnings thus accruing to the said Pungs-Anderson Manufacturing Company by the use of said patents to be issued would be far in excess of any profits theretofore realized from or on account of the business with said American Brake Beam Company." The bill of particulars also claimed for the value of the letters patent as particularly set forth in the declaration filed in this suit $60,000, and also January 1, 1901, damages resulting from breach of contract, whereby said defendant agreed to transfer and assign valuable patents to plaintiff, by the use of which plaintiff could manufacture brake beams at a large profit, $15,000. We think the theory of plaintiff was sufficiently set out in the pleadings to justify the court in refusing the request.

It is claimed the plaintiff cannot maintain this action; that the contract, if any was made, was between Mr. Anderson and Mr. Locke on one side and Mr. Pungs on the other, and that the plaintiff is not a proper party to the litigation. The circuit judge charged the jury upon that feature of the case as follows: "If you find that he did make this promise, you will consider the next question—to whom did he make the promise? If he made the promise to assign to the plaintiff company—if you find that he made a promise to assign to Anderson and Locke personally—you will find for the defendant, because, if he made the promise to Anderson and Locke personally, and not to the plaintiff company, there is no such contract here as will entitle the plaintiff company to bring the action. So, if you find that he promised, and that the promise was made to Anderson and Locke personally, in consideration of their personal promises, you must find for the defendant no cause of action. If, however, you find that these promises were made to the plaintiff company, and were made to Mr. Anderson and Mr. Locke as officers of the company, acting for the company and on behalf of the plaintiff company, then you will find for the plaintiff." A similar question was before the court in Anderson Carriage Co. v. Pungs, 127 Mich. 543, 86 N. W. 1040. The trial court charged the jury as follows: "There is just one question in this case to be submitted to you, and that is whether or not Mr. Pungs, the defendant, is entitled to his salary from the 5th day of May to the 1st of June, 1899. You have heard the testimony of the various witnesses produced here. On the part of Mr. Pungs it is plain that his salary was to continue until he was released from his obligations on certain notes; that he subsequently waived this, and put in a resignation to take effect on the 1st of June. Other witnesses produced by the plaintiff in this case testified that it was the arrangement that Mr. Pungs should vacate his position on the 5th of May, and that his salary should then cease. Now, that is peculiarly a question for you. What was the agreement? If it was the agreement between these parties that Mr. Pungs' salary should cease when that stock was transferred, then Mr. Pungs is not entitled to that salary after the 5th of May. If, on the other hand, it was the agreement that his salary should continue until he was released from his obligations on these outstanding notes, then he is entitled to his salary from the 5th of May to the 1st of June." Mr. Justice Hooker, speaking for the court, said: "This defendant claims that his office was not made vacant by the sale of his stock; that there is no evidence that, as part consideration for the purchase of his stock, he agreed to vacate the office; and that, if there was such contract, it was between him on one side and Anderson, Locke, and Newcomb upon the other, and that the plaintiff was not a party to it. The jury found that Pungs did agree to get out of the company and give up his office upon the sale of his stock, and we think the evidence indicates that it was the understanding of all that he should. We think, moreover, that he is in no position to deny plaintiff's right to treat the office as vacant. It is apparent that the action of the members of the board of directors was not merely personal. The interests of the company demanded a change, and its officers negotiated with Pungs to bring it about. We cannot say, as a legal conclusion, that this

Digitized by Google

was a personal contract between the individuals." See, also, Monaghan v. Fire Insurance Co., 53 Mich. 238, 18 N. W. 797.

It is claimed the court erred in his charge to the jury upon the question of damages. The charge relating to that subject was as follows: "If you find for the plaintiff in this case, you will award the plaintiff such damages as, in your judgment, will compensate the plaintiff company for Mr. Pungs' failure to carry out his part of the contract, if you find that he made the contract. * * * If you find for the plaintiff, you will award it, as I have said, such damages as, in your judgment, will compensate it for the loss of the patents which Mr. Pungs agreed to transfer to the company." The judge was not requested to charge the jury more in detail upon this subject. The only request made by defendant bearing upon the question of damages was that, if the jury found in favor of the plaintiff, it should be for only nominal damages, namely, six cents. As there was testimony tending to show that the patents were sold for a large amount, this request was properly refused. We do not think, in view of this record, the failure to charge more in detail upon the subject of damages was reversible error.

Upon the trial Mr. Anderson and Mr. Pungs were witnesses. Their testimony was contradictory to each other. They were both witnesses in the case referred to later. Upon the trial of this case the following occurred: "Mr. Campbell: I now offer in evidence a decree of the Supreme Court of Michigan, filed July 19, 1901, in the case of Anderson Carriage Co. v. Pungs (Mich.) 87 N. W. 105, in which it is judicially determined what the intentions of the parties are in relation to the conveyance of this land that has been referred to. Mr. Rexford: That is absolutely absurd, immaterial, and irrelevant. Mr. Pungs admitted that the court was against him in that case, and said that it was based upon the false testimony of Mr. Anderson. The object of it is to cast some reflection upon Mr. Pungs by reason of the fact that the court held against him where his testimony was on one side and Mr. Anderson's was on the other. I think any such offer as that is improper, and I take an exception to it. The Court: I think, in view of the testimony, it would be material for the other side to show what property passed from the railway supply company to the consolidated company. They have a right to show what the property was which passed to the consolidated company. Mr. Rexford: We have conceded what the deed was, and to read the opinion of the Supreme Court cannot be material. The Court: It is material in view of the testimony of Mr. Pungs characterizing the testimony of Mr. Anderson in the other case. I think I will permit such parts of this opinion to be read as will show whether the Supreme Court, in passing upon the matter, passed upon the question of the veracity as between Mr. Pungs and Mr. Anderson. Mr. Pungs' testimony was that it was a question of veracity between himself and Mr. Anderson, which decided the question. If there are any parts which bear upon that, I will permit it to be shown." An exception was taken and Mr. Campbell read to the jury the opinion of the Supreme Court, as follows: "Mr. Pungs was asked: 'Q. You heard Mr. Newcomb's testimony. Do you recollect any conversation with him with reference to buying an acre? A. No, sir. Q. What conversation do you recollect that you had with him about buying an acre, or about the amount of land that was to be deeded? A. When I had the conversation—the only conversation I recollect the records show is what land we needed. We bought just what land we needed; no more. We needed just that piece, and no more. We had a building 300 by 75 feet, and that is five times the size of the building they had before that. It was ample for our use in every respect.' On his cross-examination defendant was asked: 'Q. Isn't it true, in the conversation that you had with Newcomb and the others at the time interested in the company, that your talk was that you would sell them one acre? A. No, sir. If there had been we could never have said so many feet. Q. There was no such talk about an acre at all? A. I do not think so. We might have said it was about an acre, and gave them the dimensions.' He was then examined upon the statement in the deed that the property contained about one acre. He was asked: 'Q. What do you mean by the statement in the deed that the parcel hereby conveyed contained about one acre of land? A. I did not put it in. I asked Mr. Post (the attorney), and he said it was customary when it was anywhere near an acre.' It appears to us that the facts of this case all tend to show that the whole of lot 21 was intended to be conveyed by the deed of September 21st." It will be seen this opinion was read for the purpose of discrediting Mr. Pungs. This court passed upon the case made by the record which was presented to it in the case then before it. Whatever may have been its opinion as to the credit to be given to Mr. Pungs in that case, it was no more competent, as bearing upon the question of what credit should attach to Mr. Pungs' testimony in this case, than would be the opinion of one of the jurors in that case. Counsel, with all their zeal and learning, have not called our attention to an authority justifying the admission of this opinion. We think they would have done so if one could have been found. We think this was harmful error, and for it the judgment of the court below is reversed, and a new trial ordered.

MONTGOMERY, J., did not sit. The other Justices concurred.

Digitized by Google

RANDALL v. DETROIT & N. W. RY. et al.

(Supreme Court of Michigan. Sept. 30, 1903.)

STREET RAILROADS — SALES — PAYMENT OF DEBTS—GUARANTY—ENFORCEMENT BY BONDHOLDERS—EQUITY.

1. Defendant railway company, being insolvent, sold its road to another railroad, payment being made in bonds of the purchaser, one of the conditions of the sale being a guaranty that the property, when sold and delivered, should be free from all incumbrances, and that all claims of every nature against defendant or its property, for which it was liable on May 1, 1901, should be fully discharged before the delivery of the price, and to save the purchasing company harmless on account thereof. *Held*, that such agreement was personal to the purchasing company, and was not enforceable in equity against defendant and the guarantors for the benefit of defendant's bondholders.

Appeal from Circuit Court, Wayne County, in Chancery; Morse Rohnert, Judge.

Bill by James A. Randall, trustee, and others against the Detroit & Northwestern Railway and others. From a decree sustaining a demurrer to the bill, complainants appeal. Affirmed.

John Miner (Alfred Russell, of counsel), for appellant. Russel & Campbell, Geer & Williams, Thomas A. E. Weadock, and H. R. Martin, for appellees.

MONTGOMERY, J. The complainant and defendants Voigt and Brownell were the owners of all of the stock and assets of two street railways—the Grand River Electric Railroad and the Pontiac & Sylvan Lake Railway. Upon March 31, 1899, they sold all of the property and assets of both railway companies to the Detroit & Northwestern Railway Company, receiving in payment stock of the last-named company and $260,000 of its bonds of an issue of $900,000; and $560,000 of bonds were isused to the Wolverine Construction Company, a company organized by the same parties for the purpose of building and constructing the Detroit & Northwestern Railway, its tracks, overhead work, etc. Subsequently it became necessary for the Detroit & Northwestern Railway to raise further funds to be used in paying its debts and necessary expenses, and the 260 bonds, in which the complainant had a one-third interest, were loaned by the defendants Voigt and Brownell to the railway company to be used for that purpose. No complaint is made as to the manner in which the bonds were used, but it is alleged, on information and belief, that they were pledged as collateral security to the obligations of the railway company.

May 7, 1901, the Detroit & Northwestern Railway, being financially embarrassed and insolvent, and unable to pay its debts or the interest on them, sold its railroad and property to the Detroit United Railway for the sum of $855,000, payment to be made in bonds of the latter company to that amount out of an issue of $1,000,000, secured by a trust mortgage upon the property purchased, the remaining bonds to be used only for the improvement and extension of the railway so acquired. One of the conditions of the sale was that the Union Trust Company, the Preston National Bank, and W. J. Hayes & Sons, being creditors and holders of outstanding bonds of the Detroit & Northwestern Railway, should guaranty the agreement of the Detroit & Northwestern Railway; "that the property, when sold and delivered to said Detroit United Railway, shall be free from all liens, adverse rights, titles, and incumbrances, and that all debts, dues, demands, and claims of every name and nature against said Detroit & Northwestern Railway, or its property, for which it was liable May 1, 1901, shall be fully paid, satisfied, and discharged before the delivery of the purchase price, and to save the said Detroit United Railway, such vendee as it may designate, harmless on account thereof." This guaranty was executed and delivered to the Detroit United Railway. Complainant does not attack the sale; he does not assert that it was illegal or for an inadequate consideration or that he did not consent to it; neither does he claim that the proceeds were not properly applied in retiring the obligations of the Detroit & Northwestern Railway. The prayer of the bill is (1) that the Detroit & Northwestern Railway account with respect to the bonds in which the complainant had an interest; (2) that in case it appear that the defendants, the Preston National Bank, the Union Trust Company, and William J. Hayes & Sons, have obligated themselves to pay all debts, dues, demands, and claims, of every name and nature, against said Detroit & Northwestern Railway, or its properties, for which said railway was liable on May 1, 1901, then that the complainant be subrogated to the right of the Detroit United Railway to call on the parties named to respond to such obligation. Three of the defendants, the Union Trust Company, the Preston National Bank, and W. J. Hayes & Sons, demurred to the bill, and upon hearing the demurrer was sustained. Complainant appeals.

The solicitor for the appellant, in his brief filed in this court, says: "The validity and good faith of the sale is not questioned in this case." No claim is made that the proceeds of the sale passed into the hands of the guarantors, or that they became responsible for them in any way whatsoever or for their application, or that they derived any benefit from such proceeds, except as they would be entitled, with other creditors, to have paid to them by the Detroit & Northwestern Railway, which received the proceeds, their just proportion of the purchase price. For a failure in that behalf any bondholder would be entitled to an accounting from the Detroit & Northwestern Railway, but that question is not now before the court.

The appellant admits that, unless he is able to show that in equity he is entitled to be admitted to the benefits of the en-

Digitized by Google

gagement entered into between the defendants, the Union Trust Company, the Preston National Bank, and W. J. Hayes & Sons, on the one part, with the Detroit United Railway, as the purchaser of the assets of the Detroit & Northwestern Railway, on the other part, the decree below ought to be affirmed. But it is contended that the complainant is entitled to be subrogated in place of the Detroit United Railway, and to enforce against the three named defendants the agreement to pay the debts of the Detroit & Northwestern Railway. This presents the question for solution.

The engagement of the three named defendants recites that the Detroit & Northwestern Railway is financially embarrassed, and unable to pay its debts or the interest thereon, and is insolvent. The complainant, as well as the three demurring defendants, was a creditor of the Detroit & Northwestern Railway. He was also a stockholder. So far as the bill discloses, it was to his advantage that the sale of this property should be had, and the proceeds applied to the payment of the debts of the company. It is suggested by the complainant's solicitor—indeed, it is contended and asserted—that, as between the vendee and the vendor, the former had no interest in seeing that all the latter's creditors were fully paid. The utmost that would be required of the vendee would be good faith, and the utmost that it could insist upon or fairly expect was an indemnity to itself as against any liens or claims of creditors affecting the purchase property. And it is argued from this that the guaranty by the creditors of the vendor's covenants to fully pay and satisfy its liabilities was a distinct and valuable right, to which, unless it be construed as being made for the benefit of creditors, the vendee succeeded by virtue of its purchase of the property and assets of its vendor, and in whose hands it is void, of substantial benefit or advantage to any one.

This is a correct statement of the situation, and it leads to the inquiry as to whether the purpose of this engagement was to obligate the guarantors to actually discharge the debts and to incur an obligation to the creditors of the Detroit & Northwestern Railway of that character, or whether it was intended as an engagement of the Detroit United Railway which might be discharged by any performance satisfactory to that company, the vendee in the agreement between the Detroit & Northwestern Railway and itself.

The rule of law is too well settled in this state to require extended citation of cases that a promise as broad as that which it is claimed by complainant was made in this case is enforceable only by the promisee. Pipp v. Reynolds, 20 Mich. 88; Wheeler v. Stewart, 94 Mich. 445, 54 N. W. 172, and cases cited. But it is contended by complainant that this rule of privity is a rule of law, and that a different rule obtains in equity. We recognize fully the rule that where, under equitable considerations, a third party is entitled to be subrogated in equity, he may enforce a promise made by one not in direct privity with him; but this rule arises out of the peculiar relations of the parties, like that of surety and principal or trustee and cestui que trust. In the absence of such relation, and particularly where, as in this case, a subrogation would work injustice and inequity rather than equity, the court of equity will follow the law. See In re Rothman, L. R. 25 Ch. D. 103. In that case obligations had been incurred by the promoter of a corporation. An agreement was made by the corporation (when formed) with the promoter to pay the expenses incurred in organizing the corporation. The solicitor who had performed services in the matter sought to charge the corporation in equity. It was held that this could not be done for want of privity.

In Nelson v. Rogers, 47 Minn. 103, 49 N. W. 526, a question somewhat analogous to the one in the present case was presented. In that case a purchaser had accepted a grant in which there was a clause by which the purchaser assumed and agreed to pay a one-third part of an outstanding mortgage on the property. His immediate grantors were not obligated to pay the mortgage. Prior grantors sought to avail themselves of this engagement. The court said: "Such a stipulation is presumed to be inserted primarily for the protection of the grantor. And it is only where payment of the debt as a personal obligation is necessary to his protection that the clause is to be construed as intended for the benefit of the mortgagee beyond his right of recourse to the land. Otherwise the obligation of the grantee to the mortgagee would be greater than his obligation to the grantor, his promisee."

So in the present case the only concern which the Detroit United Railway has in the payment of the debts of the Detroit & Northwestern Railway is that it should be indemnified against loss to itself, and in an action brought by that company upon this obligation the damages would be limited to such damages as had accrued to it by reason of this failure of the guarantors to pay the outstanding obligations. This, the brief concedes, would be no damage at all, and to construe this engagement into an agreement made for the benefit of the creditors of the Detroit & Northwestern Railway would be to create an obligation on the part of the defendants which would be greater to them than would such obligation be to the party with whom they contracted. We think it very clear that in equity those not parties to the agreement could not be subrogated to greater rights than those with whom the agreement was made. Upon this point the case of Wilcox v. Musche, 39 Mich. 101, is certainly instructive, if not controlling.

Digitized by Google

We think the action of the circuit court in sustaining the demurrers should be affirmed, with costs.

GRANT, J., did not sit. The other Justices concurred.

STORRIE v. GRAND TRUNK ELEVATOR CO.

(Supreme Court of Michigan. Sept. 15, 1903.)

MASTER AND SERVANT—INJURIES TO SERVANT—DEATH AFTER CONSCIOUS SUFFERING — ACTIONS BY ADMINISTRATOR — NATURE AND FORM—SURVIVAL—EVIDENCE—OPINIONS —MISCONDUCT OF JURY—WITNESSES—COMPETENCY—ACTIONS BY ADMINISTRATOR.

1. Where, in an action for death of a servant by being struck by a heavy gate, defendant claimed that intestate was guilty of contributory negligence in going under the gate, and plaintiff claimed that it was necessary for intestate to take such position in order to see that ropes passing over the gate did not foul, it was competent for witnesses acquainted with the premises and work, who had first stated the conditions and circumstances, to testify to their opinion as to whether, in the ordinary course of intestate's duties, it was a necessary or proper thing for him to go under the gate.

2. In an action for the death of a servant by the falling of a heavy gate, which was out of repair, in which defendant claimed that it was intestate's duty to inspect and repair the gate, and therefore he could not recover, it was not prejudicial error for the court to permit a witness to testify as to whether it was the duty of defendant's superintendent to keep the gate in repair.

3. Where, on a prior trial of an action for the death of a servant, caused by the falling of a defective gate, a plug, a part of the gate, which had been brought into court, had been removed by the jury, but was identified on a second trial, such removal of the plug was no ground for reversal of a judgment in favor of plaintiff on the second trial.

4. In an action for the death of a servant, caused by the falling of a defective gate, testimony of defendant's superintendent relating to the circumstances of the accident, of which he was merely a passive spectator, and in which no act of his own as agent of defendant was involved, was not objectionable on the ground that the circumstances were equally within the knowledge of deceased.

5. Where the death of plaintiff's intestate, caused by the alleged negligence of his employer, was not instantaneous, the remedy of his administrator was an action under Comp. Laws, §§ 10,427–10,428, providing for the survival of actions for injuries for the benefit of the next of kin, and not for death, as authorized by Comp. Laws, § 10,117.

Error to Circuit Court, St. Clair County; Frank Whipple, Judge.

Action by Flora Storrie, as administratrix of the estate of J. Storrie, deceased, against the Grand Trunk Elevator Company. From a judgment in favor of plaintiff, defendant brings error. Reversed.

Herman W. Stevens and John C. Graham, for appellant. George G. Moore and John L. Black, for appellee.

HOOKER, C. J. The plaintiff's husband was severely injured at the defendant's elevator, and died a few hours later. This action is brought by his widow as administratrix. At the elevator the defendant had an apparatus for unloading grain from vessels. The building was three feet from the edge of the dock. The grain was raised through a leg, which extended from the upper stories of the elevator into the hold of the vessel. Grain was brought to the end of the leg in the hold by the use of large shovels, drawn by ropes, which were wound upon drums in the front part of the lower story of the elevator. There were two shovels, the lines to each winding upon such a drum, which thus drew the shovel full of grain. By reverse action the shovel was drawn back empty, the lines being unwound as they were wound upon other drums. These lines extended from the elevator to the boats through a high and wide door in the first story of the elevator, upon each side of which large door was an ordinary door for ingress and egress to and from the elevator. The space in front of the drums was barred by large levers, one on each side of the large door, which set the respective drums in motion through the contact of a friction wheel. In the large door was a gate, made of heavy timbers, with rollers, over which rollers the lines passed, and by raising or lowering the gate, according to the height of the boat, the lines were properly adjusted to work without friction. It is obvious that the strain on the roller, and consequently upon the gate, was considerable. The gate was suspended to a pulley, used to raise or lower it, by an eyebolt passed through the top timber or head of the gate, and on the occasion of the accident this eyebolt pulled out, letting the gate fall, and Storrie, who stood under it, was crushed.

The defendant claims that a verdict should have been directed against the plaintiff upon the ground of Storrie's contributory negligence in standing under the gate, which it claims was an unsafe place, and that it was unnecessary for him to go there. It also asserts that Storrie fixed the gate and adjusted the ropes, and had an opportunity to see, when it was suspended, that the eyebolt was loose, and had pulled up an inch or two. The gate was made of heavy timbers, two horizontal, constituting the top and bottom, connected with three perpendicular cross-pieces, mortised into the top and bottom. The middle cross-piece was immediately under the eyebolt, and a slot was cut into it to accommodate the nut on the end of the bolt and a washer, which should have been, but was not, used above the nut. The slot was filled by a block, which, when in place, would conceal the nut and washer. It is manifest that, if the nut was pulled up into the wood, the eyebolt would become loose, and that, if it became loose, it must be due to one of two causes, viz., such pulling of the nut into

¶ 1. See Death, vol. 15, Cent. Dig. § 18.

Digitized by Google

the wood, or the loosening of the bolt from the turning of the nut, which one familiar with the construction would ordinarily know.

The accompanying diagrams show the construction, also a break in the upper horizontal bar of the gate. This crack had been discovered, and the bar had been strengthened by spiking some 2x12 pieces upon the sides. This concealed the crack. It was

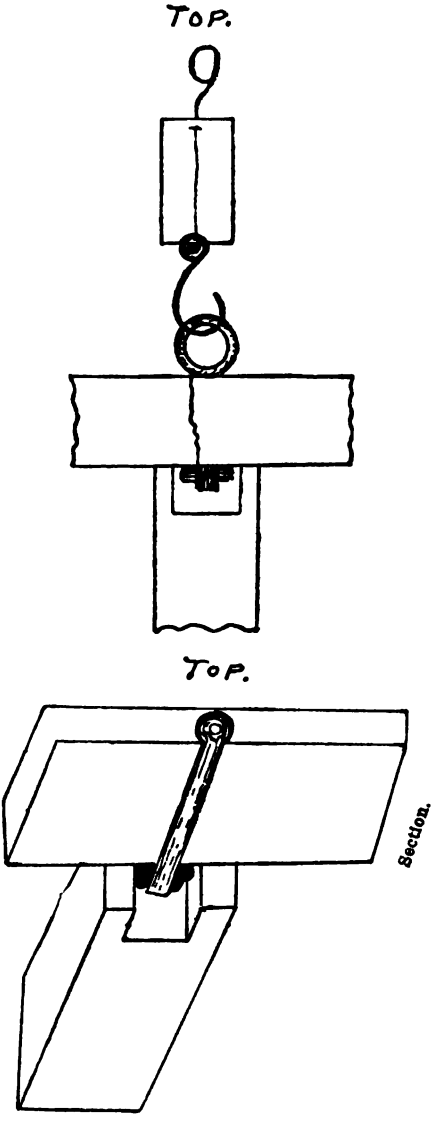

claimed by the defendant that James Storrie had worked for many years as foreman of the steam shovel gang at this elevator, and in making necessary repairs, and doing other work about the elevator, that he was well acquainted with the machinery, the operation of which it was his duty to oversee, including the oiling of machinery, and its adjustment to the boat to be unloaded. The defendant insists that Storrie was negligent in going under the gate, and that he had no occasion to go in front of the drums or gate, between the levers, which he would have to stoop and go under the levers to do; while the plaintiff claims that it was necessary for him to go there, to see that the lines did not become tangled or "fouled." The defendant claims that Storrie built this gate, and put in the eyebolt and nut himself, about a year before the accident, neglecting to put on a washer, but for which the nut would not have pulled up into the wood. He then put in the plug and painted the gate. It is said that he was the only person who knew of the absence of a washer, that he knew all about the construction and strain upon the gate, and, being competent to inspect it, and being at work when it was repaired, and knowing that he was to act as foreman, he made no complaint about its being insecure, and on the day of the accident—being after the repairs were made—he oiled the gearing, and put the machinery in readiness for work, and should have discovered the defect. Just before the accident he took an oil can, stooped down and went under the lever, and entered between the gate and the drums, and as he stepped under the gate the eyebolt pulled out, with the nut upon it, and the heavy gate fell upon him. He lived two months, retaining consciousness. The defendant brings error upon a judgment for plaintiff of $8,000.

"The negligence charged was the failure of defendant to inspect the gate, and to see that the head of the gate through which the eyebolt passed was not decayed, or rotted, broken, or splintered." The plaintiff claims that the gate was taken down for repairs about six weeks before the accident by one Bennett and four carpenters. It was found that the head piece was cracked, and that the ringbolt had worked up two inches into the wood. The only repair made was the spiking on of the two planks to strengthen the head piece. That Storrie had nothing to do except in the capacity of foreman of the shovel gang—nothing to do in the line of his work about the elevator, except to properly superintend the unloading of cargoes. The questions discussed in the briefs of counsel relate: (1) To the admission of opinion evidence as to the propriety of Storrie's being in front of the drums; i. e., whether it was necessary, and in the line of his duty. (2) To the admission of the testimony of witnesses that it was the duty of one Burke to keep the gate in repair. (3) To the exclusion of evidence of the loss of the plug, upon the former trial, through its being sent to the jury room. (4) To the exclusion of the testimony of Burke, the superintendent of the elevator, on subjects equally within the knowledge of Storrie. (5) To the rule of damages followed in the case.

1. Opinion Evidence. It was claimed that Storrie was guilty of contributory negligence in going under the gate. Defendant insists

Digitized by Google

that this is a self-evident proposition, and that it necessarily follows from the undisputed facts. The plaintiff urges quite as strenuously that the successful operation of the machine required his presence there, to see that the ropes "did not foul," and evidence was given pro and con upon that point. Three witnesses were allowed to give their opinions as to the necessity of his going in front of the drums and under the gate, the court holding that it was proper to show the duties of a foreman by competent witnesses. They were also allowed to show the opinions that under the gate was the safest place in front of the drums. This question arose by reason of defendant's claim that it was negligence per se for the foreman to go there. These witnesses did not assume to say whether it was necessary for Storrie to be there on this occasion, but only that in the ordinary course of his duties it was a necessary and proper thing for him to do so. We are of the opinion that it was competent for these witnesses to express their opinions as to the necessity or expediency of entering in front of the drums or under the gate, it appearing that they were acquainted with the premises and work, having first stated the conditions and circumstances showing their knowledge, and upon which the opinion was based. It follows that the question of contributory negligence was for the jury.

2. Duty to Keep the Gate in Repair. Defendant complains that one McFarland was allowed to testify that "he would think it was Burke's duty to keep the gate in repair." Upon defendant's theory this was immaterial, because Storrie was charged with inspecting and repairing; but this was not conceded, and plaintiff's claim is that Storrie was called upon to operate the machinery, and not to inspect or repair it. There was no exception to this question, and, if there had been, it was not especially injurious, for the witness testified that it was no part of the foreman's duty, and, if not, it was the master's, and hence, whether it was imposed upon Burke, the superintendent, or some one else would make no difference. The important question was whether it was Storrie's duty or not, and the witness said it was not.

3. Misconduct of Former Jury. Defendant's counsel urge that they should have been allowed to show that the former jury had removed the plug from the gate. It was shown that the plug was in its place when the gate was brought into court on the former trial, and counsel for plaintiff conceded that it was taken out about the time the gate was taken into the jury room. The plug was identified upon the last trial, and we see no reason for reversing the case upon this ground.

4. Burke's Testimony. Defendant's superintendent, Burke, was asked, "Who had the looking after the fixing of the gate?" It also sought to prove by him that Storrie assisted in the last repairs by his direction. Also that he had cautioned Storrie about standing under the gate. Defendant also sought to show the circumstances of Storrie's entrance under the gate. All of this testimony was excluded or stricken out upon plaintiff's claim that the circumstances were equally within the knowledge of the deceased. In the case of Brennan v. R. R., 93 Mich. 156, 53 N. W. 358, it was held that the effect of this statute should be restricted to the exclusion of the testimony of such agents only as are authorized to act for the company in the matter with reference to which testimony is given. Applying this rule, it is plain that the superintendent was authorized to act for the company in warning Storrie not to go under the gate. The same is true of his direction to Storrie to take down and repair the gate, but his testimony relating to the circumstances of an accident, of which he was merely a passive spectator, and in which no act of his own as agent was involved, would not be excluded. Such testimony was admissible, and the ruling that he could testify to no fact equally within the knowledge of the deceased was too broad.

5. The Rule of Damages. The various decisions of this court following the case of Dolson v. Railway (Mich.) 87 N. W. 629, and specially Jones v. McMillan, 88 N. W. 206, show that the only right of action that the administratrix had was under the act providing for the survival of actions, whereas this action was prosecuted and recovery had under the death act. It was tried, and the motion for new trial was made, before the Case of Dolson was decided. Hence this question was not presented to the trial court, and ordinarily the question would not be considered here for that reason. As the case must be reversed for the ruling in relation to Burke's testimony, it is unnecessary to discuss the question of remedy or damages further.

The other Justices concurred.

STEVENS v. BEARDSLEY.

(Supreme Court of Michigan. Sept. 30, 1903.)

LANDLORD AND TENANT—ACTION FOR RENT—DEFENSES—EVIDENCE—INSTRUCTIONS—HARMLESS ERROR.

1. Evidence in an action for rent examined, and *held* sufficient to warrant the jury in finding that there had been a settlement of the accounts of the parties.

2. Where the court, in an action for rent defended by claims of set-off and settlement, fully instructed the jury on the burden of proof, it was not error, on the jury returning without having agreed on a verdict, to state that the burden of proof on all the propositions necessary for a recovery was on plaintiff, and to refuse to charge that the burden of proving a settlement was on defendant.

3. It is not error for the court to charge that the jury must answer a special question submitted one way or the other.

4. Where, in an action for rent, in which defendant pleaded, and the jury found, a settlement of the accounts of the parties, the exclu-

sion of the testimony of a witness, not bearing on the question of a settlement, was harmless error.

Error to Circuit Court, Montcalm County; Alfred Wolcott, Judge.

Action by William H. Stevens against William R. Beardsley. From a judgment for defendant, plaintiff appeals. Affirmed.

See 81 N. W. 921.

V. H. & H. H. Smith, for appellant. L. C. Palmer (N. O. Griswold, of counsel), for appellee.

MOORE, J. The defendant was a tenant of the plaintiff from some time in October, 1887, until December, 1892, or early in January, 1893. This suit was commenced in justice court August 29, 1898. It was appealed to the circuit court, where a verdict was rendered in favor of defendant, and upon appeal to this court the case was reversed. It is reported in 122 Mich. 671, 81 N. W. 921. A reference to the opinion will aid in understanding the questions involved in this appeal.

Upon the last trial, the jury again rendered a verdict in favor of defendant. It is the claim of plaintiff that when defendant vacated the building, he owed plaintiff $300.05, and, according to his own showing upon the trial, he owed plaintiff $49.41. Upon the part of the defendant, it is claimed that he did work for, and made payments to, the plaintiff, so that he had overpaid him $5.34. It is also his claim that in February or March, 1893, in response to his request made to the plaintiff that he come to defendant's house, and they would settle, that the plaintiff came, and, in response to an inquiry of how he thought the account stood, said he thought defendant owed him $70; that he got his books, and went through the accounts, and when they came to the item of a colt plaintiff had let defendant have for $60, the plaintiff stated he had forgotten all about the colt; that when they came to the item of lumber which defendant put into a partition in the building, defendant stated to the plaintiff that if plaintiff did not want the lumber, defendant would take it out, and would pay him the money, and that plaintiff desired him to leave it there; that they went over all the items, and that plaintiff made no objection to them, and that including the lumber at the price which he paid for it, which lumber was left, as requested by plaintiff; that there was a balance due defendant of $5.34; and that plaintiff went away apparently satisfied, and from that time until the suit was brought (nearly six years thereafter) the plaintiff made no claim that defendant was indebted to him. Plaintiff admits he was at defendant's house at the time stated, but denies that there was any settlement or any admission of the correctness of defendant's account, and explains his delay in bringing the suit by saying he regarded defendant as insolvent. The record discloses plaintiff did not keep any book account or written memorandum of the payments made to him.

The first group of assignments of error discussed by counsel relates to the charge of the court upon the question of settlement; counsel insisting there was no testimony from which a settlement could be found. We cannot agree with counsel. It is true the witnesses do not say it was then and there agreed the accounts should be settled in full, but it was the claim of the counsel that the purpose of the meeting was to make a settlement; that the accounts were gone over in detail; that the items and amounts were not objected to; that a small balance, if the lumber was charged at its cost, would be due defendant; that leaving the lumber out, there would be a small balance due the plaintiff; and that defendant offered to pay the money or leave the lumber, and that plaintiff requested the lumber be left, and it was left. This testimony, if believed by the jury, coupled with the fact that for nearly six years plaintiff made no claim that defendant owed him, fully justified the jury in finding there was a settlement of the accounts. What we have said disposes of the assignments of error relating to the submission to the jury of a special question as to whether there was a settlement or not. After the jury had been out for a time, they were brought into court, and an inquiry made if they were likely to agree if they remained out longer, and the foreman announced they were; but it was also said the jury had not agreed upon an answer to the special question, and inquiry was made if it was necessary to answer the special question, and the jurors were instructed they would have to go back and deliberate until they could answer the question one way or the other. While the judge was talking with the jury, the following occurred: "Mr. Smith. May I ask you to say to the jury upon whom the burden of proof would rest as to the settlement? The Court. I will state this: that the burden of proof on all the propositions necessary to recover is on the plaintiff. To entitle the plaintiff to recover, he must show there is a balance due him. If there is not a balance due him, either by reason of his having been paid or having been settled, he is not entitled to recover. I instruct you as to all the items of set-off which are disputed, the burden of proof is on the defendant. Mr. Smith. I ask the court to say to the jury, the burden of proof would not be upon the plaintiff to show there was no settlement, but the defendant coming in and claiming it, the burden is on him to prove it. The Court. I don't think it should be said now. If you have anything to be said to the court, it should be said privately. I think I shall make no change in my instructions to the jury on the burden of proof. I will permit

Digitized by Google

you to retire again to your room to consider further of your verdict." Counsel thinks he was not well treated, and that he was entitled to have his request given. The trial judge had shown a great deal of patience in the trial of this case. We have a record in it of nearly 100 pages. The learned judge had in his general charge carefully and properly instructed the jury as to the burden of proof. It is stated by counsel for defendant that they were not in court when this occurred. Be this as it may, there was no occasion for the judge to recharge the jury upon that branch of the case. It is also claimed the instruction of the court that the special question must be answered amounted to duress, and the judge had no right to say to the jury they must return an answer to the question; citing Harbaugh v. Cicott, 33 Mich. 246; Cole v. Boyd et al., 47 Mich. 98, 10 N. W. 124; Mechanics' Bank v. Barnes, 86 Mich. 645, 49 N. W. 475. In the cases of Cole v. Boyd et al., supra, and Mechanics' Bank v. Barnes, supra, the judge instructed the jury they must answer the special questions so they would be consistent with the general verdict, and it was held this defeated the object of the statute. Here no intimation was given as to how the question should be answered, but the court told the jury he would not receive any verdict until they had answered the question.

My associates are of the opinion that what was said by the trial judge was not in conflict with what is said in Harbaugh v. Cicott, supra, and was not error. The record discloses that in the trial of a libel case between the parties to this suit the testimony of Mr. Hawley was taken in relation to the genuineness of defendant's signature to an exhibit which was also in evidence in this case. It was conceded Mr. Hawley was in California. Plaintiff offered the evidence given by him in the other trial. It was excluded upon objection of defendant, and error is assigned; citing Lucker v. Liske, 111 Mich. 683, 70 N. W. 421. In this case the testimony which was admitted was the testimony of a party to the litigation. This is true of another of the cases cited. An admission made by a party is always admissible against him, while in the other cases cited in this court the testimony was given in the same case upon a former trial. So far as we know, this court has never passed upon the question. My associates are of the opinion it is not necessary to pass upon it here. The testimony which was excluded did not bear upon the question of whether a settlement was made or not, and, as the jury found a settlement was made, they are of the opinion that if the testimony was admissible, its exclusion was not harmful error.

The other assignments of error have been considered, but do not call for discussion. Judgment is affirmed. The other Justices concurred.

COLE v. SHAW.

(Supreme Court of Michigan. Sept. 30, 1903.)

WILLS—ANNUITIES — LEGACIES — EXECUTORS —ACCOUNTING—NOTICE—DISCHARGE OF EXECUTRIX — EFFECT — ADMINISTRATOR DE BONIS NON—APPOINTMENT.

1. Comp. Laws, § 9334, provides that when an administrator shall be removed, or his authority extinguished, the court may commit the administration of the estate not already administered to some suitable person. *Held* that, where an executrix who was residuary legatee gave a residuary legatee's bond, and was thereafter discharged and the bond canceled without a legacy bequeathed to plaintiff having been paid, and such executrix retained the estate in her hands, plaintiff was entitled to the appointment of an administrator de bonis non.

2. Where an executrix, who was residuary legatee, obtained her discharge without filing or publishing notice of the hearing of her application, and no notice thereof was given to a legatee whose legacy the executrix had failed to pay, such discharge was no bar to the legatee's right to the appointment of an administrator de bonis non.

3. Where a will directed that the sum of $300 in money be paid to testator's sister annually for her use and support so long as she lived, in quarterly installments, such annuity should be treated as a legacy, entitling the annuitant to notice of an application for the allowance of the executor's account, under Comp. Laws, § 9441, providing that, before the account shall be allowed, notice shall be given to all persons interested in the estate.

Error to Circuit Court, Kent County; Willis B. Perkins, Judge.

Action by Martha L. Cole against Louise B. Shaw. From a probate decree in favor of defendant, affirmed on appeal to the circuit court, plaintiff appeals. Reversed.

Elvin Swarthout, for appellant. Butterfield & Keeney, for appellee.

MONTGOMERY, J. John L. Shaw died in 1900, leaving a will, in which he gave and bequeathed to his wife, Louise B. Shaw, all his real and personal estate, subject, however, to a provision for his sister, which is as follows: "It is my will and I give and direct that the sum of three hundred dollars in money be paid to my said sister annually for her use and support as long as she shall live, and that it be paid her by my executrix in equal sums of seventy-five dollars each, at the end of every three months from and after my decease." The will further directed that no inventory of his estate be required, and named his wife as sole executrix, and requested that she be required to furnish no bond. Mrs. Shaw qualified as executrix, and gave a residuary legatee's bond in the sum of $5,000, which was conditioned to pay, or cause to be paid, all debts, legacies, and charges chargeable on said estate without fraud or delay. Six months were given from the filing of the bond for proving claims. At the expiration of this period, the executrix filed a petition in the probate court, representing that all debts against the estate and all administration expenses had been closed against claims, and praying to be released and discharged as

such executrix, and to have her final bond canceled. No notice of the filing of this petition, or of any hearing thereon, was published, and no notice was given to the legatee. On the same day the petition was filed, the probate court entered an order discharging, exonerating, and acquitting the executrix from all liabilities and troubles concerning her trust, and canceling the official bond, and revoking the letters testamentary that were granted. The bond itself was delivered up and removed from the files. Learning of this action something like a year after it was had, the petitioner filed her petition in the probate court, asking that the residuary legatee be compelled to file a new bond, and, in default thereof, that an administrator de bonis non with the will annexed be appointed to take charge of the estate. This petition was dismissed by the probate court, and that action affirmed on appeal to the circuit court. Our statute (section 9334, Comp. Laws) provides that when an administrator shall be removed or his authority extinguished the court of probate may commit administration of the estate not already administered to some suitable person. This statute seems to apply to the present case, as it appears that the legacy provided to be paid to petitioner had not been paid, and the estate in the hands of the executrix, even though a residuary legatee bond was given, is chargeable with this legacy. Lafferty v. People's Savings Bank, 76 Mich. 35, 43 N. W. 34. It would not do to say that the order of the probate court discharging the executrix has barred the petitioner of the right to have an administrator de bonis non appointed, as the proceeding in which this action was taken was one to which she was not a party. She had no notice of the proposed action, nor is there any finding of the court that the legacy provided for in the will has been paid. Petitioner's rights were in no way considered, and it is difficult to see how without notice they could have been adjudged in that proceeding. If we assume that the court had power to discharge the executrix, there was no power to relieve the estate from the payment of the legacy, and any attempt to do so without notice to the legatee would be an act without jurisdiction. Buss v. Buss' Estate, 75 Mich. 163, 42 N. W. 688.

We do not overlook the contention of defendant that this annuity is not to be treated as a legacy, but we think the language of the will is clear, and that it is a legacy, and that the legatee was entitled to notice. See section 9441, Comp. Laws; Morton v. Johnston, 124 Mich. 561, 83 N. W. 369.

The order of the circuit and probate courts will be reversed, and the case remanded, with direction to enter an order that the executrix file a new bond, in a sum to be fixed by the probate court, within 20 days from notice of such order, or that in default thereof an administrator de bonis non be appointed. The petitioner will recover costs of both courts. The other Justices concurred.

JONES v. PENDLETON.

(Supreme Court of Michigan. Sept. 30, 1903.)

REAL ESTATE AGENTS—ACTION FOR COMMISSIONS—VARIANCE.

1. A judgment for plaintiff on a declaration for commissions in effecting a sale of real estate at defendant's request is not sustained by evidence that he entered on negotiation for a sale to D., and before a sale was effected, defendant made a new agreement to pay him a commission if a sale to D. was effected by any one, and that such a sale was thereafter made by another.

Error to Circuit Court, Wayne County; Robert E. Frazer, Judge.

Action by James A. Jones against Edward W. Pendleton. Judgment for plaintiff. Defendant brings error. Reversed.

John D. Conely (W. C. Stuart, of counsel), for appellant. Chamberlain & Guise (M. J. Lehman, of counsel), for appellee.

MONTGOMERY, J. The plaintiff sued, in an action of assumpsit, to recover commissions upon a sale of real estate of defendant. The declaration was for money due for commissions payable to the plaintiff for services rendered in and about effecting a sale by the plaintiff, at the request of the defendant, of a certain piece of real estate, etc. The bill of particulars follows the declaration, and is for commissions on sale of real estate. The evidence adduced on the part of plaintiff tended to show that defendant placed the real estate in question in his hands for sale at a price of $35,000; that defendant thereupon entered into negotiations with various parties, and among others a Mr. Devlin; that Mr. Devlin was unable to raise the money to pay $35,000; that plaintiff endeavored to secure a loan of this amount on the property, but had failed to do so; that he had applied to various parties, but found no one willing to make a loan to that amount. At this stage the negotiations appear to have been arrested by the plaintiff's illness. Another real estate agent, Mr. Hannan, approached the plaintiff, and proposed that if he would divide commissions, he could effect a loan, and enable Devlin to make the purchase. This plaintiff refused to do. His testimony tends to show that while he was ill at his residence, the defendant called upon him, and told him that other parties were trying to effect a sale to Devlin, but that he need have no concern; that if a trade was made with Devlin, the plaintiff should have his commissions, and to keep quiet, and not worry about it. This testimony was denied on the trial, but the case went to the jury, and the jury found in favor of the plaintiff. A sale was made to the representative of the Pridgeon estate, who on the same day sold to Devlin. The circuit judge instructed the jury that if the contract was completed and the cash was procured, not through the intervention of Jones, but through the intervention of some other party, then the plaintiff

Digitized by Google

had failed to make out his case, and could not recover. In stating the plaintiff's claim in another part of the charge, the court said: "He claims, also, that this sale—this transaction—was to be a transaction upon which he was to receive his commission, and that Mr. Pendleton recognized the fact that he had done a certain amount of labor in the pursuance of this agreement, and that he had agreed to pay him for this arrangement, and that he had agreed to pay him his commission, at all events, if a certain person was the purchaser. I believe that man's name was Devlin." It would appear that the jury acted upon the plaintiff's claim, rather than upon the instruction to the jury. So far as we discover, there was no evidence in the case which justified the submission to the jury of the question whether the plaintiff had in fact effected this sale. The declaration and bill of particulars did not leave the case open for a recovery upon any other theory, and therefore the case should not have been submitted to the jury. According to the plaintiff's testimony, he had entered upon negotiations under a contract, and at a certain stage of his negotiations, he not yet having effected a sale, a new agreement was made, by which defendant undertook to pay his commissions, in case any sale should thereafter be effected, to Devlin. The testimony does not show a sale by plaintiff thereafter to Devlin, but a sale through the intervention of another agent, and this modified agreement should have been counted on if the plaintiff sought to recover upon that theory.

Judgment will be reversed, and a new trial ordered.

CARPENTER, J., took no part in the decision. The other Justices concurred.

WEISE v. ANDERSON.

(Supreme Court of Michigan. Sept. 30, 1903.)

DEEDS—CONSTRUCTION AS MORTGAGE—GRANTEE—POSSESSION—RENTS AND PROFITS—ACCOUNTING—REMEDIES—EQUITY.

1. Where plaintiffs alleged that deeds to certain real estate were given merely as security for the price of corporate stock sold to defendant, and not as payment, and it appeared that plaintiff had been in possession of the property conveyed and had received the rents and profits thereof for more than six years, he was not entitled to maintain a suit at law to recover the price of the stock on tendering a reconveyance of the land, without accounting for the rents and profits so received.

2. Where a grantee of certain land, who had been in possession and received the rents and profits for several years, alleged that the deed was a mortgage given only to secure the price of certain corporate stock, his remedy was in equity to have the deed declared a mortgage, and an accounting of the rents and profits, and not an action at law to recover the price of the stock.

Error to Circuit Court, Wayne County; George S. Hosmer, Judge.

Action by Carl Weise against Andrew Anderson. From a judgment in favor of plaintiff, defendant brings error. Affirmed.

In the summer of 1895, plaintiff, defendant, and two others agreed to organize a corporation to manufacture matches in the city of Detroit. The agreement rested in parol. One was to receive $5,000 of the stock for his practical knowledge as a matchmaker, and the others were to put in money. When the company was actually organized, plaintiff, according to his own statement, had advanced $6,143.90, defendant had advanced $15,800, and the other corporator $16,500. The capital stock was $60,000. Defendant subscribed for $20,000, one Reese $25,000, the plaintiff $10,000, and the other stockholder received stock to the amount of $5,000. Each of the three gave his note to the corporation for the difference between the amount actually paid in by him and the par value of his stock. Defendant claims that plaintiff put in only $5,640. The difference, however, is immaterial. Operations were commenced in October. About three weeks afterwards, the building was burned. Some of the stock, and a large portion of the machinery and other materials, were saved. The value of the property saved is in dispute. The highest estimate of the value of the entire property after the fire was about $14,000. A meeting of the stockholders was held immediately after the fire to consider the situation. Defendant wanted to rebuild, and go on with the business. Plaintiff declined, saying he had no more money to invest. Negotiations were then entered into between plaintiff and defendant for the purchase of plaintiff's stock. Defendant offered plaintiff his promissory notes for the amount he (plaintiff) had actually invested in payment of his stock. Plaintiff refused the offer, unless the notes were indorsed. Afterwards they completed some arrangement for the sale and purchase of the stock. Pursuant to the agreement, defendant conveyed by warranty deeds to plaintiff a house and lot and three vacant lots in the city of Detroit. The consideration expressed in the deed conveying the house and lot was $7,500, and in that conveying the vacant lots, $1,500. The deeds were executed December 11, 1895, were duly recorded, and the stock transferred by plaintiff to the defendant. The deed of the house and lot was subject to a mortgage of $2,000. There was also another mortgage of $1,000 upon it at the time, but that was subsequently paid by the defendant, discharged, and does not now affect the rights of the parties. Plaintiff immediately took possession of the land conveyed by defendant to him, has rented it, received the rents, and paid the taxes. On May 28, 1897, plaintiff conveyed the land to his brother, Paul Weise, for a recited consideration of $6,000. Plaintiff testified that he actually received this amount from his brother. On the same day his brother gave to him a land contract, agreeing to sell to him

Digitized by Google

the house and lot for $2,500. On the same day his brother also conveyed the other lots to plaintiff and his wife by quitclaim deed as joint tenants, with right of survivorship. With some of the money received from his brother, plaintiff paid the $2,000 mortgage upon the house and lot, and procured its discharge. With the title to the land in this condition, plaintiff, in 1901, nearly six years after the transaction, brought this suit at law to recover the purchase price of the stock sold by him to the defendant. His claim is that he sold the stock to defendant for the amount he had put in, and that he took the deeds simply as security. The claim of the defendant is that he conveyed the lands in full payment for the stock. The case was tried twice, without any change in the condition of the title to the land. After the testimony had been closed on the second trial, the court opened the case, and permitted the plaintiff to tender in court a quitclaim deed from plaintiff and his wife to defendant of the house and lots, and an assignment by plaintiff and his wife to the defendant of all rights and interests under the land contract, and also a deed from his brother, Paul, and his wife to the defendant, conveying the same property, accompanied by the statement that the deeds "may be accepted on the payment of the $2,000 incumbrance on the property." The court directed a verdict for the defendant, for the reason that when this action was commenced plaintiff had no cause of action enforceable at law.

Corliss, Andrus, Leete & Joslyn, for appellant. Edwin Henderson (Allan H. Frazer, of counsel), for appellee.

GRANT, J. (after stating the facts). Aside from the deeds executed by the plaintiff to the defendant, and by the plaintiff to his brother, and the land contract, the transactions between all the parties rest entirely in parol. The instruments themselves are consistent only with an absolute sale. The value of his interest as a stockholder in the tangible assets of the corporation at the time he transferred his stock was about $2,000. Plaintiff and defendant were both business men, and understood the nature and effect of the deeds which were given and received. For nearly six years plaintiff was in possession of the property, dealing with it as his own, and finally conveying the title thereto by warranty deed. The deed of the lots by plaintiff to his brother, and on the same day a reconveyance of these same lots to plaintiff and his wife, as tenants by the entirety, is very nearly conclusive that the deeds from defendant to plaintiff and from plaintiff to his brother were not intended as mortgages. If, however, it be conceded that the testimony in his behalf was sufficient to raise a doubt as to whether the deeds were in fact mortgages, still it must be held that plaintiff is not entitled to a reversal of the judgment. Under his own theory, he was a mortgagee in possession, under a conveyance upon its face a warranty deed. For nearly six years he controlled the land, leased it, conveyed it, and received the rents and profits. Even if he could maintain a suit at law, it was his legal duty to account for the rents and profits he had received from the use of the property, and to place the defendant in statu quo. There is no testimony to show how much he received, or how much he expended. Furthermore, a deed conveys the legal title to the grantee. When either party claims that it was, in effect, a mortgage, the usual remedy is by bill in equity to have it so declared. This is the proper remedy, especially in a case where there must be an accounting for rents and profits. It is true that the question may sometimes arise in a suit at law, as where the grantor sues the grantee for the purchase price. Kellogg v. Northrup, 115 Mich. 327, 73 N. W. 230. No such case is presented by this record.

The direction of the circuit judge was correct. Judgment affirmed. The other Justices concurred.

GOULD v. W. J. GOULD & CO.

(Supreme Court of Michigan. Oct. 6, 1903.)

CORPORATIONS—AUTHORITY OF PRESIDENT AND SECRETARY TO MAKE NOTES—EVIDENCE—SUFFICIENCY.

1. In an action on a note, the maker, a corporation, denied its execution, and also denied that it received any benefit from its consideration. Plaintiff only proved that the signature of the corporation was made by its president and its secretary and treasurer. The purposes of the organization of the corporation were not disclosed. *Held*, that the execution of the note was not sufficiently proved.

Error to Circuit Court, Wayne County; Robert E. Frazer, Judge.

Action by Lona M. Gould against W. J. Gould & Co. Judgment for plaintiff, and defendant brings error. Reversed.

Graves, Hatch & Millis, for appellant. Dickinson, Stevenson, Cullen, Warren & Butzel, for appellee.

MONTGOMERY, J. The defendant is a corporation, but the record does not disclose the purposes of its organization. The present action is based upon a promissory note of $4,000, purporting to be signed "W. J. Gould & Co., C. H. Gould, L. F. Thompson." The defendant filed an affidavit denying the execution of the note, and denying that the defendant had any benefit from the consideration of the same. On the trial the plaintiff proved that the signature "W. J. Gould & Co." was made by C. H. Gould, and that he was president and L. F. Thompson was secretary and treasurer of the corporation at the date of the note. There was no showing that any consideration passed to defendant, nor that the president and secretary were held out as having authority to make notes,

Digitized by Google

nor that they were, by any action of the directors, authorized in this instance to make the note in question. It was objected that the authority of these officers to make the note was not shown, and that, as a consequence, the execution of the note by the corporation was not proved. The note was, however, received in evidence against defendant's objection, and this ruling presents the principal question in the case.

The general rule is that the president of a corporation has no implied power to bind the corporation by his signature to commercial paper, and that this power is not presumptively greater in the president and secretary. Am. & Eng. Enc. L. (2d Ed.) 859. See, also, Clark & Marshall on Corporations, § 701; Cook on Corporations (4th Ed.) 716. It is true that the authority to transact business of this character may be implied where it is shown either that the president has been held out as having charge of the business, and as authorized to perform such an act on behalf of the corporation as that in question, or where the corporation is shown to have received and retained the benefits of the transaction. See Thompson on Corporations, § 4623. So where the instrument is under the seal of the corporation, a presumption arises that it was executed by authority. Id. It is also true that where there is evidence showing that the president of a corporation is engaged in managing the business, such powers will be ascribed to him as are requisite in the conduct of the business of the character involved. See Ceeder v. Lumber Co., 86 Mich. 541, 49 N. W. 575, 24 Am. St. Rep. 134; Hirschman v. Railway Co., 97 Mich. 384, 56 N. W. 842. But the ruling of the circuit judge in the present case apparently rests upon the idea that the president and secretary are presumed to have authority to execute commercial paper, and that proof that commercial paper was signed by them shifts the burden of proof upon the defendant. We think this holding cannot be sustained upon authority. The only Michigan case tending to support this ruling is Iron Works v. Bresnahan, 60 Mich. 332, 27 N. W. 524. But in that case it appeared that, not only was the mortgage in question signed by the secretary and treasurer and president, but that the mortgage was agreed upon and assented to by all the directors and stockholders of the company assembled together and the mortgage was drafted and executed in their presence. The case, therefore, did not rest upon any presumption of authority. We are cited to the case of Patterson v. Robinson, 116 N. Y. 193, 22 N. E. 372, in which language is used apparently sustaining the ruling of the circuit judge in the present case. But from the examination we have been able to give the subject, that case would appear to stand alone, and for an understanding of the New York rule should be compared with Bank v. Church, 127 N. Y. 361, 28 N. E. 29. In what we have said above we by no means imply that the court will not take judicial notice of the usual powers of certain officers of particular corporations, such as bank cashiers. But the ruling below cannot be sustained on any such presumption. The execution of the note in question was not sufficiently proved. The other questions presented are not likely to arise on a new trial.

Judgment is reversed, and a new trial ordered. The other Justices concurred.

LOTHROP et al. v. DUFFIELD.

(Supreme Court of Michigan. Sept. 30, 1903.)

GUARDIAN AND WARD—PROCEEDINGS FOR ALLOWANCE OF ATTORNEY'S FEES—JURISDICTION — ENJOINING ENFORCEMENT OF VOID ORDER.

1. The probate court, or any other court, has no jurisdiction of a proceeding against a ward's estate by an attorney to establish a claim for compensation for services rendered, even with consent of the guardian, he having no contract relations with the ward; his remedy is against the guardian, unless he proceeds with her consent, in probate court, through the medium of her account.

2. The circuit court has jurisdiction of a suit to enjoin enforcement of an order of the probate court, made in a proceeding of which it had no jurisdiction, making an allowance against a ward's estate to an attorney for services.

3. The court, having assumed jurisdiction of a suit to enjoin enforcement of an order, may, defendant having pleaded to the merits, grant the relief, though adequate relief might be obtained at law.

Appeal from Circuit Court, Wayne County, in Chancery; George S. Hosmer, Judge.

Suit by George Van Ness Lothrop and others, infants, by their next friend, Isabella G. B. Lothrop, against Henry M. Duffield. Decree for complainants. Defendant appeals. Affirmed.

Otto Kirchner, for appellant. Angell, Boynton, McMillan & Bodman, for appellees.

HOOKER, J. The complainants comprise several infants and their guardian. They file this bill to set aside an order made by the judge of probate allowing to the defendant a sum therein mentioned as attorney's fees for services rendered in relation to securing for the complainants, from other descendants of their common ancestor, a concession by which their shares of the grandfather's estate were materially increased. The petition is entitled in the estate of the minors, and prays the allowance to the petitioner of reasonable compensation for his services. It states briefly the nature of the services rendered, and the amount of time spent, but claims no specific sum. The petition bears the following indorsement: "In the Wayne County Probate Court. In the Estate of George V. N. Lothrop et al., Minors. Isabella G. B. Lothrop, guardian of said minor children, answering the within

¶ 3. See Equity, vol. 19, Cent. Dig. §§ 104, 173, 174; Injunction, vol. 27, Cent. Dig. § 15.

Digitized by Google

petition, says that she has read the same and knows the contents thereof, and that the same is true of her own knowledge in many respects, and in all other respects she believes it to be true; that she is unfamiliar with the value of legal services of this character, and submits the amount thereof to the decision and judgment of this honorable court. [Signed] Isabella G. B. Lothrop, Guardian of Said Minors. Dated February 19, 1900."

The bill alleges, and the testimony tends to show, that the guardian was surprised at the magnitude of the allowance, and has no recollection of seeing or signing the petition, and that when she signed it she did not apprehend its purport and purpose. This is controverted. The bill prays that the order may be set aside, and defendant decreed to be not entitled to any compensation, that he be enjoined from further prosecuting a claim for such services, and for general relief, it being claimed that the order operated as a legal fraud upon the infants. The circuit court found that the signature of the guardian to the consent was made under a misapprehension, and decreed that the order be set aside and held for naught, and also that the prosecution of an action brought thereon in the circuit court for the county of Wayne be enjoined, but without prejudice to the right of the defendant to make a further application to the probate court in relation to the matter in controversy.

We are of the opinion that the proper practice was not followed in obtaining the order complained of. There was no privity of contract between these infants and the defendant. Whatever contract relations he had were with their guardian, who could not bind the infants personally or their estate by contract (except by authority of the probate court, in accordance with law), so as to subject their estates to claims filed by third parties for expenses incurred by the guardian. The practice has generally been for the guardian or executor to pay or incur such obligations, and include the amounts in his account against the estate. In Jones v. Brewer, 1 Pick. 317, it is said that, "It is a well-settled general principle that a guardian cannot by his contract bind the person or estate of his ward." See, also, Thacher v. Dinsmore, 5 Mass. 299, 4 Am. Dec. 61. In Forster v. Fuller, 6 Mass. 58, 4 Am. Dec. 87, it was said: "As an administrator cannot by his promise bind the estate of his intestate, so neither can the guardian by his contract bind the person or estate of his ward." Approved in Wallis v. Bardwell, 126 Mass. 366, and in Rollins v. Marsh, 128 Mass. 116, where it was held that "a contract by a guardian for the support of his ward binds the guardian, and not the ward." Bicknell v. Bicknell, 111 Mass. 265; Mass. Hosp. v. Fairbanks, 132 Mass. 414; Turner v. Flagg, 6 Ind. App. 563, 33 N. E. 1104; Stevenson v. Bruce, 10 Ind. 397; Lewis v. Edwards, 44 Ind. 333; Yourie v. Nelson, 1 Tenn. Ch. 617; Cobbey v. Buchanan, 48 Neb. 391, 67 N. W. 176; Hunt v. Maldonado, 89 Cal. 637, 27 Pac. 56. In the last-mentioned case it was said: "If the guardian made a valid contract with the attorney, he may be held liable, and if he pays it, and the probate court shall think the expenditure reasonable and necessary, it may be allowed from the ward's estate. But it is an expense incurred by the guardian in the performance of his duties, for which he is primarily liable." Fish v. McCarthy, 96 Cal. 484, 31 Pac. 529, 31 Am. St. Rep. 237. In Tobin v. Addison, 2 Strob. 3, it was said: "The guardian is responsible to every one contracting with him, and not the estate of his ward; against and with it he is to account, and debts paid for its benefit he is allowed to submit as charges against the ward." In Fessenden v. Jones, 52 N. C. 14, 75 Am. Dec. 445, it was said: "The single question presented in this case is whether a guardian, who calls in a physician to the slave of his ward, can be rightfully charged with, and made responsible for, the medicines and services rendered. The court is clearly of the opinion he may be. The credit in such case is not only in point of fact given to the guardian, but ought to have been so given. The guardian is charged with the duty of controlling and managing the person and property of the ward and judging of the expenditures which may be needful for either, and he alone is informed of the condition of the ward's resources. Hence the contract should be made with the guardian, and hence the guardian ought to be looked to for payment." Myers v. Cohn (Com. Pl.) 23 N. Y. Supp. 996; Copley v. O'Niel, 57 Barb. 299; Adams v. Jones, 8 Mo. App. 602; Lusk v. Kershow, 17 Colo. 488, 30 Pac. 62; Epperson v. Nugent, 57 Miss. 45, 34 Am. Rep. 434. "A guardian cannot, by his own contract, bind the person or estate of his ward." Sperry v. Fanning, 80 Ill. 371. "A guardian has no power to bind either the person or the estate of his ward by contract." Reading v. Wilson, 38 N. J. Eq. 446; Scott v. Porter, 44 Miss. 364; McGavock v. Whitfield, 45 Miss. 453. In Dalton v. Jones, 51 Miss. 585, it was said: "The law places under the control of the guardian the property of every description of the ward charged with the duty of making it productive and of supporting the ward out of its income. The law does not leave the amount of expenditure for maintenance and education to the discretion of the guardian. This sum must be fixed by the court. If the income be insufficient, the court may order a sale of the requisite amount of property, etc. Sections 1219, 1220, Code 1871. If a guardian contracts for the education or maintenance of his ward without the sanction of the chancery court, he incurs a personal responsibility, and cannot be allowed for it in his accounts with his ward. A guardian has no power to bind the estate of his ward

Digitized by Google

without the sanction of the chancery court." Poole v. Wilkinson, 42 Ga. 539. "A guardian cannot borrow money and bind his ward therefor, nor can he, by any contract other than those specifically allowed by law, bind his ward's property or create any lien thereon." Rice v. Paschal, 59 Ga. 637; Westmoreland v. Davis, 1 Ala. 299; Simms v. Norris, 5 Ala. 42. "Demands of this nature have several times been brought before this court. It has always held that debts contracted as this was are the proper debts of the persons occupying the position of trustees, including executors, administrators, and guardians, and, when made in obedience to the duties of the trust, impose upon them a personal liability. The seller," or, we may insert, the person to whom a debt is contracted, "must look to them for payment, and they must look to the trust estate for reimbursement. This is everywhere in this country, as well as in England, held to be the law." St. Joseph's Academy v. Augustini, 55 Ala. 495. "It has been repeatedly decided in Massachusetts that a guardian has no power to bind the ward or his estate by contract." Brown v. Eggleston, 53 Conn. 119, 2 Atl. 321. Suit for counsel fees was required to be brought against the guardian, and not the ward, in Phelps v. Worcester, 11 N. H. 51. "In general, he cannot bind the person or estate of his ward." Tenney v. Evans, 14 N. H. 351, 40 Am. Dec. 194. See, also, Hardy v. Bank, 61 N. H. 34. The same doctrine is repeatedly stated in Woerner on Guardianship, pp. 164, 185, 192, 272, 281, 470.

The foregoing authorities ought to set the question at rest, although a few cases, some based on statutes and others not, hold the contrary. If it is true that the petitioner was entitled to file and have allowed this claim against the estates of the wards, it must follow that he who furnishes any article to the guardian for the benefit of the ward may harass the estate and the court with a petition for its allowance. It is as true where the claim is for a paper of pins as any other article or service. See, also, Sheahan v. Circuit Judge, 42 Mich. 69, 3 N. W. 259; Wood v. Truax, 39 Mich. 628; Bearinger v. Pelton, 78 Mich. 114, 43 N. W. 1042; Comp. Laws, § 8705; Hoga's Estate v. Look (Mich.) 96 N. W. 439.

We have not overlooked the case of Jackson v. Leech's Estate, 113 Mich. 390, 71 N. W. 846. If the impression exists that this case is at variance with the case upon the point before us, it is a mistaken one. The case arose over a final account filed by the executor, in which he, not a third person, asked an allowance for various items. A majority of the court held that as he had incurred a personal liability he was entitled to have the item allowed. The present question was not before the court, and was not passed upon directly, though there is much reason for saying that it was impliedly, and that it is in harmony with the cases cited. How otherwise could the decision rest on the ground that the executor had incurred a liability, and, if this was not personal, why should not the practice followed in the present case have been the proper one? It results from this view that the probate court has no right to entertain a claim against a ward's estate, filed by and in the name of a creditor, with whom the ward has no contract relations, and that the want of jurisdiction appears upon the face of the petition, which set the court in motion; and we may add in this connection that the same reason which precludes a recovery before the probate court, viz., a want of privity, would forbid a recovery against the ward in a suit upon the claim in a court of law, and prevent an allowance of any sum in this proceeding. The remedy of defendant is restricted to proceedings against the guardian unless he proceeds with her acquiescence, in probate court, through the medium of her account. Counsel claim that there is no proper ground for intervention in this case, inasmuch as no fraud is shown.

Bills to impeach decrees are not limited to cases of fraud, but such relief may be based on other grounds. Adams, Equity, 196. Upon page 419 the author says: "It has been also said that where an improper decree has been made against an infant, without actual fraud, it ought to be impeached by original bill. When a decree has been made by consent, and the consent has been fraudulently obtained, the party grieved can only be relieved by original bill." See, also, Pomeroy's Eq. §§ 836, 837. "When an improper decree has been rendered against an infant, either with or without actual fraud or surprise, the remedy should be by original bill." 3 Enc. Pl. & Pr. 612. The above statement of the text is supported by the citation of many authorities.

There can be little doubt that this order was improperly taken. Aside from the jurisdictional question, the record shows that the action of the court was predicated upon a consent by the guardian to submit the amount to the judgment of the probate court. Under numerous authorities, she could not bind the wards by a consent to the decree or amount, even if such consent were given in open court. Conant v. Kendall, 21 Pick. 36; Wade v. Bridewell, 38 Miss. 420; Hite's Ex'r v. Hite's Legatees, 2 Rand. 409. A confession of judgment made by a mother in her capacity as tutrix of her minor child is not binding on the minor or his property. Metcalf v. Alter, 31 La. Ann. 389; Gooch v. Green, 102 Ill. 513; Wood v. Truax, 39 Mich. 628. In the latter case it was said: "The court is bound to guard the interests of infant litigants, whether protected by their guardian or not."

It is also urged that the court of chancery has not jurisdiction to set aside this order; that the most it could do in any event would

Digitized by Google

be to make a restraining order, which should be operative against the defendant. It is the general rule that one court cannot restrain the action of another court, and has no power in a collateral proceeding to prevent the enforcement of its orders, judgments, and decrees. Nevertheless it is an every-day occurrence for courts to consider and adjudicate the question of validity of the proceedings of other courts, and declare them void. That we may do here, and, while decisions are numerous which profess to vacate and set aside decrees of other courts, it may be that in the absence of statutory authority the better practice is to restrain the party from enforcing such decrees. That is an adequate remedy here, and the prayer of the bill is sufficiently broad to warrant such decree.

It is said that if this order is void, the bill should be dismissed upon the ground that the defense might be made in an action at law. A sufficient answer to this claim is that the court has assumed jurisdiction upon a record where counsel have pleaded to the merits, and may in such case retain it to grant relief, though it may be clear that adequate relief might have been obtained at law. See 11 A. & E. Enc. of Law, and cases cited.

The complainant may take a decree adjudging such order null and void, and for an injunction restraining the enforcement of the same, and restraining the beginning or continuing any proceedings at law upon said claim for services against the infant complainants, but without prejudice to any proceedings against the guardian of said wards, or the presentation by her to the probate court, for allowance, of an account including said claim. Complainants will recover costs of both courts.

CARPENTER, J., did not sit. The other Justices concurred.

LESLIE v. JACKSON & S. TRACTION CO.

(Supreme Court of Michigan. Oct. 6, 1903.)

CARRIERS OF PASSENGERS—PERSONAL INJURY—DECLARATION—PROOF OF INJURY—NEGLIGENCE—EVIDENCE — INSTRUCTIONS — REMARKS OF COUNSEL—HARMLESS ERROR.

1. In an action by a passenger for injuries sustained by reason of the car running through an open switch, the declaration alleged that defendant's negligence consisted in want of reasonable care, in not having the switch properly adjusted, in not keeping the implements used in adjusting it so that children and others could not improperly use them to move the switch, in running the car at a high rate of speed, and in failing to approach the switch with the car under control. It was shown that the switch was at a public place, where many children congregated; that it was not fastened; that it was opened by any one desiring to do so by the use of a bar left there by defendant; that the car approached the switch at a rate of 15 or 20 miles an hour; and that some one had thrown the switch open. *Held*, that the evidence was sufficient to require the submission of the case to the jury.

2. In an action for injuries sustained by a passenger by reason of the car running through an open switch, the declaration alleged that plaintiff was thrown on the ground; that he was thereby bruised, hurt, and wounded, sustaining a concussion of the spine, and injuring the tissues and nerves in the gluteal region of the right hip, causing a wasting of the right leg, and the nerves, muscles, and tissues thereof, permanently disabling him from manual labor; that he suffered great pain and anguish of mind and body; and that he became sick, sore, lame, and disordered. *Held* to authorize proof relative to neuritis of the sciatic nerve.

3. Where, in an action for personal injuries, a pre-existing injury was shown, which was caused by plaintiff falling on ice, which had not prevented him from working, and which affected the hip joint and left leg, but not his back, an instruction that plaintiff could not hold defendant liable for the effects due to the former condition, or its growth or development, and that plaintiff was entitled only to such damages on account of decreased earning power as, in accordance with his former condition, the jury should consider just, properly and sufficiently stated the law.

4. The remark of counsel, in his argument to the jury, that the witnesses for the adverse party were "cattle," though highly improper, does not constitute prejudicial error, where the court stated that he would not make such remarks, and where counsel thereupon retracted, and his associate stated that he did not think counsel intended to say the men were cattle.

Grant, J., dissenting.

Error to Circuit Court, Jackson County; Erastus Peck, Judge.

Action by Stephen W. Leslie against the Jackson & Suburban Traction Company. Judgment for plaintiff, and defendant brings error. Affirmed.

Thomas E. Barkworth and Worrall Wilson, for appellant. John F. Henigan (Charles A. Blair, of counsel), for appellee.

MOORE, J. On June 18, 1901, plaintiff was a passenger on one of defendant's cars. The car ran through an open switch at the intersection of Page avenue and Railroad street. The plaintiff received severe injuries. He brought this suit, and recovered a judgment. The defendant brings the case here by writ of error. The negligence charged may be briefly stated: First, "want of reasonable care, in not having the switch properly set and adjusted, and in not keeping the implements used by its servants and employés in setting and adjusting the switches so that children and others might not get them and improperly use them, and that some child or other person took the implement and moved the switch; second, the failure to have the switch properly set and adjusted, and the running at a high rate of speed when the switch was adjusted for Railroad street instead of Page avenue; third, the failure to approach the switch with caution and with the car under control."

It is claimed there was no testimony that would warrant the submission of the case to the jury under any of these claims. Page avenue runs east and west. Railroad street runs in a northerly direction. Leading from

Digitized by Google

Page avenue to Railroad street was a switch connecting the track on Page avenue with the track on Railroad street, which was constructed only a few rods on Railroad street. It is claimed by plaintiff that this switch is at a public place where a good many children, and especially boys, congregate; that it was not fastened; that it was opened and closed by the use of a small iron bar, which was habitually left by the employés of the road on the ground near the switch, where anybody who desired to do so could take it and open the switch; that upon the date in question the car approached this switch at a rate of 15 or 20 miles an hour; that some one had thrown the switch open, making a curve in the track, which fact the motorman did not observe, and, as a result thereof, plaintiff received severe injuries. This case was tried before the opinion was handed down in the case of Noe v. Rapid Railway Co. (Mich.) 94 N. W. 743. The facts disclosed in this case show a much greater degree of negligence than was disclosed in the case of Noe v. Railroad Co., supra, and we think there was a case for the jury.

It is claimed the court erred in admitting testimony relative to the neuritis of the sciatic nerve, because it was not averred in the declaration. The averment is: "And thereby the plaintiff was then and there violently thrown to and upon the ground there, and was thereby greatly bruised, hurt, and wounded, and sustained a severe concussion of the spine, and the tissues and nerves in the gluteal region of the right hip were severely bruised and injured, causing a great wasting and shrinking of the right leg, and the nerves, muscles, and tissues thereof; and he has become permanently disabled from performing manual labor * * * from thence hitherto, and has suffered great pain and anguish of mind and body, and will continue to so suffer in the future, and became and was sick, sore, lame, and disordered, and so remained for a long space of time, to wit, from thence hitherto," etc. We think the declaration was broad enough to admit this testimony under Johnson v. McKee, 27 Mich. 471, and Montgomery v. Railway Co., 103 Mich. 46, 61 N. W. 543, 29 L. R. A. 287; Strudgeon v. Sand Beach, 107 Mich. 496, 65 N. W. 616; McKormick v. West Bay City, 110 Mich. 265, 68 N. W. 148; Snyder v. Albion, 113 Mich. 275, 71 N. W. 475; Beath v. Railway Co., 119 Mich. 512, 78 N. W. 537; Fye v. Chapin, 121 Mich. 675, 80 N. W. 797.

It is claimed the court erred in declining to give the following request: "The plaintiff is not entitled to recover for defects which existed before the accident, and your verdict must not ignore these conditions. Whatever effects in his present situation are due to such former condition, or its growth or development, plaintiff cannot hold defendant liable for; and, in awarding damages, if you should find that the negligence of the defendant is established, nothing should be allowed on account of any conditions which grow out of or connected with the former defects." The judge charged the jury upon that subject as follows: "In considering the question of damages, I instruct you that plaintiff is not entitled to recover for defects which existed before the accident, and your verdict must not ignore these conditions if you find such conditions existing. Whatever effects in this present situation are due to such former conditions, if any, or its growth or development, plaintiff cannot hold defendant liable for; and, in awarding damages, if you should find that the negligence of the defendant is established, nothing should be allowed on account of any conditions which grew out of, or are connected with, the former defects, if any. The plaintiff is only entitled to such damages on account of decreased earning power as in accordance with his former physical condition you considered just, and you are at liberty to disregard the depreciation thereof if you find it existed prior to the accident, arising out of the previous physical defects of the plaintiff." The pre-existing injury, and its nature and extent, are substantially stated in the following excerpt from the testimony of said plaintiff: "The injury occurred when I was fourteen years old, in Wood county, Ohio. It was caused by falling on the ice. I have not been prevented from working, as a result of that injury, since I have been here. * * * The injury affected my hip joint or leg. It was not my right leg. It was my left one. It did not affect my back. Of course, it was jarred in that joint. I didn't say that it threw me over when I got tired. I said I stood stooped to rest myself. Just changed my position the same as you would if you were tired. It was not because of weakness in my back." We do not think, under the proofs, there was any failure to properly state the law.

One other question calls for attention. During Mr. Henigan's argument, he characterized some of the defendant's witnesses as cattle, to which Mr. Barkworth asked an exception. "The Court: I hardly think I would make those remarks. I would hardly class them as cattle. Mr. Henigan: I will retract that. Mr. Barkworth: I don't think the judge's remark cures the error. I don't want to waive my exception. Mr. Blair: I don't think Mr. Henigan intended to say the men were cattle." We are all agreed the remarks of counsel were highly improper, and deserved a much severer rebuke than was given by the trial judge. Witnesses attend court in response to subpœnas, and are entitled to consideration, instead of vituperation. If there is anything in the testimony of the witness which calls for criticism, it is always proper to make it, but it does not justify calling him opprobrious names. If counsel had any purpose in designating the witnesses as cattle, it must have been to prejudice the jury against them. If we were sat-

Digitized by Google

isfied that purpose had been accomplished in this case, we should not hesitate to reverse it for that reason. We are of the opinion, however, that, with the average juror, language of this character is not likely to have the effect expected by the one who utters it. When taken in connection with what was said by the judge and by the counsel associated with the attorney who uttered it, we are not satisfied the occurrence worked harm to the defendant.

The other questions raised by counsel have been examined, but we do not deem it necessary to discuss them.

Judgment is affirmed.

HOOKER, C. J., and CARPENTER and MONTGOMERY, JJ., concurred.

GRANT, J. (dissenting). I think the record shows that the plaintiff made a case proper to be submitted to the jury, under the majority opinion in Noe v. Rapid Railway Co. (Mich.) 94 N. W. 743. But I think the judgment should be reversed for another reason. The attorney for the plaintiff, in his argument to the jury, called the defendant's witnesses "cattle." The attorney for the defendant properly took an exception, when the court said: "I hardly think I would make these remarks. I would hardly class them as cattle. Mr. Henigan: I will retract. Mr. Barkworth: I don't think the judge's remark cures the error. I don't want to waive my exception." Counsel do not make such remarks to juries unless they think that they and their clients will profit thereby. It is true that such unjustifiable and uncalled-for remarks ought to be prejudicial to the cause of the one in whose interests they are made. But courts have universally recognized the fact that counsel make them for a purpose, viz., to prejudice the jury. Courts cannot say that that purpose has not been accomplished, and have, as a rule, reversed judgments for the use of such language, unless the court has promptly rebuked the attorney, and so instructed the jury as naturally to counteract the poison of the language. The language in this case deserved a prompt and severe rebuke. So far from the language of the court being a rebuke, I think it rather added to the sting. Such mild language would rather convey the idea that there was some doubt in the mind of the judge as to the impropriety of the language. Nor do I think that the retraction took away the sting. It is one of those cases where the courts hold that the effect of the language is not removed by a retraction. If it be the rule that a retraction is the antidote, attorneys disposed to indulge in such unprofessional conduct will, for the sake of the effect upon the jury, use the language, and then say they retract it. The only proper antidote is the prompt and sharp rebuke of the presiding judge, and an instruction to the jury.

MALE v. CHAPMAN.

(Supreme Court of Michigan. Oct 6, 1903.)

PUBLIC LANDS — CLAIMS — CONFIRMATION — GENERAL EXEMPTIONS—CONSTRUCTION—LACHES—NOTICE.

1. The commissioner of the general land office, pursuant to the provisions of Act Cong. Sept. 26, 1850, c. 69, 9 Stat. 469, providing for the settlement of claims for land at Sault Ste. Marie, confirmed a claim for land, but excepted certain specific claims "and any other valid adverse claim which may be found to exist within the limits hereby confirmed." *Held*, that the general exception contained in the confirmation, read in connection with the act of 1850, did not leave the claim open to contest in the courts, but the exception to valid claims meant claims found to exist by the officers empowered to act under that law.

2. A claimant to public land excepted generally from an order of the commissioner of the general land office confirming a claim in another, who allows over 30 years to elapse without moving in the matter, is guilty of laches defeating his right.

3. Where notice of hearing before the land officers for the confirmation of a claim, pursuant to the act of Congress of 1850, providing for the settlement of claims for land at Sault Ste. Marie, was given by serving a personal notice on the parties known to be interested in the claim and also by publication, the notice was sufficient, and the decision at the hearing was binding on those acquiring title after the institution of the proceedings.

Appeal from Circuit Court, Chippewa County, in Chancery; Joseph H. Steere, Judge.

Suit by William H. Male against Charles H. Chapman. From a decree for plaintiff, defendant appeals. Affirmed.

John W. Shine, for appellant. John A. Colwell (George A. Cady, of counsel), for appellee.

MONTGOMERY, J. In 1850, Congress passed an act (Act Sept. 26, 1850, c. 69, 9 Stat. 469) providing for the examination and settlement of claims for land at Sault Ste. Marie. This act provided that the register and the receiver of the land office, upon filing of claims, should proceed to take testimony as to the occupancy and rights of claimants, provided that a map should be made and transmitted to the commissioner of the general land office, and provided that the decision of the commissioner should in every case be final and binding upon the parties and government, and that he should have power to affirm or modify the decisions of the register and the receiver. There were two classes of claims provided for—one to be made by the person or the legal representatives of any person under original claims which had been entered under a previous act of Congress in 1823 (Act Feb. 21, 1823, c. 10, 3 Stat. 724), and the other the claim of any bona fide occupant who had entered upon lands and made improvements. The complainant derives his title from the owners of claim No. 131. The defendant claims to be equitably entitled to the land in dispute under a claim made by Samuel Ashmun, and

Digitized by Google

known as claim No. 59. The land in dispute in this controversy is within the boundaries of each of these claims, claim No. 59 covering a portion of the land covered by claim No. 131. The claim of Samuel Ashmun was filed December 21, 1852. On April 4, 1853, the register and the receiver recommended the confirmation of this claim, and, indeed, assumed to confirm it, but, as we have seen by reference to the act, the power of final confirmation rested with the commissioner of the general land office, and no final action confirming this claim No. 59 was had at that time, and none has since taken place. Again, in 1855, the records show that claim No. 59 was under advisement by the register and the receiver, and that it then was understood to be in conflict with claim No. 131 and other claims. The report favoring the allowance of claim No. 59 was made by the receiver alone, the register being disqualified. The receiver also reported favorably on claim 131, but gave it a width of only 45 links, which would leave it without conflict with claim 59. Claim No. 131 came before the commissioner for confirmation on the 10th of July, 1858. At this time the claim was confirmed for land within certain metes and bounds, including the land here in controversy, excepting from the land specifically certain claims by number, "and any other valid adverse claim which may be found to exist within the limits hereby confirmed; the exceptions herein, special and general, under this No. 131, being hereby expressly excluded from the confirmation and limits of said claim No. 131." Claim No. 131, as allowed, had a width of 4 chains. The boundaries of 131 included the whole or a portion of claims 54, 55, 56. 57, 58, 59, 60, 61, 62, 63, 70, and 71, and all of these claims were excepted from the confirmation in terms and by number, excepting claims 57, 58, 59, and 61, and one of the questions involved in this case is whether, in view of the express designation of these excepted pending claims, the general exception contained in the confirmation of No. 131 should be held to include claim No. 59, then known to be a pending claim, in conflict with claim 131. But the confirmation was not allowed to rest here. On May 1, 1862, Samuel Ashmun, Stephen R. Wood, Julia Hopkins, and Samantha Johnson made application to have the adjudication on claim 131 opened, and a rehearing granted. It is asserted in the affidavit of Ashmun that claim No. 131 includes the house and lot where he settled and erected his house on his arrival at the Sault, the same used and occupied by him personally for almost 20 years, and also the one since occupied by him up to the present time. On the rehearing, Samuel Ashmun, in his claim before the register and the receiver, did not assert a claim under 59, but made another claim under No. 60, and, after releasing a portion of that, had the remainder confirmed to him, and an order was made confirming land claim No. 131, except as to the portions allowed to Ashmun and other contestants on this hearing. The record shows that personal notice of this hearing was given to all parties known to be interested in claim No. 131, and also notice by publication. It is contended by complainant that this determination on the rehearing concludes Samuel Ashmun and his grantees. On the other hand, it is contended that, as Samuel Ashmun had at this time parted with his title, and as the statute does not in terms provide for notice by publication, the decision does not conclude the purchaser. The facts, as they appear, are that, shortly after the action of the register and the receiver in 1853, Samuel Ashmun conveyed claim No. 59 to Silas H. Ashmun by deed with warranty against all lawful claims except the United States. Silas H. Ashmun never intervened in the proceeding before the register and the receiver or the commissioner of the general land office. So far as the record discloses, none of these officers had knowledge of Silas H. Ashmun's claim. From the time of the transfer to the date of filing this bill, no proceedings had been taken by him or his grantees, either to secure a confirmation by the commissioner of claim No. 59, or to intervene in claim No. 131. The general exception contained in the confirmation of claim No. 131 must be read in connection with the act of 1850, and, having in view the purposes of this act, it was clearly not the intention to leave the claim open to contest in the courts, and the exception of valid claims found to exist means claims found to exist by the officers empowered to act under the terms of that statute. Silas H. Ashmun and his grantees have allowed a third of a century to elapse without moving in this matter, and it seems to me that laches alone constitute a sufficient answer to defendant's claim. But more than this, I think it clear that all the notice that the case was susceptible of was given of the rehearing in 1862. Personal notice was served upon the parties appearing by the record to have an interest, and, in addition to this, notice was published. By analogy to an action at law, the final determination in this proceeding would be binding upon those who acquired title after the institution of the proceedings. 24 Am. & Eng. Enc. p. 748.

The circuit judge made a decree affirming complainant's title, and this decree is affirmed, with costs. The other Justices concurred.

GREEN et al. v. GRANT.

(Supreme Court of Michigan. Sept. 30, 1903.)

MORTGAGES—COVENANT TO PAY TAXES—USURY.

1. A tax assessment against a mortgagee, based on his mortgage, is within the mortga-

¶ 1. See Mortgages, vol. 35, Cent. Dig. § 527.

Digitized by Google

gor's covenant to pay all assessments "on or on account of the mortgage or the debt secured thereby."

2. Under Pub. Acts 1899, No. 207, p. 323, making it lawful to stipulate for payment of interest not exceeding 7 per cent. per annum, and Comp. Laws 1897, § 4857, providing, if it appear that a greater rate of interest has been directly or indirectly reserved, taken, or received than is allowed by law, the debtor shall not be compelled to pay any interest, an agreement of the debtor to pay 5 per cent. interest, and, in addition, all taxes levied against the creditor on account of the debt, is not usurious if the creditor did not know at the time the contract was made that the taxes would exceed 2 per cent., and in such case, though they do exceed 2 per cent., the whole amount can be enforced against the debtor.

Hooker, C. J., dissenting.

Appeal from Circuit Court, Bay County, in Chancery; Theodore F. Shepard, Judge.

Suit by Mary E. Green and others against Emeline M. Grant. Decree for complainants. Defendant appeals. Affirmed.

John L. Stoddard, for appellant. Simonson, Gillett & Clark, for appellees.

CARPENTER, J. This is an appeal in chancery from a decree for the foreclosure of a mortgage. The mortgage was given by defendant to complainants under date of December 11, 1899, to secure a loan for $12,000. It contained a covenant by the mortgagor to pay all taxes and assessments levied upon the mortgaged property, "or upon or on account of this mortgage or the indebtedness secured hereby, or upon the interest or estate in said lands created or represented by this mortgage or by said indebtedness, whether levied against said mortgagor, her legal representatives or assigns, or otherwise." Another paragraph gave the mortgagees the usual right to pay these taxes in default of their payment by the mortgagor, and to add the sums so paid to the mortgage debt. The only question in dispute between the parties is as to whether these clauses imposed upon defendant, as mortgagor, the liability to pay the personal mortgage taxes assessed against complainants in 1900 and 1901. In order to narrow the controversy as far as possible, defendant, prior to the filing of the bill, paid all sums claimed to be due for principal and interest exclusive of taxes, and complainants released all of the mortgaged property excepting one lot. A bill was then filed upon the theory that the mortgagor was in default for failure to pay the amount represented by these taxes. Defendant filed a cross-bill, framed on the theory that the mortgage was paid in full, and that the complainants were liable for the statutory penalty for failure to discharge it. The circuit judge held that the amounts paid for taxes were properly chargeable against defendant as part of the sum secured by the mortgage, and entered the usual decree of foreclosure and sale, from which the defendant appeals.

The assessment, as it appeared on the roll, was, in 1900, "Personal, $12,000," and, in 1901, "Personal $13,000." It was shown that in each instance the assessment to the extent of $12,000 was based on the mortgage in question. That this constituted an assessment "upon or on account of the mortgage or the debt secured thereby" is obvious. It is said by defendant that the assessment is against the person, because of his ownership of the mortgage; but, conceding this, the assessment is clearly "on account of" his ownership of the mortgage. See Attorney General v. Board of Supervisors, 71 Mich. 16, 38 N. W. 639.

Is the agreement to pay 5 per cent. interest and all taxes and assessments levied on account of the mortgage or the debt secured thereby—the aggregate of taxes and interest amounting to 7¾ per cent., or three-fourths of 1 per cent. in excess of the maximum legal rate—usurious? Complainants contend that the court should say as a matter of law that no agreement by the mortgagor to pay taxes on the mortgage indebtedness is usurious. Defendant contends that the court should say as a matter of law that all such agreements are usurious when the aggregate of the interest and taxes exceeds the maximum rate authorized by law. The effect of complainants' contention is to make valid agreements to pay the maximum rate of interest allowed by law and the taxes in addition thereto. The effect of defendant's contention is to make invalid all such agreements, even though at the time the agreement was made the parties to the contract supposed that the aggregate of interest and taxes would be less than the rate authorized by law. In our judgment, neither of these contentions is sound. In support of their contention, complainants rely upon the decision of this court in the case of Common Council v. Board of Assessors, 91 Mich. 78, 51 N. W. 787, 16 L. R. A. 59. It was there held that an agreement to pay the taxes imposed under the law of 1891 upon the mortgagee's interest in the estate did not render the contract usurious. The ground upon which this decision was based is therein stated as follows (see page 97, 91 Mich., p. 794, 51 N. W., 16 L. R. A. 59): "Such an agreement does not amount to a reservation of interest, but is in the nature of an agreement to preserve the estate which constitutes the security, and is no more unlawful than an agreement to keep the property insured with a similar purpose." In our judgment, that decision is inapplicable to the present case. When defendant pays a tax, as in this case, on account of complainants' ownership of the mortgage indebtedness, he is not making a payment to preserve the security, but he is paying money for the complainants' benefit, precisely as if paid directly to complainants. Nor can we approve the decision of Dubose v. Parker, 13 Ala. 779, relied upon by complainants. In that case the borrower promised to pay the tax on

Digitized by Google

the indebtedness in addition to the highest legal rate of interest allowed by the statute. The court decided that the agreement was not usurious, saying: "The law has deemed it wise and just to permit the lender to realize as profit eight per cent. per annum for the loan of his funds. By the contract in question he receives no more: The payment of the tax upon the loan is not very dissimilar from the payment of expenses for conveyances, which are usually borne by the borrower." We are bound to disapprove this reasoning. When the lender received 8 per cent. and the payment of his own taxes, he did receive more than 8 per cent. The payment of the taxes is quite different from the payment of expenses for conveyances. The payment of the tax relieves the lender from an obligation which clearly rests upon him—an obligation which did not arise by reason of the loan; while the payment of expenses for conveyances is a mere reimbursement for an outlay occasioned by making the loan. By the statement, "The law has deemed it wise to permit the lender to realize as profit eight per cent. per annum for the loan of his funds," it is obviously intended to assert that the law permits the lender to receive from the borrower the maximum rate of interest authorized by law in addition to the taxes assessed on account of his ownership. We are bound to say that the law of Michigan cannot receive this construction. The statute of this state (see Act No. 207, p. 323, Pub. Acts 1899) makes it lawful for the parties to stipulate in writing for the payment of any rate of interest not exceeding 7 per cent. per annum, and provides (see Comp. Laws 1897, § 4857): "If it shall appear that a greater rate of interest had been directly or indirectly reserved, taken or received than is allowed by law, the defendant shall not be compelled to pay any interest thereon." We should disregard sound principles of statutory construction (see Bullock v. Taylor, 39 Mich. 137, 33 Am. Rep. 356), if we decided that this statute did not forbid the lender of money exacting for its use all beneficial consideration which exceeded the maximum legal rate of interest. Complainants also refer to the case of Banks v. McClellan, 24 Md. 62, 87 Am. Dec. 594, where it was said: "We consider that the charges for taxes on the mortgage, with simple interest on each item from the time it was paid, are allowable, Mr. McClellan having agreed to pay them, and the law authorizing such payments without incurring usury." We cannot regard this case as an authority of value to complainants' position. Opposed to the case of Dubose v. Parker, and in harmony with these views, is Meem v. Dulaney, 88 Va. 674, 14 S. E. 363. There it was decided that an agreement to pay 6 per cent. interest (the maximum rate under the statutes of Virginia) and the state taxes was usurious.

Nor can we assent to the contention of defendant that a contract is usurious because the aggregate of interest reserved and taxes paid exceeds the maximum allowed by the statute. In our judgment, such a contract is not usurious per se. Whether or not it is usurious depends upon the intention of the lender. If, at the time the contract was made, he knew that the aggregate of interest reserved and taxes to be paid would exceed the statutory rate—as he would if the interest reserved was the maximum interest—the contract is usurious. If, on the other hand, at that time he believed that the aggregate of interest and taxes would not exceed the maximum rate allowed by statute, it would be as contrary to law as to good morals to declare it usurious. "It is the essence of an usurious transaction that there shall be an unlawful and corrupt intent on the part of the lender to take illegal interest, and so we must find before we can pronounce the transaction to be usurious." Condit v. Baldwin, 21 N. Y., at page 221, 78 Am. Dec. 137; Nourse v. Prime, 7 Johns. Ch., at page 77, 11 Am. Dec. 403; Bank of United States v. Waggener, 9 Pet., at page 399, 9 L. Ed. 163; Elliott v. Sugg, 115 N. C. 236, 20 S. E. 450; Varick v. Crane, 4 N. J. Ch., at page 134; Tyler on Usury, p. 103. The principle stated above is not confined in its application to cases where the interest has been paid partly in merchandise. It applies where the interest has been paid entirely in money, and that in excess of the statutory rate, where there was an intention to take no more than the legal rate. See Duncan v. Maryland Savings Institution, 10 Gill & J., at page 311; Duvall v. Farmers' Bank of Maryland, 7 Gill & J. 44. Can we say that the mortgagee in this case intended by the transaction to take unlawful interest? Did he intend that he would secure more than 7 per cent. interest upon his investment? He knew that the interest promised him was 5 per cent. If he knew that the taxes assessed on account of the mortgage indebtedness would exceed 2 per cent., the transaction was usurious; otherwise it was not. Did he know that the aggregate of taxes would exceed 2 per cent.? The record does not enable us to answer this question. We know that in many localities in this state—and we think it may be said that in most localities—the aggregate of taxes does not exceed 2 per cent. We cannot, therefore, say that the mortgagees, at the time this contract was made, knew that the aggregate of taxes would exceed 2 per cent. We are bound, therefore, to say, under the authorities above cited, that there is no such proof of an intent to take unlawful interest as justifies us in pronouncing the transaction to be usurious.

Does the conclusion that the transaction was not usurious justify us in requiring defendant to perform a contract which, in effect, compels him to pay interest in excess

Digitized by Google

of 7 per cent.? We think it does. If the contract was forbidden by law, all interest, and not merely that which exceeds 7 per cent., must be forfeited. If the contract was not forbidden by law, it is legal and enforceable according to its terms. While this particular question was not discussed in Duncan v. Maryland Savings Institution or in Duvall v. Farmers' Bank of Maryland, supra, it is to be observed that in each of these cases the borrower of money was compelled to pay interest in excess of the legal rate. In our judgment, this case cannot, as urged by our Brother HOOKER, be decided upon the presumption that the parties intended by their contract to include taxes only to an amount which, with the interest reserved, would equal 7 per cent. The express language the parties have deliberately used precludes the adoption of any such presumption. The mortgagor expressly agreed to "pay all taxes and assessments * * * levied * * * on account of this mortgage or the indebtedness secured hereby." To construe this agreement as if it contained the provision, "not exceeding two per cent.," is, in our judgment, to make a contract for the parties which they themselves did not make. The principle that "an agreement will not be adjudged to be illegal which is capable of a construction which will uphold and make it valid" has, we think, no application, because the agreement in question is not capable of the construction contended for.

We agree with the complainants that defendant is not justified in making any claim of relief on the ground of mutual mistake.

The decree of the lower court will be affirmed.

MOORE, GRANT, and MONTGOMERY, JJ., concurred.

HOOKER, C. J. (dissenting). The question raised by this record is whether an agreement by a mortgagor of land to pay 5 per cent. interest upon the amount secured by note and mortgage, and in addition "all taxes and assessments which shall be levied upon said lands, or on account of this mortgage or the indebtedness secured thereby, or upon the interest or estate in said lands created or represented by this mortgage or by said indebtedness, whether levied against the mortgagor, her legal representatives or assigns, or otherwise," is usurious. Inasmuch as the highest lawful rate of interest in this state was then 7 per cent., the contract was not usurious per se. If a promissory note or bond should stipulate that the payee's or obligee's taxes thereon should be paid by the maker or obligor in addition to the highest lawful rate of interest, there can be no question that the contract would be usurious. Counsel do not seem to question this, but insist that an agreement by a mortgagor to pay taxes does not fall within the rule, basing his contention upon some cases which he cites. The first of these is the case of Banks v. McClellan, 24 Md. 62, 87 Am. Dec. 594. All that was there said upon the subject was that: "We consider the charges for taxes on the mortgage, with simple interest on each item from the time it was paid, are allowable, Mr. McClellan having agreed to pay them, and the law authorizing such payments without incurring usury." Whether there was or was not a statute authorizing it does not appear. Perhaps an inference that there was such is proper; but, if not, there is nothing to show that such taxes were not taxes which were assessed against the mortgagor upon his property, and which he should of right pay. There is not an intimation that the mortgagee profited by such payment, and, if not, there was not usury.

The next case is Dubose v. Parker, 13 Ala. 780, where an agreement by the maker of a note to pay the highest rate of interest allowed by law, and taxes assessed to the payee, was held not usurious. It is a case in point, supporting complainants' claim, but based upon such fallacious reasons, and so at variance with principle, that we cannot follow it.

The other case is one of our own—Common Council v. Board of Assessors, 91 Mich. 78, 51 N. W. 787, 16 L. R. A. 59—where it was held that an agreement to pay all taxes assessed against all interests in the real property owned by the mortgagor, including the interest granted to the mortgagee, was not usurious. Under our law a mortgagee takes only a lien by way of security, leaving the legal title in the mortgagor. It was said that "such an agreement does not amount to a reservation of interest, but is in the nature of an agreement to preserve the estate, which constitutes the security, and is no more unlawful than an agreement to keep the property insured with a similar purpose." It is manifest that, if the debtor should pay his debt according to agreement, the creditor would get no benefit for the tax paid by him upon the land; nor would he if he did not, because on foreclosure he could recover only his debt and lawful interest through sale. His interest in the land would then be gone, as would the money paid for taxes upon it. The case of Kidder v. Vandersloot, 114 Ill. 133, 28 N. E. 460, is in point on that proposition. On the other hand, an agreement to pay 6 per cent. on a bond, and to save the obligee harmless from state taxes, was held to be usurious. Meem v. Dulaney, 88 Va. 674, 14 S. E. 363. There are many instances where a contract is not per se usurious. That could be said in this case, for the contract does not indicate that the taxes will swell the interest to more than a 7 per cent. rate. Many cases hold that an agreement to pay premiums upon life insurance as a part consideration for a loan already drawing the highest rate of interest is usurious, but the better opinion is that it is not necessarily so per se, but may

Digitized by Google

be shown to be. See Webb on Usury, § 326, and notes. In Boone on Morts. § 81, it is said that an agreement to pay taxes on a mortgage is not necessarily usurious; citing Banks v. McClellan, 24 Md. 62, 87 Am. Dec. 594, which indicates the author's understanding of that case. It goes without saying that it may not be usurious per se, for the aggregate of the interest reserved and the taxes promised to be paid or afterwards levied may not exceed lawful interest.

In the present case the contract plainly requires the maker of the note and mortgage to pay 5 per cent. and taxes which may be assessed thereon as a credit against the payee. If it could be said that it was a certainty that the taxes, etc., will not exceed 2 per cent., it could not be said to be a usurious contract. If it could be said from the contract that they would, it would be as clearly usurious; but as it could not be known what the taxes would be when the contract was made it cannot be said to be usurious per se. The sequel has proved that the taxes were 2½ per cent., and it is now insisted that the complainants must suffer a forfeiture, because they have not discharged the mortgage; and upon the same principle it might also be claimed that all unpaid interest should be forfeited. Without expressing an opinion as to whether or not such would be the necessary result in any case, it need not be in this, for we think this contract is susceptible of a construction which will make it valid. It is a rule of construction that contracts shall be so interpreted as to make them valid, rather than illegal, where the language will permit. Thus, in Merrill v. Melchoir, 30 Miss. 516, it is said, "Every presumption of law is in favor of the legality of a contract," and in Crittenden v. French, 21 Ill. 598, that "the law will not so construe a contract as to make it illegal when it will bear a different construction making it legal." In Ormes v. Dauchy, 82 N. Y. 443, 37 Am. Rep. 583, it was said, "The law will not presume a contract illegal, or against public policy, and so void, when it is capable of a construction which will make it valid." In Archibald v. Thomas, 3 Cow. 284, this rule was applied in a usury case, where it was said, "When a contract admits of two significations, that should be adopted which renders it operative, rather than that which renders it void;" and again, "If a contract is susceptible of two constructions, one of which will bring it within and the other without the statute of usury, the latter construction should be adopted." See, also, Stand. Oil Co. v. Scofield, 16 Abb. N. Cas. 379. In Lorillard v. Clyde, 86 N. Y. 384, it was said, "An agreement will not be adjudged to be illegal when it is capable of a construction which will uphold and make it valid." The federal courts hold the same doctrine. In Hobbs v. McLean, 117 U. S. 567, 6 Sup. Ct. 870, 29 L. Ed. 940, it is said, "When a contract is fairly open to two constructions, the one lawful and the other unlawful, the former must be adopted;" citing Whart. on Ev. (2d Ed.) § 1250; Best, Ev. (6th Eng. Ed., 1st Am. Ed.) §§ 346, 347; Shore v. Wilson, 9 Cl. & F. 355; Moss v. Bainbridge, 18 Beav. 478; Mandal v. Mandal's Heirs, 28 La. Ann. 556. This case was approved and followed in U. S. v. Cent. Pac. R. Co., 118 U. S. 236, 6 Sup. Ct. 1038, 30 L. Ed. 173.

We have already said that this contract is not usurious on its face, and we should not assume that the parties intended it to be an illegal thing when we can legitimately infer the contrary; and, while the strict letter of the contract would cover taxes in excess of 2 per cent., it is not unreasonable to suppose that the parties designed to include taxes only to an amount which, with the interest, would not be usurious.

It is suggested that an unlawful intent—i. e., an intent to take more than the legal rate of interest—is necessary to make the contract usurious. It may be conceded that there are cases where such a rule may apply, but if we say that in this case, and affirm the judgment, we not only relieve the mortgagee from a forfeiture of the lawful interest, but give him a judgment for the excess over 7 per cent., which the record shows that he recovered in the circuit court, and is claiming here. There is a class of cases where this question of intent is important; e. g., where one agrees to pay 5 per cent. and give the mortgagee a horse. There, if a jury can say that the value of the horse and the rate reserved so far exceeds the legal rate as to show an intent to pay and take more than the legal interest, it is a usurious transaction, while, if they approximate the legal rate, the jury may be able to find that the parties treated the horse as of a value low enough to show an intention not to exceed the legal rate, and that there was no intent to evade the statute, in which case there would not only be no penalty imposed, but the contract might be enforced. This can hardly be true of a case where the entire payment consists of money. If the contract shows a reservation of, or the party receives, money to an amount exceeding the legal rate, such excess is usury, regardless of the intent, if it must be treated as interest; i. e., compensation for the use of money. The Maryland cases cited are cases where a small excess had been actually paid.

It follows that as the decree includes all of the taxes, it is erroneous. As the briefs do not discuss the amount of usury upon this theory, the amount due can be determined upon the settlement of the decree, if counsel cannot agree upon it, at which time the question of costs can be settled.

Digitized by Google

JOHNSON et al. v. KINDRED STATE BANK.

(Supreme Court of North Dakota. Sept. 28, 1903.)

PLEADING — EXHIBITS — ACTION ON LEASE — BREACH OF COVENANT—SUFFICIENCY OF ALLEGATION — PAROL EVIDENCE — ADMISSIBILITY TO VARY WRITTEN CONTRACT—COLLATERAL PROMISE.

1. Where an exhibit attached to a complaint, and made a part of the pleading, negatives or contradicts allegations in the complaint founded upon it, the terms of the exhibit will control such general averment.

2. Plaintiff attached to his complaint a copy of the written lease upon which his action was based, and made it a part of the complaint by reference. This lease contained a covenant to "write $400 insurance upon building, and deduct from rent." An averment that defendant allowed the insurance to lapse and cease is not sufficient to show a breach of the covenant to write the insurance.

3. In stating a cause of action for the breach of a contract, which is ambiguous when applied to the subject of litigation, the pleader should point out in his complaint in what particular he claims the contract to be uncertain, and put some definite construction on it by averment.

4. Where a written contract purports upon its face to contain the whole contract of the parties, parol evidence cannot be received to add to its terms. If it appears from the writing itself that the whole agreement was not reduced to writing, and that the writing is incomplete to express the entire agreement, then, on proper allegations, the parol part of the contract may be proven.

5. To justify the admission of a parol promise by one of the parties to a written contract on the ground that it is collateral, the promise must relate to a subject distinct from that to which the writing relates.

(Syllabus by the Court.)

Appeal from District Court, Cass County; Pollock, Judge.

Action by C. M. Johnson and George Halland against the Kindred State Bank. From a judgment of dismissal, entered for defendant after an order sustaining a demurrer to the complaint, plaintiff appeals. Affirmed.

A. T. Cole, for appellants. R. M. Pollock, for respondent.

COCHRANE, J. The complaint alleges the incorporation of defendant; that plaintiff Johnson is the owner and Halland the mortgagee of the leased premises; that on June 21, 1900, plaintiffs and defendant entered into a written lease of the described property, a copy of which is attached to the complaint as "Exhibit A," and made a part of the complaint; that defendant was required by the terms of this written lease to write $400 insurance on the building on the leased premises; that it was agreed and understood between the parties that said insurance should be maintained and kept in force by defendant in some company for which it was agent as long and for the full time during which the lessee remained in possession of the premises under the terms of the lease; that on May 28, 1901, while defendant was occupying the premises under the terms of the lease, the building was totally destroyed by fire; that prior to its burning, defendant negligently permitted the insurance thereon to lapse and cease, "against the covenant and agreement of said defendant with the plaintiffs," and plaintiffs were damaged thereby in the sum of $400; that defendant elected to and continued to remain in possession and use of the leased premises after the expiration of the first year, under the terms of the lease, and was in possession at the time of the fire; that plaintiffs demanded before suit that defendant pay them $400 because of the destruction of the building and the loss incurred by and on account of the negligence and failure of said defendant to keep said building insured, as aforesaid, and by reason of the fact that said defendant had broken and violated its express covenant as to insurance. Exhibit A, referred to in the second paragraph of the complaint, and attached to it, in its formal part recites its making on the 21st day of June, 1900, the description of the property, and its pertinent parts read as follows: "To have and to hold the above-rented premises unto the said lessee, its successors and assigns, for and during the full term of one year from and after the 15th day of May, 1900, and as many weeks, months, or years after May 15th, 1901, as said Kindred State Bank may desire from time to time; and the said lessee agrees to and with the said lessor to pay as rent for the above-mentioned premises the sum of $96, payable May 15, 1901, and as rent for the time building is used after the expiration of one year it is agreed that the lessee shall pay at the rate of $8 per month, said rent to be paid to George Halland for and during the full term of this lease. It is hereby further agreed that said Kindred State Bank, as agents for C. M. Johnson and George Halland, shall have certain repairs and painting done on building, as agreed with C. M. Johnson this day, and deduct the actual cost of the same from the rent when paid; also to write $400 insurance on building, and deduct from rent." To this complaint defendant demurred, and, as grounds therefor, specified that the complaint did not state facts sufficient to constitute a cause of action. The demurrer was sustained by the trial court, and an order made directing the entry of judgment for the dismissal of plaintiff's action, with costs. This appeal is from the judgment.

The action is founded upon the written lease, a copy of which is made a part of the complaint by reference, and its plain purpose is to recover damages for a breach of the stipulation therein "to write $400 insurance on building, and deduct from rent." The terms of this writing will control in determining the sufficiency of the complaint as against demurrer in every particular where the terms of the lease do not sustain the allegations as to its contents; and where the

¶ 1. See Pleading, vol. 39, Cent. Dig. § 943.

Digitized by Google

averments are contradictory of or inconsistent with it, they will be disregarded. Willard v. Davis (C. C.) 122 Fed. 363; Freiberg v. Magale (Tex. Sup.) 7 S. W. 684. To state a cause of action, therefore, this complaint should allege a breach of the contract to write $400 insurance upon the building, and consequent damages. This is not done. The facts set forth as a breach are that, prior to the burning of the building, defendant permitted the insurance thereon to lapse and wholly cease, against the covenant and agreement of defendant. There is no covenant in the lease that the insurance was to be maintained by defendant for any time, or that it was to be rewritten. It was simply to write it. Consequently, no breach of the contract is pleaded. But appellant urges that there is a latent ambiguity in the insurance clause of this lease, in that the contract is silent as to the time for which the insurance written should run; and he has attempted to supply the time by alleging an agreement between the parties that the insurance should be written and kept in force by defendant for the full time it remained in possession of the premises under the lease, and that the covenant to write $400 insurance was a continuing covenant. We think that, when suing upon a contract which is ambiguous or uncertain in its provisions, when applied to the subject-matter of litigation, the pleading should so state, and by averment point out wherein plaintiff claims the contract to be uncertain, and put some definite construction on it by way of averment. Durkee v. Cota, 74 Cal. 313, 16 Pac. 5. Under the pretense of construing a written contract, new terms cannot be added to it. The writing is the only outward and visible expression of the meaning of the parties to it, and no other words can be added to, or substituted for, those used. The duty of the court is to ascertain, not what the parties may have secretly intended, as contradistinguished from what their words expressed, but what is the meaning of the words they used. Board v. Brown (Minn.) 68 N. W. 839; Hei v. Heller, 53 Wis. 415, 10 N. W. 620; Hunt v. White, 24 Tex. 643. The question here is entirely one of pleading. The complaint points out no ambiguity in the written contract, and places no construction upon its terms which would help out plaintiff's cause of action. By no possible interpretation of the language used in this contract can the words "write $400 insurance on building" be construed to mean rewrite and maintain $400 insurance on the building. Unless the language used in the lease is susceptible of this enlarged interpretation, no breach of contract is pleaded.

Appellant contends that the continuance of defendant in the occupancy of the leased premises after one year carried over the covenant to write insurance on the building, and imposed the duty of rewriting; and he cites section 4084, Rev. Codes 1899, to sustain his contention. Defendant's occupancy of the leased premises, under the positive averments of the complaint, was by virtue of provisions in the written lease, and the section of the statute quoted can have no application. Fields v. Mott, 9 N. D. 621, 84 N. W. 555. The lease expressed the terms upon which defendant could remain in possession after May 15, 1901, and, if it was the intention of the parties that the insurance should be rewritten after the first year in case defendant continued its occupancy of the leased premises, this intention should have been expressed therein. The very fact that the terms of defendant's occupancy after the expiration of the first year are expressed without mention of insurance would, so far as the written contract advises us, indicate that the insurance was to be written but once.

Plaintiff further contends that his action was brought and is at issue upon a contemporaneous collateral matter attaching itself to the lease, the lease being made a part of the complaint, to show that there was a contract for insurance, and that he pleaded and intends to show that collateral to this promise there was an oral agreement to be executed if respondent continued the lease after the first year. The answer to this contention is that no such contract is pleaded, and could not, under established rules of evidence, be shown, even if it were fully set forth in the complaint, and the demurrer must, nevertheless, be sustained. This contention is, however, inconsistent with the averments of the complaint. No parol agreement is set out, no consideration for such agreement is alleged, and the breach set forth is alleged to be of the covenant in the written lease. In each paragraph of the complaint reference is made to the written contract and the stipulation as to insurance as a covenant. It is clear that the word "covenant," as here repeatedly used, was intended and understood by the pleader in the sense of a written promise, and does not refer to any parol agreement. De Bolle v. Ins. Co., 4 Whart. 68, 33 Am. Dec. 38. If a parol stipulation was made concerning insurance after the first year, it was made as a part of the transaction then in hand, which is conclusively presumed to have been closed at the signing and delivery of the written contract, in that the written lease upon its face appears to be complete, and to express the full contract of the parties. The stipulation as to insurance is not concerning a matter separate and independent of the written contract, and must therefore be found, if at all, in one of the items and terms of the contract. Dutton v. Gerrish, 9 Cush. 89, 55 Am. Dec. 45; Thompson v. Libby, 34 Minn. 374, 26 N. W. 1. To permit this stipulation to be proven by parol would be to permit an additional term to be grafted upon the written contract, which would as effectually change the contract expressed in the writing as if the stipulation were in direct contradiction

of its terms. Cliver v. Heil (Wis.) 70 N. W. 346. It is stated as the settled general rule that all parol negotiations between the parties to a written contract anterior to or contemporaneous with the execution of the instrument are to be regarded as either merged in it or concluded by it. Thurston v. Ludwig, 6 Ohio St. 1, 67 Am. Dec. 328; Howard v. Thomas, 12 Ohio St. 204; Naumberg v. Young, 44 N. J. Law, 331, 43 Am. Rep. 380. To come within the exception to this general rule, which permits proof of an oral agreement collateral to the agreement expressed in the writing, and supplementary thereto, made at the same time as the written contract, it must appear that the alleged collateral promise relates to a subject distinct from that to which the writing relates. So understood, the parol promise of defendant to rewrite insurance if it continued to occupy the premises was not a collateral promise, but a part of the one contract. It was one of the terms of the lease, and not a separate and independent contract. Howard v. Thomas, 12 Ohio St. 201, 205; Thompson v. Libby, 34 Minn. 374, 26 N. W. 1; Palmer v. Albee, 50 Iowa, 429; Naumberg v. Young, 44 N. J. Law, 331, 43 Am. Rep. 380; Godkin v. Monahan, 83 Fed. 116-119, 27 C. C. A. 410; Cliver v. Heil (Wis.) 70 N. W. 346; Case v. Bridge Co. (N. Y.) 31 N. E. 254.

The judgment appealed from is affirmed. All concur.

CARNAHAN v. BREWSTER et al.

(Supreme Court of Nebraska. Jan. 8, 1902.)

ESTOPPEL—PLEADING—APPEAL—ISSUES—DEFAULT—DEFICIENCY JUDGMENT.

1. When an estoppel is relied on it must be pleaded.
2. It is a well-defined rule of this court that under all ordinary circumstances parties will be restricted in the appellate court to the same issues on which they relied in the court of original jurisdiction.
3. A default by a party properly served is a confession only of such facts as are properly pleaded in the petition.
4. Under section 847 of the Code of Civil Procedure, as it existed before its repeal, a deficiency judgment could not be rendered until the mortgaged property had been exhausted by the sale and confirmation thereof.

Commissioners' Opinion. Department No. 2. Appeal from District Court, Howard County; Thompson, Judge.

"Not to be officially reported."

Action by William H. Carnahan against Charles M. Brewster and John L. Means. Judgment for defendants, and plaintiff appeals. Affirmed.

Tibbets Bros. & Morey, for appellant. W. H. Thompson, for appellees.

OLDHAM, C. This suit had its origin in an action instituted by the plaintiff against a number of defendants in the district court of Howard county, Neb., for the foreclosure of a real estate mortgage. The action was begun in January, 1890.

The only question involved in the original suit which is now before us for consideration arises on the allegation contained in the ninth paragraph of plaintiff's original petition. This paragraph is as follows: "Defendant John L. Means claims the title to the said premises by virtue of a foreclosure of the same at a judicial sale, and said John L. Means assumed and agreed with the plaintiff to pay plaintiff's said mortgage by due and solemn promise in writing. —— Means, wife of John L. Means, has no interest except such as arises from such marriage relation." On the 28th day of September, 1891, defendant John L. Means being in default for an answer, the court entered a decree in favor of the plaintiff, for the amount due on the mortgage, against John L. Means et al., and ordered the mortgaged property sold. On the same day an entry was made permitting the defendants Means et al. to file answers on their liability for deficiency. On the 29th day of September, 1891, defendant Means filed his answer to the allegation contained in the ninth paragraph of plaintiff's petition, and denied any consideration for the promise in writing alleged on in plaintiff's petition. After the filing of this answer, the cause of action between plaintiff and defendant Means appears to have been continued, either by agreement or on application of one or the other of the contending parties, until the 14th day of November, 1898, at which time the plaintiff filed a reply in the nature of a general denial to the answer of defendant Means. After the filing of this reply the cause was again continued, on the application of the plaintiff, for the purpose of procuring further testimony, and on the 9th day of March, 1899, a trial was had to the court, and judgment was entered for the defendant, and plaintiff appeals.

The first contention that plaintiff urges for a reversal of the judgment of the trial court is that the decree of foreclosure entered on the 28th day of September, 1891, estops the defendant from setting up any defense existing at the time the decree was rendered, and that the order of the court permitting him to answer would only avail him for the purpose of interposing subsequent defenses, and not for the purpose of tendering any issue that could have been determined at the time of the decree. Even if we were inclined to follow this technical construction of the effect of the decree and leave to answer granted by the court on the same day, we could not then see our way clear to give plaintiff the benefit of such construction, in view of the fact that seven years after the decree had been rendered he filed a reply to defendant's answer, and neglected to interpose his plea of estoppel. It is now so well settled as to be elementary that when a party relies on an estoppel, he must plead it,

¶ 3. See Judgment, vol. 30, Cent. Dig. § 204.

Digitized by Google

and it is useless to cite authorities on this question.

There is another cogent reason why plaintiff should not now be heard on his plea of estoppel, and that is because of his failure to interpose this plea in the court below. It is a well-defined rule of this court that under all ordinary circumstances parties will be restricted in the appellate court to the same issues on which they relied in the court of original jurisdiction. Smith v. Spaulding, 40 Neb. 339, 58 N. W. 952; Omaha Brewing Ass'n v. Wuethrich et al., 47 Neb. 920, 66 N. W. 990; Moline, Millburn, Stoddard Co. v. Wood Mowing & Reaping Mach. Co., 49 Neb. 879, 69 N. W. 405.

There is another good reason why the decree of September 28, 1891, should not have estopped the defendant from denying personal liability, even if such estoppel had been pleaded, and that is that the allegations of the ninth paragraph of plaintiff's petition failed to allege any consideration for the alleged promise of defendant Means to pay plaintiff's debt, and therefore did not state a good cause of action for a deficiency judgment against him. Green v. Hall, 45 Neb. 89, 63 N. W. 119. While defendant Means had been served with proper process and was in default at the time the decree of September 28, 1891, was entered against him, yet a default by a party to a suit who has been properly served is a confession of only such facts as are properly pleaded. Lincoln National Bank v. Virgin, 36 Neb. 735, 55 N. W. 218, 38 Am. St. Rep. 747.

The evidence offered in the court below appears to fully sustain the conclusions reached by the learned trial judge. It appears from the testimony that defendant Means claimed some interest in the mortgaged premises by reason of a mortgage subsequent to that of plaintiff, and that Means was foreclosing his mortgage before this suit was instituted, and that he sent the following letter to McKinley & Lanning, agents for the plaintiff, on the 6th day of September, 1889: "Grand Island, Nebr., Septbr. 6th, 1889. Mess. McKinley & Lanning, Hastings, Nebr.—Gents: Yours of the 4th came during my absence from home. In reply would say regarding the Brewster loan in Howard County will say that I am negotiating a sale of this property and hope to close the deal very soon. This is to be a cash sale, and if I succeed, I will pay up the mortgage in full. Should I not succeed in making this sale will pay you the amount of interest due. Very respectfully, John L. Means." It is on the promise contained in this letter to pay the interest that plaintiff relies. Defendant testifies that he received no consideration whatever for this promise, and this proposition is not specifically denied by the testimony of plaintiff's witnesses, nor is there any allegation or consideration in plaintiff's petition, as we have already pointed out. There is no evidence that plaintiff ever agreed to extend the time of payment of this mortgage, or to forbear for any specified time the beginning of an action for the foreclosure of his lien, in consideration of this promise by the defendant to pay the interest. We are therefore of the opinion that the promise, although in writing, was a mere nudum pactum, and will not support an action against the defendant. In State v. Holcomb, 46 Neb. 630, 65 N. W. 874, it is said by this court: "Reciprocal promises, as a basis of a valid agreement, must be equally obligatory upon the parties, so that each may have an action thereon. Otherwise such agreement is nudum pactum."

There is still another reason why the judgment of the trial court should be affirmed, and that is that there is nothing in the record that shows the coming in of the report and the confirmation of the sale before the action for the alleged deficiency was sought to be enforced against the defendant. Under section 847 of the Code of Civil Procedure which was in force in 1891, a deficiency judgment could only be rendered after the mortgaged property had been exhausted and no personal judgment could be entered until after the coming in of the report of the sale and the confirmation thereof. Clapp v. Maxwell, 13 Neb. 542, 14 N. W. 653.

It is therefore recommended that the judgment of the district court be affirmed.

SEDGWICK, C., concurs in the conclusion reached.

POUND, C. I concur in the recommendation of my Brother OLDHAM, for the reason that the record fails to show confirmation of the sale at which the deficiency accrued. As to the applicability of Lincoln National Bank v. Virgin, 36 Neb. 735, 55 N. W. 218, 38 Am. St. Rep. 747, to this cause, I prefer to express no opinion.

Affirmed.

CITIZENS' BANK OF HUMPHREY v. STOCKSLAGER.

(Supreme Court of Nebraska. Nov. 7, 1901.)

APPEAL—PRESUMPTIONS—CONFLICTING FINDINGS—REPORT OF REFEREE —JUDGMENT.

1. All reasonable presumptions will be indulged in for the purpose of upholding the regularity of the proceedings of the trial court.
2. If there be a conflict between the general and special findings made by the trial court, the special finding will control.
3. A report of a referee has no juridical force until confirmed by the court.
4. Findings of trial court examined, and *held* to be not in conflict with the judgment rendered.

Commissioners' Opinion. Department No. 2. Appeal from District Court, Platte County; Robinson, Judge.

"Not to be officially reported."

Action by the Citizens' Bank of Humphrey against Eli A. Stockslager. Judgment for plaintiff, and defendant appeals. Affirmed.

Digitized by Google

A. M. Post, Allen & Reed, and Whitmoyer & Gondring, for appellant. McAllister & Cornelius, J. G. Reeder, and I. L. Albert, for appellee.

OLDHAM, C. The appellant in this cause of action had been for some years the president and cashier of the appellee, the Citizens' Bank of Humphrey. At the close of his official connection with the bank he made a pretended settlement of all his accounts with it. Some time afterwards the appellee bank filed this equitable proceeding, charging the appellant (defendant) with having fraudulently surcharged and falsified his accounts, and having fraudulently concealed such facts from the knowledge of the appellee (plaintiff) bank at the time of the settlement. The petition contained a large number of counts charging separate fraudulent transactions of the appellant (defendant) in his accounting and settlement with the appellee (plaintiff). But the proceedings and judgment on the sixth and eleventh paragraphs of the amended petition are the only ones that are before the court for review, as the other causes of action were all found in favor of the appellant (defendant) by the court below.

After the joining of issues, the trial court sent the cause to a referee, who was ordered "to try the issues of law and fact arising in the cause, and to report his findings to the court by the 15th day of February, 1896." The referee subsequently filed a report containing 20 general and 6 special findings, all favorable to the appellant (defendant). On objections filed to the report of the referee by the appellee (plaintiff) the court made the following order: "This cause came on for hearing, * * * on consideration whereof it is ordered by the court that the fourth special finding and the eighth and sixteenth general finding in said report be, and the same hereby are, set aside and vacated, and that said objections and exceptions as to the remainder of said findings are overruled by the court. * * * It is further ordered by the court that this cause stand continued until January 24, 1898, for further hearing." At the time set for hearing, the plaintiff (appellee) was permitted to amend the sixth paragraph of its petition to correspond with the proof, and the court entered the following order and judgment: "Whereupon said cause came on for final hearing on the pleadings and the evidence, and was submitted to the court, on consideration whereof the court finds that said defendant [appellant] should be charged with the sum of $559.44, with 7 per cent. interest thereon from May 18, 1894, to wit, $703.67, in the item mentioned in said paragraph number 6, and on the item mentioned in paragraph 11 of the amended petition said defendant [appellant] should be charged with the sum of $75, with interest from January 1, 1895, at 7 per cent., to wit, $90.75, and upon each of said items the court finds for the amounts hereinbefore mentioned in favor of the plaintiff [appellee]; to all of which the defendant by his counsel duly excepts. It is therefore considered by the court that the plaintiff have and recover from the defendant the sum of $794.42 and one-half of the costs herein, taxed at $——. It is further ordered by the court that the findings of the referee, except as heretofore set aside, be confirmed; that the defendant have judgment on the causes of action stated except those mentioned in the sixth and eleventh paragraphs of the amended petition; and that, except as to the paragraphs so mentioned, the petition be dismissed."

The eighth general finding of the referee, which was set aside by the trial court, was as follows: "(8) The facts stated in the sixth paragraph of the plaintiff's amended petition are not sustained by the evidence, and are not true." The sixteenth general finding of the referee, which was set aside by the trial court, was a similar finding with reference to the allegations of the eleventh paragraph of the plaintiff's (appellee's) amended petition. The fourth special finding of the referee, which was set aside by the trial court, was with reference to the allegations contained in the sixth paragraph of appellee's petition, and consisted of answers to special interrogatories with reference to the transaction charged in such paragraph. The sixth paragraph of appellee's (plaintiff's) petition in substance charged the appellant with having falsified his accounts by having entered on the books of the bank a fraudulent credit to himself of $560. The eleventh paragraph in substance charged him with having collected rent for lands owned by the bank, and converting the same to his own use. From this judgment of the district court the defendant below brings his appeal.

The twentieth general finding of the referee was not specifically set aside by the trial court. This finding was as follows: "General Finding No. 20. That on the 27th day of June, 1894, the plaintiff and the defendant had a full and final settlement of all transactions and matters between them, which settlement embraced all matters and things referred to in this report and in the special findings herewith returned; and in said settlement and accounting an amount was found due the defendant from the plaintiff, which amount was fully paid. That at and during said settlement and accounting plaintiff had knowledge and notice of the matters and things charged in the amended petition, and the defendant did not fraudulently conceal the same from plaintiff." No complaint is made in the brief filed by able counsel for the appellant (defendant) as to the action of the trial court in setting aside the findings of the referee above set out, nor are there any contentions made that there was not sufficient evidence to

Digitized by Google

support the findings and judgment of the trial court; and the only alleged error in the proceedings below on which they rely for a reversal of this cause is founded on the theory that the judgment is not supported by the findings made by the court below, the contention being that, as the twentieth general finding of the referee was not specifically set aside, it remained as one of the findings of fact by the trial court, and that by that finding the court declared that plaintiff (appellee) had notice of the alleged surcharging and falsification of appellant's (defendant's) account at the time of the settlement, and that, if plaintiff (appellee) had such notice, and such facts were not concealed from it, at the time of the settlement, then equity would not relieve it from the effect of such settlement.

If it be true that the judgment and findings of the trial court, when fairly and reasonably construed, show that the court below intended to and did find that there was no concealment, deceit, or fraud practiced upon the plaintiff (appellee) by the defendant (appellant) at the time of their settlement, then we would agree with the conclusions of appellant's (defendant's) counsel that a court of equity would refuse to relieve the plaintiff (appellee) by permitting it to impeach such an account stated. Bearing in mind the elementary rules that all reasonable presumption should be indulged for the purpose of sustaining the regularity of the proceedings of the trial court, and that when there is a conflict between a general and a specific finding the special finding controls, there appears to be no serious difficulty in sustaining the judgment of the trial court. When the report of the referee was filed, it was before the court without any juridical force. It was simply the response of an officer of the court to the order to find the law and facts involved in this controversy. It was before the court to be dealt with in the sound discretion invested in the court in such matters; and as we must presume the court exercised its sound discretion in approving the report in part and in setting it aside in part, as for good cause it had an unquestioned right to do. It will be noticed that every specific finding of the referee with reference to the allegations contained in the sixth and eleventh paragraphs of plaintiff's amended petition was set aside by the court. It will also be noticed that the findings of the referee with reference to the allegations in each of these two paragraphs of plaintiff's petition was that the allegations were untrue, and had not been proven, and that there is nothing in his findings that attempts to impute knowledge of the existence of these causes of action to the plaintiff at the time of its settlement with the defendant. An inspection of the report of the referee shows that in some of the allegations of the plaintiff's petition the referee did find that the plaintiff had knowledge of the existence of the alleged claim at the time of its settlement with the defendant, and that for this reason the referee found for the defendant on those causes of action. This twentieth finding of the referee was but a statement of the logical conclusions which followed from each of the 19 specific findings preceding it, and the general conclusion which it contained that the plaintiff had knowledge of these things charged in the petition should be construed to refer to these items of account which the referee found against the plaintiff because of such knowledge, and not to those allegations which the referee found were untrue.

It will also be noticed that after the setting aside of the report of the referee with reference to these two causes of action the court continued the case, and permitted plaintiff to amend its sixth cause of action, and rendered judgment on these causes of action on the hearing had before the court, and not on the hearing before the referee.

It seems to us that a fair and reasonable construction of this judgment and these findings of the learned trial court is that the court intended to and did confirm the report of the referee with reference to each of the allegations contained in plaintiff's petition except those contained in the sixth and eleventh paragraphs thereof, that the court intended to and did set aside all findings of the referee with reference to the allegations contained in these paragraphs, and that at a subsequent hearing before the court on the causes of action set forth in these paragraphs it intended to and did find a judgment for the plaintiff as before set out.

It is therefore recommended that the judgment of the lower court be affirmed.

POUND and SEDGWICK, CC., concur.

Affirmed.

CLARK v. LANCASTER COUNTY et al.*

(Supreme Court of Nebraska. Sept. 17, 1903.)

APPEAL IN EQUITY—COUNTY BOARD—BRIDGE BUILDING—CONTRACT—REPAIRS —INJUNCTION.

1. On an appeal in equity the appellee is not concluded as to any matter directly involved in the questions raised by the appellant.

2. As to matters not necessarily involved in the appeal an appellee who enters no cross-appeal should be held concluded.

3. The limitation on the power of the county board to contract for bridge building to cost a sum not greater than the amount of money on hand in the county bridge fund derived from a levy of previous years and two-thirds of the levy of the current year, gives no authority to the board to take into account the levy of the current calendar year prior to the making of such levy. Until it is made, there is no "levy of the current year."

4. The adoption of plans and specifications is a necessary preliminary to advertising for and letting a contract by the year for the building of bridges, and such advertising and letting must be in accordance with the plans and specifications so adopted.

*Rehearing denied November 18, 1903.

Digitized by Google

5. There is no authority for the letting of annual contracts for repairing of bridges, or for the doing of such repairing under an annual contract, where the amount exceeds $100.

6. A court of equity will not enjoin the further execution of a contract and enjoin the prosecution of any claim for compensation for work and material already furnished in good faith under it, except on condition of the payment of a fair value of the work and material so furnished.

7. Where defendant was proceeding under color of a lawful contract, the institution of an action to enjoin further proceedings under it, and the ordering of a temporary injunction on condition of the furnishing of a bond, which is not given, do not necessarily deprive the subsequent proceedings of defendant under the contract of their good faith and color of lawfulness.

(Syllabus by the Court.)

Commissioners' Opinion. Department No. 1. Error to District Court, Lancaster County; Frost, Judge.

Action by William M. Clark against the county of Lancaster and Charles G. Sheeley. From the judgment, Sheeley appeals. Modified.

J. L. Caldwell, W. T. Stevens, S. B. Pound, F. A. Boehmer, and Strode & Strode, for appellant. Billingsley & Greene, R. H. Hagelin, and Burr & Spencer, for appellees.

HASTINGS, C. This is an injunction suit brought by the plaintiff, as a taxpayer of Lancaster county, to prevent the defendant Sheeley from building certain bridges and from presenting any claim for pay for them or for materials or labor in them, and to procure the canceling of his contract with the county commissioners for their erection, and to prevent his collecting a $3,000 warrant which had been allowed to him on account of them and was unpaid. It was also sought to enjoin the county commissioners from taking any such action and the treasurer from paying the $3,000 warrant and from transferring from the general to the bridge fund any money of the county. It was also sought to have the county commissioners directed to consider the ordering of bridges in open session, and to make a record of their acts concerning that subject. The county was made a party presumably because of its interest in the contract which it was sought to have canceled.

The original petition was filed April 4, and, after alleging the corporate and official character of the parties, stated: That the commissioners had entered into an unlawful contract with Sheeley. That the latter, as "first party, agrees to furnish all materials, and to construct and complete ready for travel such bridgework as said commissioners may order built over streams in said county during the ensuing twelve months. Said bridgework to be built according to the plans and specifications attached hereto and made a part of this contract, the same as if written at length herein, and to be the various lengths as ordered, to be built of such material as ordered, conforming to said above-mentioned plans and specifications. And the said first party agrees to have the structure ready for travel within ninety days from date of order by said county commissioners. The first party agrees to promptly inspect and pass upon the work, and in consideration of the materials and labor to be performed by the first party the second party agrees to pay the first party the amounts set forth in the attached bids. Said payment to be made on completion of said bridgework as ordered, in warrants drawn on the county treasurer of said Lancaster county. The second party will, however, allow first party such estimate for material delivered as in said second party's judgment be proper and customary. The party of the first part shall within sixty days from date file a bond in the sum of $2,000.00, guaranteeing the faithful execution of this contract, with sureties satisfactory to said commissioners." That Sheeley had not given the bond. That on February 24th he had presented claims to the amount of $8,000 for materials under this contract, which had been allowed, and two warrants, one for $5,000 and one for $3,000, issued to him, the larger of which had been paid. That these claims were fraudulently allowed, and that no bridges had been ordered, and the commissioners knew, when allowing them, that no material had yet been furnished. That there was not to exceed $1,200 in the bridge fund of the county at the time of their allowance. That about February 24th, to provide funds to pay these claims, the commissioners directed $4,000 to be transferred to the bridge from the general fund, and dated their order March 12, 1902, and the money was paid on the $5,000 warrant, but was not paid for bridge material. That two of the commissioners have issued orders for bridges when not in session, and without the knowledge or assent of the chairman of the board. That defendant was proceeding to erect bridges, as he claimed, under this contract, to the amount of $22,600, upon such orders, and at prices and an expense to the county greatly more than was necessary, or had been before paid. On April 16th all the defendants except Tilton, the chairman of the board, and Knight, county treasurer, answered by a general denial. On the same day the plaintiff, Clark, filed an amended petition, embracing all his former allegations. In addition he alleged the following advertisement for bridge bids: "Notice is hereby given that sealed bids will be received at the office of the County Clerk at Lincoln, Lancaster County, Nebraska, until 12 o'clock noon, Saturday, February 15, 1902, for the building of all bridges that shall be ordered for the ensuing year. All bids shall be accompanied by plans and specifications and a certified check in the sum of $500.00. The board of County Commissioners reserve the right to reject any and all bids. Address

all bids to D. A. Frye, County Clerk. Lincoln, Nebraska, January 22, 1902." Also that other parties made bids, but the Sheeley contract resulted; that his bid was fraudulent and misleading, and not by the lineal foot, as the law requires, but for a certain sum per lineal foot and an additional amount for substructure or superstructure, and that his bid was not the lowest and best, and that there was no authority to award him the contract; that no plans and specifications were previously adopted, and there was no power to let an annual contract, and that the alleged one was unlawful and void. On the 5th of April notice had been given each of the defendants of the filing of the original petition and of the substance of its allegations, namely, that the contract of February 21st was unlawful and void, and that the allowance of $8,000 to Sheeley was also unlawful; that there was no power to make the contract, and that it was the result of an unlawful combination of defendants; and that all proceedings under it would be asked to be enjoined. April 11th was set as the day for hearing. On that day the notice was filed, but the hearing seems to have been deferred until April 22d and 23d, after the filing of the amended petition. April 26th a temporary injunction was allowed against all defendants except the county and the treasurer. They were to be forbidden to construct or repair any more bridges under the contract, or to file claims for work done, and the commissioners were to be enjoined from allowing any claims and from ordering any more work done under the contract. This was conditioned upon the giving of a $5,000 bond, which was not done. On May 27th defendants Borgelt and Welton, county commissioners, again answered, admitting the official character of defendants, the advertising for bids, and making of contract with Sheeley, the allowance of $8,000 to him, and the issuance of warrants for it, and the transfer of $4,000 from the general to the bridge fund. They deny plaintiff's other allegations. They say the contract was let in good faith on the lowest and best bid; that Sheeley had done a large amount of work under it and by orders from the board; that they are willing that an accounting be had between the county and Sheeley, and ask that it be had, and that plaintiff be cited to appear for that purpose.

In the meantime, apparently, a cross-petition had been filed by the county attorney, which does not appear in the transcript. It seems to have asked for an accounting between Sheeley and the county. At all events, on the same 27th day of May defendants Borgelt and Welton answered such a cross-petition by setting up that they and defendant Tilton were the county board; that they represented the county, and that the county attorney had filed his cross-petition without authority from them or from any taxpayer. They denied any collusion and fraud; said that all the work done by the contractor had been ordered by the board, and was all needed, and was done for the lowest obtainable price. In this answer, too, they ask for an accounting on the basis of the contract and of the $8,000 paid. Plaintiff replied to their answer by a general denial. On June 26th the county attorney filed an amended cross-petition, alleging that the county maintained a courthouse and offices for the sessions of the county board; that the board advertised for bids on bridge building for the year 1902, and, although the county board had adopted plans and specifications for the bridges to be built during the year, the advertisement called for bids to be "accompanied with plans and specifications"; that defendant Sheeley thereupon submitted his bid, with plans and specifications; that the latter were in form of "blue prints," and too voluminous to copy, but are referred to as a part of the cross-petition; that such procedure was unlawful, and no annual contract was authorized except upon the basis of the previously adopted plans and specifications which each bidder could and must make the basis of his bid; that the county board pretended to adopt the defendant Sheeley's plans, and unlawfully and fraudulently pretended to accept his bid and enter into the contract with him, and without advertising for competition on any plans and specifications adopted by the board, and without reasonable care to secure competition and the letting of the contract to the lowest and best bidder; that the contract was signed by the commissioners each individually, and is not binding upon the county. The county attorney further says that the accepted bid was not the lowest and best one; that it was so declared arbitrarily, and without consideration of others, in disregard of the rights both of the other bidders and of the public, and without any opportunity to other bidders to compete upon the plans so attempted to be adopted, and such action was illegal and void; that the contract so made was in pursuance of a conspiracy to prevent competition, and contains unlawful provisions, fraudulently incorporated in it, to allow and pay estimates for materials delivered and a provision for the contractor's filing a bond within 60 days instead of before entering upon the work; that the contractor, without first filing a bond as required by law, immediately entered upon the work, and commenced to build and repair bridges, without any finding of the board that such work was necessary, and without any order locating or directing it, and without lawful authority from the county board; that the $5,000 and the $3,000 warrants were allowed, and the first paid, and the second outstanding, and both should be made a lien upon all materials and bridges furnished and made by the contractor; that no findings or order had ever been made by the board as to what bridges or repairs were necessary; that no record existed of any action of the

Digitized by Google

county board as to any of the 27 bridges claimed by the contractor to have been ordered under the contract; that any such orders, if given, were by individual members of the county board, and of no binding effect on the county; that they were not acts of the board as a corporate body, nor done at the courthouse, nor in any regular session of the board; that the defendant Sheeley had full notice of the invalidity of such pretended action of the members of the county board, and of the amount of money on hand in the bridge fund, and that the contract when made was in excess of the funds, and void; that the bids were purposely made deceptive, and were not for completed bridges at a given sum per lineal foot, but at such a sum for superstructure with an addition for substructure, and were read and accepted by the board for completed bridges, and are grossly in excess of the ordinary price of such structures; that any bid for substructures separately was unlawful, and because of this unlawful feature, fraudulently introduced into it, the contract should be annulled. The county attorney further says that since the commencement of the action two of the commissioners attempted to ratify, and have made of record, orders for the 27 bridges claimed by the contractor, and to add 3 more; but such attempt to legalize and carry out an unlawful private agreement, before made, is contrary to good morals and public policy, and is unlawful and void. He alleged that the record so attempted to be made includes orders for repairs on bridges and for materials for that purpose, and that no advertisement was made, and no bids taken, and no contract let, and no plans and specifications adopted for the repair of bridges for 1902; that the repairs attempted to be so provided for are greatly in excess of $100 in costs, and that Sheeley had no authority whatever to enter upon such work. He asked that Sheeley be required to set out in full all the items of his claims against the county for work under his contract, and that as to all parties claiming rights in the material or warrants an accounting be had, if the court should hold that Sheeley had a right to compensation for his labor and materials employed upon the bridges. He asked that the Columbia National Bank, which claimed an assignment of the $3,000 warrant, be made a party, and required to show cause why it should not surrender it for cancellation; and that, as a multiplicity of suits would evidently grow out of the transactions in regard to these bridges unless the court should adjust the entire matter between the parties, that it do so by its decree. He alleged that the county officers would, unless restrained, make unlawful transfers of funds, and pay much more than was lawfully due the contractor, and that the orders for the 30 bridges amount to more than $23,900, a sum greatly in excess of the funds available, which were only $1,200. He prayed that the $5,000 warrant be declared a lien upon all the material and bridges purchased and built under the pretended contract; that Sheeley and the Columbia National Bank be enjoined from attempting to collect the $3,000 warrant; that Sheeley be enjoined from removing any of the bridges or materials, and from asserting any claim to them till further order by the court; that the commissioners and the county treasurer be restrained from acting under the contract, and the latter be enjoined from paying the $3,000 warrant, and that it be canceled; that Sheeley be enjoined from claiming that his bid at prices set opposite his specifications included only substructures; that the board be restrained from ordering more bridges on the contract, and Sheeley from interfering in any way with the materials and structures furnished the county under it; that the court should instruct the commissioners as to their duties in adopting plans and specifications, advertising for bids, letting contracts, and taking bonds for their performance in the matter of county bridges.

On June 23d there had been filed an answer to this cross-petition by the contractor. He admitted the corporate and official character of the parties, and the adoption of plans and specifications for bridges for 1902 by the county board, and the advertisement calling for plans and specifications; but alleged that the advertisement was in all respects lawful; admitted that he made a bid, accompanied by plans and specifications of his own, but said it was accompanied also by those "which had been previously adopted by the county," and that the bid was in all respects regular and lawful; and denied any lack of authority in the board to accept a bid with plans and specifications; denied the contract was signed by the commissioners individually, and said it was executed by them on behalf of the county. He denied the entire cross-bill, and alleged that his bid was regular, was the lowest and best, and was regularly accepted on due consideration; said that the $5,000 warrant was paid to him, and the other negotiated to the bank as alleged, but that he had then furnished $9,700 worth of material for bridges, and the warrants were in part payment for it; that nearly all of this material, and much more, was placed in bridges for the county before the amended cross-petition was filed; that his bid for wooden bridges was at so much per lineal foot of completed bridges, and for steel ones at a certain price for superstructure and an additional price for substructure, both by lineal foot, and so understood by the county board, and that all the bids for steel bridges were of the same character. He says that in December, 1901, County Commissioner Tilton instructed him to order sufficient bridge material for the year 1902, and assured him that it would be purchased at its reasonable value by the county if he did not get the contract; that the $9,700 of material were procured and delivered, and the $8,000 allowed in pursu-

Digitized by Google

ance of such order; that no appeal was taken, and after 10 days the warrants were delivered to him; that, as he is informed, the object of such ordering of material was to make roads immediately passable and because of urgent necessity; that, after the awarding of the contract to him, written orders, signed sometimes by two and sometimes by all three commissioners, were from time to time given him for erecting and repairing 30 bridges, the orders being numbered from 1 to 30, inclusive. He says that as to each of these an emergency existed; that all of the work was done under the contract, and in accordance with the plans and specifications accompanying it, which had been accepted and were in use by the county; that a record was made of each of said orders and the work done in good faith, and only the $8,000, so far, had been paid for it; that Nos. 2, 3, 4, 25, 26, and 27 were completed by March 22d, Nos. 11, 12, 13, 14, 15, 16, 17, 18, 22, 29, and 30 were completed between March 12th and April ——, and Nos. 6, 7, 8, 9, 10, 19, 20, 21, and 24 were completed between May 1st and June 15th, and the others were in course of construction. He says that 17 of these bridges (designating by number) were accepted by order of record by the county board, and 9 more were accepted by the commissioners, but no order concerning their acceptance as yet entered of record. He also says that during the progress of this work he was ordered to move and paint certain spans of certain bridges, and did so, to the reasonable value, all told, of $863, and that under the terms of the contract there is due and owing $15,986.84, after crediting the $8,000. This amount is itemized by stating the compensation due under the contract for each of the 29 bridges and for this he asks judgment.

A second amended cross-petition was filed by the county attorney, changing its allegations in a few formal respects. An Exhibit B, a resolution of the board of county commissioners, which purported to have been adopted April 15th by a "majority vote," was attached. It recited that it had been the custom of the county board, in ordering bridgework under the contract, to go to the site with the contractor, and give orders on the spot, and have such orders spread upon the records during the year at some time after the work was done and before payment, and that some question had arisen as to the propriety of not entering the orders of record before the completion of the work. It was resolved that the orders for these 30 bridges, designating them by numbers and location, be spread upon the record.

Plaintiff replied, denying that the contract covered any repairs; denied that Sheeley's bid was by the lineal foot; denied that any accounting could be had, and also that anything was due, and also that the contract could be reformed or validated in any way; admitted the allegations in regard to the two warrants, but denied the county's right to any accounting therefor, and denied the need of any relief against a multiplicity of suits, or any other relief for the county in this action, and denied the right of the county to set up its cross-petition for an accounting, and denied the jurisdiction of the court to entertain it. Replies by general denial were filed on behalf of the county to the answers to its cross-petition.

On trial of the issues thus made the court found generally for plaintiff and against defendants, and that the contract was illegal and void, and upon the cross-petition for the county against the contractor, and that he could recover nothing upon his contract. The court found for the contractor as to the value of the work done before the action was begun, and for the county as to all work done after that. It found the value of bridges repaired and constructed before the action was $6,608.74, and that one more of the value of $2,065.66 was then in such a condition that it was necessary to complete it, and that on each of two repaired after the beginning of the action, the work was less than $100 in amount, so that the board was authorized to have it done without bid or contract, and that these two were worth $128. The total recovery allowed the contractor was, therefore, $8,802.40, less $8,000 previously paid, leaving $802.40. It found that one bridge was begun after the commencement of the action, and not completed, and that nothing could be recovered for it. It found that order No. 23 was given before the letting of the contract, that the work on it was $194, but that there could be no recovery for it in this action. It found that construction and repair work to the value of $8,529.06 was done after the action was begun, and that for such work there could be no recovery. It canceled the contract on the county's petition, and enjoined the defendants from carrying it out any farther, awarded judgment to the contractor for $802.40, and enjoined him from in any way interfering with the bridges or materials on the ground. All parties excepted to the findings and decree, and motions for new trial were filed by the contractor as against both the plaintiff and the county, and were both overruled. Motions for new trial filed separately by Commissioners Borgelt and Welton were also overruled, and from the decree the contractor appeals.

His counsel take the ground that the sole question presented is whether he shall be paid under his contract according to its terms, on the ground that it was valid, or shall receive at least the additional $8,529.06 for the reasonable value of the work, or shall merely have the $802.40 allowed him by the court. It is claimed that the findings of amounts made by the court are much below the true values as shown by the evidence. It is claimed that, as no appeal is taken by plaintiff or by the county, they are concluded

Digitized by Google

by the decree. Upon this point we are cited to Schlawig v. De Peyster, 83 Iowa, 323, 49 N. W. 843, 13 L. R. A. 785, 32 Am. St. Rep. 308; Hamilton v. Whitney, 19 Neb. 303, 27 N. W. 125; Dennis v. Caughlin (Nev.) 41 Pac. 768, 29 L. R. A. 731, 58 Am. St. Rep. 761, and Randolph v. Lampkin (Ky.) 14 S. W. 538, 10 L. R. A. 87. The first is a holding under the Iowa practice, which simply makes an appeal a substitute for a proceeding in error. The objection to the decree urged by the successful party had no connection with those of the appellant. This last is also true in the Nebraska case cited. It was an appeal from a finding that a certain judgment was a lien. The appellant disputed the proper indexing of the judgment. The appellee was not allowed to correct the amount, which he claimed was too small. The other cases are ones in which appellee's complaint had no direct bearing upon that on which the appeal was taken.

It is not thought that an equity appeal in this state, where the appellant asks a hearing de novo as to the validity of the contract in question and as to the amount due on quantum merult if the contract is found bad, permits him or the court to treat the other party as concluded with reference to these very questions. As the syllabus in Hamilton v. Whitney puts it, the rights of the plaintiff and of the county are "inextricably involved" with appellant's in the decision of these questions which appellant himself raises. Unless both parties are concluded by a decision on a given point, it seems clear that neither is. Of course, there are cases in which only one party is permitted to raise the question, and then, if he elects to treat the matter as settled, the other must. But if he chooses to open the question the other party is no longer bound. A petition in error starts a new action. Nothing is involved in it except the errors assigned. 2 Cyc. 510. An appeal, however, is a further proceeding in the same action, and brings up all the parties necessary to the determination of appellant's rights in the matter. McHugh v. Smiley, 17 Neb. 626, 20 N. W. 296, 24 N. W. 277; Polk v. Covell, 43 Neb. 884, 62 N. W. 240; Western Mfg. Works v. Leavenworth, 52 Neb. 423, 72 N. W. 592. The plaintiff and the county are here as appellees to discuss these very questions brought here for that purpose by the appellant, and, it would seem, are entitled to claim whatever the law gives them upon each of these points which the appellant contests. The question of the amount recoverable upon this contract or upon the accounting, if one is to be had between Sheeley and the county, must be deemed entirely open upon this appeal.

The first real question to be determined is the validity of the contract. It is assailed on the ground that the advertisement is illegal; that it called for bids to be accompanied with plans and specifications, and yet was "for the building of all bridges that shall be ordered for the ensuing year"; that there were no funds on hand to warrant any such expenditure as the contract involved; that the bid was not by the lineal foot; that Sheeley's bid was not the lowest and best one; that the agreement to pay estimates and for filing a bond within 60 days are both unlawful; and that there was no lawful consideration of competing bids. Section 83, c. 78, Comp. St. 1901, provides that all contracts for the erection and reparation of bridges, whose expense shall be more than $100, shall be let "to the lowest and best bidder," provided the county commissioners "may adopt plans and specifications for the building of such bridges and may let a contract or contracts for the building of all bridges that may be required to be constructed during the term of one year from the letting of the contract." There are further provisos that the contracts shall not be let "to cost more than the money on hand in the bridge fund," together with the road fund money of the district where the work is to be done. It is urged that the clear meaning of this statute is that, where it is meant to let annual contracts, plans and specifications must be adopted in advance, and the contract be for bridges in accordance with such plans by the lineal foot; that, if such must be the contract, the advertisement must call for the same thing, and that it did not in this instance. It is also claimed that there is no authority whatever for an annual contract for repair work; that, in its nature, there could not be, and that no mention of repair work occurs in the advertisement. It is also objected that the contract is utterly indefinite as to the amount of work, and that orders were given under it for some $23,000 worth of bridges, while there was only $1,200 on hand. It is admitted that there was only this element of cash, but it is claimed that $4,000 more was really in the bridge fund, because it had been transferred to the general fund by an improper and illegal order in December, and was returned in March, and that the "levy of the current year," referred to in the statute, was the levy of 1902, which was made in July of that year. Two-thirds of it would be $16,803.-07. If this was available before the levy was made, with the other funds at hand, there would be sufficient to warrant the contract ing for all the bridges ordered. If, however, the levy of 1902 was not available until it was made, then the contracts were in excess of the board's authority, and forbidden by the statute. The question as to whether the term "current year," in this statute, means "calendar year," which has long been by this court held to be the fiscal year of the county (State v. Cornell, 54 Neb. 650, 75 N. W. 25), or the year from one annual levy to another, is by no means free from difficulty. In Austin Mfg. Co. v. Brown County (Neb.) 90 N. W. 929, in an opinion with which the writer concurred at the time, it was held

that the provision against contracting any debt against the general fund of the county in excess of "85 per cent. of the amount levied by tax for the current year" did not interfere with contracting in May on the strength of a levy made on June 29th. It was there declared that the levy "for the current year" was the one made in that calendar year; that the levy as well as the collection of a tax might be anticipated. A more careful consideration of the question since has led to the conclusion that the opinion in Austin v. Brown County goes too far, and much farther than was necessary to a determination of that case. A perusal of the opinion will show that the defense made some years after the giving of the order for the grading machines was that it was given in May, when there were no funds on hand. The receipt of the machines, and the retaining of them in use after the annual levy, would ratify the former contract if it was susceptible of ratification, or would constitute the basis of a new implied one if the former was absolutely void. There is no statute prescribing how contracts for such supplies shall be entered into, and an implied contract was held valid. The language used in the statutes as to the general fund is somewhat stronger than in the one under consideration. The permission as to the general fund is to use "85 per cent. of the tax levied for the current year." It is impossible to see how a tax can be "levied" when it is only estimated, and the time for levying it has not arrived. It seems clear that in the case of the general fund it is only a tax levied that may be contracted against. In the case of the bridge fund the wording is slightly different. Not "85 per cent. of the tax levied," but "two-thirds of the levy of the current year," may be contracted against. This, however, would seem, in absence of any other controlling fact, to alter the construction; to require an existing, and not merely an estimated and expected, levy. Such a fact is sought in the phrase "money on hand derived from the levy of previous year." It is urged that the levy of 1901 was a levy of the previous year, and therefore the two-thirds of the levy of the current year must be that of 1902. It is clear, however, that this is merely assuming that the term "previous year" has reference to the calendar year last elapsed. There seems no more necessity for assuming that "previous year" means "previous calendar year," than that "current year" means "current calendar year." It must be conceded that ordinarily, when we use the terms "this year," "the current year," or "the previous year," we mean in each instance the calendar year in which the event under discussion took place and the one before it. Did the Legislature have this meaning in putting the words into this statute? The argument seems irresistible that it did not. They were fixing the exact limit beyond which the county board should not contract. To put such limit at a wholly uncertain and unknown amount, to be determined by future action of the board, would be to make none. It would leave those who should contract with the county entirely uncertain for nearly six months as to whether their agreement was valid or invalid. To hold that in each use of the word the year referred to, whether "current" or "previous," is the year from one levy to another, the year for which it is really made, seems more reasonable. Granting the contention of defendant that the transfer of $4,000 from the general to the bridge fund was merely replacing money that belonged in that fund, there was still only about $6,000 of available money in that fund. The orders given amount to more than $23,000, unless the levy of 1902, not yet made, could be taken into consideration. We conclude that such action was unauthorized, and the taxpayer on this ground entitled to enjoin its execution. The statute seems to require also that plans and specifications be adopted in advance of the letting of an annual contract, and that the contract, as well as the advertisement, should have been based upon such plans. It also seems plain that no authority exists for repairing by annual contract, and that, where a repair job amounts to more than $100, it must be done by advertising for bids. The contract, therefore, was invalid, and the action of the county board under it unlawful.

Was the payment ordered by the trial court of the reasonable value of the work done before the action was commenced the true measure of Sheeley's rights? The plaintiff took no appeal from the order admitting the county to interplead, and to ask for an accounting. Sheeley's appeal from the amount allowed him cannot be said to bring up the question of the county's right to request this accounting, in which request he joined. We therefore do not have before us the question of the right of the county authorities to inject these questions into the taxpayer's action for an injunction against the carrying out of this contract and for its annulment. We do not see any necessary connection between the two. The plaintiff, indeed, sought to enjoin any claim or recovery by Sheeley on account of these bridges, but the joining of the proceedings for a settlement of Sheeley's rights without a contract to the action of Clark, which was brought to stop proceedings under it, seems to have been productive of no little confusion at the hearing. The question of the right of such joinder, though raised at the trial, is not before us at the present time, and is not decided.

The question remaining is, what amount is Sheeley entitled to recover for these bridges built and repaired with no legal contract? It seems clear that the Nebraska statute indicates a prohibition upon any such method of bridge building. It would certainly make the statutory requirement that all repair work ex-

ceeding $100 in amount shall be done upon competitive bids, duly advertised for, of small account, if a county board could simply give orders for such work, as in this case, amounting to more than $15,000, with no advertising and no contract. Sheeley's contract, like the advertisement, is silent as to repairing. The advertisement was for bids upon "the building of all bridges that shall be ordered for the ensuing year," and the contract was "to furnish all materials, and to construct and complete ready for travel such bridgework as said commissioners may order built over streams," etc. The work was to be "built" according to plans and specifications accompanying, and of the various lengths and materials as ordered. There is not an intimation that of the $23,900 worth of work contemplated about $15,000 was repairing. Of course, equity enforces no forfeitures, but equity follows the law. If, as we think, there is in the law of the state of Nebraska a distinctly implied prohibition against the making of bridges without advertising and letting of contracts, and against repairing bridges where the expense is more than $100 without such letting of contracts, and there is in the statute an express prohibition of the doing of either without money on hand or a levy actually made to pay for it, then, in equity, no more than at law, can there be a recovery where there has been an intentional violation of the prohibition. In this case, however, there was an attempt to comply with the law. An advertisement was published, a bid made, and a contract entered into. There was a colorable claim, at least, of a right to contract with reference to the levy to be made in the following summer. The court did not find that these proceedings were taken in bad faith. It entered no express finding as to that; but in allowing Sheeley the $8,204 which he had earned before the action was begun it must have found that up to that time the proceedings, while irregular and unauthorized, were in good faith. We are not prepared to say that this finding is wrong, and that the circumstances are such as to entitle the county to hold Sheeley's materials, as well as labor, for nothing.

Was the refusal to allow him anything for the nine orders constructed or repaired after the commencement of this action, amounting, as the trial court found, to $8,529.06, right, and justified? It is, of course, contended by appellee Clark that the general finding in his favor is a finding of fraud and willful violation of the law, which precludes any recovery at all by Sheeley. If this were true, the refusal to allow for the bridges constructed and repaired after the bringing of this action must not only be sustained, but the allowance for what was previously done must be reversed. There are some facts in this record tending quite strongly to show that the advertising and letting of the contract was not in good faith, that Sheeley practically had an understanding with the commissioners from the preceding year that he was to have the contract; that, as his witness Drake expressed it, "Lancaster county was Sheeley's territory." The court, however, in allowing him for the first constructed bridges, negatived such a conclusion, and we do not care to disturb it. We are unable to see that the bringing of this action changed the conditions. So far as Sheeley's rights and the validity of his contract depended upon his own, and the commissioners following public statutes, the bringing of this action brought him no fresh notice of them. Their enactment and publication is conclusive of notice to every one. So far as any intent to evade them is concerned, he would know as well before this action was commenced as afterwards whether it existed. If, as we think, and the trial court seems to have thought, his right depends upon there being reasonable ground for the construction of the statutes, which his counsel are still contending for, the institution of this action and the failure of plaintiff to comply with the order requiring a bond for the temporary injunction would be no demonstration of its unreasonableness. In Grand Island Gas Co. v. West, 28 Neb. 852, 45 N. W. 242, where a taxpayer had sought to cancel a contract and enjoin its execution and payment of certain gas bills incurred under it, which the city council had allowed, the decree allowing the injunction was modified so as to permit payment for the gas which had been furnished before the action was commenced. The contract was void because made with a corporation in which members of the city council were stockholders. The case is not authority for the proposition that no recovery could be had for gas furnished after the action was begun. No such question is discussed. So far as appears, none was furnished after the beginning of the action. The holding is that plaintiff was not entitled to any injunction against the payment. Whether it could be recovered for on quantum meruit is expressly left undecided. But it is held that a cancellation of the contract and injunction against its carrying out will be allowed only on condition of payment for gas furnished. We are constrained to think, if there had been no temporary injunction, and gas had been furnished in good faith up to the hearing, it would have also been required to be paid for. In the present case the taxpayer chose to litigate in a court of equity his rights. He asked not only the cancellation of the contract, but an injunction against the allowance of any claim for bridges, or for work and material. As preliminary to any such relief, it would seem that the court should have required payment for all the labor and material which Sheeley had furnished in good faith before the order was entered, even after the commencement of the action. We think he should have had a decree

Digitized by Google

for the full amount of his labor and materials, or the contract declared void, and the parties left to the legal remedies.

It is complained that the amount found by the court is not large enough. There seems to be no equity requiring any greater amount. Mr. Sheeley simply testifies that at fair prices, with a reasonable profit, his work was worth the contract prices, amounting to $23,973.35. His witness Drake says the work was worth $24,894.64, allowing a 20 per cent. profit on expenditures and 15 per cent. to the contractor for office maintenance and expenses and insurance. Evidently, the allowance by the trial court is sufficient to cover Mr. Sheeley's outlay in money and property. For his personal services under a void contract he could make no claim. Argenti v. San Francisco, 16 Cal. 255. For neither profits nor office and soliciting expenses is the county under obligations to pay one who is violating the law. The evidence as to the steel bridges No. 1 and No. 19 is that the actual expense of their erection would be respectively $1,320.89 and $1,980.76. The first is charged at $2,449.95 and the other at $3,402.76. The finding of the trial court as to completed work which was done after the action, viz., $8,529.06, is thought to be ample to reimburse the actual expenditure on these bridges. Bridge No. 5 was not completed, and nothing was allowed for it. Mr. Sheeley says the lumber for it was at the side, and worth $195.37 at $25 per thousand feet; that he had put in 184 feet of piling, for which he charges 55 cents, making $101.20, and 112 feet of 30-inch tubing at $12.50, $1,400—making a total for this bridge of $1,696.59. As Mr. Sheeley is enjoined from interfering with any of this material or disturbing it in situ, he should be paid for it. The main item is the tubing. His witness Drake put the price of this at $14, but was allowing a 20 per cent. profit and 15 per cent. contractor's expenses. Mr. Sheeley's price is $12.50 per foot, but this price included his profit. Taking Drake's price and deducting the 20 per cent. profit, would make the tubing $1,254.40. The piling at 40 cents—the price at which Mr. Sheeley had driven a good deal of piling for Lancaster county—would be $73.60. The lumber at $195.37—Mr. Sheeley's price—would make this bridge worth a total of $1,423.37. This amount should be added together with the value of the finished work as found by the court, viz., $8,529.06, to the total sum of appellant's recovery.

It is recommended that the amount of appellant Sheeley's recovery from the county be changed from $802.40 to $10,754.83, and that interest be allowed on this amount from the date of the original decree, and that the decree of the trial court in all other things be affirmed.

AMES and OLDHAM, CC., concur.

PER CURIAM. For the reasons stated in the foregoing opinion, the appellant Sheeley's recovery from the county is changed from $802.40 to $10,754.83, and interest on this amount from the date of the original decree, and the decree of the trial court in all other things affirmed.

HUTCHINSON v. SMIDT et al.

(Supreme Court of Nebraska. Sept. 17, 1903.)

MORTGAGE FORECLOSURE—SALE—CONFIRMATION.

1. "On proceedings to affirm a sale of mortgaged premises, no objections will be heard founded on an erroneous or imperfect description of the premises in any of the proceedings, unless it be alleged and shown that the party objecting will be prejudiced thereby; nor in case of personal service or appearance of such party in the action, if such erroneous or imperfect description occurs before judgment." Cooper v. Foss, 19 N. W. 506, 15 Neb. 515.

2. Jurisdiction to confirm a sale carries with it jurisdiction to overrule objections to it.

Commissioners' Opinion. Department No. 1. Appeal from District Court, Douglas County; Dickinson, Judge.

"Not to be officially reported."

Suit by Mary A. Hutchinson against Margaret Smidt and others. Judgment for plaintiff, and defendants appeal. Affirmed.

George A. Magney, for appellants. Crane & Boucher and Daniel Horrigan, for appellee.

HASTINGS, C. This is an appeal from a confirmation of sale. It is complained that the court, in overruling the objections to the sale, and confirming it, erred (1) because the decree and order of sale merely described the property as lot 13 in block 15 in Walnut Hill Addition to Omaha; (2) because the district judge overruled objections, and entered confirmation of the sale at chambers.

So far as the first objection is concerned, the almost identical description in an appraisement in Fulton v. Ryan, 60 Neb. 9, 82 N. W. 105, is held sufficient on the ground that the courts will take judicial notice that Omaha is situated in Douglas county. In Cooper v. Foss, 15 Neb. 515, 19 N. W. 506, the first point of the syllabus is as follows: "On proceedings to affirm a sale of mortgaged premises, no objection will be heard founded on an erroneous or imperfect description of the premises in any of the proceedings, unless it be alleged and shown that the party objecting will be prejudiced thereby; nor in case of personal service or appearance of such party in the action, if such erroneous or imperfect description occurs in proceedings before judgment."

So far as the second point is concerned, it is conceded in the brief of appellant that the district judge has jurisdiction to confirm a sale at chambers, but it is urged that he has no jurisdiction to do anything more, and in this case he found it necessary to overrule objections. It would hardly seem

¶ 1. See Mortgages, vol. 35, Cent. Dig. § 1533.

Digitized by Google

to require any consideration or argument to show that the jurisdiction to confirm a sale necessarily carries with it jurisdiction to overrule objections. The fact that confirmation can only be had after 10 days' notice to the opposite party clearly shows that it was expected that that party should be heard as to the sale, and his objections, if he made any, passed upon.

It is recommended that the order of the district court be affirmed.

AMES and OLDHAM, CC., concur.

PER CURIAM. The conclusions reached by the Commissioners are approved, and, it appearing that the adoption of the recommendations made will result in a right decision of the cause, it is ordered that the order of the district court be affirmed.

FERRIS v. MARSHALL.

(Supreme Court of Nebraska. June 19, 1901.)

SALE—ACTION FOR PRICE—INSTRUCTIONS.

1. An instruction directing the jury to find for the defendant, in case they found that he rescinded the contract of sale of a wagon purchased by him as soon as he discovered that the wagon was not as warranted, is erroneous in the absence of any plea of a rescission of the contract, or of any evidence to support such a plea, if made.

2. The court should briefly state the issues made by the pleadings in its instructions to the jury.

Commissioners' Opinion. Department No. 3. Error to District Court, Phelps County; Beall, Judge.

"Not to be officially reported."

Action by Alden Ferris against T. H. Marshall. Judgment for defendant, and plaintiff brings error. Reversed.

Rhea Bros. & Manatt, for plaintiff in error. A. J. Shafer, for defendant in error.

DUFFIE, C. The plaintiff in error brought suit against the defendant in error upon a promissory note for $65, the petition being in the usual form. In his answer the defendant alleges that the note was given for a wagon purchased from the plaintiff; that he applied to the plaintiff to purchase what is known as a "Mandt" wagon, and that the plaintiff showed him what he represented to be a Mandt wagon, and to be well made, of good material, and in first-class condition; that he warranted the wagon to render satisfactory services, in all uses for which a wagon is ordinarily used, for the space of one year; that he relied upon this representation and warranty, and agreed to, and did, purchase the wagon for the stipulated price of $65. He further alleges that the wagon was not a Mandt wagon, that it was what is known as "Champion" wagon, and was not made of good material, nor was it well made, and was unfit and worthless for the purpose for which a wagon is ordinarily used. Shortly after his purchase thereof, and while using it to haul grain to market, and while exercising proper care in its use, the wagon broke because of its inferior quality and poor construction, and has at all times been useless and worthless to the defendant, and of no value whatever. The third paragraph of the answer is as follows: "Third. That although defendant frequently requested the plaintiff to take said wagon back and replace it with a good wagon, conformable to the representations and warranty as made by the plaintiff on the sale thereof as aforesaid, or make good the defendant's damages in the premises, yet the said plaintiff has at all times refused to take said wagon back in exchange for another wagon, or make good the defendant's damages in the sum of $65.00; that, by reason of the false representations and breach of warranty before mentioned, this defendant has been damaged in the sum of $100.00. Wherefore defendant demands judgment against the plaintiff for the sum of $100.00, to be offset against the claim of the plaintiff, that the plaintiff take nothing by his petition, and that the defendant have his costs in this action." A trial was had to a jury, which returned a verdict for the defendant, upon which the court entered judgment, and the record is brought to this court for review.

The third instruction of the court is as follows: "Third. The court instructs the jury that if you find from the evidence that the plaintiff in this case sold the defendant, Marshall, a wagon for which the note in question was given, and you further find the plaintiff represented to the defendant that the wagon so sold was of a certain brand called 'Mandt wagon,' and you further find the defendant, relying on the statement of plaintiff that the wagon was a 'Mandt wagon,' purchased the same and gave him his note herein sued on for the same, and you further find the wagon was not a 'Mandt wagon,' but one of inferior quality, then the court instructs you that the defendant, as soon as he discovered this fact, if you find it was a fact, had a right to rescind the contract and return the wagon. Therefore, if you find that the wagon was not as warranted or represented, and the defendant, as soon as he discovered this fact, rescinded the contract and returned the same, the plaintiff cannot recover in this case, and your verdict should be for the defendant, bearing in mind the burden is on the defendant to prove these facts." The plaintiff excepted to this instruction, and now assigns the giving thereof as error. The answer of the defendant does not claim a rescission on his part, and there is no evidence in the record which would in the least sustain a plea of rescission, if made. The defendant returned the wagon to the plaintiff to have it repaired, but not, as we understand from the evidence, for the purpose of rescinding the contract. The evidence is conclusive that the wagon has been in the

Digitized by Google

possession of the defendant ever since its purchase, with the exception of a short time when it was left to be repaired. It was in his possession, and being used by him, when this case was tried. There was nothing upon which to base the third instruction of the court—neither plea nor evidence to which the instruction was applicable. In this state of the case, the jury must have been misled to the plaintiff's prejudice.

The record also discloses that the court neglected to state to the jury the issues in the case. This of itself was reversible error. It is the duty of the court to inform the jury of the issues made by the pleadings.

Many other errors are assigned by the plaintiff, but, as the case must be reversed for error in the instruction above set out, we do not think it necessary to take time to review them.

It is recommended that the judgment be reversed and the case remanded.

ALBERT and AMES, CC., concur.

Reversed and remanded.

MUTUAL BEN. LIFE INS. CO. v. SIEFKEN et al.

(Supreme Court of Nebraska. Nov. 20, 1901.)

TAXES—LIEN—MORTGAGE—FORECLOSURE—APPRAISAL.

1. By virtue of section 138, art. 1, c. 77, Comp. St. 1901, and section 146, c. 12a, Id., taxes legally levied are a perpetual lien, superior to all others, upon the real estate taxed, so long as they remain due and unpaid to the government or municipality by whose authority they are levied.

2. *Held* not error to deduct the taxes due from the appraised value of the real estate sold as a lien superior to that of the mortgage foreclosed.

Commissioners' Opinion. Department No. 1. Appeal from District Court, Douglas County; Keysor, Judge.

"Not to be officially reported."

Action by the Mutual Benefit Life Insurance Company against Adolph Siefken and others. Judgment for plaintiff, and defendants appeal. Affirmed.

A. C. Troup, for appellants. Switzler & St. Clair, for appellee.

KIRKPATRICK, C. This is an appeal from an order of confirmation made by the district court of Douglas county. A decree of foreclosure was duly entered in favor of appellee and against appellants in the district court, upon which an order of sale issued, and on February 8, 1898, the property in controversy was sold by the sheriff of Douglas county, appellee being the purchaser. Objections were made to the appraisal before the day of sale, and later objections were made to the confirmation, for various reasons which need not be set out. The sheriff of Douglas county, together with two freeholders selected by him, appraised the value of appellants' interest in the property to be sold at $6,000. From this valuation they deducted $458.59, the amount of the taxes due on the property, as shown by the certificates of the treasurer of Douglas county and the treasurer of the city of Omaha. Only one question is presented by the record for consideration, and that is whether the taxes, the amount of which was deducted by the appraisers, were a lien upon the premises prior to the lien of the mortgage. Neither the county of Douglas nor the city of Omaha was made a party to the foreclosure suit, and the amount due on taxes was not set up or mentioned in the decree of the court. The decree adjudged the amount due on the mortgage to be a first lien, and it is contended by counsel for appellants that under this decree no authority exists for deducting the amount of taxes against the property as a prior lien.

The property did not sell for two-thirds of the $6,000, the gross value of appellants' interest, and, if the amount due as taxes was improperly deducted, the sale should be set aside. Section 138, art. 1, c. 77, Comp. St. 1901, regarding county and state taxes, is as follows: "The taxes assessed on real estate shall be a lien thereon from and including the first day of April in the year in which they are levied until the same are paid." Section 146, c. 12a, Comp. St. 1901, regarding municipal taxes, is as follows: "Municipal taxes and assessments upon all real estate in any such city are hereby made a perpetual lien thereupon from the day on which the same were levied against all persons or bodies corporate, except the United States and this state." From an examination of these sections there can be no doubt that it was the purpose of the Legislature to make the taxes, when properly levied and assessed, a lien superior to any other. State and municipal governments cannot exist in the absence of revenue for their support. It is the duty of every person residing in a state and receiving the benefits of government to contribute his share towards its support. And every piece of real estate, as well as personal property, in the state, should contribute its share towards the support of the state, county, and municipality where situated. Any one taking a mortgage, or securing a lien of any other character upon property, must take it with knowledge that such property is bound to pay its proportionate share of the taxes necessary to the maintenance of the government, and must understand that the obligation to contribute to the support of the government is something that attaches to the property itself, and that must, in the very nature of things, be superior to the lien he is about to take. For this reason it is no injustice to make the lien for taxes superior to all other liens. The right of a mortgagee to redeem from a tax sale is fixed by the Constitution (section

Digitized by Google

8, art. 9), and has been expressly recognized by this court. To hold that the lien of a mortgage was superior to that of taxes would be to give to the mortgagee rights superior to that of the owner of the fee. An obligation to pay taxes rests upon the owner of the land, and the same obligation rests upon the holder of a mortgage if he desires to protect his lien. Howell v. Essex Co. Road Board, 32 N. J. Eq. 672.

While the decree in the case at bar provides that it is a first lien, this only extends to the parties to that suit. If the contention of appellants should be sustained, and the amount due for taxes should not be deducted, the result would be that the purchaser at sheriff's sale would take the property divested of the lien for taxes. So far as we have been able to ascertain, it has always been held by this court that taxes were a lien superior to any other (Merriam v. Goodlett, 36 Neb. 384, 54 N. W. 686), and it seems to be the law in other jurisdictions as well (New England Loan & Trust Company v. Young, 81 Iowa, 732, 39 N. W. 116, 46 N. W. 1103, 10 L. R. A. 478; Williams v. Hilton [Me.] 58 Am. Dec. 729). The fact that section 146, which makes taxes levied by a municipality a lien, contains the word "perpetual," does not in any way modify or take from section 138, which makes taxes levied for state and county purposes a lien, the force which the language of that section imports, and, so long as they remain due to the government or municipality by whose authority they were levied, they are perpetual liens superior to any other. If, in fact, as we have found, the lien for taxes is a superior lien, then it reduced the actual value of appellants' interest in the premises by so much as appears to be due upon taxes. This being true, appellants cannot be heard to complain because the same was deducted by the appraisers from the gross valuation.

Again, it is contended by appellants that the statute requires that the certificates of the city and county treasurers shall be under their official seals, and that, inasmuch as the law does not contemplate or provide for an official seal for the county or city treasurer, they are unable to make a valid certificate. This contention is without merit. The taxes being actually due, the form of the certificate acted upon by the appraisers cannot be held to substantially affect the rights of the appellants. This question has already been determined by this court, and adversely to the contention of appellants. Northwestern Mutual Life Ins. Co. v. Marshall (Neb.) 95 N. W. 357.

It follows from what has been said that there is no error in the action of the trial court, and it is therefore recommended that the decree confirming the sale be affirmed.

DAY and HASTINGS, CC., concur.

Affirmed.

GERMAN INS. CO. OF FREEPORT, ILL., v. SHADER.

(Supreme Court of Nebraska. Oct. 1, 1901.)

INSURANCE—PAYMENT OF PREMIUMS—WAIVER—PLEADING AND PROOF.

1. A policy of fire insurance contained a clause to the effect that the policy should not become binding upon the company until the premium was actually paid, nor unless the premium was paid before the loss occurred. *Held*, such stipulations are reasonable and enforceable.

2. Such stipulations in a policy can be waived by the company, but such waiver must be pleaded and proved to avail the insured.

3. "The rule of law is inflexible that the allegations and the proof, allegata et probata, must agree." Traver v. Shaefle, 50 N. W. 683, 33 Neb. 531.

Commissioners' Opinion. Department No. 1. Error to District Court, Lancaster County; Cornish, Judge.

"Not to be officially reported."

Action by Arthur L. Shader against the German Insurance Company of Freeport, Ill. Judgment for plaintiff, and defendant brings error. Reversed.

Burr & Burr and Frank A. Boehmer, for plaintiff in error. C. O. Whedon, for defendant in error.

DAY, C. Arthur L. Shader brought this action in the district court of Lancaster county against the German Insurance Company of Freeport, Ill., to recover for a loss upon a fire insurance policy issued to him by said company through its local agent at Lincoln, Neb. The policy was issued and delivered to Shader January 15, 1896, and extended for a period of one year. The property covered by the policy was destroyed by fire February 7, 1896. The trial resulted in a verdict for the plaintiff, upon which judgment was subsequently rendered, to review which the defendant has brought error to this court.

The petition alleged the issuance and delivery of the contract of insurance, the payment of the premium at the time of the delivery of the policy on January 15, 1896, and the loss and damage by fire on February 7, 1896; and also set out, and made a part of the petition, a copy of the policy. The defendant answered, setting forth that one of the conditions and stipulations of the policy sued on provided: "That the policy should not become binding upon the defendant company until the premium was actually paid, nor unless the premium was paid before the loss occurs, and alleging that the premium was not paid before the fire occurred, nor was it at any time received by the defendant." To this answer the plaintiff replied by a general denial, and by an allegation that on or about February 1, 1896, the plaintiff gave his check to the agent of the defendant in payment of said premium, and that afterwards the said check was paid by the bank upon which it was drawn, and defendant received the said premium, and has ever since kept and retained the same.

¶ 2. See Insurance, vol. 28, Cent. Dig. §§ 1632, 1637.

Digitized by Google

The facts developed upon the trial upon the practically undisputed testimony were that, at the time of the issuance and delivery of the policy, the soliciting agent of the defendant agreed with the plaintiff that he might pay for the policy on February 25th; that there was no money or note or memorandum given at the time, and nothing further was said or done concerning the premium until after the loss; that, on the day after the fire, plaintiff gave the agent who had issued the policy his check for the amount of the premium, postdated February 25th; that the agent gave to the plaintiff a receipted bill for the premium, which bill was dated February 1st, and afterwards, on February 25th, the agent received the money on the check, but never forwarded it to the defendant company, because he had been informed that the company would not receive the same, and that he still has the money in his account at the bank.

The defendant asked for an instruction to the jury to return a verdict in favor of the defendant. The question raised by this request and by other objections at the trial is whether or not under the pleadings the plaintiff is entitled to recover upon the theory that the defendant had waived the provisions of the policy requiring the payment of the premium before the loss, and whether under the pleadings the plaintiff was entitled to show that the premium was paid after the loss, and that the company was thereby estopped.

The issue raised by the pleadings was whether or not the premium had been paid prior to the loss. It is true the plaintiff alleged in the reply that the check for the premium was given on or about February 1st, and was afterwards paid, and that the company received and retained the money. We do not think that this allegation can fairly be construed to be a pleading of facts which would constitute an estoppel upon the defendant. The mere receipt of the money by the soliciting agent after the loss would not in itself be an estoppel upon the company, because the duty and authority of the soliciting agent ordinarily is terminated at the loss. In order to constitute an estoppel by a receipt of the money for the premium after the loss, we think the plaintiff should have alleged and proved the payment after the loss, with knowledge of the fact that it was paid after the loss. This, the plaintiff did not allege in his reply, and the allegations were not sufficient to raise the question of estoppel, even if it had been so intended, which appears doubtful from the pleadings.

But granting that plaintiff relied upon an estoppel, and has sufficiently pleaded it, the evidence is insufficient to establish that the company ever received the money with knowledge of the facts in regard to its payment. It can scarcely be claimed that this allegation of the reply is sufficient to raise the question of waiver of the provision of the policy respecting payment of premium by the agent at the time of the issuance of the policy. The basis of the suit is the contract, which provides that it should not become binding on the defendant until the premium was actually paid, nor unless the premium was paid before the loss. Such provisions are held to be reasonable and enforceable. Phenix Ins. Co. v. Bachelder, 32 Neb. 492, 49 N. W. 217, 29 Am. St. Rep. 443. There is no allegation in the petition that the terms of the policy requiring payment of the premium in advance had been waived by the company; on the contrary, the petition alleged that all the conditions had been complied with. It can scarcely be claimed that the allegation of the reply is sufficient to raise the question of waiver of the provisions of the policy as to the time of payment of the premium. The rule is well established that a party relying upon a waiver of a condition precedent to the validity of a contract must properly plead such waiver. Livesey v. Omaha Hotel Co., 5 Neb. 50; Quick v. Sachsse, 31 Neb. 312, 47 N. W. 935; Phenix Ins. Co. v. Bachelder, 32 Neb. 490, 49 N. W. 217, 29 Am. St. Rep. 443; Eiseman v. Hawkeye, 74 Iowa, 11, 36 N. W. 780; Bernhard v. Washington Life Ins. Co., 40 Iowa, 442. A party cannot be permitted to allege full compliance with all of the conditions, and upon the trial change the issues by proving, or attempting to prove, that, while the conditions were not in fact complied with, they had been waived. If it had been alleged in the petition or in the reply, and no objection made thereto at the trial, that the company had waived the clause in the policy relating to the payment of premium, and the agent was shown to have authority to make such waiver, the evidence would then have been sufficient to submit the question to the jury. It has been held repeatedly by this court that the allegations and proofs must agree. In Traver v. Shaefle, 33 Neb. 531, 50 N. W. 683, it is said: "The rule of law is inflexible that the allegations and the proof, allegata et próbata, must agree." To the same effect, see Omaha Consolidated Vinegar Co. v. Burns, 44 Neb. 21, 62 N. W. 301; Imhoff v. House, 36 Neb. 28, 53 N. W. 1032.

It is therefore recommended that the judgment be reversed and the cause remanded.

HASTINGS and KIRKPATRICK, CC., concur.

Reversed and remanded. SULLIVAN, J., absent, not voting.

FARMERS' & MERCHANTS' INS. CO. v. GRAFF et al.

(Supreme Court of Nebraska. Oct. 16, 1901.)

DIRECTING VERDICT.

1. A peremptory instruction directing a verdict for plaintiff examined, and *held* error.

Digitized by Google

Commissioners' Opinion. Department No. 2. Error to District Court, Gage County; Stull, Judge.

"Not to be officially reported."

Action by Louis Graff and others against the Farmers' & Merchants' Insurance Company. Judgment for plaintiffs, and defendant brings error. Reversed.

Rose & England, for plaintiff in error. F. N. Prout and Griggs, Rinaker & Bibb, for defendants in error.

OLDHAM, C. Plaintiffs brought this action in the district court of Gage county, Neb., against the Farmers' & Merchants' Insurance Company, of Lincoln, Neb., to recover for a loss on a fire insurance policy issued by said company through its local agent at Beatrice, Neb. The policy was dated January 19, 1897, and was delivered to plaintiffs through the mail by the local agent of the defendant. The fire occurred on March 4, 1897.

The petition alleged the issuing and delivering of the policy of insurance and the payment of the premium on the 19th day of January, 1897, and the loss and damage by fire on the 4th day of March of the same year. A copy of the policy and all its conditions was set out in full in the plaintiffs' petition. Defendant answered, setting forth that one of the conditions contained in the policy sued on was: "That this company shall not be liable by virtue of this policy or by renewal thereof unless and until the whole premium therefor is actually paid," and that plaintiffs have not paid any part of said premium. The answer further sets out that O. P. Fulton, its local agent at Beatrice, after the loss had occurred, without any authority from the defendant, retained the amount of the premium from a collection in his hands in favor of the plaintiffs, and that as soon as the defendant was advised of this it refused to accept said payment, and tendered it back to the plaintiffs. Defendant alleged another defense, which it will not be necessary to discuss, as his cause will have to be retried for reasons hereinafter set forth. Plaintiffs filed a reply, in which they allege that the payment of the premium in cash at the time the policy was delivered was waived by the defendant; "that no demand was made on plaintiffs for the payment of said premium until after said loss had occurred; that on the day of said loss the defendant, by its duly authorized agent, O. P. Fulton, called upon the plaintiffs and demanded of the plaintiffs the amount of said premium, which was then and there paid to said agent, who then and there accepted said money and issued its receipt therefor." On issues thus joined, the court below directed a verdict for the plaintiffs, and defendant brings error.

The evidence introduced tending to show the alleged waiver of the payment of the premium was of this nature: One of the plaintiffs said that he had spoken to the local agent of the defendant about insuring this property and that he had said to the agent that he would take a policy from him, if he (the agent) would take some coal or lumber from plaintiffs' firm in payment of the premium, and that defendant's agent agreed that he would do so. That some time after this conversation he called on the agent and asked him for the policy, which the agent prepared and mailed to him. He admits that he asked for no extension of time, and that he executed no note for the payment of said premium. He also admits that he made no effort to pay the premium, either in coal, lumber, or cash, until after the fire had occurred, at which time he directed defendant's local agent to deduct $12 from a collection he had made for their firm as payment of the premium. Defendant's local agent, O. P. Fulton, denies emphatically that he ever agreed to take coal or lumber in payment of the premium. He also says that the plaintiffs never requested any forbearance in the time of the payment of the premium; that when he accepted the premium after the fire, and reported it to the defendant company, the defendant company refused to accept it, and directed him to tender it back to the plaintiffs, which he did.

So far as the defense of the nonpayment of the premium at the time of the fire is concerned, the evidence and the pleadings of this case stand on all fours with the case of the German Insurance Company of Freeport, Illinois v. Shader (decided by this court on October 1, 1901) 96 N. W. 604; and, in view of the doctrine laid down in that case, it was manifest error for the trial court to direct a verdict for plaintiffs in the condition of the pleadings and the record of the evidence as herein set out.

It is therefore recommended that the judgment of the district court be reversed and this case remanded.

POUND and SEDGWICK, CC., concur.

Reversed and remanded.

BLACK v. WEBBER.

(Supreme Court of Nebraska. July 10, 1901.)

CONTINUANCE—SICKNESS OF PARTY—CROSS-EXAMINATION—DEPOSITION—EXHIBITS.

1. A mere unsworn certificate of a physician that defendant is prostrated from the effects of la grippe and rheumatism, not able to be out, and that any exposure would be dangerous, together with affidavits of the party and his son that he is unable to sit up and has to be assisted from his bed from such causes, is not such a showing as indicates abuse of discretion in overruling a motion to continue for that cause a foreclosure suit already pending more than two years, especially when no reason appears why defendant's place cannot be fully supplied.

2. No error to refuse permission to go into new matter on cross-examination.

Digitized by Google

3. Exhibits sufficiently identified by marks of notary and testimony of witness, who saw them used, may be considered in connection with deposition, though not attached as stated.

Commissioners' Opinion. Department No. 1. Error to District Court, Red Willow County; Norris, Judge.

"Not to be officially reported."

Action by A. M. Webber against John Black. Judgment for plaintiff, and defendant brings error. Affirmed.

S. R. Smith, for plaintiff in error. Harlow W. Keyes, for defendant in error.

HASTINGS, C. This is a mortgage foreclosure suit, to which the defense is usury. From decree for plaintiff, the defendant brings error to this court. The errors complained of are: (1) Overruling of application for continuance on account of defendant's illness; (2) sustaining objection to question, on cross-examination of plaintiff's husband, whether she did not examine the security when loan was made; and (3) error in admitting exhibits to plaintiff's depositions, being the note, mortgage, and assignment on which the suit is brought.

As to the first error, the affidavits preserved in the bill of exceptions do not show any reason why his presence was necessary to fully develop the defense. If such showing were present, it would be impossible to say there was an abuse of discretion in overruling the application. The trial was on February 17, 1897. The action had been pending since November, 1894, and had been continued on various dilatory motions of defendant. It was pending at the trial term on motion to suppress depositions. This was overruled, and application to continue was made, on the ground of "unavoidable casualty preventing defendant from being present at the trial of the case on account of his sickness, as shown by the affidavits hereto attached." The affidavits are by A. C. Black, defendant's son, S. R. Smith, his attorney, and himself. Mr. Smith swears that on February 5th defendant came to him complaining of not feeling well, but said he expected to be at the trial; that on the 7th the son A. C. Black informed affiant that defendant was worse and bedfast with la grippe and rheumatism, and asked affiant to go to see him; that affiant did not go because it was Sunday, and on the next day affiant was compelled to attend court, and was unable to comply with a rule requiring applications for continuance to be on file before the call of the docket. On the 8th Mr. Smith took affidavits of both defendant and his son to such a state of facts as had been reported to him, and filed an unsworn certificate, of one who describes himself a "practicing physician," that on the 8th he made a professional visit to defendant, and "found him suffering and prostrated from the effects of rheumatism and la grippe. I hereby certify that he is not able to be out, and any exposure would be dangerous." On February 12th, without further showing, the application to continue was overruled. The showing as to the sickness of defendant consisted of these two affidavits of himself and son, sworn to before their own attorney, and this statement of the doctor, not even sworn to before the attorney. It is impossible to say that this action of the court was an abuse of discretion. The certificate of the doctor was not a showing the court was bound to regard, and the affidavits of the father and son, taken before their attorney, seem, aside from that fact, insufficient. The affidavits were amenable to a motion to strike them from the files. Collins v. Stewart, 16 Neb. 52, 20 N. W. 11. There must be an end of litigation, and the court was amply justified in requiring a stronger showing in this case, already well into its third year, and with no showing of any special requirement of defendant's presence.

The question to which objection was sustained, as to whether or not plaintiff had examined the land when the loan was taken, was not relevant to anything the witness Webber had testified concerning in his direct examination. It was not error to refuse such cross-examination.

The objection to the three exhibits seems to be founded on the fact that they were not actually attached to plaintiff's deposition, in which they are referred to as "exhibits attached." They were identified by the notary, and the identification signed by him. They were sworn to by the plaintiff's husband as the identical instruments used at the taking of her deposition. The note and mortgage were admitted by the answer, and the execution of the assignment is amply established. We see no error in their admission, and we discover nothing which calls for a reversal of the case.

It is therefore recommended that the judgment of the district court be affirmed.

DAY and KIRKPATRICK, CC., concur.

Affirmed.

CLARK et al. v. COLFAX COUNTY.

(Supreme Court of Nebraska. Dec. 4, 1901.)

TENDER—CONDITIONS—EXCESSIVE TAX—INTEREST.

1. Where a tender is accompanied by a condition, and the party to whom the tender is made makes no objection to such condition, but rejects the tender on the sole ground that the amount tendered is insufficient, the condition does not vitiate the tender.

2. Where a tax is levied in excess of the legal limit, a taxpayer is not restricted to the statutory remedy, but may tender the amount assessed against him, less such excess.

3. If such tender is rejected, and is kept good by the party making it, in an action for the recovery of such taxes no recovery can be had for interest accruing after such tender.

¶ 3. See Depositions, vol. 16, Cent. Dig. §§ 156, 157.

Commissioners' Opinion. Department No. 3. Error to District Court, Colfax County; Marshall, Judge.

"Not to be officially reported."

Action by Colfax county against S. H. H. Clark and others. Judgment for plaintiff, and defendants bring error. Reversed.

W. R. Kelly and E. P. Smith, for plaintiffs in error. J. A. Grimison and Geo. H. Thomas, for defendant in error.

ALBERT, C. This action was brought by Colfax county against the receivers of the Union Pacific Railway Company for taxes levied against the company for the year 1896. The defendants pleaded a tender of the amount due. As to such plea, the plaintiff replied by impliedly admitting that the amount alleged to have been tendered was tendered by the defendants, and alleging that such tender was accompanied by conditions upon which the defendants had no right to insist, and was therefore ineffectual. During the pendency of the action, the trial court made an order permitting the plaintiff to accept the amount of the tender, which had been paid into court, without prejudice to its rights in this case, in pursuance of which order it was paid to the plaintiff. A trial was had to the court, which resulted in a finding and judgment for the plaintiff for interest on the amount tendered from the date of the alleged tender to the date of the receipt of the money by the plaintiff in pursuance of the order hereinbefore mentioned. There is a specific finding "that the tender claimed and shown by the defendants was and is conditional, and therefore invalid as a tender." The defendants bring the case here on error.

From the specific finding above mentioned, taken in connection with the fact that plaintiff's recovery was limited to interest on the amount tendered, it is clear that the decision of the trial court is based wholly on the ground that the tender was not absolute, but conditional. At the time of the tender there was a dispute between the parties as to the amount legally due for taxes for the year 1896. This dispute grew out of a levy of 20 mills school district tax for a certain school district, and a levy of 11 mills school district bond tax for the same district. The defendants claimed that the total school tax for that district was 11 mills in excess of the limit fixed by section 24, subd. 14, c. 79, Comp. St. 1895, in force at that time, and applicable to said district, which provides "that the aggregate school tax shall in no one year exceed two per cent." The tenders covered all the taxes due, save such school tax, so far as the same was in excess of 2 per cent. The county treasurer refused to accept the tender, and based his refusal on the sole ground that the amount tendered was less than the amount specified on the tax list. The rule appears to be that where a tender is accompanied by a condition on which the party making the tender has no right to insist, and no objection is made to the condition, but the tender is refused on the sole ground that the amount tendered is insufficient, the accompanying condition does not vitiate the tender. Moynahan v. Moore, 77 Am. Dec. 468; Graham v. Frazier, 49 Neb. 90, 68 N. W. 367. Applying that rule, the tender of the defendants, having been found sufficient in amount by the trial court, was effectual, notwithstanding the condition accompanying it. But it is urged on behalf of the plaintiff that the defendants have mistaken their remedy; that they should have availed themselves of the provisions of section 144, art. 1, c. 77, Comp. St. 1895. Where taxes are levied in excess of the amount authorized by law, to the extent of such excess they are levied for an illegal and unauthorized purpose. C., B. & Q. R. Co. v. Nemeha County, 50 Neb. 393, 69 N. W. 958. As to such excess the levy is void. A void tax is no tax. That being true, the defendants occupy precisely the same position, so far as their rights in this case are concerned, that they would have occupied, had there been no excessive levy, and they had tendered the full amount of the tax levied against them, and the treasurer had arbitrarily demanded a larger amount. Will it be claimed that under such circumstances the defendants would be required to pay the excess arbitrarily demanded, and then pursue the circuitous statutory course to recover the excess? We think not, and to us it is equally clear that they were not required to pursue that course in this case.

It follows that the judgment of the district court should be reversed, and the cause remanded for a new trial, and we so recommend.

AMES and DUFFIE, CC., concur.

Reversed and remanded.

UNION STOCKYARDS NAT. BANK v. CAMPBELL.

(Supreme Court of Nebraska. Nov. 20, 1901.)

DEPOSITARY—TRUST FUND.

1. A depositary of a trust fund, who parts with no consideration and is not misled to his prejudice by reason of the deposit, is bound to restore the fund to the true owner on demand, although such deposit was made by an agent or trustee, and until such demand the depositary had no notice of its real character.

Commissioners' Opinion. Department No. 3. Error to District Court, Douglas County; Keysor, Judge.

"Not to be officially reported."

Action by David L. Campbell against the Union Stockyards National Bank. Judgment for plaintiff, and defendant brings error. Affirmed.

Kennedy & Learned, for plaintiff in error. Bartlett & Baldrige, for defendant in error.

AMES, C. The facts in this case important in the present inquiry are briefly as follows: The Campbell Commission Company being engaged in the live stock commission business, and having places of business at Omaha and Kansas City, Mo., W. H. Boyer & Co., live stock dealers at Omaha, shipped to the commission company at Kansas City a car load of cattle for sale in the ordinary course of business. The Kansas City branch received and sold the cattle, and received for them, net above expenses and commissions, $937.40. With this money they purchased from a Kansas City bank a cashier's check for that amount, payable to the order of Boyer & Co., and sent the same by mail to the Omaha branch, where it arrived the morning of July 12th. At that time the commission company was doing a deposit and check account business with the plaintiff in error, the Union Stockyards National Bank, where its account was, and for several days had been, overdrawn by more than the amount of the check. Independently of the check, Boyer & Co. were indebted to the commission company in the sum of $367.47. At the suggestion of the defendant in error, Campbell, who was a business agent of the latter company, Boyer & Co. indorsed and delivered the cashier's check to it, and received in lieu thereof its check for $569.93; being the difference between the cashier's check and the amount of Boyer & Co.'s indebtedness. On the morning of the same day the commission company failed, and went into the hands of a receiver appointed at Kansas City. At about 1 o'clock the cashier of the Omaha bank informed Campbell of this last-mentioned fact, and demanded of him the deposit of all funds of the commission company in his hands to the credit of its account with the bank. In compliance with this demand, Campbell deposited the cashier's check, which was afterwards collected, but which was insufficient in amount to make up the overdraft, and the bank did not afterwards make any payment to or on account of the commission company. Later in the afternoon the Boyer Company check on the Omaha Bank was presented for payment, and payment refused "for want of funds." Afterwards the rights and claims of Boyer & Co. arising out of the transaction were assigned, together with the check, to the defendant in error, who brought the action thereon. On trial, Campbell testified, over objection and exception, that at and before the above-mentioned exchange of checks it was agreed between him and Boyer & Co. that the indebtedness of the latter to the commission company should be paid out of the cashier's check. The inference sought to be drawn from this testimony is that though Boyer & Co., by means of the transaction, parted with the naked legal title to the check, and enabled Campbell to make such use of it as he did make, yet it was not the intent of the parties that the funds should by that means be divested of their trust character, or to impair the right of Boyer & Co. to pursue them as in other cases. The trial court drew this inference, and, there being no conflict in the evidence, instructed a verdict for the plaintiff, and the bank brought the case here by proceedings in error.

After some hesitation, we have adopted the view of the district judge. The commission company were authorized to sell the cattle and receive the pay for them. If, after having so done, they had deposited the funds thus derived in the Omaha bank, there can be no doubt that under authority of Cady v. South Omaha National Bank, 46 Neb. 756, 65 N. W. 906, reaffirmed in 49 Neb. 126, 68 N. W. 358, Boyer & Co. could have pursued them into, and recovered them from, the depository. It is equally clear, we think, that if the cashier's check had been made payable to the order of the commission company, and had been by it deposited in the Omaha bank, the same result would have followed, because the fact that the funds were changed into a check would not have obscured the nature of the transaction, or have prevented their being traced to their final destination. Neither does such obscurity arise from the fact that the check was made payable to the order of Boyer & Co., and by them indorsed and left with the commission company for such deposit, after the former company had appropriated a part of the proceeds to the payment of its indebtedness to the latter. The residue of the funds was still the property of Boyer & Co., and the exchange of checks was merely a convenient means of enabling them to settle their indebtedness, and to withdraw from the commission company, through the bank, the balance belonging to them. The above-quoted testimony of Campbell was not inadmissible, because, among other reasons, the same inference would have been drawn from the nature of the transaction in the absence of the agreement. Under circumstances like those of this case, the question of notice to the bank is immaterial. If the bank had parted with value or extended credit upon the faith of receiving the check made payable to the order of Boyer & Co., and indorsed by them, a new element would have been introduced, from which there might have been important consequences, but no fact of that nature is pleaded or proved. The bank is in no worse condition than it would have been if the check had never been indorsed or delivered to it. On the other hand, it is better off by the amount of Boyer & Co.'s previous indebtedness to the commission company, which it was enabled to retain out of it. Under such circumstances, it is not entitled to retain a trust fund for which it has parted with no consideration, and to which it has therefore acquired no right. Cady v. Bank, supra; Burtnett v. Bank, 38 Mich. 630; Davis v. Bank (Tex. Civ. App.) 29 S. W. 926. Such seems to be the weight of authority both in this country

and in England, and we are convinced that it rests upon sound and salutary principles.

It is recommended that the judgment of the district court be affirmed.

ALBERT and DUFFIE, CC., concur.

Affirmed.

GUNDRY v. BROWN et al.

(Supreme Court of Nebraska. Nov. 20, 1901.)

EXECUTION—SECOND APPRAISEMENT.

1. To authorize the sheriff to make a second appraisement of lands which he is about to sell under execution, it must affirmatively appear by the return of such sheriff that the property has been twice advertised and offered for sale, and that it remains unsold for want of bidders.

Commissioners' Opinion. Department No. 1. Appeal from District Court, Lancaster County; Cornish, Judge.

"Not to be officially reported."

Action by Joseph Gundry against S. Brown and others. Judgment for plaintiff, and the Clark & Leonard Investment Company appeals. Reversed.

S. L. Geisthardt, for appellant. T. M. Lambertson, for appellee.

KIRKPATRICK, C. This is an appeal from an order of the district court of Lancaster county made March 15, 1898, confirming a sale of real estate. The record discloses that the property in question was appraised first on March 17, 1896. After being advertised as required by law, it was, on the 11th day of August, 1896, offered for sale by the sheriff, and returned sold to plaintiff, Joseph Gundry; that portion of the sheriff's return requiring consideration being as follows: "After having so advertised the same for more than thirty days, and at the time and place stated in said notice, I offered the said lands and tenements for sale at public auction, and sold the same as follows, to wit [describing property sold] to Joseph Gundry." On September 11, 1896, plaintiff, Gundry, filed a motion to vacate and set aside the sale and to quash the sheriff's return on the ground that the bid was unauthorized on his part. This motion was supported by an affidavit, and on November 16, 1896, the court sustained the motion, vacated the sale, and quashed the sheriff's return. The property was again advertised for sale, and on May 25, 1897, was again offered and returned not sold for want of bidders, the material part of the return being as follows: "After having so advertised the same for more than thirty days, and at the time and place stated in said notice, I offered the said lands and tenements for sale at public auction, and the same were not sold for want of bidders." A new order of sale was then taken out, and a new appraisement made at a lower figure, and the sale complained of was made for two-thirds of the last appraisement.

The simple question presented by the record is, was the property twice offered for sale, and remained unsold for want of bidders, in accordance with the requirements of section 495 of the Code, so as to authorize the second appraisement under which the sale was made? This section of the statute is as follows: "In all cases where real estate may hereafter be levied upon, by virtue of any execution or order of sale, and shall have been appraised, and twice advertised and offered for sale, and shall remain unsold for want of bidders, it shall be the duty of the officer to cause a new appraisement of such real estate to be made, and successive executions or orders of sale may issue at any time in vacation, after the return of the officer 'Not sold for want of bidders,' at the request of the plaintiff or his attorney." The statute is too plain to admit of construction, and means what it says, namely, that the property shall be twice advertised and offered and remain unsold for want of bidders. Section 498 provides for confirmation of sale, and is in part as follows: "If the court, upon the return of any writ of execution or order of sale for the satisfaction of which any lands and tenements have been sold, shall, after having carefully examined the proceedings of the officer, be satisfied that the sale has in all respects been made in conformity to the provisions of this title, the court shall direct the clerk to make an order," etc. Under this section it must be made affirmatively to appear that all statutory provisions have been fully complied with, or the sale is invalid. The only way the officer having the order of sale can be heard to speak is through his return, and the return must therefore show that the property was twice advertised and twice offered for sale, and that it remained unsold for want of bidders. This the return fails to do. One return shows the property was sold. It is true, this return was quashed, and the sale set aside, because the bid was unauthorized, but there is no return to take the place of the one quashed, and to show affirmatively that there were no other bids and no other bidders. There might have been other bidders at the first sale, ready to bid the amount bid by plaintiff. If the bid made was sufficiently real to deceive the sheriff, it might have deceived other bidders who were willing to bid two-thirds of the appraised value, but in good faith believed the property was sold to plaintiff. If there were no bids except the unauthorized bid for plaintiff, and no other bidders present and ready to bid when the property was first offered, the sheriff's return should have been amended to show that fact. To authorize the sheriff to make a second appraisement of lands he is about to sell under execution, it must affirmatively appear by the return of such officer that the property has been twice advertised and offered for sale, and that it remained unsold for want of bidders. As it

Digitized by Google

does not affirmatively appear that the property was twice advertised and offered for sale and remained unsold for want of bidders, there was no authority to make the new appraisement.

It is therefore recommended that the action of the district court confirming the sale be reversed, and the cause remanded to the district court for further proceedings in accordance with this opinion.

DAY and HASTINGS, CC., concur.

Reversed and remanded.

HUBER MFG. CO. v. GOTCHALL.

(Supreme Court of Nebraska. July 10, 1901.)

TRIAL—SPECIAL FINDINGS—CONVERSION—EVIDENCE—INSTRUCTION.

1. Interrogatories for special findings may be submitted to the jury or refused, in the discretion of the trial court; and, unless there has been an abuse of discretion in that regard, the ruling will not be disturbed. Murphy et al. v. Gould, 59 N. W. 383, 40 Neb. 728, followed.

2. An instruction examined, and *held* to have been properly refused.

3. Evidence examined, and *held* sufficient to sustain the judgment.

Commissioners' Opinion. Department No. 2. Error to District Court, Lancaster County; Hall, Judge.

"Not to be officially reported."

Action by William Gotchall against the Huber Manufacturing Company. Judgment for plaintiff. Defendant brings error. Affirmed.

Kelley & Browne, for plaintiff in error. Stewart & Munger, for defendant in error.

OLDHAM, C. In this case the defendant in error (herein styled the "plaintiff") sued the plaintiff in error (herein styled the "defendant") in the district court of Lancaster county, Neb., alleging that the defendant had wrongfully converted a threshing machine and separator belonging to the plaintiff. The defendant answered, setting up a chattel mortgage executed by the plaintiff on the property in controversy, and that a default had been made in the condition of the mortgage, and that the property had been taken and sold as provided for in the condition in said mortgage. Plaintiff replied, admitting the execution of the note and mortgage, but alleged that for a valuable consideration the time of the note had been extended one year, and that under such agreement the mortgage debt was not due when the machine was taken by plaintiff. The cause was tried to a jury, and verdict was returned for plaintiff, and defendant brings error.

The consideration which plaintiff alleged to have been given for an extension of the time of the payment of the note was the assignment to the defendant of the accounts due the plaintiff for threshing for the year 1891. The first alleged error to which our attention is called by the brief of the defendant is that the verdict is not sustained by sufficient evidence. An examination of the bill of exceptions shows that the evidence introduced by plaintiff tended to show that when his note came due in the fall of 1894 he found that he would be unable to meet it on account of the fact that there was little grain raised that year, and he had but a limited use for his machine; that he thereupon went to the collecting agent, and told defendant's agent that, if he would give him another year in which to meet the note due on the machine, he would turn over to him all the accounts due him from threshing that year; and that defendant's agent agreed to this, and that plaintiff thereupon, by direction of plaintiff's agent, went with one of the defendant's collecting agents to the different persons owing plaintiff for threshing during the year of 1894, and directed them to pay their accounts to defendant's agent, which they did. The evidence further shows that in the spring of 1895, and before the year had expired, defendant took the machine, and sold it at private sale, as provided in one condition of the mortgage. Defendant did not deny receiving the payments of these accounts, but claimed that it took them only in part payment of the note then due, and denied an agreement to extend the time of the payment of the note on account of the assignment of these accounts. This question, however, was fairly submitted to the jury under proper instructions by the trial court, and we think there was submitted evidence tending to support the verdict of the jury, and for that reason it should not be disturbed by this court.

The next objection to which our attention is called is as to the action of the trial court in refusing to submit special interrogatories to the jury, as requested by the defendant. A request for the submission of special interrogatories to a jury has long since been held to rest in the sound discretion of the trial court, and, unless there has been a manifest abuse of this matter, will not be disturbed by this court. Floaten v. Ferrell, 24 Neb. 347, 38 N. W. 732; Murphy v. Gould, 40 Neb. 728, 59 N. W. 383.

Defendant also complains of the action of the trial court in refusing paragraph 10 of instructions requested by defendant, which was as follows: "If you believe from the evidence that Gotchall, on his part, agreed with McMullen to turn all his threshing accounts as a consideration for an extension of time of payment, and if you believe that Gotchall did not turn over all his accounts—in other words, keep his contract on his part—then he cannot insist on the performance of the contract on the part of the defendant." This instruction, we think, was properly refused, because there was no evidence to support such an instruction, and no such an issue as this was tendered either in the pleading or evidence offered by the defendant. Defendant denied emphatically any

Digitized by Google

Another objection urged by the defendants is that plaintiff failed to show that no proceedings at law had been had for the recovery of the debt. An allegation to that effect in the petition was put in issue by the general denial of the defendants. Such allegation has been held to be material, and one that must be established by the proof. Kirby v. Shrader, 58 Neb. 316, 78 N. W. 616. No proof was offered in support of the allegation. The omission in this regard is fatal to the decree, nor will the fact that such allegation was met by a general, instead of a specific, denial, operate to relieve the plaintiff from the effect of such omission. Kirby v. Shrader, supra.

We recommend that the decree of the district court be reversed, and the cause remanded for further proceedings according to law.

AMES and DUFFIE, CC., concur.

Reversed and remanded.

COMMERCIAL STATE BANK v. KETCHUM et al.

(Supreme Court of Nebraska. June 19, 1901.)

JUDGMENT—INJUNCTION—RES JUDICATA—ATTORNEY'S LIEN—APPEAL—REVIEW.

1. Insolvency of the judgment creditor is sufficient ground for a suit by a judgment debtor to enjoin collection of the judgment for the purpose of enforcing a set-off.

2. A prior ruling of one district judge vacating a temporary injunction on the ground that the petition does not state a cause of action does not preclude another judge of the court, when the cause comes before him on final hearing, from rendering a decree upon such petition in accordance with its prayer.

3. Where a decree enjoining collection of a judgment and allowing a set-off against it conditions the injunction upon payment into court of a sum more than sufficient to satisfy an attorney's lien upon such judgment, it is unnecessary to consider the relative priorities of the right to a set-off and such attorney's lien.

4. As a general rule, this court will review a case only with reference to the theory adopted by the parties in the trial court. This rule is particularly applicable where a party who has procured a decree upon one theory seeks a modification thereof in this court upon a different theory.

Commissioners' Opinion. Department No. 2. Appeal from District Court, Dawes County; Sullivan, Judge.

"Not to be officially reported."

Action by the Commercial State Bank of Crawford against William H. Ketchum and others. Judgment for plaintiff, and defendants appeal. Affirmed.

Allen G. Fisher and Frank Irvine, for appellants. A. W. Crites, for appellee.

POUND, C. The plaintiff held certain notes secured by a chattel mortgage upon a printing plant. The makers of the notes sold the property to the defendant Ketchum, who assumed the mortgage. The purchaser added other property to the plant, and gave a new mortgage thereon to secure the notes. Upon his failure to meet the notes after maturity, the plaintiff replevied the property mortgaged, and sold it under the mortgage, not realizing, however, a sufficient sum to pay the debt. Afterwards motion was made to quash the writ of replevin for insufficiency of the affidavit on which it issued, and the plaintiff, being denied leave to amend, and the ruling of the court to that effect being affirmed on petition in error, went out of court. The defendant had a jury impaneled to assess his damages, and recovered judgment for the value of the property. This suit was brought to enjoin the enforcement of that judgment for the purpose of obtaining a set-off of the amount due on the mortgage debt. A decree was rendered allowing the set-off and enjoining enforcement of the judgment, from which this appeal has been taken.

The petition and the finding of the court that the defendant Ketchum was insolvent, and that the original makers of the note had left the state, were sufficient to sustain such a decree. It is well settled that the provisions of the Code of Civil Procedure with respect to set-off are not exclusive, and that insolvency of a party against whom set-off is sought is a sufficient ground for equity to allow it. Thrall v. Omaha Hotel Co., 5 Neb. 295, 25 Am. Rep. 488; Wilbur v. Jeep, 37 Neb. 604, 56 N. W. 198; Richardson v. Doty, 44 Neb. 73, 62 N. W. 254. This power exists after judgment, where the judgment creditor is insolvent (Stenberg v. State, 48 Neb. 299, 316, 67 N. W. 190), and is exercised in a suit to enjoin collection of the judgment and enforce the set-off. 22 Am. & Eng. Encyclopedia of Law, 417–419; Beach on Injunctions, § 619. Complaint is made that the finding as to insolvency is not sustained by the evidence, but we find the evidence upon that point sufficiently clear and convincing.

The decree is further objected to for the reason that prior to final hearing the cause had been before another judge sitting in the same district upon motion to dissolve a temporary injunction, and the latter, in vacating the injunction, had held that the petition did not state a cause of action. In support of this objection we are cited to Marvin v. Welder, 31 Neb. 774, 48 N. W. 825. We have already expressed ourselves against any application of the rule announced in that case which would preclude a court at final hearing from rendering a decree contrary to prior rulings upon demurrer in the same cause. Perry v. Baker (Neb.) 86 N. W. 692. The reasons are even stronger for denying such binding force to the rulings of the district judge upon mere interlocutory applications.

Another ground of complaint has reference to an attorney's lien upon the judgment, which, it is claimed, should have priority over the set-off. But the court ordered the

¶ 1. See Judgment, vol. 30, Cent. Dig. § 830.

Digitized by Google

plaintiff to pay into court a sum more than sufficient to satisfy such lien as found in the decree, and conditioned the injunction upon the payment of such sum. As sufficient moneys will be available to meet the lien as fixed by the decree in any case, we need not consider its relative priority with the set-off as an abstract question. A large number of rulings in interlocutory proceedings and in the admission and rejection of evidence are also complained of. But the former did not contribute to the decree, and the latter are not reviewable, as such, on appeal. Zimmerman v. Zimmerman, 59 Neb. 80, 80 N. W. 643.

There is also a cross-appeal by the plaintiff, based upon certain decisions of this court subsequent to the hearing below, by reason whereof it is contended that the judgment enjoined was absolutely void. But we do not think the plaintiff should be permitted to raise such a point at this time. It sued upon the theory that the judgment was valid, tried its case on that theory, and obtained a decree accordingly. The general rule is that this court will review a case only with reference to the theory adopted by the parties in the trial court. Shaw v. Robinson, 51 Neb. 164, 70 N. W. 953. This rule has been enforced to prevent shiftings of position as to the construction of instruments sued on (Woodward v. Baird, 43 Neb. 310, 61 N. W. 612), and as to the defense relied upon (Graves v. Norfolk Nat. Bank, 45 Neb. 840, 64 N. W. 225), and it seems particularly applicable where a party who has procured a decree upon one theory seeks a modification thereof in this court upon a different theory.

We recommend that the judgment be affirmed.

OLDHAM and SEDGWICK, CC., concur.

Affirmed.

FRIEDEN v. CONKLING et al.

(Supreme Court of Nebraska. Sept. 17, 1903.)

JUDGMENT—ASSIGNMENT—GOOD FAITH—INSTRUCTIONS.

1. Evidence examined, and *held* sufficient to show that an assignment of a judgment was not bona fide, but was colorable, and made for the purpose of evading the exemption laws of this state.

2. Instruction examined, and *held* not erroneous.

3. It is not error to refuse an instruction tendered, where the ground covered thereby is fully covered by an instruction given by the court on its own motion.

Commissioners' Opinion. Department No. 2. Error to District Court, Douglas County; Slabaugh, Judge.

"Not to be officially reported."

Action by William Conkling against S. Frieden and others. Judgment for plaintiff. Defendant Frieden brings error. Affirmed.

Courtright & Sidner, for plaintiff in error. W. A. Foster and Alex. Altschuler, for defendants in error.

ALBERT, C. This action was brought by William Conkling against S. Frieden, Alex Altschuler, and A. H. Haynes, to recover for the unlawful garnishment of wages exempt from execution. It is alleged in the petition that the plaintiff is a married man, the head of a family, a resident of the state of Nebraska, and an employé of the Union Pacific Railroad Company; that on the 5th day of November, 1900, the defendant Frieden recovered a judgment against the plaintiff before a justice of the peace in Douglas county, and thereafter, on the 7th day of August, 1901, acting upon the advice and counsel of the defendant Altschuler, made a pretended assignment of said judgment to the defendant Haynes, who brought an action thereon in Council Bluffs, Iowa, caused a writ of attachment to be issued thereon, and the said railroad company to be garnished as the supposed debtor of the plaintiff, and thereby seized exempt wages due and owing to the plaintiff from said railroad company in the sum of $129, whereby the plaintiff sustained damages in the sum of $146.20. The defendants Frieden and Altschuler answered, admitting that the plaintiff is a married man, the head of a family, a resident of the state, and an employé of said railroad company, and the recovery of the judgment by the defendant Frieden in Douglas county, but denying all the other allegations of the petition. The defendant Haynes made default. The jury returned a verdict for the plaintiff. The defendant Frieden brings the case here on error.

It is first insisted that the verdict is not sustained by sufficient evidence, in that it does not appear that the sale of the judgment by Frieden to Haynes was made for the purpose of evading the exemption laws of this state, nor that it was not made in good faith. Frieden, testifying in his own behalf, disclaimed any intention to evade the exemption laws, and insisted on the good faith of the transaction, so far as he was concerned. But he recovered the judgment in Douglas county, and in his attempts to enforce it there discovered that the plaintiff was a married man, the head of a family, and a resident of the state of Nebraska, and that his earnings from the Union Pacific Railroad Company were exempt from execution. He also satisfied himself that the judgment could not be collected in this state. Afterward, with the knowledge of these facts, he consulted his codefendant Altschuler, an attorney, in regard to the collection of the judgment. Altschuler told him, in effect, that the defendant Haynes might buy the judgment, and Frieden then executed an assignment of the judgment, and left it with Altschuler. Afterward suit was brought on the judgment in Council Bluffs, in which a writ of attach-

Digitized by Google

ment was issued, and the wages due the plaintiff were seized thereunder. These facts, taken in connection with the other circumstances, which it would take too long to detail, are amply sufficient to warrant the jury in finding that the assignment was merely colorable, and made for the purpose of evading the exemption laws of this state. Bishop v. Middleton, 43 Neb. 10, 61 N. W. 129, 26 L. R. A. 445.

It is next insisted that the court erred in giving the first paragraph of its charge to the jury. That paragraph is merely a summary of the pleadings. It is not claimed that it contains anything not found in the pleadings, that it omits any material matter pleaded, nor that it is unfair in any way. The only complaint urged against it is that "it is erroneous for want of facts to base it on." As it is based on the pleadings, and does not purport to state any proposition of law, the complaint is unfounded.

It is next insisted that the court erred in refusing to give instruction No. 2 asked by the defendant, to the effect that, to entitle the plaintiff to recover against the defendant Frieden, the jury should find that he did not make an actual assignment of his judgment to the defendant Haynes, but that, on the contrary, it was a pretended assignment only, and made for the purpose of evading the exemption laws of the state of Nebraska. The ground covered by that instruction is fully covered by an instruction given by the court on its own motion; consequently the refusal to give it was not reversible error.

It is therefore recommended that the judgment of the district court be affirmed.

BARNES and GLANVILLE, CC., concur.

PER CURIAM. The conclusions reached by the Commissioners are approved, and, it appearing that the adoption of the recommendations made will result in a right decision of the cause, it is ordered that the judgment of the district court be affirmed.

KREADER v. CITY OF FREMONT.

(Supreme Court of Nebraska. Sept. 17, 1903.)

MUNICIPAL CORPORATION—LIABILITIES—VIOLATION OF ORDINANCE—FEES.

1. Fees of officers and witnesses for services rendered in a prosecution for the violation of an ordinance of a city, either in police court or in district court upon appeal, cannot be collected from such city, unless their payment by the city is required by statute or by ordinance authorized by statute.

(Syllabus by the Court.)

Commissioners' Opinion. Department No. 2. Error to District Court, Dodge County; Hollenbeck, Judge.

Action by John M. Kreader against the city of Fremont. Judgment for defendant, and plaintiff brings error. Affirmed.

¶ 1. See Costs, vol. 13, Cent. Dig. §§ 1082, 1125.

Courtright & Sidner and G. G. Martin, for plaintiff in error. E. F. Gray and C. E. Abbott, for defendant in error.

GLANVILLE, C. The defendant in error is the sheriff of Dodge county, and as such served papers in a case pending in the district court of that county, wherein a certain defendant was being prosecuted for the violation of an ordinance of the defendant city; the case being there upon appeal from police court. He also took assignments of certain fees claimed by the clerk of the district court, sundry witnesses who had appeared for the prosecution in the police court and in said district court, and the fees of the police judge of defendant city; all these fees being claimed in connection with the same prosecution. He filed his claim with the city council, and, upon its disallowance, appealed to the district court, where issues were joined, and trial proceeded through the introduction of evidence on behalf of the plaintiff in error, whereupon the court instructed a verdict for the defendant in error, and the case is before us upon such assignments, requiring us to pass upon the correctness of such instruction.

The only question necessary for us to pass upon is the one touching the liability of the defendant city for the payment of these fees, or any of them. It is the law of this state that such prosecutions are criminal actions, and must be carried on in the name of the state. Any fines collected as a result of such prosecutions go to the school fund, and the city, for the violation of whose ordinances the state is prosecuting, is not a party to the action. No statutory provisions have been called to our attention, and in fact none exist in this state, fixing a liability for such fees as are herein sued for upon the municipality whose ordinance forms the basis of the prosecution. It is a well known proposition of law, too thoroughly established to require argument or citation of authorities, that unless provision is made by statute for the compensation of members of society and public officers who are required to perform duties in assisting the state to maintain order and prosecute violators of its laws, they may not demand compensation for such services; that as members of society, this duty may be placed upon them without compensation, and as public officers, if the duty is required, and no compensation fixed by law therefor, with provision made for its payment, the fees or salaries allowed such officers in other respects is supposed to be their compensation for such services rendered. Such being the law, and there being no statutory liability fixed upon the defendant city, it follows that the judgment of the district court is right, and should be affirmed.

We therefore recommend that the judgment of the district court be affirmed.

ALBERT and BARNES, CC., concur.

Digitized by Google

PER CURIAM. For the reasons stated in the foregoing opinion, the judgment of the district court is affirmed.

CRANCER & CURTICE CO. v. McKINLEY MUSIC CO.

(Supreme Court of Nebraska. Sept. 17, 1903.)

PETITION IN ERROR—TRANSCRIPT.

1. Upon petition in error to this court, the proceedings of the district court can be shown only by a transcript of the records of that court, duly certified. Affidavits cannot be used to supply omissions in such transcript.

(Syllabus by the Court.)

Error to District Court, Lancaster County; Holmes, Judge.

Action by the McKinley Music Company against the Crancer & Curtice Company. Judgment for plaintiff, and defendant brings error. Affirmed.

Burr & Burr, for plaintiff in error. J. A. McGraw and Mockett & Polk, for defendant in error.

SEDGWICK, J. This case is brought here upon petition in error from the district court of Lancaster county. The transcript filed with the petition in error is certified to by the clerk of that court to be a true and correct transcript of the petition and answer, and various other proceedings specified in the certificate, but does not purport to contain any "amended answer." It is conceded by counsel for both parties in their briefs that the case was appealed from the county court of Lancaster county, but there is nothing in the transcript to show that fact, except there is copied in the transcript a paper entitled "Answer in the county court of Lancaster county, Nebraska." This does not purport to have been certified to in any manner by the county court as the original answer filed in that court, nor as a true copy thereof. The plaintiff in the district court filed a petition alleging a cause of action for certain goods sold to the defendant. The defendant filed an answer, admitting the allegations of the petition, and alleging a counterclaim for damages. A general demurrer was filed to this answer, which was sustained by the court, to which ruling the defendant excepted; but the record shows that the defendant thereupon took leave to file an amended answer, and subsequently took leave to amend his answer already filed by interlineation. Neither of these amendments appears to have been made, but the action of the defendant in taking such leave would be a waiver of the error, if any, of the district court in sustaining the demurrer to his answer. Afterwards it appears that a motion was made to strike an amended answer from the files, for the reason that "the same states a new and different cause of action from that upon which this case was tried in the county court." This motion was sustained by the court, and the defendant excepted, and has brought the case here for review, alleging now that the court erred in striking the amended answer from the files. Both parties in their briefs assume that the answer was amended by interlineation, but there is nothing in the record which shows what that amendment was. The answer copied in the record does not purport to be an amended answer, and there is nothing in the record to show that the paper copied in the transcript is in fact the amended answer, which was stricken from the files by the order complained of. An attempt appears to have been made to remedy some of these defects by affidavits, but the proceedings of the district court must be shown by a transcript of the records of that court, duly certified; it cannot be done by the affidavits of the party interested. The defects referred to, and others, arising from the careless manner of making up the record before us, are pointed out and insisted upon by defendant in error, and, of course, cannot, under such circumstances, be disregarded.

No error appearing, the judgment of the district court is affirmed.

MERRILL v. VAN CAMP et al.

(Supreme Court of Nebraska. Sept. 17, 1903.)

SECOND APPEAL—LAW OF THE CASE.

1. This case having been decided upon a former appeal upon substantially the same record as that now before us, the former decision is adhered to.

Commissioners' Opinion. Department No. 1. Appeal from District Court, Douglas County; Keysor, Judge.

"Not to be officially reported."

Suit by H. A. Merrill against Charles L. Van Camp and others. Decree for plaintiff, and defendants appeal. Affirmed.

H. P. Leavitt, for appellants. Hall & McCulloch, for appellee.

AMES, C. This is an action to foreclose the lien of a tax-sale certificate. The case was before this court at a former term, when it was held that the description in the certificate of the land sought to be affected was not so indefinite as to render the instrument void, if the premises intended could be identified by extrinsic evidence. Merrill v. Van Camp (Neb.) 96 N. W. 344. It was further held that, by the pleadings and the evidence contained in the record then presented, such an identification as was required had been made. A decree of the district court dismissing the action was therefore reversed, and the cause remanded for further proceedings. Such proceedings were accordingly had, and a decree of foreclosure and sale was rendered in accordance with the opinion of this court. From this latter decree, this appeal is prosecuted.

It is not pretended that the identification

Digitized by Google

by the record now presented is in any respect or degree less complete than by that brought here on the former appeal, nor that, in this respect, the two records differ in any essential particular. The sufficiency of the description is the only question discussed upon this appeal, and since that was formerly decided, we recommend that the judgment of the district court be affirmed.

HASTINGS and OLDHAM, CC., concur.

PER CURIAM. The conclusions reached by the Commissioners are approved, and, it appearing that the adoption of the recommendations made will result in a right decision of the cause, it is ordered that the judgment of the district court be affirmed.

TAYLOR et al. v. WECKERLY.

(Supreme Court of Nebraska. Sept. 17, 1903.)

BANKS—INSOLVENCY—ASSETS—APPEAL—DEFECT OF PARTIES—EVIDENCE.

1. While section 35, c. 8, Comp. St. 1901, provides for the delivery of the assets of an insolvent bank to the officers, stockholders, or owners furnishing such bond, a delivery thereof to one of several parties entitled thereto by virtue of the statute does not relieve the sureties on such bond from liability thereon, where by their acts they assent to such delivery and ratify it.

2. The question of a defect of parties, and of the legal capacity of the plaintiff to maintain an action, cannot be successfully urged for the first time in this court.

3. Evidence examined, and *held* sufficient to sustain the finding of the trial court.

(Syllabus by the Court.)

Commissioners' Opinion. Department No. 8. Error to District Court, Douglas County; Keysor, Judge.

Action by James M. Weckerly against Cadet Taylor and others. Judgment for plaintiff, and defendants bring error. Affirmed.

A. S. Churchill, for plaintiffs in error. Arthur C. Wakeley, for defendant in error.

ALBERT, C. In June, 1896, the state bank examiner reported the defendant bank insolvent to the state banking board, which thereupon directed the Attorney General to institute proceedings for the appointment of a receiver; the examiner retaining possession of the assets of the bank. Afterward, in the same month, H. O. Devries, president, Cadet Taylor, vice president, Daniel T. Mount, a director, and the Globe Loan & Trust Company, a stockholder, of the bank, furnished a bond, in compliance with the proviso in section 35, c. 8, Comp. St. 1901, for the voluntary liquidation of the liabilities of the bank within three years from the date of the bond. The bond was approved by the state banking board, which thereupon directed the bank examiner, in custody of the assets of the bank, to turn them over to Cadet Taylor, one of the parties furnishing the bond, which was accordingly done. On the 30th day of March, 1896, and before the bank had been found insolvent, it issued a certificate of deposit to James M. Weckerly, the plaintiff, for $1,050, payable seven months after date, which was wholly unpaid after the time fixed in the bond for the liquidation of the liabilities of the bank, and at the commencement of the action. This action was brought on the bond by the plaintiff against all the obligors to recover the amount due on the certificate of deposit. While the action was pending in the district court, the defendant H. O. Devries died, and the action was revived in the name of his administratrix.

The petition, among other things, alleges that upon the approval of the bond, the state banking board turned over the assets of the bank to the parties furnishing the bond, namely, the defendants Cadet Taylor, H. O. Devries, David T. Mount, and the Globe Loan & Trust Company, who thereupon took and assumed, and who has ever since remained in, possession and control thereof. The bank made default. The other defendants answered, denying that the assets had been turned over to the said parties furnishing the bond, and alleging that the assets were turned over to Cadet Taylor alone, who thereupon took, and has ever since been in, possession and control thereof. The reply denies that the assets were turned over to Cadet Taylor alone, but avers that, if they were nominally delivered to Taylor, they were so received by him for and in behalf of himself and the other defendants furnishing the bond, and with the knowledge, approval, and ratification of all the defendants; that whatever has been done by said Taylor with respect to the custody, management, and disposition of the assets of the bank has been done for the use and benefit, and with the consent and direction, of the makers of the bond, for the purpose of receiving the benefits of the statute heretofore mentioned. The foregoing condensation of the pleadings shows the only questions of fact litigated in the case. There was a trial to the court without a jury, and a finding and judgment for the plaintiff. The answering defendants bring error.

The main contention of the defendants is that the assets were not delivered to H. O. Devries, Cadet Taylor, David T. Mount, and the Globe Loan & Trust Company, the parties furnishing the bond, but to Taylor alone, and consequently the defendants are not liable on the bond, because section 35, supra, providing for such bond, requires the state banking board to turn over the assets "to the officers, stockholders or owners furnishing the bond." It will be conceded that the section referred to, so far as material, is a part of every offer implied by the tender of

¶ 2. See Appeal and Error, vol. 2, Cent. Dig. §§ 1121, 1186.

Digitized by Google

a bond in pursuance of its provisions. That being true, when the parties tendered the bond in question to the state banking board, it amounted to an offer on the part of the obligors to be bound by the terms thereof, provided the state banking board would turn over to the parties furnishing the bond the assets of the bank. Like any other offer, it would not become binding until accepted. It is elementary that an offer, to become binding, must be accepted as made, unless the party making the offer assent to a qualified acceptance. The evidence in this case is conclusive that the offer, implied by the tender of the bond in question, was not accepted and acted upon by the state banking board in the precise terms in which it was made, because the formal delivery of the assets was made by the banking board to but one of the parties furnishing the bond. But the evidence is ample to sustain a finding that while this is true, the other parties to the action assented to such qualified acceptance, and, to some extent, at least, joined with the party to whom the assets were delivered in the control and management of the assets. That being true, they are in no position now to urge that the delivery to Taylor was unauthorized, nor that it absolves them from liability on the bond.

Another question ably presented by the defendants in the argument is that the penalty named in the bond is in the nature of a trust fund for the benefit of all the creditors, and that a single creditor of the bank cannot maintain an action on the bond in his own name, and for his exclusive benefit. But this question was not raised, either by demurrer for defect of parties, or for want of legal capacity of plaintiff to maintain the action, nor does it appear to have been raised in any way, save in the argument addressed to this court. We think the objection comes too late to be available, whatever its merits had it been presented opportunely.

It is recommended that the judgment of the district court be affirmed.

AMES and DUFFIE, CC., concur.

PER CURIAM. For the reasons stated in the foregoing opinion, the judgment of the district court is affirmed.

MERRILL v. GARVER.

(Supreme Court of Nebraska. Sept. 17, 1903.)

CONTRACT—NOTICE OF REPUDIATION—WAGER—EVIDENCE—BRIEF—SUFFICIENCY.

1. It is not necessary that a defendant, who asserts that the contract sued on is a wagering contract, and unenforceable as such, give notice to the other party of his intention to repudiate the contract.

2. On an issue whether a contract for the purchase of 20,000 bushels of wheat was a wagering contract, evidence that the alleged purchaser was not a miller or dealer in grain, and had no use for or means of handling the grain purported to be purchased, that he was an electrical engineer of small means, and that the alleged seller had reason to know that he had no property or means to enable him to meet the purchase price of such an amount of grain, or any reasonable proportion thereof, is admissible.

3. A general statement in a brief that the court erred in sustaining objections to a certain line of testimony, without indicating where the rulings complained of are to be found in the record, or the nature of the evidence offered, the objections made, and the rulings thereon, is not sufficient to call for any examination of the matter by this court.

Commissioners' Opinion. Department No. 3. Error to District Court, Otoe County; Jessen, Judge.

"Not to be officially reported."

Action by Ray C. Merrill against F. R. Garver. Judgment for defendant, and plaintiff brings error. Affirmed.

T. F. Von Dorn, for plaintiff in error. W. H. Pitzer, for defendant in error.

POUND, C. The plaintiff sued upon a promissory note executed by the defendant. The defense is that the note was given in settlement of a wagering contract, in form a contract for the purchase of some 20,000 bushels of wheat, which was in truth and in fact a mere bet or wager upon the price of wheat, without any intention that any grain should actually be purchased or delivered thereunder. Upon trial to the court without a jury, the trial judge found generally for the defendant, and rendered a judgment accordingly, from which error is now prosecuted.

The principal contention of the plaintiff seems to be that the evidence is not sufficient to support the findings and judgment. We are well satisfied, however, that the dealings of the parties were what are commonly known as "board of trade" transactions, and had no reference to any actual grain, further than was necessary to make a convenient show of validity. We do not question that persons may enter into valid contracts for the purposes toward which the contract in controversy purports to be directed. But whether this particular contract comes within the one class or the other is purely a question of fact. The trial judge, who saw and heard the witnesses, has determined this question of fact, and we think we should have come to the same conclusion, under the evidence, ourselves.

It is urged that the defendant "at no time expressly or impliedly gave notice to the Floyd Campbell Company of an intention to repudiate his contracts, but, on the contrary, his decision to do so was subsequent to the execution of his note in settlement of his indebtedness." No such notice was necessary. In such case it is not a question of rescission by the defendant, but of refusal on the part of the court to enforce an illegal transaction. If the contract is valid, no amount of notice of an intention to repudiate it will avail after its consummation. If it is invalid, no

Digitized by Google

amount of assertion of an intention to perform its terms will require the courts to aid in its enforcement.

Error is assigned upon certain rulings of the court permitting the defendant to testify, over objection, that he was not a grain dealer nor miller, and had no use for, or means of handling, 20,000 bushels of wheat; that he was a man of small means; that the agent of the company with whom he dealt had reason to know that he was not able to pay the sum of $14,000, called for by the contract, nor any reasonable proportion thereof; and that the aggregate of his contracts amounted to about 150,000 bushels. We think this testimony was clearly admissible for the purpose of showing the intention of the parties at the time they entered into the alleged contract. The circumstances disclosed by this evidence were such as to make it clear to any reasonable mind that the defendant was simply gambling upon the price of wheat, and was not able to do more than put up the margins required for that purpose. Rogers v. Marriott, 59 Neb. 759, 82 N. W. 21.

Some further complaint is made in the brief with reference to various rulings of the trial court as to admission and rejection of evidence, but they are not made in such manner as to apprise us of the specific grounds of complaint. A general statement in a brief that the court erred in sustaining objections to a certain line of testimony, without stating where the rulings complained of are to be found in the record, or the nature of the evidence offered, the objections made, and the rulings thereon, is not sufficient to call for any examination of the matter by this court. The brief must state specifically what is complained of, the reason and basis of the complaint, and the exact portions of the record material thereto. Hackney v. Raymond Bros. Clarke Co. (Neb.) 94 N. W. 822.

We therefore recommend that the judgment be affirmed.

DUFFIE and KIRKPATRICK, CC., concur.

PER CURIAM. The conclusions reached by the Commissioners are approved, and, it appearing that the adoption of the recommendations made will result in a right decision of the cause, it is ordered that the judgment of the district court be affirmed.

HYATT v. ANDERSON et al.*

(Supreme Court of Nebraska. Sept. 17, 1903.)

GUARDIAN—SALE OF REAL ESTATE.

1. It is not conduct contrary to public policy or fraudulent for a guardian, before applying for a license to sell real estate belonging to his ward, to procure the obligation of an intending purchaser to bid an adequate price at the sale, or, after the confirmation, to advance and account for the amount of the bid, at the instance and on behalf of the purchaser.

(Syllabus by the Court.)

*Rehearing denied November 18, 1903.

Commissioners' Opinion. Department No. 1. Error to District Court, Holt County; Harrington, Judge.

Action by Charles S. Anderson and others against Charles W. Hyatt. Judgment for plaintiffs. Defendant brings error. Affirmed.

M. P. Kinkaid, for plaintiff in error. R. R. Dickson, for defendants in error.

AMES, C. The facts in this case, so far as they do not appear to us to have been established by indubitable evidence, are undisputed, and, so far as they are pertinent to any substantial controversy in the action, are as follows: Charles S. Anderson was the owner of the undivided five-sevenths of a tract of land in Holt county. Of the remaining two-sevenths, one belonged to Anderson's minor daughter, of whom he was guardian, and the other belonged to one Paul Lamereaux, also a minor, under the guardianship of his brother, George Lamereaux. The latter and Anderson were brothers-in-law. Anderson contracted to sell the entire tract to Hyatt, the plaintiff in error, and to procure conveyances to the latter of the interests of the minors for a gross price, of which one-seventh was to be paid on account of the share of each minor. It is not contended that the sum thus stipulated to be paid was inadequate to the value of the land, or that Anderson was to, or did thereafter, receive, or attempt so to do, any benefit or advantage from the transaction, except his aliquot share of the purchase price for his five-sevenths of the tract. Applications were thereafter duly made by the guardians, respectively, to the district court for licenses to sell the estates of their wards, and, licenses having been granted, public sales were advertised, made, reported to the court, and confirmed in all respects as provided by statute; Hyatt appearing in each instance as a purchaser at the price agreed upon, and after the confirmation receiving guardian's deeds for the titles of the minors in the tract in question. Of the prices so agreed upon and bid at the sale, Anderson paid one to the guardian of Paul, and made due report of, and duly accounted for, the other as guardian of his daughter. This suit is, in substance, though not in form, an action to recover from Hyatt the purchase price of these two-sevenths. The plaintiff recovered below, and Hyatt prosecutes error.

The plaintiff in error contends that the transaction was against public policy and void, and that Anderson cannot recover anything because of it for his own benefit, or in his own name, in his individual capacity. The corollary of this proposition, that the minors upon attaining their majority may successfully maintain an action to recover from Hyatt their interests in the land, or the value of it, counsel for the plaintiff in error has not urged, nor do we think he could maintain it if he should do so. Neither could

Digitized by Google

he very well contend that his client is entitled to retain the land without payment therefor to any one. We do not discover anything reprehensible in the transaction. It amounts, as it seems to us, to this: Anderson and George Lamereaux, the guardians, before applying for licenses to sell, procured the obligation of an intending purchaser to bid at the sales sums which were adequate to the value of the titles offered. Nothing was done irregularly or under cover, nor anything to deter the others from bidding, had any desired so to do. Hyatt was the highest and best bidder, and obtained the property to which he became entitled as such. Anderson, after making his report of the sale, was estopped to deny that he had been paid the purchase price in cash for the share of his daughter, and, pursuant to his previous arrangement with Hyatt, he did pay the price of the share to Paul to the guardian of the latter, who was estopped in like manner. We are at a loss to understand for what reason the sales were open to direct impeachment, but, however that may be, they are certainly not open to collateral attack by the purchaser. A very similar case is that of Stuart v. Allen, 16 Cal. 499, 76 Am. Dec. 551, where the principles involved are more fully discussed, and where the same conclusion is reached.

It is recommended that the judgment of the district court be affirmed.

HASTINGS and OLDHAM, CC., concur.

PER CURIAM. For the reasons stated in the foregoing opinion, it is ordered that the judgment of the district court be affirmed.

ARABIAN HORSE CO. v. BIVENS.

(Supreme Court of Nebraska. Sept. 17, 1903.)

EVIDENCE—STRIKING OUT ANSWER—APPEAL—PRESUMPTIONS—COSTS—PAYMENT—CONTRACT.

1. It is not error to strike out an irresponsive answer given on cross-examination, especially when it has no relation to the issues in the case.
2. In a trial to a court, where the finding is based upon sufficient competent proof, it will be presumed that immaterial evidence was disregarded. Dewey v. Allgire, 55 N. W. 276, 40 Am. St. Rep. 468, 37 Neb. 6.
3. The testimony of the witness who paid them is competent proof of a payment of costs.
4. The particular place where witness put an executed contract, after settlement with regard to it, is immaterial, where all the essential facts as to it and its custody are in evidence and undisputed.
5. Finding of the trial court found to be in accordance with the weight of the evidence.
6. Refusal of leave to amend answer after a hearing, and set up mistake in a settlement, an exercise of sound discretion, where the evidence, as a whole, did not show any such mistake.

Commissioners' Opinion. Department No. 1. Error to District Court, Gage County; Letton, Judge.

"Not to be officially reported."

Action by Eva Bivens against the Arabian Horse Company. Judgment for plaintiff, and defendant brings error. Affirmed.

Rinaker & Bibb and L. W. Colby, for plaintiff in error. Hazlett & Jack, for defendant in error.

HASTINGS, C. This is a foreclosure suit brought here by petition in error. Plaintiff below, Eva Bivens, filed a cross-bill to foreclose a mortgage on real estate near Beatrice, given April 20, 1899, to secure the payment of $3,600 and interest at 10 per cent. per annum. She admitted payments on the note to the amount of $555, and claimed $3,705 as still due, with interest at 10 per cent. from February 19, 1901. The note and mortgage were made by John J. Bivens, and she alleged that the property was transferred to the Arabian Horse Company, subject to her lien. The horse company admitted the execution of the note and mortgage; admitted its own incorporation; admitted the recording of the mortgage and its purchase of the property; alleged the same payments which plaintiff admitted; claimed an additional one of $75 on June 20, 1899; denied that Mrs. Bivens was the owner of the note and mortgage and the real party in interest in the action; alleged that the note and mortgage was executed by John J. Bivens, who was a brother of plaintiff's husband, in pursuance of a usurious verbal agreement between the plaintiff and the horse company for the loan of $3,450, and the payment by the company of $75 attorneys' fees and $2.50 revenue stamps for plaintiff; that John J. Bivens had no interest in the mortgaged premises, but held the legal title in trust for the horse company, pursuant to a written agreement between Samuel and Eva Bivens on one part, and L. W. Colby on the other, by which the first party was to convey the premises to Colby when certain payments were made; that this contract had been assigned to the horse company; that there was then due under it the sum of $3,450 only, and this sum and the attorneys' fee of $75 and $2.50 stamps were the sole consideration for the note and mortgage, and that at that time plaintiff and her husband were bound to convey these premises to the horse company on its making a mortgage for $3,450; that by mutual agreement Mrs. Bivens loaned to the horse company the said $3,450 as the consideration for the note and mortgage, and that the additional $150 included in it was usurious interest, and that it was agreed that the company should pay the sum of $75 to plaintiff's attorney, J. A. Smith, and $2.50 for revenue stamps. It was asked that the mortgage and note be found usurious, and that only the unpaid portion of the original principal be found due. Plaintiff denied the $75 payment; realleged her ownership of the note; admitted her relationship to John J. Bivens; alleged that her note and mortgage were given by Bivens to cover the unpaid purchase

Digitized by Google

price of the premises; that its amount was fixed by the amount due under a decree by which she had obtained title through foreclosure; and that there was at the time of the giving of the note and mortgage $4,950 due her. She wholly denied any usurious agreement. The court found for the plaintiff; found that there was no usurious agreement; found no payment of $75; and entered a decree for the amount of her note and mortgage, less the other payments credited according to the trial court's computation made at the time, which seems not to have been excessive.

The sole issue in this case, as made by the pleadings, is the existence of a usurious agreement and the payment of the $75. It is sought to reverse the decree of the court on three grounds: Errors in permitting the introduction of evidence; errors in the court's finding of fact; and the refusal of the defendant's request for leave to amend answer in accordance with the evidence, as claimed, after the conclusion of the hearing and the submission of the case.

The first error complained of is the striking out of the statement of the witness Colby, made on cross-examination, "The payments were sent by draft by me." The question asked by counsel on cross-examination was as to these payments: "When were they made?" The reply was: "I could not tell you exactly, but they were made some time after I got back from military service; the payments were sent by draft by me." Plaintiff's counsel moved to strike out this latter statement, which was done by the court. There was no error in this action. It was not responsive to the question, and counsel was under no obligation to permit it to remain as an answer to his interrogatory. No attempt was made to introduce any evidence of the sending of such drafts in the affirmative proof of the defendant. The only payment in dispute, the $75 to attorney Smith, was not made by draft.

Complaint is also made of the admission of statements that the witness Colby had failed in the performance of his part of the contract for a reconveyance of this land. It must be admitted that such evidence had nothing to do with the question, either as to usurious agreement or as to the payment of the $75; but the case will not be reversed for the admission of immaterial testimony. It was tried to the court, and if the conclusion reached is sustained by sufficient competent proof, the finding should be sustained. Dewey v. Allgire, 37 Neb. 6, 55 N. W. 276, 40 Am. St. Rep. 468.

The same seems to be somewhat true as to the question of whether or not a certain $300 paid by application of the rent of these premises while in the plaintiff's possession was credited in the settlement out of which the mortgage in suit grew. As the whole settlement, however, was under discussion, it would seem that testimony as to the various credits to which the defendant company was entitled, and which it had received in this settlement of plaintiff's contract to reconvey, were properly admitted.

Complaint is also made of the admission of evidence by the plaintiff as to the amount of costs paid on her behalf in the foreclosure action by which she obtained title to these premises. As these costs admittedly went towards making up the consideration of the note and mortgage in suit, a statement by the witness, who paid them for plaintiff, as to the amount paid, seems clearly material and competent. A claim that the record of the taxation of costs is the only competent evidence cannot be admitted. What the witness actually paid, it would seem, he had a right to state, and if the amount of such payment was subsequently, by agreement, included in the mortgage, whether they had been regularly taxed or not would be immaterial.

Complaint is made that the court sustained an objection to the question asked of the witness Colby, the president and manager of the horse company, as to what he did with the contract for reconveyance after the deed to J. J. Bivens and by Bivens to the horse company and the mortgage in suit had been executed. The court sustained an objection to this as immaterial. It appears clearly from the evidence that this contract remained in the possession of the horse company or of its president, Colby, and that the plaintiff had served a notice on him to produce it, which had not been complied with. He testified fully as to the custody of the contract, and where it had been. It also appears clearly from the evidence that it was present with its indorsements at the settlement, and was figured up at the time the mortgage in suit was given. The trial court seems to have been entirely correct in ruling out the answer to this question as immaterial.

It is complained that the findings of the district court as to the two questions in issue—the usury in this contract and the payment of $75—are not supported. We are entirely unable to draw any such conclusion from our examination of the evidence. The contract was made between plaintiff's husband, Samuel Bivens, J. A. Smith, plaintiff's attorney at the time, J. J. Bivens, and L. W. Colby, the president of the company. The only witnesses who testified are plaintiff's husband and the husband's brother on the one side, and General Colby on the other. The brothers testify that the amount due upon the reconveyance contract was in dispute; that their attorney, J. A. Smith, figured it at $3,900; that Samuel Bivens figured it at about $3,800. Mr. Colby himself put it at $3,600, and, after an extended wrangle, Mr. Colby's own figures were taken, and the mortgage drawn for that amount. Mr. Colby says that his own figures at the time then stated were $3,450; that the additional $150 was a bonus for the forbearance; that there were

Digitized by Google

some costs, amounting to about $50, which he was to pay, and that he was to pay J. A. Smith $75, under an agreement made with Smith, of which he supposed the plaintiff's husband was cognizant. This, however, is denied, and there is nothing to show it. The contract which was used at the settlement by the parties, and which bears on its back indorsements of the several payments claimed by Mr. Colby, was produced at the trial. A computation of the amount due upon it, according to its terms, allowing the costs, which defendant was to pay, were $50, instead of $100, as plaintiff claims, shows, under the rule announced in Davis v. Neligh, 7 Neb. 78, and affirmed in Rawlings v. Anheuser-Busch Brewing Ass'n (Neb.) 94 N. W. 1001, a little over $3,600 as due when the note and mortgage in suit were given, allowing the $300 presently to be mentioned.

Complaint is made that among the findings is one that the debt is due from the Arabian Horse Company, and that there is no allegation charging an assumption of the debt by that company, and no proof to show such assumption. This finding is certainly erroneous, in the absence of either pleadings or proof of the assumption of the debt. There is, however, nothing to indicate that it was in any way prejudicial to defendant. The matter would be correctable in case of an application for deficiency judgment, and in the absence of such application would be of no consequence. It is not thought that the finding of this amount as due from the horse company requires a reversal of the decree.

Application was made for leave to amend the answer, and assert that $300 had been included in the mortgage by mistake. Among the payments indorsed on the back of the contract of reconveyance was one of $300, as rental during one year that the property was in plaintiff's possession. At the trial the question was asked the plaintiff's husband, "Was the $300 taken into consideration, and was it included in the $3,600?" His answer was, "No, sir." It appeared elsewhere in his testimony that plaintiff had the possession of this property during the year 1896. It is claimed that the answer indicated a mistake in the amount due at the time of the settlement, and that his mortgage had been made $300 too large by reason of a failure to credit this. We do not think that any such conclusion can be drawn from the answer as a whole, and it is not supported by other facts in the case. The answer indicates as strongly that this $300 was not included in the $3,600 as it does that it was not taken into consideration in the settlement, and the witness' further answers indicate, as does the entire testimony, that there was no real controversy as to the items of credit on this contract, but that there was a dispute over their computation. As above stated, taking all the payments indorsed upon the copy of the contract produced by the defendant, using Julian's interest tables and the rule of this court for computing partial payments, there was a little over $3,600 still due at the time the mortgage and note in suit was made. It is not thought that there was abuse of discretion on the part of the trial court in refusing permission, after a trial had been had on the question of usury, to substitute a claim of mistake, which all the facts in evidence failed to indicate was well founded.

It is recommended that the judgment of the trial court be affirmed.

AMES and OLDHAM, CC., concur.

PER CURIAM. The conclusions reached by the Commissioners are approved, and, it appearing that the adoption of the recommendations made will result in a right decision of the cause, it is ordered that the judgment of the district court be affirmed.

NASH v. WILKINSON.

(Supreme Court of Nebraska. Dec. 18, 1901.)

MORTGAGE FORECLOSURE—SALE—IRREGULARITIES.

1. A sheriff made a sale under a decree of foreclosure, and did not file with his return the affidavit of the publisher showing due publication of the notice of such sale until the day after it actually took place. *Held* not prejudicial to the rights of the mortgagor or owner of the land.

Commissioners' Opinion. Department No. 1. Appeal from District Court, Phelps County; Beall, Judge.

"Not to be officially reported."

Action by Louis C. Nash against William Wilkinson, impleaded with H. E. Bush. Judgment for plaintiff, and Bush appeals. Affirmed.

S. A. Dravo and W. R. Hall, for appellant. John N. Dryden, for appellee.

KIRKPATRICK, C. This is an appeal from an order of the district court of Phelps county confirming a sale of certain lands made by the sheriff on a decree foreclosing a mortgage. Appellant, in the district court, objected to the confirmation of the sale for the reasons that the property was appraised too low, that the appraisers were not free holders, that no notice of the sale was published in a newspaper, as required by law, and that the sheriff did not make his return within 60 days from the time he received the order of sale. These objections were not made until long after the sale was had, and it is very questionable whether they are sufficiently specific to present any question for the consideration of the trial court.

Counsel for appellant admits that none of the objections is well taken, except the one alleging that no notice of the sale was published as required by law. This objection seems to have been based upon the proposition that the publisher, who had sworn to the affidavit showing the publication of the

Digitized by Google

notice, had failed to sign the affidavit, and that the clerk of the district court when he administered the oath had failed to attach his seal. Since the filing of appellee's brief, this court, on motion of appellee, has permitted to be filed, as a part of the record, a corrected copy of the affidavit, which shows that the affidavit was properly signed by the publisher of the paper, and that it was properly sworn to before the clerk, and that the seal of the clerk was attached. There seems to be an entire want of merit in this appeal.

It is further objected that the affidavit of publication was not really filed in the office of the clerk of the district court until the day after the sale was made. This would not tend to prejudice the appellant. There was no error in the order of the district court confirming the sale. It is therefore recommended that the order of the district court confirming the sale be affirmed.

DAY and HASTINGS, CC., concur.

Affirmed.

NATIONAL LIFE INS. CO. v. CRANDALL et al.

(Supreme Court of Nebraska. Jan. 8, 1902.)

MORTGAGE FORECLOSURE—APPRAISAL—APPEAL—REVIEW—ORDER OF SALE.

1. "An appraisement duly made of real estate for the purposes of a judicial sale cannot be successfully attacked solely on the ground that the property has been appraised too low. To make the low valuation a successful ground of attack on the appraisement, it must be challenged for fraud." Brown v. Fitzpatrick, 76 N. W. 456, 56 Neb. 61.

2. Where no part of the record, prior to an alias order of sale on which property is sold, is brought to this court on an appeal from an order of confirmation, no irregularity or lack of authority to issue such alias order can be presumed.

3. A certificate that appraisers were sworn by the sheriff, by a deputy, *held* to sufficiently indicate that the deputy performed such services.

Commissioners' Opinion. Department No. 1. Appeal from District Court, Lancaster County; Frost, Judge.

"Not to be officially reported."

Action by the National Life Insurance Company against Anna C. Crandall and others. Judgment for plaintiff. Defendants appeal. Affirmed.

D. F. Osgood, for appellant. S. L. Geisthardt, for appellees.

HASTINGS, C. In this case, which is an appeal from the confirmation of a foreclosure sale, the first objection is that the appraisement is too low. No objection to the competency of the appraisers, and no allegations of fraud, are made. It seems the settled conclusion of this court that objections to an appraisement solely on the ground that it is too low are not to be entertained. Brown v. Fitzpatrick, 56 Neb. 61, 76 N. W. 456.

The next objection urged is that the alias order of sale under which the property was sold was irregularly issued. As to this there is absolutely nothing in the record to indicate whether or not such is the case, and, of course, the action of the lower court must be presumed regular. None of the proceedings in the case prior to the issuing of the alias order of sale have been brought up, and whether they were regular or irregular cannot be ascertained by so much of the record as we have here.

The objection mainly relied upon seems to be that the return which states that the appraisers were sworn is signed "John J. Trompen, Sheriff, by Nicholas Ress, Deputy." It is claimed that this return indicates that the sheriff himself swore the parties, and that Mr. Ress cannot certify that he did so. We do not so understand the return. It seems to us to mean that the whole transaction was by Mr. Ress, acting as deputy for the sheriff.

It is recommended that the action of the district court be affirmed.

DAY and KIRKPATRICK, CC., concur.

Affirmed.

GORDON v. STEWART et al.

(Supreme Court of Nebraska. Sept. 17, 1903.)

MORTGAGE—SUBROGATION—VOLUNTEER—LIEN.

1. One S. having children, not minors, and an insane wife, at all times residents of England, owned a dwelling house, and lived therein with a woman with whom he had entered into a void marriage contract. After the death of S. his children and true widow claimed the property by descent as having been the homestead of S. That it was his homestead, doubted, but not determined.

2. The property was incumbered by a valid mortgage lien. Plaintiff loaned S. money with which the lien was paid off, and in good faith took a mortgage on the property, executed by S. and the woman with whom he was living as husband and wife.

Held, that plaintiff has a lien on the property for the money loaned and so used, either by virtue of his mortgage, or that by subrogation, he has such lien by virtue of the lien so paid.

Held, further, that plaintiff was not a mere volunteer, and that claimants may not avoid his mortgage and retain the benefit of the release of the prior valid lien.

Commissioners' Opinion. Department No. 2. Appeal from District Court, Lancaster County; Frost, Judge.

"Not to be officially reported."

Suit by Samuel Gordon against Annie M. Stewart and others. Judgment for plaintiff, and defendants appeal. Affirmed.

Mockett & Polk and F. L. Sumpter, for appellants. Fred'k Shepherd and John L. Sundean, for appellee.

GLANVILLE, C. The plaintiff, Samuel Gordon, commenced this action in the dis-

¶ 1. See Mortgages, vol. 35, Cent. Dig. §§ 1503, 1504.

Digitized by Google

trict court of Lancaster county to foreclose a mortgage made by Robert R. Stewart, now deceased, and Annie M. Stewart, defendant, as husband and wife, for the sum of $300, covering property at that time occupied by the mortgagors. The action was commenced against Annie M. Stewart individually and as administratrix, and afterwards the appellants Martha Stewart, Margaret Stewart, and Margaret J. Harm intervened, and P. J. Elmen was substituted as administrator of the estate of Robert R. Stewart, who died intestate while still living on the property. Margaret Stewart is alleged and admitted to have been the wife of the deceased, Robert R. Stewart, and Martha Stewart and Margaret J. Harm are his daughters by the said Margaret Stewart. It appears from the pleadings and evidence that the deceased, Robert R. Stewart, left England in 1881, leaving behind him the above-named daughters and his wife then and ever since insane and incarcerated as insane in an asylum there; that he became a resident of this state soon after, and kept up a correspondence with his daughters for some time; that he acquired the property in question in the city of Lincoln, and incumbered the same with a valid mortgage before he commenced to occupy it in any manner, and afterwards commenced to live on the property with the defendant Annie M. Stewart, as husband and wife, under the guise of a void marriage; that thereafter the plaintiff was induced to lend money with which to pay off the prior mortgage, taking the mortgage in question to secure its repayment; that the money advanced by the plaintiff was actually paid upon the prior lien, and the release thereof received and turned over to the deceased by the plaintiff; that the deceased, Robert R. Stewart, and the defendant Annie M. Stewart, by the recitals of said mortgage, represented themselves to be husband and wife, and that the defendant Annie M. Stewart, as well as plaintiff, believed in the existence of such relation. The district court found for the plaintiff, and entered a decree of foreclosure. The above-named interveners and the administrators seem to have appealed. The brief of appellants is signed by the attorneys only, without showing for whom they appear, but the interveners and administrators seem to have given the supersedeas bond, and we take it the brief is for them.

Appellants contend that, because the deceased lived on the property and was married when the plaintiff's mortgage was made, the mortgage is void under section 4 of our homestead act (Comp. St. 1901, c. 36), and say in their brief: "Appellants make two points: First, the appellee was not entitled to subrogation; secondly, the court erred in adjudging that the premises in controversy were not the homestead of Robert Stewart." The appellee contends that the occupancy of the property by the mortgagors, living together in violation of the law, could not make it the homestead of the deceased mortgagor; that the presumption that the home of the husband is the home of the legal wife is rebutted by the evidence; and that, if it be true that the mortgage given to him is a nullity, he is entitled to the lien of the mortgage his money paid off by subrogation. It goes without saying that a court of equity will scrutinize the record very carefully and minutely, and examine a wide range of the law, before it will admit itself powerless to prevent the inequity attempted by the appellants. The court feels no sympathy for a daughter that will reach out 7,000 miles to shake the plaintiff's lien from this property which his money had relieved from a preexisting valid lien by proving that her father died an unprosecuted felon, so that she may inherit his property free from the lien. If the court cannot reach natural justice without doing violence to the principles of law governing its action, it will adhere to these principles, and say, "The law allows it, and the court awards it;" but we do not think equity will disappoint justice in this case.

There is no room for contention between the plaintiff and the interveners about the fact of the prior marriage because of the admission in the pleadings, and the determination of the case must turn upon the interpretation to be given the statute and the enforcement of the principles of equity applicable to the facts. Some of the provisions of our homestead act are as follows: Section 1 provides for a homestead "consisting of a dwelling house in which the claimant resides." Section 4 reads: "The homestead of a married person cannot be conveyed or incumbered unless the instrument by which it is conveyed or incumbered, is executed and acknowledged by both husband and wife." All the provisions of the statute are entitled to a liberal construction for the purpose of carrying out the intention of the Legislature, and have always been so construed by our court. If, in order to secure its benefits to the persons for whose benefit the law is made, a construction is necessary, and can be reasonably made as a construction of, not an addition to, the statute, that should be adopted and adhered to, even though there be cases wherein such construction might work a hardship, probably never contemplated by the lawmakers. This case is an equity case, before us on appeal, where the appellant is entitled to a "trial de novo," and it becomes our duty to examine both the law and the evidence, and arrive at such conclusion as we find to be right and in accordance with law. But we find the facts are hardly in dispute at all; therefore only the law must be found and applied. In addition to what has been stated as the contention of the parties, there is this question involved in the case: Can the interveners claim the benefits of the release of the prior valid lien on

Digitized by Google

this property, secured by the use of plaintiff's money, procured by the pretense of an apparently valid mortgage, without being estopped to deny the burden attempted to be imposed by the same entire transaction? There are, then, three questions that may require investigation: (1) Was plaintiff's mortgage valid? If it was, the decree is right as it stands. (2) If the plaintiff's mortgage is void, then is he entitled to be subrogated to the benefits of the lien his money paid off, or, if it be not strictly a right of subrogation, will he be given an interest in the property, on the principle of equity upon which resulting trusts are established, to the extent of the betterment of the estate produced by the use of his money procured from him by a false pretense of a mortgage apparently, and by him believed to be, good, though in fact void? If he shall be found to have this right, we will then inquire whether the decree may stand, or whether we are required to reverse and remand the case to fix the amount of such interest. (3) Have the interveners estopped themselves to question the validity of plaintiff's lien by insisting on retaining the benefits of the release and opposing subrogation, thus electing to hold the benefit of the transaction, knowing the benefit was obtained by an attempt to fasten the burden of the new mortgage on the estate. If they have, the decree should stand as made.

Taking up the last of these questions, it seems to us they may be so estopped by their election. Of course, it would never do to allow the homestead of a married person to be incumbered or conveyed by estoppel, to the evasion of the statute. But when the owner died, assuming for the purposes of this argument that this property was his homestead, it passed, under section 17 of the homestead act, to the interveners, free from any necessity of continued occupancy or any restraints upon its alienation, and they are in a position, with reference to their interest in the property, to now create an equitable estoppel of the character suggested. They could mortgage or convey it in the same manner as other lands, and nothing of its homestead character, after descent cast under section 17, remains, except its exemption from pre-existing debts. See Cooley v. Jansen, 54 Neb. 33, 74 N. W. 391; Nebr. L. & T. Co. v. Smassall, 38 Neb. 516, 57 N. W. 167. In Hall v. Hooper, 47 Neb. 111, 66 N. W. 33, it is held: "Where A. purchased land, and caused it to be conveyed to his wife, he giving at the time of the conveyance a mortgage in his own name upon the land to secure a portion of the purchase money, the wife, by accepting the deed, adopted also the mortgage upon the land." In that case the heirs of the wife were contesting the validity of the mortgage as an incumbrance of their mother's estate in the land. While this holding in the case cited was based upon the fact that the husband was acting as the agent of the wife in the transaction, it seems to us the underlying equitable principle is the same in the case before us. In this case the husband procured the release, and the betterment of the estate interveners are claiming by assuming the power to create a new lien thereon. Can interveners insist on holding this benefit without thereby consenting that in equity the burden which secured the benefit shall be sustained? In Clark v. Saline County, 9 Neb. 516, 4 N. W. 246, this court quoted from Pimental v. City of San Francisco, 21 Cal. 362, this language, with approval: "The legal liability springs from the moral duty to make restitution. And we do not appreciate the morality which denies in such cases any rights to the individual whose money or other property has been thus appropriated. The law countenances no such wretched ethics. Its command always is to do justice."

Upon the question of plaintiff's right to subrogation, or right to trace his money into the estate, there is much in reason and authority to sustain his position. His money was obtained for the ostensible purpose of paying off a valid lien, and was so applied. It was obtained on a contract to give him a new valid lien on the property for his debt. An apparently valid lien was offered. If it was void, the facts making it void were known by the mortgagor, through whom the interveners claim title by descent. Had the void character of the mortgage been discovered while the money was in the control of the mortgagor, it could have been recovered as a trust fund. If it had been expended to enlarge the estate by purchasing an additional lot, equity would establish a trust thereon in plaintiff's favor, because it had been obtained by fraud, or paid upon a mistake of fact; and because instead it was paid to better the estate by removing a valid lien, he surely must be protected to the extent of giving him a lien or interest in the estate as it stands, or else by reviving the old lien for his use by subrogation.

In Hill on Trustees, 144, it is said: "Whenever the circumstances of a transaction are such that the person who takes the legal estate in property cannot also enjoy the beneficial interest without necessarily violating some established principle of equity, the court will immediately raise a constructive trust, and fasten it upon the conscience of the legal owner, so as to convert him into a trustee for the parties who, in equity, are entitled to the beneficial enjoyment."

In Bohn Sash & Door Co. v. Case, 42 Neb. 281, 60 N. W. 576, the question of the right of a mortgagee to be subrogated to the rights of the holders of prior mortgages paid by the consideration of his mortgage is discussed at some length, and, while the court held in that case that the right of subrogation was not shown, yet the discussion of the question is instructive. The trial court in that case had allowed subrogation as against the holders of several mechanics' liens on the ground

Digitized by Google

that the evidence showed that the holders of these liens were virtually chargeable with fraud in conjunction with the mortgagor to deceive the mortgagee, and to induce him to believe in the nonexistence of their liens prior to the time of their being filed. The evidence in this regard was examined, and held not to justify such finding, and therefore subrogation against the appellants was denied by the court. It will be noticed that these parties who resisted the right of subrogation were parties who did not claim under the mortgagor by title, or interest thereafter acquired, and were not, therefore, in privity with the mortgagor as to his right, title, and interest in the property as held by him at the time the mortgage was made. In the case before us the interveners can stand in no better plight than the deceased, Robert R. Stewart, as their claim of title is through him by inheritance. The following language is quoted from the opinion: "What was regarded as the pivotal inquiry in that case (Blodgett v. Hitt, 29 Wis. 169) is indicated by the following language quoted from the opinion: 'But the question is not alone, what is the natural and inherent justice of the case? but is, are the principles and rules of equity jurisprudence, as recognized and enforced by courts of equity, sufficiently broad and comprehensive to reach the case, and compel the heirs to repay the sums which the defendant has thus paid for their benefit, before they will be permitted to take possession of the land in controversy?' It will be noted in this language that the conclusion reached could not have been attained alone on the consideration of what is the natural and inherent justice of the case, but it was required that there should concur with this some well-recognized principle of equity jurisprudence which would compel the heirs to repay the sums which the defendant had paid out for their benefit. The consensus of all the cases cited to sustain the subrogation in favor of Jefferies & Sons is that there must exist the equitable principle just noted. In some instances this equitable principle forbids that heirs shall profit by invalid administrators' sales made under misapprehension, causing such invalidity. So, where money has been advanced by way of loan or otherwise because of misconception of the condition of the title, it has been held that there should exist the right of subrogation to the mortgage or other security released by payment of the money advanced. Of this class was Betts v. Sims, 35 Neb. 840, 53 N. W. 1005, 37 Am. St. Rep. 470. In all the cases, however, it is noticeable that there exists a sufficient basis for equitable relief. In some it is because of mistake—a well-recognized equitable ground for the interference of courts, irrespective of whether there is involved the right of subrogation or some other right. In another class of cases there exists the right of subrogation because of the intent with which loans have been made for the payment of prior mortgages. Of the class just mentioned, the case of Emmert v. Thompson (Minn.) 52 N. W. 31, 32 Am. St. Rep. 566, is an example. Because in this case there is concisely stated the conditions necessary to entitle to subrogation of the nature just mentioned, the following language is quoted: 'The better opinion now is that one who loans his money upon real estate security for the express purpose of taking up and discharging liens for incumbrances on the same property has thus paid the debt at the instance, request, and solicitation of the debtor, expecting and believing in good faith that his security will of record be substituted in fact in place of that which he discharges, is neither a volunteer, stranger, nor intermeddler; nor is the debt, lien, or incumbrance regarded as extinguished if justice requires that it should be kept alive for the benefit of the person advancing the money who thereby becomes the creditor.' "

The case of Betts v. Sims, cited in the foregoing opinion, was where Betts and wife were attempting to quiet title to their homestead against the defendant, who claimed through a deed to the premises, void because made only by the husband. While holding under such deed, the defendant mortgaged the premises, and with the proceeds paid off valid mortgages existing at the date of the deed; and it was held that the defendant should be subrogated to the rights of the several mortgagees, and that he was entitled to a decree of foreclosure in the action brought to quiet plaintiff's title.

Ayres v. Probasco, 14 Kan. 175, was where the homestead was selected from the property of the wife, foreclosure proceedings had been had, and to save the property by satisfying the decree a new loan was made, but the mortgage attempted to be given to secure the same was found to be void. It is held in the syllabus: "And the mortgage being void as to the wife, and being on property owned by her and occupied by herself and husband as a homestead, the mortgage is also void as to both husband and wife." It was also held in that case that a party who receives an involuntary benefit is not estopped from denying the validity or legality of a pretended instrument made as security for the money resulting in such benefit. It was found in this case that the money received on the void mortgage was paid in discharge of the decree already rendered, and the case was remanded to ascertain the amount so expended; the court, by Valentine, J., holding: "It would seem that, where one person advances money with the consent of the owner of a homestead to extinguish some existing lien upon such homestead, with the understanding of the parties that the person so advancing such money shall acquire a lien upon such homestead, such person will in equity acquire such lien to the extent of the money so advanced and so used to ex-

Digitized by Google

tinguish such first-mentioned lien, notwithstanding the instrument claimed to create or to evidence such lien in favor of the party so advancing the money may be void."

Levy v. Martin, 48 Wis. 198, 4 N. W. 35, was where the plaintiff had taken a mortgage from the executor of the deceased owner of the mortgaged premises, believing that the mortgage would be valid because of proceedings had in the probate court. Such proceedings were, however, found to be invalid. The money was borrowed for the purpose of paying certain valid mortgage and tax liens upon the mortgaged property, and was so applied. The prayer of plaintiff's petition is in part as follows: "That he may be subrogated to all the rights of Martin under said $600 mortgage; that the satisfaction of said mortgage may be canceled, and the mortgage declared a continuing lien upon the premises." In the pleadings it was alleged on one side and denied upon the other that the executor had promised to secure an assignment of the pre-existing mortgage. It is said in the opinion: "The really important question in the case is whether the plaintiff, upon the undisputed facts, is equitably entitled to a prior lien to the extent he would be if, as assignee, he were foreclosing the $600 M. mortgage." And again: "But, independent of any agreement upon the subject, it is insisted that the plaintiff has an equitable right to have his mortgage declared a prior lien; and we think this claim must be sustained to the extent of the amount due on the $600 mortgage and the taxes paid out of the money advanced to the executors by the plaintiff. The grounds for that relief rest upon principles of natural justice and equity, which are amply vindicated in the decisions above cited, especially in the exhaustive opinion of Mr. Justice Lyon in Blodgett v. Hitt. The plaintiff loaned his money to the executors to pay off the $600 mortgage and taxes, which were incumbrances upon the property, and confessedly liens prior in right and superior in equity to any lien that Martin acquired under his mortgages of 1873–74. The $600 mortgage was given by the testator and wife to Martin in 1869, was past due, and Martin wanted his money. The plaintiff loaned his money at the solicitation of the executors, to take it up and relieve the estate. It is true the plaintiff took from the executors at the time the $800 mortgage in suit, relying upon the validity of the license of the probate court of Racine county authorizing and directing the executors to execute that mortgage for the purpose of procuring this loan. But it is conceded that this license is defective, and does not bind the heirs; consequently the security upon which the plaintiff relied has practically failed. Still his money has been applied to the discharge of just debts against the estate, and he has the prior right to be reimbursed out of the estate to the extent of the incumbrances which he has removed. It is objected that in furnishing the money to discharge these incumbrances he was a mere volunteer, in whose behalf there can be no subrogation. But the plaintiff loaned his money at the request of the executors, relying upon the validity of the mortgage which they had been ordered by the probate court to execute, and is not to be treated as a volunteer in the legal sense of that term. The case of Blodgett v. Hitt is decisive upon that point. See, also, Payne v. Hathaway, 3 Vt. 212." The court held "that plaintiff, as security for his advances, is entitled to be subrogated to M.'s rights as mortgagee under such mortgage; and this not only against the heirs, but also as against M.'s subsequent mortgages."

The case of Jones v. Parker, 51 Wis. 218, 8 N. W. 124, was a case where a mortgagee released a valid existing mortgage on the premises involved, taking a new mortgage for the debt, and it appears that the new mortgage was void as to the homestead estate and dower right of the wife, although the prior mortgage was valid as against such rights, and it was held "that equity will treat said substituted mortgage as continuing to the plaintiff the rights he had under the original mortgage as to homestead and dower."

In Home Savings Bank v. Bierstadt, 168 Ill. 618, 48 N. E. 161, 61 Am. St. Rep. 146, it is said by Phillips, C. J.: "Subrogation, as a principle of equity jurisprudence, is generally confined to the relation of principal and surety and guarantors, or to a case where a person is compelled to remove a superior title to that held by him in order to protect his own, and also to cases of insurers. The general principle of subrogation is confined and limited to these classes of cases. Bishop v. O'Conner, 69 Ill. 431; Borders v. Hodges, 154 Ill. 498, 39 N. E. 597. Whilst these general heads include the doctrine and principles of subrogation, that doctrine has been steadily expanding and growing in importance and extent in its application to various subjects and classes of persons. This equitable principle is enforced solely for the accomplishment of substantial justice, where one has an equity to invoke which can not injure an innocent person. The right of subrogation which springs from the mere fact of the payment of a debt, and which is included under the heads first above stated, is what is termed 'legal subrogation,' and exists only where included within those classes. But, in addition to this principle of legal subrogation, there exists another principle, which is termed 'conventional subrogation,' which results from an equitable right springing from an express agreement with the debtor, by which one advances money to pay a claim for the security of which there exists a lien, by which agreement he is to have an equal lien to that paid off, whereupon he is entitled to the benefit of the security which he has satisfied with the expectation of receiving an

Digitized by Google

equal lien. Coe v. New Jersey, etc., Ry. Co., 31 N. J. Eq. 105; Tyrrell v. Ward, 102 Ill. 29; Tradesmen's, etc., Ass'n v. Thompson, 32 N. J. Eq. 133."

Wilton v. Mayberry, 75 Wis. 191, 43 N. W. 901, 6 L. R. A. 61, 17 Am. St. Rep. 193, is a case where the plaintiff, as the court found, "in mere friendship, without any selfish interest whatever," loaned money with which to pay off a valid existing mortgage on the premises, and which was actually so paid, and the mortgage discharged of record, under an agreement that the mortgagors and owners of the property would execute to him a new mortgage for the amount so advanced. Plaintiff in confidence paid the money, and caused the prior mortgage to be released, whereupon the owners, instead of giving such new mortgage, deeded the land, with intent to defraud the plaintiff, to the defendant John R. Matberry, who had full knowledge of the loan and the agreement under which it was made. The plaintiff brought his action, setting up the facts, and praying to be subrogated in place of the mortgagee of the prior valid mortgage. The defendants demurred generally, and stood upon the demurrer. It was contended that the petition showed that the plaintiff was a mere volunteer, and had no interest in the land to protect, and could not be subrogated as prayed. The court, distinguishing the case from cases where subrogation is sought merely because the money borrowed was paid in extinguishing a lien without any understanding or agreement or expectation that the creditor should have an equal lien on the property, held that the plaintiff was not a volunteer, and was entitled to subrogation as prayed.

The following recent decisions all sustain the right of subrogation under circumstances which render them, on principle, authority in the present case, and several of them are directly in point: Texas L. & L. Co. v. Blalock, 76 Tex. 85, 13 S. W. 12; Southern B. & L. Ass'n v. Page, 46 W. Va. 302, 33 S. E. 336; Faulk v. Calloway, 123 Ala. 325, 26 South. 504; Markillie v. Allen, 120 Mich. 360, 79 N. W. 568; Backer v. Pyne, 130 Ind. 288, 30 N. E. 21, 30 Am. St. Rep. 231; Stevens v. King, 84 Me. 291, 24 Atl. 850; Johnson v. Tootle, 14 Utah, 482, 47 Pac. 1033; Straman v. Rechtine, 58 Ohio St. 433, 54 N. E. 44; M. & M. Bank v. Tillman, 106 Ga. 55, 31 S. E. 794; Frisbee v. Frisbee, 86 Me. 444, 29 Atl. 1115; Emmert v. Thompson, 49 Minn. 386, 52 N. W. 31, 32 Am. St. Rep. 566; Draper v. Ashley, 104 Mich. 527, 62 N. W. 707; Union Mort., B. & T. Co. v. Peters, 72 Miss. 1058, 18 South. 497, 30 L. R. A. 829; Dorrah v. Hill, 73 Miss. 787, 19 South. 961, 32 L. R. A. 631; and Fowler v. Maus, 141 Ind. 47, 40 N. E. 56. There are many cases where subrogation has been denied, among them Bible v. Wisecarver (Tenn. Ch. App.) 50 S. W. 670; Brown v. Rouse, 125 Cal. 645, 58 Pac. 267; Carolina I. B. & L. Ass'n v. Black, 119 N. C. 323, 25 S. E. 975, and Rice v. Winters, 45 Neb. 517, 63 N. W. 830; but most of them are where the unfortunate condition of the party seeking subrogation is due to negligence or mistake of law, and we have not discovered any case where the equities are so strong as in the one before us where the right has been denied. The case of Rice v. Winters, supra, was where a mortgagee whose money went to pay a first lien on the mortgaged premises while there existed a second mortgage lien, supposed by the plaintiff to have been released, when in fact the record showed no valid release, sought subrogation. The second mortgagee was a holder for value, and this court declined to cut him out of his right to hold his first lien upon the premises, and refused to subrogate the plaintiff to the benefits of the mortgage paid off. In the case before us the interveners are not holders for value. They claim under the deceased mortgagor, whose fraud, willful or constructive, whose false pretense, willful or unwitting, but nevertheless false, deceived the plaintiff into parting with his money; and they stand in no better light than he would if alive and making this fight for himself. One of the cases cited by Ragan, C., is Ætna Life Ins. Co. v. Middleport, 124 U. S. 534, 8 Sup. Ct. 625, 31 L. Ed. 537, as sustaining the propositions: "(1) That the person seeking its benefit must have paid a debt due to a third party before he can be subrogated to that party's rights; and (2) that in doing this he must not act as a mere volunteer, but on compulsion, to save himself from loss by reason of a superior lien or claim on the part of the person to whom he pays the debt—as in cases of sureties, prior mortgages, etc. The right is never accorded in equity to one who is a mere volunteer in paying a debt of one person to another." That case was where the plaintiff had purchased void bonds issued by the city of Middleport, and claimed the benefits of subrogation to the rights of the holders of a debt due from the city, supposed to have been paid by the bonds. The plaintiff bought the bonds as they stood in the market as a matter of speculation or investment merely. It had no dealings with the city, had paid no money to the city, and had paid no debt of the city. The parties to whom the city owed the debt were still the owners of the claim, and the plaintiff was held not entitled to subrogation. We think the case is not in point, and is not in conflict with the cases herein cited, holding that a person standing in the position of the plaintiff, Gordon, is not a mere volunteer. The case of Watson v. Wilcox, 39 Wis. 643, 20 Am. Rep. 63, also cited by Ragan, C., is distinguished by the Wisconsin cases herein cited. The courts of Michigan long since the case of Kitchell v. Mudgett, 37 Mich. 81, cited, have adopted the principle of subrogation urged in favor of the plaintiff, and the case of Fort Dodge B. & L. Ass'n v. Scott (Iowa) 53 N. W. 283, is quoted from on page 532, as follows: "It is well understood that the

Digitized by Google

plaintiff was to accept a new mortgage, and plaintiff got all he bargained for. There was no mistake, except that the plaintiff failed to exercise the diligence required in the examination of the records, and therefore failed to discover the existence of the judgment and sale thereunder. No one can be blamed, but he must suffer loss, simply because he was negligent. There is no principle that will allow him to take advantage of that to the injury of the diligence." And this court announced the law in the third paragraph of the syllabus as follows: "The doctrine of subrogation is not administered by courts of equity as a legal right, but the principle is applied to subserve the ends of justice, and to do equity in the particular case under consideration. It does not rest on contract, and no general rule can be laid down which will afford a test in all cases for its application. Whether the doctrine is applicable to any particular case depends upon the peculiar facts and circumstances of such case. South Omaha Nat. Bank v. Wright, 45 Neb. 23, 63 N. W. 126, followed." The case followed granted the claim of subrogation.

We are of the opinion that "the peculiar facts and circumstances of this case" are such as to render the equitable doctrine of subrogation applicable, and that this holding is not in conflict with any prior holding of this court.

In view of our holding on the question of subrogation, it may not be necessary to decide whether or not the plaintiff's mortgage is void as a mortgage upon the homestead of a married person, for the plaintiff is only interested in his lien, and whether he gets it by his mortgage, or by subrogation, or tracing a trust fund, it is all the same to him. A decision of the homestead question involved herein would not be res adjudicata as to creditors of the estate of Robert Stewart, for the administrator cannot represent or bind them by being a party to this case, and therein insisting that the property involved is a homestead, which, if true, entirely destroys his interest therein. It may well be doubted if the living together of the mortgagors in the relation existing between them, with no member of any family joining in the occupancy, and no residence on the property by the deceased at any time when the illegal conditions did not obtain, can make the property "the dwelling house in which the claimant resides," within the meaning of the statute. Lane v. Philips, 69 Tex. 241, 6 S. W. 610, 5 Am. St. Rep. 41, was where a man and woman were living upon the property as husband and wife, but in fact were not such, and in the opinion we find the following language: "It is very clear that a family, such as is contemplated by the Constitution and laws exempting the homestead from forced sale, cannot be made up with constituents consisting only of a man and woman living together as were the appellant and the woman with whom he was living. * * * To constitute a family, within the meaning of the law giving the homestead exemption, the persons who dwell together must not, in the fact of so doing, be violators of the law of the land." A similar holding is found in Bell v. Keach, 80 Ky. 44. In the Texas Case the claimant was allowed his homestead because of minor children recognized as his, though in fact illegitimate. Whitlock v. Gasson, 35 Neb. 829, 53 N. W. 980, was where the husband of an insane wife remaining in the state of Illinois lived with his children on the land in question. This was held to create a homestead, and that the mortgage made by the husband alone was void. If the property involved in this action became the homestead of the deceased, Stewart, as claimant, because of the facts existing in relation thereto, then the plaintiff's mortgage is void, otherwise it is good; but in either case he has a lien that equity will enforce. We think, moreover, that the evidence and pleadings sufficiently establish that the whole of the money loaned by plaintiff was applied to the payment of the former mortgage, and, as no contention is made that the amount awarded by the decree is wrong, that his lien is for the full amount represented thereby, and that the decree of the district court should stand as entered.

We therefore recommend that the judgment of the district court be affirmed.

ALBERT and BARNES, CC., concur.

PER CURIAM. The conclusions reached by the Commissioners are approved, and, it appearing that the adoption of the recommendations made will result in a right decision of the cause, it is ordered that the judgment of the district court be affirmed.

PARDEE v. NELSON et al.

(Supreme Court of Nebraska. Oct. 1, 1901.)

APPEAL—REVIEW.

1. The findings of fact of a court or jury upon conflicting evidence will not be reviewed upon error or appeal.

Commissioners' Opinion. Department No. 3. Appeal from District Court, Gage County; Letton, Judge.

"Not to be officially reported."

Action by Edward T. Pardee against Lind Nelson and others. Judgment for defendants, and plaintiff appeals. Affirmed.

Hazlett & Jack, for appellant. Griggs, Rinaker & Bibb and A. D. McCandless, for appellees.

AMES, C. This is an appeal from a decree of the district court for Gage county in an action in equity. The parties agree that no question of law is involved. If the facts were such as they were found to be by the district court, the judgment should be affirmed. If they were materially different, a

Digitized by Google

different result might follow. The appellant, as is usual in such cases, contends that as to certain important matters the evidence in his favor is undisputed. In this contention we are, however, unable to concur. The evidence is to a large extent circumstantial, and is contradictory to a considerable degree of the testimony of the witnesses in behalf of the appellant upon which he relies for a reversal. It was the province of the trial court to weigh these circumstances as well as the more direct statements of appellant's witnesses, and his findings thereupon are equally as conclusive as though the conflict had arisen upon direct oral testimony. The rule in such case is too well established in this court to require repetition.

It is recommended that the judgment of the district court be affirmed.

DUFFIE and ALBERT, CC., concur.

Affirmed.

SULLIVAN, J., absent, not voting.

HAGERMAN v. THOMAS et al.

(Supreme Court of Nebraska. July 10, 1901.)

ACTION BY RECEIVER—PLEADING—EVIDENCE.

1. One suing as receiver should state in his petition sufficient facts relating to his appointment that the court may know, or presume, at least, that his appointment was legally made.
2. Where the answer denies the representative character of the plaintiff who sues as receiver, he must show by his proof that he was duly appointed receiver, and that he has qualified as such.

Commissioners' Opinion. Department No. 3. Appeal from District Court, Frontier County; Norris, Judge.

"Not to be officially reported."

Action by Frank Hagerman, receiver, against James S. Thomas and others. Judgment for plaintiff, and defendants appeal. Reversed.

E. A. Cook, for appellants. Pulsifer & Alexander and A. B. Coffroth, for appellee.

DUFFIE, C. Frank Hagerman, the plaintiff and appellee, commenced this action, as receiver of the Lombard Investment Company, to foreclose a mortgage on certain lands in Frontier county, executed by the defendants to James L. Lombard, and by him assigned to the Lombard Investment Company. The only allegation in the petition relating to the representative capacity of the appellee is the following: "That said plaintiff, Frank Hagerman, as receiver, etc., is the sole duly appointed, qualified, and acting receiver of the Lombard Investment Company, a corporation, and as such is duly authorized and empowered to bring and prosecute this action." The defendants in their answer set up, among other things, the following defense: "They deny that the plaintiff is the receiver of the Lombard Investment Company, and they expressly deny that the plaintiff has legal capacity to maintain this action in this court."

In an action by a receiver, the general rule of pleading undoubtedly requires him to set out in his petition the authority under which he assumes to act. Sufficient facts concerning the appointment should be alleged to show that it has actually been made the receiver, and the facts so alleged should be set out in such form that issue may be joined thereon. White v. Low, 7 Barb. 204; Beach on Receivers, § 693; High on Receivers, §§ 232, 233.

It will be noticed that the court making the appointment is not mentioned, and there is therefore no way by which this court can determine from the pleading itself whether the appointing court was one of competent jurisdiction for that purpose. In order to enable the appellee to sue in his representative capacity as receiver, he must show that he was appointed by a court of competent jurisdiction, that he had qualified under such appointment, and entered upon the duties of his office. Under the authority of Stewart v. Beebe, 28 Barb. 34, and Rockwell v. Merwin, 45 N. Y. 166, the petition would be sufficient had it set forth the court under whose authority the plaintiff was acting. The defect in the petition was one which went to the legal capacity of the plaintiff to sue. If his appointment did not come from a court of competent jurisdiction, he had no authority to act, or to sue as receiver of the Lombard Investment Company. The want of legal capacity to sue, if it appears on the face of the petition, must be taken advantage of by demurrer pointing out the defect complained of. A general demurrer to the petition will not raise the question. Code Civ. Proc. § 94; Sanborn v. Hale, 12 Neb. 318, 11 N. W. 302. The objection that the petition shows upon its face that the plaintiff has no legal capacity to sue must be taken advantage of by demurrer, or it will be waived. Porter v. Bank, 36 Neb. 271, 54 N. W. 424; Beeler v. Bank, 34 Neb. 348, 51 N. W. 857. The defendants, by failing to demur to the petition, undoubtedly waived any defect therein on the ground above mentioned, and cannot urge it in this court.

Accepting the petition as sufficient in its statements to show the legal capacity of the plaintiff to sue, the question then arises whether the proof offered was sufficient to entitle him to a decree. The bill of exceptions shows a mortgage made by the defendants to James L. Lombard, of date January 18, 1892, and an assignment of said mortgage by Lombard to the Lombard Investment Company, of date April 19, 1892. On September 18, 1893, the Circuit Court of the United States for the Western Division of the Western District of Missouri, in an action then pending in said court, appointed five persons

¶ 1. See Receivers, vol. 42, Cent. Dig. § 361.

Digitized by Google

to act as receivers for the Lombard Investment Company of Kansas and the Lombard Investment Company of Missouri, the plaintiff herein being one of such receivers. At a later date the same parties were, by an order duly made by the Circuit Court of the United States for the District of Nebraska, appointed auxiliary receivers of said corporations, and of the property thereof situated in the state of Nebraska. In the order of appointment is found the following: "The said receivers in the said original proceeding, having been directed to give a good and sufficient bond conditioned to perform all things which they may be directed to perform by any other court by which in an ancillary proceeding they may be appointed ancillary receivers, it is now ordered that in lieu of any new bond as ancillary receivers that a certified copy of the bond given in the original proceedings be filed herein within thirty days from this date, or within such further time as the court may, on application made therefor, allow for that purpose, which shall have the same force and effect as if an independent bond by the ancillary receivers should be filed." At some time, presumably at a later date, the following order was entered in the case: "The court having received the resignation of Milton G. Whitney, Charles O. Fairchild, Harry E. Mooney, and Sanford B. Ladd as receivers, the same are hereby accepted, and said receivers are hereby discharged, and the court upon its own motion doth order that Frank Hagerman be continued as sole receiver, with all the rights, duties, and powers heretofore devolved upon the receivers by virtue of former order herein." When this last order was made, there is nothing before us to show. The certificate of the clerk attached to the copy appearing in the bill of exceptions is dated July 21, 1896, and this action was commenced in April, 1897. We do not think we ought to presume that a bond was given under this last order, as was done in Hegewisch v. Silver, 140 N. Y. 414, 35 N. E. 658, as the appellants' answer contains a denial of the allegation of the petition that the plaintiff is the receiver of the Lombard Investment Company. This case differs from the New York case in the fact that the receiver in that case had obtained an order from the court appointing him, allowing him to bring that particular action. In the case at bar, the order appointing the receivers gave them a general authority to commence all actions necessary for the preservation of the estate. If the appellee had produced an order from the federal court authorizing him to commence this action, it might well be presumed that he had duly qualified, otherwise no order of the kind would be granted. The appellee in his brief insists that the order continuing Hagerman as sole receiver contains the following provision: "And it further appearing that the said Frank Hagerman, as sole receiver, has filed a good and sufficient bond in said original cause, it is ordered that he file no further bond herein." This may be true, but there is no evidence in the record that such is the fact. We have set out above all that appears in the record before us relating to the appointment of Hagerman as sole receiver, and the presumption must obtain that the extract, if it be an extract, from the order of the court, contains all that was material to the appellee's case.

The answer of the defendants admits the making of the mortgage, and it appears to be a valid and subsisting claim against them. We therefore recommend that the decree of the district court be reversed, and the case remanded with directions to the district court to allow the plaintiff to introduce further evidence, showing, if he can, that he is the duly qualified receiver of the Lombard Investment Company.

ALBERT and AMES, CC., concur.

Reversed and remanded.

DOUGHTY v. HUBBELL et al.

(Supreme Court of Nebraska. Oct. 1, 1901.)

MORTGAGE FORECLOSURE—APPRAISAL—NOTICE.

1. Evidence examined, and *held* sufficient to sustain the finding of the district court on an objection to the confirmation of a sale based on the ground that the appraisement was too low.
2. That the appraisement was conducted by the deputy sheriff is not a valid objection to the confirmation of a sale of real estate.
3. In the appraisement of real estate, in foreclosure proceedings, notice of such appraisement, or of the time thereof, to the parties is not required.

Commissioners' Opinion. Department No. 3. Appeal from District Court, Buffalo County; Sullivan, Judge.

"Not to be officially reported."

Action by Alethia S. Doughty against Royal J. Hubbell and others. Judgment for plaintiff, and defendant Hubbell appeals. Affirmed.

S. M. Nevins, for appellant. F. G. Hamer, for appellees.

ALBERT, C. This is an appeal from an order of the district court confirming a sale of real estate. Three objections are relied upon for a reversal, and we will notice them in the order presented.

1. The appraisement was too low. The property was appraised at $10,000. The valuation placed upon it by the witnesses who testified on the hearing of the objections ranges from $9,600 to $17,500. In the face of such testimony, it is clear that the finding of the district court on that point cannot be disturbed.

2. The appraisement was conducted by the deputy sheriff. There is no merit in this objection. It is fully disposed of in Scottish A. M. Co. v. Nye, 58 Neb. 661, 79 N. W. 553.

Digitized by Google

3. The third objection is that the defendants had no notice of the time of the appraisement. Counsel urge this point with much plausibility, but, whatever merit may inhere in their theory, this court is thoroughly committed to the contrary doctrine, and one which, we beg to say, meets our entire approval. Eastern Banking Co. v. Seeley, 59 Neb. 676, 81 N. W. 852; Tillson v. Benschoter, 55 Neb. 443, 75 N. W. 1101; Mills v. Hamer, 55 Neb. 445, 75 N. W. 1105; Hoover v. Hale, 56 Neb. 67, 76 N. W. 457.

We recommend that the order of the district court be affirmed.

AMES and DUFFIE, CC., concur.

Affirmed.

SULLIVAN, J., absent, not voting.

PHŒNIX INS. CO. v. BOEHL et al.

(Supreme Court of Nebraska. Jan. 8, 1902.)

EQUITY—DISMISSAL OF BILL—MORTGAGE FORECLOSURE—SETTING ASIDE.

1. Where a bill discloses nothing of equity, and still less of conscience, a judgment of the lower court dismissing such bill will be affirmed.

2. Evidence examined, and *held* sufficient to sustain the judgment of the district court.

Commissioners' Opinion. Department No. 2. Error to District Court, Harlan County; Beall, Judge.

"Not to be officially reported."

Action by the Phœnix Insurance Company against Carl Boehl and others. Judgment for defendants, and plaintiff brings error. Affirmed.

George W. Wright, for plaintiff in error. J. G. Thompson and R. L. Keester, for defendants in error.

OLDHAM, C. This was a suit in equity to set aside an order of confirmation of sale in a mortgage foreclosure proceeding entered by the district court of Harlan county, Neb., on the 20th day of May, 1896. The petition is quite lengthy, and, if it contains anything at all that would entitle plaintiff to equitable relief, it arises from the allegation of fraud and imposition charged to have been practiced upon the court by defendants Claypool and Cramer in procuring the order sought to be set aside. There is nothing in the petition that clearly discloses the manner in which plaintiff was injured by the order which it seeks to have set aside. The defendants Cramer and Claypool answered this petition, denying that the order of confirmation was procured by fraud or misrepresentation, but alleged that it was made by the agreement of all the parties, in the presence of the court, in accordance with a contract entered into between plaintiff and defendants, and no exception was taken to the order when made by plaintiff's attorney, who was then present.

The testimony introduced at the hearing shows clearly and unmistakably that the order complained of was entered into in open court by the agreement of counsel of plaintiff and both defendants, and that it was made in conformity to an agreement entered into by the plaintiff and the defendant Claypool, who was the owner of the equity of redemption of all the mortgaged premises, except one lot which was owned by the defendant Cramer. The evidence showed that under this agreement the sale was to be confirmed on all the mortgaged property except lot one (1), and that lot 1 was to be released in consideration of $500 which was paid by defendant Cramer to the plaintiff for such release, and that, after confirmation, the plaintiff was to quitclaim the premises, with the exception of lot 1, to defendant Claypool, in consideration of his paying the full amount of plaintiff's claim, including all interest and costs of suit. The evidence shows clearly that, after the confirmation was entered, this agreement was carried out, and plaintiff quitclaimed the land, with the exception of lot 1, to defendant Claypool, and received in consideration therefor the full amount of their claim, with interest and costs.

The court found the issues for the defendants, and dismissed plaintiff's petition, and plaintiff brings error to this court. As we view it, this record discloses little of equity and still less of conscience in this proceeding, and we therefore recommend that the judgment of the district court be affirmed.

POUND and SEDGWICK, CC., concur.

Affirmed.

SOLACK et al. v. GANS.

(Supreme Court of Nebraska. Jan. 8, 1902.)

ERROR—WHEN LIES—JUDGMENT FOR COSTS.

1. A mere judgment for costs is not a final judgment, and proceedings in error will not lie to reverse such judgment.

Commissioners' Opinion. Department No. 3. Error to District Court, Douglas County; Baker, Judge.

"Not to be officially reported."

Action by Jacob Solack and others against Barbara Gans. Judgment for defendant, and plaintiffs bring error. Dismissed.

Arthur E. Baldwin and John H. Grossman, for plaintiffs in error. Covell & Winter, for defendant in error.

ALBERT, C. This case is here on error. The judgment complained of was rendered in an action brought on an appeal bond, and is a judgment for costs only. It has been repeatedly held by this court that a judgment for costs is not a final judgment, and that proceedings in error will not lie there-

¶ 1. See Appeal and Error, vol. 2, Cent. Dig. § 481.

Digitized by Google

from. A want of jurisdiction would render an examination of the questions raised fruitless.

We recommend that the petition in error be dismissed.

AMES and DUFFIE, CC., concur.

Petition in error dismissed.

GREEN v. DOERWALD et al.

(Supreme Court of Nebraska. Sept. 17, 1903.)

FORECLOSURE—APPRAISEMENT—CONFIRMATION OF SALE—REVIEW.

1. An appraisement of real estate for the purposes of a judicial sale cannot be successfully assailed on the ground that the appraisers were mistaken in their valuation of the property. Nelson v. Alling, 79 N. W. 162, 58 Neb. 607.

2. Where, on an appeal from an order of confirmation of sale of real estate made in pursuance of a decree in foreclosure proceedings, certain sections of the Code of Civil Procedure, providing for the appraisal of real property sold under judicial proceedings, are challenged as unconstitutional, and it appears that the determination of the questions can avail the appellants nothing, the validity of the sections thus challenged will neither be investigated nor determined.

(Syllabus by the Court.)

Appeal from District Court, Douglas County; Estelle, Judge.

Suit by Walter J. Green against Augusta Doerwald and others. Judgment for defendants, and plaintiff appeals. Affirmed.

Chas. H. Von Mansfelde, for appellant. Louis Berka, for appellees.

HOLCOMB, J. From a final order of confirmation of a sale of real estate, made in pursuance of a decree in foreclosure proceedings, the owners of the equity of redemption appeal. Appellants complain that the court erred in overruling their objections to the order of confirmation on the ground that the property was appraised too low, and greatly disproportionate to its real value. To support the objections thus interposed, appellants filed affidavits of a general character of four different parties, placing the value of the real estate sold at from $5,000 to $5,500, while the appraised value as made by the sheriff and two freeholders called for that purpose was estimated to be $3,000. There is no charge of fraud in making the appraisement, nor does it appear from the record that the difference in valuation is the result of other than an honest mistake of judgment. All that can be said against the appraisement as made by the sheriff and those assisting is that they were mistaken as to the true value of the real estate appraised for sale. This of itself is not sufficient to require the vacation of the appraisement made. Cole v. Willard et al., 62 Neb. 839, 88 N. W. 134, and authorities cited. The mistake of the appraisers, conceding one to have been made, is not a glaring one, and it may well be doubted whether the appraisement as made by the officers called and sworn for that purpose and discharging quasi judicial functions does not carry more weight than the very general affidavits filed in support of the objections to the appraisement. The trial court having approved the sale as being fair and equitable, it having authority, in the exercise of its equitable powers, to set the appraisement aside and direct a new one if the appraisement appeared manifestly inadequate and disproportionate to the true value of the land, notwithstanding it was sold for more than two-thirds of the appraised value, and not having done so, we are not prepared to say its action in confirming the sale was erroneous. Williams v. Taylor, 63 Neb. 717, 89 N. W. 261.

Our attention is also challenged to the alleged unconstitutionality of the act of 1875 providing for "the more equitable appraisement of real property under judicial sale." Sess. Laws 1875, p. 60. It is argued the amendatory act contains two subjects, one of which only is expressed in the title, and that it violates the provisions of section 11, art. 3, of the Constitution, to the effect "that no bill shall contain more than one subject and the same shall be clearly expressed in the title." We do not think we are called upon in this case to investigate and pass upon the question thus presented, even though it might be found upon investigation that the act is vulnerable to the objections presented. It is to be noted that the act referred to amended and repealed sections 492 and 493 of the Code of Civil Procedure as then existing. The appraisal complained of was made without the formality of ascertaining and deducting prior liens, the plaintiff in the action having waived this formality, as he rightfully may do. Ballou v. Sherwood, 58 Neb. 20, 78 N. W. 383. The land was appraised at a gross sum, and sold for more than two-thirds of its gross appraised value. It can avail appellants nothing whether the act be valid or invalid, for the land was appraised and sold according to the provisions of the statute, whether we consider the old law as still being in force or whether we regard it as superseded by the act alleged to be unconstitutional. In neither view of the case have the appellants any legal grounds of complaint, as the appraisement and sale is valid, and in conformity with both the old statute and the one superseding it, and for that reason we excuse ourselves from, in this case, entering into a discussion or determination of the alleged unconstitutionality of the latter act.

The judgment of the district court should be, and therefore is, affirmed.

¶ 1. See Mortgages, vol. 35, Cent. Dig. § 1503.

Digitized by Google

NEWBRO et al. v. UNDELAND.

(Supreme Court of Nebraska. Sept. 17, 1903.)

TRADE-MARK—INJUNCTION—FRAUD.

1. If the manufacturer of a compound or preparation according to a secret formula is himself guilty of false or misleading representations in any material respect in connection therewith, or if his trade-mark label, or advertisements contain distinct false assertions, which operate to deceive the public as to its nature, composition, or origin, he has no standing in a court of equity, and a suit to enjoin misuse of his trade-mark, trade-name, or label is not maintainable.

2. But mere statements of opinion as to its curative properties, or as to the cause of a disease, concerning which there is a conflict of expert opinion, are not false representations, within the meaning of the rule, even though somewhat sweeping, or even extravagant.

(Syllabus by the Court.)

Commissioners' Opinion. Department No. 3. Appeal from District Court, Douglas County; Read, Judge.

Suit by Dupont M. Newbro and others against Andrew L. Undeland. Judgment for plaintiffs, and defendant appeals. Affirmed.

Baldrige & De Bord, for appellant. Weaver & Giller, for appellees.

POUND, C. This is a suit to enjoin the defendant, who is engaged in the business of selling barber's supplies at wholesale, from adulterating a compound or preparation manufactured and sold by plaintiffs under the name of "Newbro's Herpicide," or "Herpicide"; from using the label, trade-mark, or bottles of the plaintiffs in the manufacture or sale of the adulterated compound; and from using the trade-mark of the plaintiffs in compounding mixtures or preparations to be put on the market by the defendant. The facts are stated clearly and concisely in the special findings of the trial court. The court found that the Newbro Drug Company, being the owner of the trade-name "Newbro's Herpicide" and of the trade-name "Herpicide," as applied to a liquid application for the hair, and also of a secret formula used in compounding such preparation, sold and transferred said formula to the plaintiffs, and also sold and transferred to them the trade-name "Newbro's Herpicide," and the trade-name "Herpicide," which names had been in use by plaintiffs and their assignor for more than two years prior to the bringing of suit; that the plaintiffs are the sole and exclusive owners of said trade-names "Newbro's Herpicide" and "Herpicide," and are entitled to the sole and exclusive use of said trade-names as applied to a liquid application for the hair; that said names are well known in business, have been extensively advertised, and large quantities of said preparation sold thereunder, and that said names are of considerable pecuniary value to the plaintiffs; that the defendant is engaged in the business of selling barbers' supplies, and for some months prior to the commencement of this suit, through his clerks and employés, has made, prepared, and compounded a preparation similar in appearance to said Newbro's Herpicide, and sold the same in original bottles of the plaintiffs, which had contained the original compound manufactured by the plaintiffs, with original printed "Herpicide" labels thereon, and also with labels thereon containing the word "Herpicide," which were intended to deceive the trade and the public in general; that the defendant, having compounded and prepared a preparation resembling plaintiff's herpicide in appearance, but which was not genuine herpicide, had for some months prior to the bringing of suit sold and placed upon the market for sale, under the label and trade-name of the plaintiffs, said spurious compound and preparation, for the purpose of deceiving the public, and leading them to believe that they were purchasing the preparation of the plaintiffs, which the plaintiffs had prepared and sold under the name of "Newbro's Herpicide" and "Herpicide." The court further found that the representations made by the plaintiffs on their labels and advertisements were not false or fraudulent, and, in particular, that the statements upon such labels and advertisements that dandruff was caused by microbes or parasites, and that the said preparation would cure baldness, and the address thereon, "Newbro Drug Co., 68 West Broadway, N. Y.," were not false or fraudulent, and were not intended to deceive. Decree was thereupon entered for the plaintiffs, substantially as prayed, from which the present appeal is taken.

The principal contention of the appellant is that the plaintiffs are entitled to no relief by reason of certain statements upon their printed labels and in their advertisements, which appellant claims are false and misleading, and have the effect of deceiving the public. The principle governing such cases is well stated in the recent case of Worden v. California Fig Syrup Co., 187 U. S. 516, 23 Sup. Ct. 161, 47 L. Ed. 282, in which the authorities are collated and discussed. In that case Mr. Justice Shiras puts the rule thus: "When the owner of a trade-mark applies for an injunction to restrain the defendant from injuring his property by making false representations to the public, it is essential that the plaintiff should not, in his trade-mark or in his advertisements and business, be himself guilty of any false or misleading representations; that, if the plaintiff makes any material false statement in connection with the property which he seeks to protect, he loses his right to claim the assistance of a court of equity; that where any symbol or label claimed as a trade-mark is so constructed or worded as to make or contain a distinct assertion which is false, no property can be claimed on it, or, in other words, the right to the exclusive use of it cannot be maintained." The statements upon plaintiffs' label to which appellant particularly calls attention are that

Digitized by Google

plaintiffs' preparation is "the only remedy known that positively stops the hair falling out," that it is "a new scientific discovery," and that it "cures dandruff, baldness, and all diseases of the scalp by destroying the microbes or parasites to which all diseases of the scalp are due." The defendant challenges also the address upon the label, "Newbro Drug Co., 68 West Broadway, N. Y." It will be observed that the only statements of facts in this label are the address, and possibly the claims that plaintiffs' preparation destroys microbes and parasites to which diseases of the scalp are due, and that such diseases are caused by microbes or parasites. As to the address, it appears that the plaintiffs had an office in New York at the place named, but that their factory and principal place of business was at Butte, Mont. The label does not purport to say where the preparation is manufactured, or that its ingredients come from any particular place, or that any special virtue results from manufacture or preparation in one place rather than another. The address is obviously intended merely to notify the public where the manufacturers and proprietors may be reached, and the choice of a great business center for an office for this purpose is natural, and in no way calculated to deceive. There is a considerable amount of expert evidence in the record with reference to the causes of dandruff and baldness. The most that can be said with reference to this evidence is that it shows a conflict of opinion among experts upon the subject. It appears that some eminent authorities hold that dandruff is the result of a germ or parasite, and that statements to this effect are to be found in reputable, if not authoritative, text-books. So long as the question is an open one, we fail to perceive wherein there is any fraud in the plaintiffs' advertising that they cure diseases of the scalp by killing the germ or parasite by which such diseases are produced. It appears in evidence beyond contradiction that some of the principal ingredients of plaintiffs' preparation are germicides, and have the effect of killing microbes and parasites, such as, according to the plaintiffs' claim, cause the diseases in question. Those who believe that such diseases are caused by parasites will not be deceived by the plaintiffs' statements. Those who do not so believe, seeing that plaintiffs claim only to kill the germs or microbes, and do not pretend to cure the diseases in any other manner, are certainly in no danger of deception. In view of the expert evidence, there appears no reason to think that plaintiffs' claims in this respect are dishonest or fraudulent. The statements that the preparation is a "new scientific discovery," that it cures "all diseases of the scalp," and that it is the only known remedy "that positively stops the hair falling out," are clearly mere statements of opinion. They are possibly somewhat sweeping, or even extravagant. But they do not transcend the ordinary limits of what is usually considered fair advertising; and in a time when not merely superlatives, but the utmost resources of vocabulary, are scarcely able to meet the demands of everyday advertisements, are clearly innocuous. In Samuel Brothers & Co. v. Hostetter Co., 118 Fed. 257, 260, 55 C. C. A. 111, the court say: "It is argued that no one preparation can possibly be a remedy for the numerous and divers ills for which the label declares this preparation to be adapted, and that the evidence for the appellant shows that a preparation containing so large a percentage of alcohol is contraindicated for many of those ailments. The court will not attempt a minute investigation of this field of inquiry. It is one upon which the experts differ. * * * The argument that it is a quack medicine, and that it is injurious to the human system, and is contraindicated for some of the ailments which it purports to cure, comes with ill grace from those who imitate it as closely as they may without possessing a complete knowledge of its formula, and by unfair trade sell the simulated article as and for the genuine." The evidence shows that the defendant has been engaged in adulterating the plaintiffs' preparation, in using the bottles which had formerly contained such preparation, with their original labels, for the purpose of selling a preparation of his own, and in selling the adulterated preparation and a different compound, which he himself prepared, to persons who applied to him for the plaintiffs' herpicide. We think the decree of the district court is right, and should be affirmed.

It is therefore recommended that the decree be affirmed.

DUFFIE and KIRKPATRICK, CC., concur.

PER CURIAM. For the reasons stated in the foregoing opinion, the judgment of the district court is affirmed.

MOMRICH v. SCHWARTZ.

(Supreme Court of Nebraska. Sept. 17, 1903.)

CHATTEL MORTGAGE—FORECLOSURE — INJUNCTION—LEASE—LIEN ON CROPS.

1. "Notwithstanding the parties to a chattel mortgage have stipulated therein for the foreclosure and sale of the mortgaged property by advertisement in the manner authorized by statute, a court of equity has jurisdiction to entertain an action thereon, and adjudicate the respective rights of the parties in such action. The statutory method of foreclosure is not exclusive." Meeker v. Waldron (Neb.) 87 N. W. 539.

2. Where an injunction is necessary to a successful foreclosure of a chattel mortgage, it is error to refuse one.

3. In foreclosing a lien granted upon crops by the terms of a lease, it is competent for a

¶ 1. See Chattel Mortgages, vol. 8, Cent. Dig. §§ 527, 553, 554.

Digitized by Google

court of equity to refuse to retain more of the crops than are necessary to discharge the amount due.

Commissioners' Opinion. Department No. 1. Appeal from District Court, Cuming County; Graves, Judge.

"Not to be officially reported."

Suit by Gerhard Momrich against Johann Schwartz. Judgment for defendant, and plaintiff appeals. Modified.

Courtright & Sidner, for appellant. T. M. Franse, for appellee.

HASTINGS, C. Two questions are presented in this appeal: First. Had the plaintiff a right to an injunction as an adjunct to foreclosure of the chattel mortgage set out in the first cause of action? Second. Had he a right to a lien upon the entire crop raised upon the leased premises in the year 1902, and also to have it all held for the satisfaction of that lien?

July 24, 1902, plaintiff commenced an action in the district court of Cuming county to foreclose a chattel mortgage to secure $615, due February 1, 1902, upon all the crops grown for the season 1902 on the east half of 28—22—5, Cuming county, Neb. He alleged default in the payment of the amount due; no suit at law; and a sale and disposition, without the knowledge or consent of plaintiff, by defendant, of a large portion of the property mortgaged, and that he was threatening to sell the remainder of the crop, and convert the proceeds to his own use; and that plaintiff was without adequate remedy at law in the premises. He asked an injunction against the sale of any more of the crop, and a finding of the amount due and a foreclosure. For a second cause of action he alleged a leasing of the land for the year 1903 to the same defendant for the same sum of $615, due February 1, 1903, and that the lease contained an agreement to mortgage the crop as security upon demand; that he had demanded compliance with this agreement, and the chattel mortgage had been refused; that defendant was insolvent, and plaintiff had no adequate remedy at law, and defendant was about to sell and dispose of the crop. Copy of the mortgage and lease was attached to the pleadings. A temporary injunction was allowed by the county judge upon the giving of an undertaking in the sum of $500, which was given. The defendant answered, admitting the allegations except as to his insolvency and his sale of the crops without the consent of the mortgagee. He claimed to own property to the amount of $3,455 over all incumbrances; that he had fed part of the corn crop of 1901 to cattle with the plaintiff's consent; and that plaintiff had a complete and adequate remedy at law. As to the second cause of action, he admitted the leasing of the premises, and the giving of the note and entering into the contract; that he was farming the crop; that he was entirely solvent; and that plaintiff had an adequate remedy at law. A motion was made to vacate the temporary injunction, upon which the district judge vacated the injunction as to the crop of 1901 on the ground that plaintiff had an adequate remedy at law, and modified the injunction as to the crop of 1902 so as to permit the defendant to use necessary feed for his stock. At the trial the court, as above indicated, entered a decree foreclosing the chattel mortgage on the remainder of the crop of 1901, but found that the injunction was improper, and should stand dissolved; found an equitable lien upon the crop of 1902 and as to 100 acres of corn and wheat, and as to this continued the injunction, but as to the rest of the crop of 1902 the injunction was dissolved.

As above stated, plaintiff appeals, and complains of so much of the decree as released the remainder of the crop of 1902, the discharge of the injunction against the selling of what was left of the crop of 1901. An examination of the evidence does not show that anything was lost to the plaintiff by reason of the court's refusal to hold the remainder of the crop of 1902. If the court retained enough of this crop to discharge plaintiff's lien, we are totally unable to see how equity could require anything more.

The other complaint—of the discharge of the injunction as to the crop of 1901, and the dismissal of that portion of the plaintiff's action, and the finding that plaintiff was not entitled to any injunction in the foreclosure of his chattel mortgage—we think cannot be sustained. In Meeker v. Waldron (Neb.) 87 N. W. 539, it is held that the fact that a sale of mortgaged property by advertisement is stipulated for does not deprive a court of equity of jurisdiction to foreclose the mortgage. It is clear, therefore, that the fact that a replevin suit to obtain possession was available to the plaintiff did not oust equity of its jurisdiction to aid plaintiff in enforcing his mortgage was called for under the evidence in this case. The property was mortgaged in the form of a growing crop. A sale in the open market would divest the plaintiff's lien, and the defendant was selling it, and in fact continued to sell it after the injunction was dissolved. Only a small portion of the property covered by the mortgage remained when the decree was entered. If, as the Waldron Case holds, and the weight of authority indicates, plaintiff had a right to abandon the stipulated sale and foreclose in equity, he plainly had a right to an injunction to render that foreclosure effectual.

It is recommended that so much of the finding and decree as denied the plaintiff a right to an injunction against the sale of the mortgaged crop of 1901 be reversed and set aside, and the remainder of the decree affirmed.

AMES and OLDHAM, CC., concur.

PER CURIAM. The conclusions reached by the Commissioners are approved, and, it

Digitized by Google

appearing that the adoption of the recommendations made will result in a right decision of the cause, it is ordered that so much of the finding and decree of the district court as denied the plaintiff a right to an injunction against the sale of the mortgaged crop of 1901 be reversed and set aside, and the remainder of the decree be affirmed.

FAY v. CHICAGO, B. & Q. R. CO.

(Supreme Court of Nebraska. Sept. 17, 1903.)

INJURY TO EMPLOYÉ—CONTRIBUTORY NEGLIGENCE—DIRECTING VERDICT.

1. Upon the evidence disclosed by this record the action of the district court in directing a verdict for the defendant is approved.

Commissioners' Opinion. Department No. 1. Error to District Court, Sheridan County; Kinkaid, Judge.

"Not to be officially reported."

Action by Martha E. Fay against the Chicago, Burlington & Quincy Railroad Company. Judgment for defendant, and plaintiff brings error. Affirmed.

C. Patterson and M. F. Harrington, for plaintiff in error. N. K. Griggs, for defendant in error.

AMES, C. Michael R. Fay was an experienced car repairer employed by the defendant railroad company at a gravel pit. Over and across one of the tracks of the company was a structure called a "trap," being a sort of raised platform upon which the gravel was carried, and through a hole or trap in which the latter was precipitated upon cars successively standing and being loaded underneath. The general direction of the track was north and south. It extended northward from the trap about 450 feet upon a grade inclining southwards at about 1 per cent. At the time of the accident hereafter mentioned there were three loaded and three empty cars, all coupled together and standing upon this incline, where they had shortly before been placed by the defendant's train men. The three farthest from the trap were loaded, and the remaining three were empty, and so placed for the purpose of being loaded. The six cars were in immediate contact with each other. The empty car farthest south was in need of some repair, and Fay had marked upon its side the words "Bad order"; but it is not shown that any of the other servants of the company knew of this fact, and we think it is immaterial. It is not shown that the arrangement of the cars was unusual, or that Fay was ignorant of it. On the contrary, it is shown that the methods employed were such as were usual and customary, and that Fay, who was a man of experience and good intelligence, must, from his long service in the capacity of repairer, have been familiar with them. On the north end of the third car northward from the trap was an employé of the company named Caffery. He was called a "spotter." It was his duty to loosen the brakes upon the empty cars and uncouple them so as to move them forward to successive positions under the trap for loading. While he was in this position, Fay told him that the brakes on the car nearest the trap needed to be fixed, and went under the car presumably for the purpose of repairing them. Shortly afterwards he came out from under the car, saying to Caffrey, "All right," as indicating that the repairs had been accomplished. Caffrey then set the brake upon the loaded car immediately north of that upon which he was standing, loosed the brake upon the latter, and moved the three "empties" toward the trap, and finally reset the last-mentioned brake, and, stepping upon the next car south, uncoupled it from that which he had just left, and allowed it to separate from the other and to move forward with the southernmost car some two feet further. About a minute afterwards, or from 5 to 10 minutes after Fay had said "All right," the three loaded cars, impelled by their own weight, moved down the track, and, coming in contact with the "empties," moved them forward several feet. Fay was at once found under the southernmost car, where he had suffered injuries resulting shortly afterwards in his death. During the time these events were occurring there were two other cars under the trap, and Shultz, another "spotter," was engaged in "pinching" or moving them gradually forward by means of an iron bar; but no one saw the deceased after he came from under the car as above mentioned, until he was found under it at the time of the casualty. The action is in behalf of the widow and next of kin. At the close of the trial the court instructed a verdict for the defendant, and the plaintiff prosecutes error.

It was shown without contradiction that the customs and rules of the defendant company regulating the conduct of brakemen of freight cars at stations and sidings are not applicable to gravel pits, and that the deceased knew that on a previous occasion a car standing upon this incline had moved forward from its own weight, and came into violent contact with other cars in front of it, causing injuries to the latter, which he had repaired. It was also shown without dispute that it was the duty of the deceased, before going under a car standing on the track for the purpose of repairing it, to notify the "spotters" of his intention so to do, and to set the brakes, or to see to it that they were set, upon the car next above that which he was about to go under, and that he was provided with blocks to put under the wheels of the car to prevent its moving and with a flag to affix to the car to indicate that he was in a place of danger. It is also uncontradicted that he observed none of these precautions, but that, on the contrary, he notified Caffery, in effect, that he had completed the repair of the car in question, and that no further precaution with respect to it was called for. The dangers to which he

Digitized by Google

was subject were obvious, and were to an important degree increased by his own lack of ordinary care and prudence. It is true, as counsel for the plaintiff urges, that the putting up of a flag or notification to Caffery would not have prevented the violent movement of the car as a result of the collision; but the setting of the brake on the adjacent car, and the blocking of the wheels, had these things been done, would have had a tendency so to do, and, had Caffery been notified, he might, perhaps, have used greater care, or have warned the deceased against so rash an act as going under the car in its then dangerous position. It is difficult, if not impossible, to point with precision to the primary cause of the accident. As Fay must have known, it was customary and necessary, when leaving the cars in place upon the incline, to set but one brake on every second car so as to facilitate the putting of them in motion by means of their own gravity. That is, every alternate car depended by its couplings from the car next above it, which was held in place by a single brake doing service for both. That the cars so situated were in a state of very unstable equilibrium, extremely likely to be overthrown by any comparatively slight shock or disturbance, such as was incident to the detaching of cars from the train, must have been glaringly obvious to every one. It was equally apparent that the going under a car and repairing it anywhere on this incline was an exceedingly hazardous occupation. When Caffery had been told that the car was "all right," he was justified in supposing that the track was, and would remain, free from intrusion by the deceased, at least until he should be notified to the contrary. If, as plaintiff contends, he afterwards took less pains than he might have done to set the brakes firmly on the four cars left at the northern end of the track, still such conduct does not convict him of negligence with respect to the life or person of the deceased, for he might reasonably have felt assured, had the subject entered his mind, that the worst consequence of a collision such as occurred would be injury to the property of the defendant. In view of all these circumstances no greater care was demanded of any other servant of the company than was required of the deceased himself, and it is evident that, if his second and undiscovered presence under the car had caused an injury to Caffery, there would have been at least as valid a reason for holding the company liable on account of the negligence of the former as there is now for a like holding because of that of the latter. We are much inclined to the opinion that the deceased and Caffery were fellow servants within the meaning of the rule which relieves an employer from liability to one, caused by the negligence of the other; but we have purposely refrained from deciding or discussing the question because the contributory negligence of the deceased seems to us sufficient for the disposition of the case. It seems to us that no other inference than that his negligence was contributory to, if not the proximate cause of, his injury, can be drawn from the undisputed facts in the case, and we recommend that the judgment of the district court be affirmed.

HASTINGS and OLDHAM, CC., concur.

PER CURIAM. The conclusions reached by the Commissioners are approved, and, it appearing that the adoption of the recommendations made will result in a right decision of the cause, it is ordered that the judgment of the district court be affirmed.

JESSEN v. DONAHUE.

(Supreme Court of Nebraska. Sept. 17, 1903.)

BASTARDY—EVIDENCE—WITHDRAWING ISSUE —INSTRUCTIONS.

1. Evidence examined, and *held* sufficient to sustain the verdict.
2. Where a material fact is conclusively established by the evidence, it is not error to omit or refuse to submit such fact to the jury.
3. It is not error for the trial court on its own motion to recall the jury, and give additional instructions, after they have retired for deliberation.
4. Instructions examined, and *held* not erroneous.

Commissioners' Opinion. Department No. 2. Error to District Court, Buffalo County; Sullivan, Judge.

"Not to be officially reported."

Action by Carrie Donahue against Johann H. Jessen. Judgment for plaintiff, and defendant brings error. Affirmed.

E. A. Cook and G. W. Fox, for plaintiff in error. H. M. Sinclair, for defendant in error.

ALBERT, C. This is a proceeding in bastardy, wherein Johann H. Jessen is charged with the paternity of an illegitimate child. A trial in the district court resulted in a verdict of guilty, and a judgment for the support of the child. The defendant brings error.

The main contention of the defendant is that the verdict is not sustained by sufficient evidence. It would serve no useful purpose to set out the testimony. As usual in cases of this kind, there is no direct testimony, save that given by the respective parties. The testimony of the complainant is clear and positive that the defendant is the father of the child; that of the defendant is equally clear and positive that he is not. The testimony of each is corroborated by that of other witnesses. There are also facts and circumstances shown in evidence which tend to discredit the testimony given by the respective parties. This is a civil proceeding, and a bare preponderance of the evidence is sufficient to sustain a verdict of guilty. Altschuler v. Algaza, 16 Neb. 631, 21 N. W. 401;

Digitized by Google

Olson v. Peterson, 33 Neb. 358, 50 N. W. 155; Strickler v. Grass, 32 Neb. 811, 49 N. W. 804; Dukehart v. Coughman, 36 Neb. 412, 54 N. W. 680; Robb v. Hewitt, 39 Neb. 217, 58 N. W. 88; Davison v. Cruse, 47 Neb. 829, 66 N. W. 823. The evidence is of such a character that reasonable minds might draw exactly opposite inferences from it. It is well known that under such circumstances a verdict which is only required to be supported by a preponderance of the evidence will not be disturbed.

It is next contended that the court erred in omitting to charge the jury that the burden was upon the plaintiff to show that she was a resident of the county where the action was brought at the time of filing her complaint. This contention, in view of the record, cannot be sustained. The evidence is clear and uncontradicted that the complainant was an actual resident of the county where the complaint was filed. The term "resident" or "residence," as applied to the complainant, is not used in the sense in which it is employed in the Civil Code, but applies as well to the county in which the mother of the child may actually reside, and which is liable to be charged with its support, although she may, in effect, have a home in another county or state. While the proceedings may be brought in the county where the mother has a legal settlement, it may also be brought and prosecuted to judgment in the county of her actual residence. Clark v. Carey, 41 Neb. 780, 60 N. W. 78.

The court gave the following, as part of its charge to the jury: "In considering and determining what weight or effect you will give the testimony of each witness, you should take into consideration what interest or want of interest the witness had in the result of the suit, his or her demeanor upon the stand, the apparent intelligence or want of intelligence of the witness, the opportunity or want of opportunity of the witnesses for knowing the facts concerning which they testify, the probability or improbability of the facts related by the witnesses, and their apparent candor and fairness, or want of such, where witnesses directly contradict each other. You should consider all the testimony in the case, and, after considering it all, and the surrounding circumstances appearing on the trial, determine which of the witnesses are the most worthy of credit, and give credit accordingly." One objection urged against the foregoing instruction is the use of the word "effect" in connection with the word "weight." The defendant insists that the words do not mean the same thing, and that, used together, they had a tendency to confuse the jury. We are unable to concur in that view. The two words, as used in the instruction, mean precisely the same thing, and either of them expresses the idea the learned judge sought to convey to the jury. The use of both to convey the same idea was, no doubt, to make the meaning more clear, and the language of the instruction more forcible.

Another objection urged against this instruction is based on the clause, "where witnesses directly contradict each other." The defendant contends that by the use of such clause the jury were liable to infer that the instruction applied only to testimony of such witnesses whose testimony was contradicted. We do not think it probable that the jury drew any such inference; but, assuming that they did, and that the court intended that they should, it does not follow that the instruction is erroneous. The matters which the court instructed that the jury should take into account in weighing the testimony are matters which they undoubtedly should take into account where the testimony is that of witnesses who contradict each other. Consequently, it would not be improper for them to take such matters into account in weighing testimony which has been contradicted by other witnesses. Hence the instruction, even if limited in its application as the defendant contends the jury may have limited it, was not improper. The most that can be said is that the court should have given another instruction applicable to the testimony not covered by the instruction given. But as no complaint is made of such omission, and as no such instruction was tendered, the omission to give it is not available as error.

Another objection to this instruction is based on the closing paragraph. The defendant insists that in the use of the words, "and the surrounding circumstances appearing on the trial," the court erred, because it did not limit the jury to the consideration of such matters as were directly connected with the testimony offered on the trial. We do not think this objection is well founded. The phrase, "circumstances appearing on the trial" is the equivalent of "circumstances shown on the trial," and we do not think that a jury of ordinary intelligence, after having been instructed that the complainant was required to establish her charge by a preponderance of the evidence, were at all likely to have inferred that they were at liberty to take into account matters not shown in evidence.

After the jury had retired to deliberate on their verdict, the court, on its own motion, recalled them, and gave the following instruction: "You now have been deliberating upon your verdict for more than 29 hours. Now, where a jury finds a difficulty in agreeing, and the various jurors entertain different ideas concerning the evidence or the inferences and conclusions to be drawn therefrom, it is the duty of each juror to patiently listen to and consider the argument of his fellow jurors, with an honest desire to ascertain the truth of the matters concerning which you disagree. No juror should contend for his original ideas or conclusions concerning matters of disagreement after he has become convinced that his position first taken was

Digitized by Google

wrong. No juror should hold out through a spirit of stubbornness. Neither should a juror permit the friendship or admiration, the ill feeling or prejudice, he may entertain for any counsel connected with the case, to influence him. Considerable time has been consumed in the trial of this case. It is not probable that further evidence can be furnished another jury in the trial of the case if you are finally discharged because you cannot agree and the case is again tried. You are probably in as favorable position to decide the case as another jury can be. I want you to realize that it is your work and your duty to decide this case, and to decide it correctly. I hope you will, on retiring to your room, do so, each with the honest conscientious desire to agree and to return a verdict which is justified by the evidence and the law, and which will meet the approbation of your own conscience." In regard to the foregoing instruction, the defendant first contends that the court had no authority to instruct the jury after they had retired, except upon the request of the jury, as provided by section 287, Code Civ. Proc. Such is not the rule. This court has held that the recalling of the jury for further instructions is so far within the discretion of the trial court as not, of itself, to present a subject for review. McClary v. Stull, 44 Neb. 175, 62 N. W. 501. Thompson, in his work on Trials, at section 2363, says that it is the privilege of the presiding judge to recall the jury and give them additional instructions, until, in his opinion, he has fully possessed their minds of the law of the case.

Another objection urged against the last instruction is that it had a tendency to cause some of the jurors to abandon their personal opinions and convictions, and to force a verdict. We do not think the instruction is open to that objection. It is a well-known fact that, after a prolonged controversy, pride of opinion is apt to blind the eyes to the truth. The instruction under consideration was well calculated to impress upon the jury that they were not to be influenced by such pride, and to direct their attention to their real duties. A similar instruction was upheld in Com. v. Tuey, 8 Cush. (Mass.) 1. In Allen v. Woodson, 50 Ga. 53, an instruction that the case had been troublesome, had cost much time and trouble to investigate, and that, therefore, there should be a verdict, was held proper. See, also, Pierce v. Rehfuss, 35 Mich. 53; State v. Rollins, 77 Me. 380; Thompson on Trials, § 2302.

We discover no error in the record, and recommend that the judgment of the district court be affirmed.

BARNES and GLANVILLE, CC., concur.

PER CURIAM. The conclusions reached by the Commissioners are approved, and, it appearing that the adoption of the recommendations made will result in a right decision of the cause, it is ordered that the judgment of the district court be affirmed.

BEST v. GROLAPP et al.

(Supreme Court of Nebraska. Sept. 17, 1903.)

SPECIFIC PERFORMANCE—AGREEMENT TO MAKE WILL—REVOCATION—TRUST—PART PERFORMANCE.

1. An agreement to devise land, upon sufficient consideration, may be enforced specifically in a proper case.
2. It is sufficient if the agreement is that the promisee shall receive the property, or that it shall be left him at the decease of the promisor. There need not be an express promise to make a will.
3. Equity will impress a trust upon the property in such cases, which will follow it into the hands of personal representatives or devisees of the promisor.
4. An agreement to leave property by will is not ambulatory or revocable after performance on the part of the promisee.
5. Part performance of such a character that the court cannot restore the promisee to the situation in which he was when the agreement was made, or compensate him in damages, is sufficient to take the case out of the statute of frauds.

(Syllabus by the Court.)

Commissioners' Opinion. Department No. 3. Appeal from District Court, Johnson County; Letton, Judge.

Suit by Charles Best against Helen Grolapp and others. Judgment for plaintiff. Defendants appeal. Affirmed.

M. B. C. True and Jas. E. Philpott, for appellants. L. C. Chapman and J. B. Douglas, for appellee.

POUND, C. This is a suit to quiet title. The plaintiff, who is in possession of the premises in controversy, alleges that on the 22d day of May, 1899, and for many years prior thereto, his father, now deceased, was the owner and in possession of the property; that his father was an old man at that time; that all his children were of full age, and living out of the state, and that his wife was divorced; that under these circumstances, his father, being without suitable care, attention, and protection, agreed with the plaintiff, who was then in business in the state of Kansas, that if the plaintiff would abandon his business there, and return with his family to the property in controversy, take charge thereof and of the father, and provide him with suitable home and attention until his death, the plaintiff should receive at his death the land in question, and other property not material to this controversy. He further alleges that, in pursuance of and part performance of said agreement, and in reliance thereon, he closed out his business in Kansas, sold his property in that state, except such as he could use at his father's home in Nebraska, and removed to the property, upon which he and his family have resided ever since; that

Digitized by Google

he performed in all respects everything on his part to be done and performed under said agreement; and that he assumed and paid all the funeral expenses and expenses of the last illness of his father, and all other claims that might be charged as debts against his father's estate, including certain expenses of removing a cloud upon his father's title to the property. He also alleges that his father died on the 14th day of March, 1901, and that five of the children and heirs at law of his father have since that time conveyed and quitclaimed to him all title or interest which they might have in the property. Three children and the heirs of a fourth, deceased, who have not executed such conveyances, are made defendants, and the petition prays that the title to the property may be quieted in the plaintiff as against them. The trial court found generally for the plaintiff, and against the defendants, and rendered a decree as prayed for.

We think the findings and decree are right, and should be affirmed. An agreement to devise land, upon sufficient consideration, may be enforced specifically in a proper case. Howe v. Watson, 179 Mass. 30, 60 N. E. 415; Bird v. Jacobus, 113 Iowa, 194, 84 N. W. 1062; Whiton v. Whiton, 179 Ill. 32, 53 N. E. 722. It is sufficient if the agreement is that the promisee shall receive the property, or that it shall be left him at the decease of the promisor. There need not be an express promise in so many words to make a will. Kofka v. Rosicky, 41 Neb. 328, 59 N. W. 788, 25 L. R. A. 207, 43 Am. St. Rep. 685. Equity will impress a trust upon the property in such cases, which will follow it into the hands of personal representatives or devisees of the promisor. Price's Adm'x v. Price's Adm'x (Ky.) 64 S. W. 746, 66 S. W. 529; Howe v. Watson, supra; Duvale v. Duvale, 54 N. J. Eq. 581, 35 Atl. 750; Id., 56 N. J. Eq. 385, 39 Atl. 687, 40 Atl. 440; Bruce v. Moon, 57 S. C. 60, 35 S. E. 415; Fogle v. St. Michael's Church, 48 S. C. 86, 26 S. E. 99; Smith v. Pierce, 65 Vt. 200, 25 Atl. 1092; Burdine v. Burdine's Ex'r, 98 Va. 515, 36 S. E. 992.

On behalf of appellants, the principal contention seems to be that the agreement in question, being testamentary in character, was ambulatory, and revocable during the life of the testator. But after performance on the part of the plaintiff of substantially everything to be done on his part, this cannot be true. To hold the agreement revocable under such circumstances would be to permit a fraud, which a court of equity could not sanction. This very question was decided in Bruce v. Moon, supra. It is also insisted that the agreement was within the statute of frauds. While there is some conflict of authority on this point, the authorities recognized and followed in this state hold that part performance of such a character that the court cannot restore the promisee to the situation in which he was when the agreement was made, or compensate him in damages, is sufficient to take the case out of the statute of frauds. Kofka v. Rosicky, 41 Neb. 328, 59 N. W. 788, 25 L. R. A. 207, 43 Am. St. Rep. 685; Rhodes v. Rhodes, 3 Sandf. Ch. 279; Shahan v. Swan, 48 Ohio St. 25, 26 N. E. 222, 29 Am. St. Rep. 517; Sutton v. Hayden, 62 Mo. 101. This doctrine has the support of many recent decisions. Winne v. Winne, 166 N. Y. 263, 59 N. E. 832, 82 Am. St. Rep. 647; Svanburg v. Fosseen, 75 Minn. 350, 78 N. W. 4, 43 L. R. A. 427, 74 Am. St. Rep. 490; Owens v. McNally, 113 Cal. 444, 45 Pac. 710, 33 L. R. A. 369; Carmichael v. Carmichael, 72 Mich. 76, 40 N. W. 173, 1 L. R. A. 596, 16 Am. St. Rep. 528. Where a man of middle age, and the head of a family, closes out his business, disposes of his property, presumably at a sacrifice, as is inevitable in such cases, and removes to another state for the purpose of taking charge of the property and person of an aged parent, the entire course of his life is so far changed that it would be impossible to compensate him adequately in damages, or to restore him, after a lapse of some years, to his original position. To permit the statute of frauds to be asserted in such a case is to work a fraud upon the promisee. In the brief on behalf of appellants, some claim is made with respect to the statute of homesteads. We do not think that statute involved in any way. It appears that all the children of the deceased had come of age and left the state long prior to the agreement in question. His wife was long since divorced, and, except as against the claims of creditors with respect to debts incurred during the continuance of the marriage relation, no homestead rights attached to the land. Several of the questions involved in this case were before the court in Teske v. Dittberner (Neb.) 91 N. W. 181. But, as a rehearing is pending, chiefly, however, upon question as to the effect of the homestead statute upon the circumstances of that case, we have preferred to treat the questions at issue independently.

It is recommended that the decree be affirmed.

DUFFIE and KIRKPATRICK, CC., concur.

PER CURIAM. For the reasons stated in the foregoing opinion, the judgment of the district court is affirmed.

STAUNCHFIELD et al. v. JEUTTER.

(Supreme Court of Nebraska. Sept. 17, 1903.)

MORTGAGE—DEFICIENCY JUDGMENT — TRUST DEED—FORECLOSURE—MORTGAGEE IN POSSESSION—WASTE—RECORD OF DEED.

1. In an action to recover a deficiency after foreclosure of a mortgage the mortgagor may set up, by way of counterclaim, damages sustained by reason of waste committed by the mortgagee in possession.

2. A trust deed executed by way of security is, in effect, a mortgage, and foreclosure there-

¶ 1. See Mortgages, vol. 35, Cent. Dig. § 1614.

of out of court by sale under the powers therein contained conveys no title.

3. Where a mortgagee in possession under such a sale disposes of buildings upon the property, and permits them to be removed by the purchasers, he becomes liable for waste.

4. It is presumed that the laws of another state are the same as our own, in the absence of proof to the contrary.

5. The record of a deed may be shown without inquiry as to the original whenever the evidence as a whole fairly indicates that the original is not in the possession or under the control of the party offering such proof.

6. But in such case the record is primary evidence, by virtue of section 13, c. 73, Comp. St. 1901, and the rule that there are no degrees of secondary evidence does not apply.

Commissioners' Opinion. Department No. 3. Error to District Court, Dawson County; Sullivan, Judge.

"Not to be officially reported."

Action by John B. Staunchfield and others against Karl Jeutter. Judgment for defendant, and plaintiffs bring error. Reversed.

Reavis & Reavis and E. A. Cook, for plaintiffs in error. George C. Gillan, for defendant in error.

POUND, C. This is an action upon a note, evidently brought to recover a deficiency after foreclosure of a trust deed. The defendant sets up that plaintiff, through his agents, foreclosed without notice to or knowledge of the defendant, and while in possession under such foreclosure sold a house upon the land, which was removed by the purchaser. He pleads also that plaintiff's agent entered into an agreement with defendant whereby the latter was to convey the land in consideration of $25 and surrender of the papers, and that in pursuance of such agreement he executed a deed, which plaintiff's agent caused to be recorded. Trial was had to the court, which found for the defendant. Proceedings in error are brought by the executors of the plaintiff, who died pending suit.

The answer is very carelessly drawn, and a great deal is left to inference or intendment without any specific allegation. As its sufficiency was challenged at every stage in the lower court, we have some doubt whether, in its present form, it will sustain a judgment. But the defenses which the pleader was evidently endeavoring to state are, in our judgment, maintainable. In an action to recover a deficiency after foreclosure of a mortgage, the mortgagor may set up, by way of counterclaim, damages sustained by reason of waste committed by the mortgagee in possession. Smith v. Fife, 2 Neb. 10. Possibly it would be better to say that the mortgagor might treat the sale of the house severed from the freehold as a conversion, and, waiving the tort, maintain a set-off in quasi contract to recover the value. Wherever one might waive a tort and sue in assumpsit at common law, he may maintain a set-off under the Code against any claim arising out of contract. Several cases which really involve set-off have been spoken of as cases of counterclaim, as, for instance, Sheibley v. Dixon County, 61 Neb. 409, 85 N. W. 399. But the question is not material in this case. A trust deed executed by way of security is, in effect, a mortgage, and foreclosure thereof out of court by sale under the power therein contained conveys no title. Comstock v. Michael, 17 Neb. 288, 22 N. W. 549. Hence, where a mortgagee in possession under such a sale disposes of buildings upon the property, and permits them to be removed by the purchasers, he becomes liable for waste. It is true in this case the property was in an adjoining state. But there is no evidence as to the laws of that state, and, in the absence of proof to the contrary, we must presume that the laws of that state are the same as our own. Schmitt & Bro. Co. v. Mahoney, 60 Neb. 20, 82 N. W. 99; Welton v. Atkinson, 55 Neb. 674, 76 N. W. 473, 70 Am. St. Rep. 416. We do not think, however, that a judgment for the defendant can be supported on this defense alone. The plaintiff credits $200 as the proceeds of trustee's sale. If the defendant insists the sale was invalid, the plaintiff, as purchaser at the sale, is not to be charged with that sum. The damages which the evidence will fairly show upon the defendant's counterclaim are not at all sufficient to wipe out the whole amount of the note and interest.

As to the other defense, as the reply is a general denial, an essential part of defendant's case was to show the contents of the deed he claims to have made to plaintiff under his agreement with plaintiff's alleged agent. He attempted to prove this by testimony that he had examined the records of the county in which the land lay, where he found it recorded, and that he knew its contents, at least as to the point in question, only from inspection of such record. He was then permitted to state who were the grantees, as shown by the record. This evidence, which was objected to, was clearly incompetent, and will not support the findings and judgment. The record of a deed may be shown without inquiry as to the original whenever the evidence as a whole fairly indicates that the original is not in the possession or under the control of the party offering such proof. Delaney v. Errickson, 10 Neb. 492, 501, 6 N. W. 600, 35 Am. Rep. 487; Rupert v. Penner, 35 Neb. 587, 53 N. W. 598, 17 L. R. A. 824. But in such case the record is made primary evidence by the express provisions of section 13, c. 73, Comp. St. 1901, and hence the rule that there are no degrees of secondary evidence does not apply. Unless properly acknowledged substantially in accordance with the statute, the deed would not be entitled to record, nor the record admissible in evidence. Maxwell v. Higgins, 38 Neb. 671, 57 N. W. 388. The evidence received in the case at bar does not even purport to show that the record claimed to have been examined would have been competent. As the cause was tried to the

Digitized by Google

court, there is, of course, a presumption that this evidence was not considered. But, if we leave it out of account, the defendant's case is without support in a material respect.

We recommend that the judgment be reversed, and the cause remanded for a new trial.

DUFFIE and KIRKPATRICK, CC., concur.

PER CURIAM. The conclusions reached by the Commissioners are approved, and, it appearing that the adoption of the recommendations made will result in a right decision of the cause, it is ordered that the judgment of the district court be reversed, and the cause remanded for further proceedings according to law.

SCHLEMME v. OMAHA GAS MFG. CO. et al.

(Supreme Court of Nebraska. Sept. 17, 1903.)

RES JUDICATA.

1. A judgment of a court of competent jurisdiction upon a question directly involved in one suit is conclusive as to that question in another suit between the same parties.

2. When a second suit is upon the same cause of action and between the same parties as the first, the judgment in the former is conclusive in the latter as to every question which was or might have been presented and determined in the former.

Commissioners' Opinion. Department No. 1. Error to District Court, Douglas County; Slabaugh, Judge.

"Not to be officially reported."

Action by Frederick Schlemme against the Omaha Gas Manufacturing Company and others. Judgment for defendants, and plaintiff brings error. Affirmed.

James H. McIntosh, for plaintiff in error. George E. Pritchett, for defendants in error.

OLDHAM, C. The plaintiff in this cause of action, Frederick Schlemme, is the owner of lot 3 in block 4 in Improvement Association Addition to the city of Omaha, Neb., upon which he resides, and on which, in addition to his residence, he had erected two other dwelling houses, which were occupied by tenants. The Omaha Gas Manufacturing Company owned a lot contiguous to and adjoining plaintiff's lot. Prior to the year 1897, the gas company had constructed and was maintaining a gas storage basin diagonally across the street from the plaintiff's lot, and in the year 1897 began the construction of a gas holder or storage basin on the lot adjoining plaintiff's premises. The gas holder is a large metallic storage basin, about 103 feet in diameter at the base, and is constructed in three sections, each about 25 feet in height, so arranged that they slide up and down within each other, like the sections of a telescope, and when the structure is fully expanded, it stands substantially 75 feet in height. When defendant began the erection of this gas holder on the lot adjacent to plaintiff, plaintiff instituted an action in the district court of Douglas county for the purpose of restraining the erection of the structure, alleging that it was being erected in violation of the ordinances of the city, and that, if erected and used for storing gas, there would be danger of explosion, leakage of gas, injury to health, tainting of the air and soil, and injury to the water in the well used by plaintiff and his tenants. A restraining order issued on this petition was subsequently dissolved by the trial court, and, the erection of the storage basin having progressed to completion, plaintiff amended his petition, and alleged that he had been damaged in the sum of $1,000 by the erection and maintenance of the gas holder, which he charged constituted a continuing nuisance to his adjacent property by making loud noises, emitting poisonous and noxious gases, obstructing his vision, endangering the life and health of his family and tenants, and destroying the rental value of his premises. The gas company answered the amended petition, admitting the erection of the gas holder, but denying that such structure constituted a nuisance. On issues thus joined there was a trial to the court, and judgment for defendant on the following special finding: "That said gas holder is not a nuisance, and is not offensive or dangerous to the health of plaintiff or to his family or his tenants, or dangerous to the property of plaintiff or his family or his tenants." This judgment was rendered April 21, 1899, and no appeal or error proceeding were ever instituted for its review. In December, 1901, plaintiff, by other counsel, instituted the present cause of action against the same defendant for maintaining a nuisance to his realty by the erection and operation of the same structure. The only material difference between the petition filed in the present cause of action and the supplemental petition on which judgment was rendered in 1899 lies in the superior literary merit of the present petition in the use of descriptive adjectives, e. g.: the former petition charged that the structure was a nuisance for making continuous noises, while the latter petition, describing the motion of the sections of the gas holder in moving up and down within each other, says that "they cause loud, rasping, grating, discordant, annoying, vexatious, and nerve-torturing sounds, so distressing and disturbing to plaintiff and his family and his tenants upon said premises as to render said premises unfit for habitation or abode." In the petition on which judgment was rendered the structure was alleged against for obstructing plaintiff's vision. In the present cause of action it is alleged that the tank is so "large in its circumference, so towering in its height, and so near plaintiff's premises,

¶ 2. See Judgment, vol. 30, Cent. Dig. § 1241.

Digitized by Google

so ungainly and towering in its blackness and deformity, and so unsightly and monstrous in its construction, and so obstructs plaintiff's premises and the light and air, and so impregnates the air in and about plaintiff's said premises with escaping gas therefrom, that it has and does, and will permanently, damage and injure said property." In the former petition it was alleged that the structure leaked, and allowed quantities of heated and bad smelling gas to escape, and pollute the adjoining atmosphere. In the present petition there is an allegation not specifically contained in the former supplemental petition, that, at or about the time of the construction of the tank, there was erected and constructed, as auxiliary thereto and part of the appliances thereof, four large and high blow or smoke stacks, and "that when defendants, as they do day and night, are filling or storing said gas in said tank, and at all times when said defendants are using said blow or smoke stacks, which blow or smoke stacks are near said tank and near plaintiff's said premises, great volumes of noxious and poisonous vapors, gases, and flames of smoke, and other deleterious substances, are emitted therefrom, filling and impregnating the air in and upon plaintiff's said premises, filling the houses thereon, and rendering the same untenantable." Defendant filed substantially the same answer to this petition that it did to the supplemental petition on which the former judgment was rendered, and added a defense of estoppel by the former judgment. On issues thus joined, and after the close of the testimony, the court directed a verdict for defendant, and plaintiff brings error to this court.

It is a well-established rule that a judgment of a court of competent jurisdiction upon a question directly involved in one suit is conclusive as to that question in another suit between the same parties. 1 Herdman on Estoppel and Res Judicata, p. 112. Now the only question to be determined from the record and evidence in this case is as to whether every issue involved in the present controversy might have been adjudicated between these same parties at the hearing on the supplemental petition in the district court of Douglas county in 1897. While the present petition has described in much more forceful and graphic language the annoyance and injury claimed to have been suffered by plaintiff from the erection and maintenance of the tank, yet we cannot say that this picturesque description has laid a foundation for any proof that would not have been admissible under the former petition. If anything is added that would charge a different nuisance, it is the allegation with reference to the erection of the four smokestacks as auxiliary to, and connected with, the operation of the gas tank. The petition, however, discloses the fact that these auxiliaries were erected at or about the time the gas tank was placed near plaintiff's premises, so that, if these auxiliaries existed outside of the fertile imagination of the author of the petition, they were in being, and emitting "great volumes of noxious and poisonous vapors," at the time of the former trial, and evidence of such fact might have been introduced under the allegation in the former petition of the emission of poisonous vapors from the tank. However, we have examined the evidence in this case carefully, and find not a word of testimony that any such smokestacks ever existed, either as auxiliary to, or in any manner connected with, the gas holder; so that, even if plaintiff has alleged a new cause of action, which could not be determined in the former adjudication, he is entirely without evidence to support his new allegations, and the judgment of the district court directing a verdict is fully supported for want of testimony on any issue which was not determined at the former hearing. We think that the rule is well established that, when a second suit is upon the same cause of action and between the same parties as the first, the judgment in the former is conclusive in the latter as to every question which was or might have been presented and determined in the former. Fulliam v. Drake (Iowa) 75 N. W. 479; Ross v. Portland (C. C.) 105 Fed. 682; Foulke v. Thalmessigner, 158 N. Y. 725, 53 N. E. 1125.

It is therefore recommended that the judgment of the district court be affirmed.

AMES and HASTINGS, CC., concur.

PER CURIAM. The conclusions reached by the Commissioners are approved, and, it appearing that the adoption of the recommendations made will result in a right decision of the cause, it is ordered that the judgment of the district court be affirmed.

ULRICH v. McCONAUGHEY.

(Supreme Court of Nebraska. Sept. 17, 1903.)

PARTNERSHIP—ASSIGNMENT—EFFECT.

1. Where one partner of a firm conveys or assigns partnership property, and such assignment is concurred in by the other member of the firm, the assignee will have a right to the property assigned superior to one whose claim is based upon a subsequent assignment from one member of the partnership.

2. Instructions examined, and *held* not erroneously given.

3. Former opinion (Ulrich v. McConaughey, 88 N. W. 150) modified.

(Syllabus by the Court.)

Commissioners' Opinion. Department No. 1. On rehearing. Modified.

For former opinion, see 88 N. W. 150.

KIRKPATRICK, C. This is a replevin action, tried in the district court of Hamilton county. An opinion was filed in the case on November 20, 1901. Ulrich v. McConaughey (Neb.) 88 N. W. 150. The questions involved in the controversy are stated at length in the

Digitized by Google

former opinion, and therefore need not be restated herein. We have made a careful examination of the entire record, and are of the opinion that the conclusion reached at the former hearing in this court is correct as announced in paragraphs numbered 1, 2, 3, 4, 5, and 7 of the syllabus. So much of the opinion, therefore, as relates to these paragraphs of the syllabus just mentioned, we adhere to, further discussion thereof being unnecessary at this time.

In the former opinion, and in the sixth paragraph of the syllabus thereof, it is said: "A partner cannot apply partnership property to the payment of his individual liability without the consent of his copartner." The record, as we view it, makes a re-examination of the proposition here announced necessary for the purpose of determining its applicability to the evidence in the case. Instruction No. 6 given by the court was in the language following: "If you find from the evidence that H. S. Brown and S. S. Brown were partners respecting the land mentioned in the evidence and the crops to be grown thereon, then, and in that event, any contract made in the line of said partnership by either of them would be binding on both, and the first transfer, made in good faith, and for a valuable consideration, by either of them, respecting the leases in controversy, would be binding on all parties concerned, and the party taking such first assignment would acquire the first and best title thereto." The correctness of this instruction as an abstract proposition was not passed upon in the former opinion, but it was held that the judgment of the district court should be reversed because of the inapplicability of that instruction to the evidence. In brief of counsel for plaintiff in error, respecting this instruction, it is said: "It is wrong in this: First, the instruction assumes the jury would be warranted in finding from the evidence that said Browns were equal partners in the ownership of the land; second, in this: that the first disposition made of the leases by one of them for a valuable consideration would be binding, leaving out the important provision, 'if in the line of partnership business.'" We are of opinion that the instruction is not vulnerable in respect of either of the objections urged. Regarding the first objection, it may be said that counsel for plaintiff in error seems to be under a misapprehension. It is clear to us that, taken in connection with the other instructions given, the instruction very fairly and clearly submits for consideration of the jury the real question involved. Our examination of the evidence has led us to the belief that it establishes beyond question the partnership of the two Browns in the ownership, not only of the land, but of the crops to be grown thereon. From the evidence of the partners themselves it is shown without substantial dispute that Mrs. Brown had advanced, to be used in the partnership business, from her separate estate, between $500 and $600, some time before the controversy herein arose. While it is undisputed that S. S. Brown gave his individual note to his wife for the money borrowed, it is, we think, equally clear that the money was used in the prosecution of the partnership business, the greater portion of it being used in the payment of the amount due to plaintiff in error or his assignor upon the contract relating to the land used by the Browns in their business. The fact that S. S. Brown gave his individual note would not, we think, change the character of the debt from a partnership to an individual debt; but whether it was a partnership debt or not would depend upon the contract of partnership between the two Browns. S. S. Brown testified that he was to furnish the capital for the business of the copartnership. His money was to be returned to him with good interest, and the profits in the business thereafter remaining were to be divided. If to borrow the money in question from Mrs. S. S. Brown did not create a partnership debt, it would be because of an agreement on the part of S. S. Brown that he was in fact to advance the partnership capital; but in no view of the evidence in the case is it necessary to determine whether this was or was not a partnership debt, and we do not determine it. Very shortly after the execution of the lease in controversy, and about May 1, 1891, S. S. Brown assigned the duplicates of his leases to his wife in payment of the money due her. These assignments were forwarded to H. S. Brown, in Illinois, for his execution, and they seem to have been by him executed at once, but not actually returned to Mrs. Brown until August 1st. It seems that the partnership business resulted in a loss from its inception, and it is undisputed that practically all of the capital used therein, amounting to something like $15,000, had been advanced by S. S. Brown, the member of the firm who lived in Nebraska. While it is not disclosed that the affairs of the partnership business had been settled, or that any adjustment whatever had been made, yet it is disclosed that H. S. Brown, who had some time previously returned to Illinois, had nothing but a nominal interest in the affairs of the copartnership.

Plaintiff in error claimed title to the corn in controversy by virtue of an arrangement with H. S. Brown, the partner residing in Illinois, by the terms of which H. S. Brown agreed to, and did in fact, surrender to plaintiff in error the bond for a deed covering the land, the same being the only title held by the partnership to the land. While this bond for a deed was made in the name of H. S. Brown individually, the evidence amply justified a finding that it was partnership property, and that this was well known to plaintiff in error. The rule is that, if property is bought by a partner in a firm, acting for the firm, the property belongs to the partnership as soon as the sale is complete, because the

purchaser is the firm; and the fact that title to real estate is taken in the name of one member does not deprive it of the character of partnership property. Catron v. Shepherd, 8 Neb. 308, 1 N. W. 204; Barber v. Crowell, 55 Neb. 571, 75 N. W. 1109; Bowen v. Billings, 13 Neb. 439, 14 N. W. 152. It further appears that this agreement was verbal, but that at a later date it was to be reduced to writing. It was so reduced to writing on September 23, 1891. On that date H. S. Brown gave to plaintiff in error an order on the several tenants living on the land to turn over the rent share of the corn to plaintiff in error. The leases had been made in the name of S. S. Brown. There seems to be no room for question under the evidence that H. S. Brown executed this written agreement, and gave the order upon the tenants some time after he had executed the assignment of the leases to Mrs. Brown, and had forwarded them either to her or to her husband to be delivered to her. In the view we take of the evidence, it is not necessary to determine the day upon which the contract between H. S. Brown and plaintiff in error was entered into, or when it became effective, or whether H. S. Brown had authority to execute this kind of a contract, surrendering title to the partnership land without the knowledge or consent of his partner; because, from any view that may be taken, the right of Mrs. Brown to the corn is prior in point of time to that of plaintiff in error. We are of opinion that the instruction was not prejudicial to plaintiff in error. It seems to have been applicable to the theory upon which the parties tried the cause.

It is contended that the instruction is erroneous because it states that the first transfer made by either partner would be effective, if for a valuable consideration, without limiting the power to make such assignment with the proviso, "if in the line of partnership business." The instruction does not fall when subjected to the test suggested. It must be read as a whole. It is therein said that "any contract made in the line of said partnership by either of them would be binding on both." This must, and would naturally be, read in connection with all that follows. It is apparent that it contains the essential element alleged to be absent therefrom.

Complaint is made with reference to other instructions, but defects therein, if any, are not specifically pointed out, and from an examination of the charge as a whole we feel warranted in saying that the case was fairly and intelligibly submitted. The cause seems to have been tried upon the theory that either partner had the right to make a conveyance in the line of partnership business without the concurrence of the other. The right of plaintiff in error rested entirely upon the agreement and conveyance claimed to have been made by H. S. Brown, who resided in Illinois, and who, as we have seen, did not have possession of the property, and had, at the most, only a nominal interest therein. Taking the record as a whole, and the charge of the court, we feel that the cause was properly submitted.

It is therefore recommended that the opinion heretofore rendered in this case be modified in accordance with the views herein expressed, and that the judgment of the district court be affirmed.

HASTINGS, C., concurs.

PER CURIAM. For the reasons stated in the foregoing opinion, the judgment heretofore rendered in this case is vacated, and the judgment of the district court is affirmed.

STATE ex rel. BAKER v. BAXTER, Judge.

(Supreme Court of Nebraska. Sept. 17, 1903.)

APPEAL—BOND—SUPERSEDEAS.

1. Where a decree awards the plaintiff a personal judgment against the defendants, and also directs the sale of pledged property by way of foreclosure, the defendants may supersede that portion of the decree providing for foreclosure of the pledge without superseding the money judgment.

2. In such case it is in the discretion of the district court to fix the amount and conditions of a bond to be given in order to supersede the decree of foreclosure.

3. If the district court fails to fix the conditions of the bond, application should be made for a further order, and there is no supersedeas until the terms of the bond are determined by the court and the required bond is given.

4. But in case bond is given in the amount fixed and upon reasonable conditions, and the district court, upon motion to direct an order of sale, approves the bond given, that is, in effect, equivalent to an order fixing the conditions as stated in such bond, and the irregularity is not prejudicial.

Commissioners' Opinion. Department No. 3.

"Not to be officially reported."

Application by the state, on the relation of Joseph L. Baker, for writ of mandamus to Irving J. Baxter, judge. Writ denied.

Brome & Burnett, for relator. Hall & McCulloch, for respondent.

POUND, C. The application for a writ of mandamus shows that relator obtained a decree in his favor in a suit pending in the district court, by which he was awarded a personal judgment against certain defendants, and also an order of sale of certain pledged property by way of foreclosure. There was a provision in the decree directing that "supersedeas bond for an appeal to the Supreme Court herein be and is fixed at $500." No order was made as to the conditions of the bond. The defendants executed and filed a bond in the sum designated in the decree, conditioned that if the defendants hold the relator "harmless by reason of any depreciation in the stock ordered to be sold by said decree, and shall pay the costs of appeal if the judgment be affirmed, then this obligation shall be null and void, otherwise to remain

Digitized by Google

in full force and effect." Afterwards relator applied to the clerk for an order of sale, and on refusal moved the court to direct that such order issue for the reason that there was no sufficient supersedeas. The court declined to do so, and relator now seeks to compel such action by mandamus. The respondent demurs.

As the decree awards relator a money judgment for nearly $13,000, which clearly comes within the purview of subdivision 1, § 677, Code Civ. Proc., we have no doubt that the order of the court and the bond are of no effect so far as that portion of the decree is concerned. Relator may have execution notwithstanding. But the remainder of the decree is not governed by said section 677. If it stood alone, the district court, in its discretion, would be authorized to allow a supersedeas upon such terms as to amount and conditions of the bond as it might fix. Penn Mutual Life Ins. Co. v. Creighton Theatre Bldg. Co., 51 Neb. 659, 71 N. W. 279; Home Fire Ins. Co. v. Dutcher, 48 Neb. 755, 67 N. W. 766. Can it matter that the decree of foreclosure is part of a decree which awards a money judgment also? We think not. In substance and effect there are two decrees, one for the recovery of money and one for foreclosure of a pledge. To dispose of the whole controversy in one suit, and thus do complete justice to the plaintiff, both are rendered in one proceeding, and as parts of one decree. The reason of the proceeding does not require, and justice to the defendants forbids, that this circumstance be held to compel superseding of the money judgment, which the defendants may not be able to do, in order to stay order of sale pending appeal from the decree of foreclosure, which they may be able and anxious to do if permitted. There appears to be precedent for superseding part of a decree covering more than one subject. Covington Stock Yards Co. v. Keith, 121 U. S. 248, 7 Sup. Ct. 881, 30 L. Ed. 914. And this court evidently regarded such practice as admissible in Johnston v. Craig, 61 Neb. 98, 84 N. W. 606.

From the amount and terms of the bond given, it is evident that the parties intended to supersede that portion of the decree providing for foreclosure of the pledge. To do this they should have obtained an order fixing the conditions of the supersedeas, as well as its amount, and there could be no supersedeas until the terms of the bond were determined by the court and the required bond was given. When the district court failed to fix the conditions in its order fixing the amount, application should have been made for a further order. Carson v. Jansen (Neb.) 91 N. W. 398. But a bond had been given in the amount fixed and upon reasonable terms appropriate to the case, and the district court, upon motion to direct an order of sale, approved the bond given. This was, in effect, equivalent to an order fixing the conditions as stated in such bond, and the irregularity was not prejudicial, much less available, in collateral proceedings. The amount and conditions of the bond were in the discretion of the district court, and mandamus is not a proper remedy to review its exercise thereof. If the amount is insufficient, application to this court by motion in the appeal proceedings will meet the case sufficiently. Tulleys v. Keller, 42 Neb. 788, 60 N. W. 1015.

We recommend that the writ be denied.

DUFFIE and KIRKPATRICK, CC., concur.

PER CURIAM. The conclusions reached by the Commissioners are approved, and, it appearing that the adoption of the recommendations made will result in a right decision of the cause, it is ordered that the writ applied for be denied.

VON FOREL et al. v. STATE ex rel. ANSLEY.

(Supreme Court of Nebraska. Sept. 17, 1903.)

STATE UNIVERSITY—BOARD OF REGENTS—MANDAMUS.

1. The State University of Nebraska is a state institution, and its board of regents is an agent of the state. State v. Moore, 64 N. W. 975, 46 Neb. 379, followed and approved.

2. The board of regents of the State University, in allowing certificates for salaries of professors in that institution, duly fixed by law, act ministerially, and mandamus will lie to compel their action in this particular.

3. State v. Mortensen (Neb.) 95 N. W. 831, examined and distinguished.

Commissioners' Opinion. Department No. 1. Error to District Court, Lancaster County; Frost, Judge.

"Not to be officially reported."

Application by the state, on the relation of Clarke F. Ansley, for a writ of mandamus to E. Von Forel and others. From a judgment granting the writ, defendants bring error. Affirmed.

Wilson & Brown, for plaintiffs in error. Clark & Allen, for defendant in error.

OLDHAM, C. This is a mandamus proceeding instituted on the relation of Clarke F. Ansley, a professor in the University of Nebraska, during the school year of 1898 and 1899, to compel the board of regents to issue a certificate for the balance of salary earned by him as an instructor in the institution during this year. The petition alleges that the salary of his position had been fixed at the sum of $1,500 per annum, that all services for the year had been rendered, and that defendants had issued him certificates to the amount of $1,250 and no more. There was a trial in the court below, judgment for the relator, and defendants bring error to this court. No motion for a new trial was filed in the court below, and consequently the only question before us for review is the sufficiency of plaintiff's petition to sustain the judgment.

Digitized by Google

In addition to the things above set out, the petition alleged that at the time of its filing there was and still is a fund in the state treasury, appropriated by the Legislature, to pay salaries of the University professors, the amount of which exceeds plaintiff's claim, against which said claim is a just and lawful charge.

It is urged by plaintiffs in error that this allegation is too indefinite, in that it fails to describe the funds or when they were appropriated. We think this allegation is clearly sufficient after judgment. And again, it is doubtful whether or not this allegation is essential in the proceedings against the board of regents. Since section 25, c. 87, Comp. St. 1901, provides that disbursements from the University funds shall be made by the State Treasurer upon warrants drawn by the auditor, who shall issue warrants upon certificates issued by the board of regents, signed by the president and secretary. While this allegation would undoubtedly be essential in an action against the auditor if he had refused to draw the warrant on a certificate presented, duly signed by the president and secretary of the board of regents, we are not fully convinced that it would be essential in an action to compel the officers of the board to issue the certificate for services rendered. But, in any event, we think the allegation sufficient against an attack made for the first time in this court.

It is further urged that the relator had an adequate remedy at law by suit for damages against the board, and consequently that mandamus will not lie. This contention is based on the theory that the State University is an educational corporation, and not, properly speaking, a state institution. But this contention flies in the face of a long line of decisions of this court, beginning with Regents v. McConnell, 5 Neb. 428, and ending with State v. Moore, 46 Neb. 379, 64 N. W. 975, in which we held that the University is a mere state institution, and the board of regents a state agent. In the latter case it was specifically held that the State University is a state institution, and that the funds of the University were not merely intrusted to the State Treasurer as custodian for the University, but were covered into the treasury and became a part of the state's funds, intrusted to him in his official capacity as State Treasurer. Section 5, c. 87, makes it the duty of the board of regents to fix the salaries of the professors and instructors in that institution, and section 25 makes it the duty of the regents to certify claims against the institution to the auditor. It is a well-established principle that county and city boards and the auditor of public accounts of the state act ministerially in allowing claims for salaries fixed by law, and that when they refuse to act mandamus will lie to compel action.

It was urged in the oral argument by plaintiffs in error that this case is controlled by the recent decision in State v. Mortensen (Neb.) 95 N. W. 831, which held that mandamus will not lie against state officers to compel the specific performance of contracts. This is as far as the decision goes. In the case at bar mandamus was invoked, not to compel the specific performance of a contract, but to require the issuance of a certificate for services rendered under a compensation fixed by law.

It is therefore recommended that the judgment of the district court be affirmed.

AMES and HASTINGS, CC., concur.

PER CURIAM. The conclusions reached by the Commissioners are approved, and, it appearing that the adoption of the recommendations made will result in a right decision of the cause, it is ordered that the judgment of the district court be affirmed.

O'BRIEN v. STATE.

(Supreme Court of Nebraska. Sept. 17, 1903.)

CONSPIRACY—EVIDENCE — DECLARATIONS OF CO-CONSPIRATORS—ORDER OF PROOF —INSTRUCTIONS.

1. A conspiracy, like any other fact which is the subject of judicial investigation, may be proved inferentially or by circumstantial evidence.
2. The acts and declarations of a conspirator during the pendency of the conspiracy, and in furtherance of the common purpose, are admissible in evidence against his associates.
3. A conspiracy to steal and sell hogs for the benefit of all engaged in the illegal enterprise is pending until the sale has been made and proceeds divided.
4. Before the acts and declarations of a conspirator are entitled to be considered as evidence against his associates, the conspiracy itself must be established, but the order of proof is a matter within the discretion of the trial court.
5. The word "evidence," in its technical meaning and common acceptation, includes all the means by which any fact in dispute at a judicial trial is established or disproved.
6. When the trial court gives an accurate, pertinent, and intelligible instruction covering a particular point it is not bound, at counsel's request, to give another instruction, expressing the same idea in more perspicuous phrase.
7. Evidence examined, and found sufficient to sustain the verdict.

(Syllabus by the Court.)

Error to District Court, Sarpy County; Read, Judge.

Patrick O'Brien was convicted of larceny, and brings error. Affirmed.

J. J. O'Connor and Cooper & Dunn, for plaintiff in error. F. N. Prout, Atty. Gen., and Norris Brown, Dep. Atty. Gen., for the State.

SULLIVAN, C. J. Frank Harrington, Frank Meister, John Hennessy, and Patrick O'Brien were charged in the district court of Sarpy county with the larceny of six hogs, of the value of $90. O'Brien was given a separate trial, and was convicted. He claims

¶ 1. See Criminal Law, vol. 14, Cent. Dig. § 1014.

Google

a reversal of the sentence on the grounds (1) that the evidence is insufficient to sustain the verdict; (2) that statements and declarations of his codefendants were received as evidence against him; and (3) that the court erred in giving and refusing instructions. The main facts indicative of guilt which the evidence tends to prove are these: On August 12th, the day before the theft of the hogs, four men, with a team of horses and lumber wagon, were seen idling near the farm of Adam Mohr, the complaining witness. One of the men was O'Brien, another was Harrington, the other two have not been identified. These men, when questioned as to their business, said they were fishing in the Platte river, but they did not seem to have any fishing tackle or other usual equipment of the angler. One of them lay prone upon the ground, and was apparently averse to showing his face. Late in the afternoon, perhaps about 5 o'clock, Harrington went over to the Mohr farm, but the real or pretended object of his visit is not disclosed by the record. That night the hogs were stolen. They were put into a lumber wagon, and brought by Meister to the South Omaha market, where they were sold about 8 o'clock the next morning. Meister and Harrington were roommates. They had a room in the Ætna House, in Omaha. In this room O'Brien was found undressed and fast asleep between 3 and 4 o'clock in the afternoon of August 13th. There was hog manure upon his shoes, and hanging on the wall was a pair of wet and dirty overalls. When asked to account for his presence in the room, he at first refused to do so, but afterwards said he had been drunk the night before, and that some one had brought him up there and put him to bed. When O'Brien and Meister were in jail together at Papillion they considered the advisability of admitting an acquaintance with Harrington in case he should be arrested, and concluded, on account of some previous admissions, that it would be best to own they knew him. The defense attempted to prove an alibi. O'Brien, testifying on his own behalf, said that he visited Avoca, Iowa, on August 12th, and did not return to Omaha, where he lived, until after 9 o'clock on the evening of that day; that on the following morning he got up early, ate breakfast, and without any apparent provocation went out on a solitary spree. By noon he had taken eight glasses of whisky, and considered himself drunk. He then fell in with Harrington, who took him to the room in the Ætna House to sleep and sober up.

There was other direct and positive evidence tending to sustain defendant's claim that he slept at his father's house on the night of August 12th, but we cannot say, upon the whole record, that the jury were not warranted in rejecting it. Although the evidence against defendant is altogether circumstantial, we cannot say that it is insufficient.

It is alleged as error that the court received as evidence of defendant's guilt acts and declarations of both Harrington and Meister. We think there is no just ground for this complaint. Meister said to Williams, the person to whom he sold the hogs, that he had raised them at Elkhorn, but this statement was open to no valid objection. It was part of the res gestæ. It was designed to lull suspicion, and facilitate the sale, and was therefore imputable to all who were concerned in the theft. The conspiracy, if there was one, was still pending. It embraced not only the larceny of the hogs, but the disposition of them in the market, and the division of the proceeds. What Meister said to Williams being clearly in furtherance of the common design and purpose, all who were to profit by it must be held to have assented to it. Stratton v. Oldfield, 41 Neb. 702, 60 N. W. 82; Lamb v. State (Neb.) 95 N. W. 1050; Baker v. State, 80 Wis. 416, 50 N. W. 518; 2 Am. & Eng. Encyc. Law (2d Ed.) 866; 3 Greenleaf, Ev. 94. These remarks apply also to other objections made by counsel for defendant on the theory that the acts and declarations of the alleged conspirators which were given in evidence did not form part of the res gestæ. It is conceded, of course, that the acts and declarations of one conspirator are not evidence against another unless the conspiracy itself is established; but in this case there were facts and circumstances sufficiently proven from which a conspiracy might well be inferred.

The sixth paragraph of the court's charge was excepted to, but we think it unobjectionable. It is an intelligible and entirely accurate statement of the rule that when a conspiracy has been proven what each of the conspirators did or said in furtherance of the joint enterprise is admissible in evidence against his associates. The rule might, certainly, have been stated with greater precision, but the meaning of the instruction, whether read closely or hastily, is, in our opinion, unmistakable.

The thirteenth paragraph of the charge is said to be defective because in it the jury were told that a reasonable doubt "is one arising from the candid and impartial investigation of all the evidence in the case, or such doubt of the defendant's guilt as may exist in your minds because of a want of sufficient evidence to convince you of the defendant's guilt." Counsel say the jury should have been directed to take into account circumstances as well as evidence. We think the instruction correct, and the criticism without merit. Evidence, as defined by lexicographers and law writers, includes all the means by which, in a judicial trial, it is sought to establish or disprove any material allegation of a civil or criminal pleading. Any circumstance which affords an inference as to whether the matter alleged is true or false is therefore evidence, and is

Digitized by Google

commonly understood to be within the meaning of that term. Lamb v. State (Neb.) 95 N. W. 1050; 1 Greenleaf, Ev. § 1; Thayer, Cas. Ev. p. 2; Jones, Ev. § 3.

In the eighth paragraph of the charge the court told the jury that circumstantial evidence to warrant a conviction must exclude every reasonable hypothesis except the one implying defendant's guilt, and that incriminating circumstances not proven beyond a reasonable doubt were not entitled to any weight or influence. It is not claimed that this statement of the rule is inaccurate, but it is said to be, on account of the language used, beyond the comprehension of the average juror, and that the court erred in refusing to give the same thought in an instruction drawn by counsel for defendant and couched in plainer words. We are inclined to prefer the instruction drawn by counsel to the one given by the court, but there does not seem to be any great difference in their intelligibility. The meaning of each is, it seems to us, within the grasp and reach of ordinary men.

The judgment is affirmed.

WANECK v. KRATKY.

(Supreme Court of Nebraska. Sept. 17, 1903.)

BREACH OF MARRIAGE PROMISE.

1. Where, upon an agreement of marriage, the parties expressly agree that the ceremony shall be celebrated in accordance with the rules and customs of a particular religion and church, such rules and customs become a part of the contract, and binding upon the parties.

2. Where one of the parties to a marriage contract fails to perform his agreement at the time fixed for the ceremony, no reasonable excuse existing for such failure, the other party may rescind the contract, and maintain an action for damages.

(Syllabus by the Court.)

Commissioners' Opinion. Department No. 3. Error to District Court, Douglas County; Estelle, Judge.

Action by Mary Kratky against Charles Waneck. Judgment for plaintiff, and defendant brings error. Affirmed.

John D. Ware, for plaintiff in error. Henry C. Murphy and Charles L. Hover, for defendant in error.

DUFFIE, C. About November 1, 1900, the parties entered into an agreement of marriage, and on the following day they called on Father Bednar, a Catholic priest in charge of a church at South Omaha, to procure the publication of the banns, in accordance with the regulations of that church. The date of the marriage was fixed for November 27, 1900, at 8 o'clock a. m. On three successive Sundays after this visit to the priest, public announcement of their proposed marriage was made, in accordance with the laws and customs of the church. Following this announcement, and up to about the date fixed for their marriage, plaintiff in error continued to call upon the defendant in error, and, under the expectation that the marriage would take place as arranged, she secured bridesmaids, called home distant members of her family, invited friends, and made all preparations for the ceremony. It was arranged that plaintiff in error should call for his bride at the residence of her parents, but he failed to do so, and it was afterwards ascertained that he went to work in the usual manner at one of the packing houses in South Omaha, and, when called on by an attorney for defendant in error, gave as an excuse that Father Bednar had stated to the mother of defendant in error that he was not a good Catholic, and was not strong enough in the faith; that he was willing to be married by any other priest, or at the courthouse, or by any one authorized to perform the ceremony, but declined to have the ceremony performed by Father Bednar. Thereupon defendant in error elected to terminate the marriage contract, and brought this action for damages. The jury returned a verdict in her favor for something over $500, upon which the court entered judgment, and defendant has taken error to this court.

The principal error urged is that it is not shown that the plaintiff in error refused to marry defendant in error, and that his neglect to call for her and accompany her to the church, as agreed, does not, of itself, constitute a breach of the marriage contract on his part; especially in view of the fact that he informed her attorney that he was willing to consummate the marriage before any other priest or officer authorized to perform the ceremony. The rule is well established that attached to every contract of marriage is an implied condition that any subsequent change in mental or physical condition of either party, so as to render it impossible to accomplish the object of the marriage relation, releases the parties from the agreement. In such case no action will lie for breach of the contract. On the other hand, it is beyond controversy that where the parties expressly agree that their marriage shall be celebrated under and in accordance with the rules and customs of a particular religion and church, such rules and customs become a part of the contract, and binding upon the parties. In the case at bar the parties entered into such express agreement, even specifying the church and the priest. The day and hour of consummation was mutually agreed on by the parties, with the sanction and consent of the priest who was to perform the ceremony. This precaution was taken to avoid naming a day prohibited by the rules of the church. The violation of this part of their agreement, without just cause, amounted to a breach of the contract on the part of the plaintiff in error, and defendant in error, as she well might do, elected at the time to consider the contract ended, and to sue for damages. In Kelly v. Renfro,

Digitized by Google

9 Ala. 325, 44 Am. Dec. 441, it is said: "At the trial it appeared that an engagement of marriage existed between the plaintiff and defendant, that a day had been fixed for the marriage, preparations made, and the guests invited. On the morning of the day agreed upon, the defendant wrote a note to plaintiff's father, saying that he thought the engagement ought to be postponed, at least for the present. This note was not answered. The defendant offered to show that, shortly after the day set, he had proposed a performance of the contract; also, that before this action was brought, he had repeatedly proposed to consummate the marriage. This evidence the court ruled out. The defendant requested the court to charge the jury that if he, on the day set, proposed either a postponement or a rescission of the contract, the plaintiff's assent might be inferred from her silence at the time of this proposal, as well as from declarations made by her. This charge the court refused to give. * * * It is scarcely necessary to add that the charge requested was properly refused. No virtuous female could be expected to respond directly to the note which the defendant communicated to the plaintiff's father, and no other inference ought to be drawn from her silence than that the engagement was terminated, not merely postponed, by this act of the defendant, independent of any assent on her part." To the same effect is Jones v. Layman, 123 Ind. 569, 24 N. E. 363. In Halloway v. Griffith, 32 Iowa, 409, 7 Am. Rep. 208, it is said: "An offer on the part of a defendant to fulfill a marriage contract after his refusal to do so, or a continuance of the offer in open court, on condition that plaintiff dismissed the suit, should be disregarded by the jury either as a defense or in mitigation of damages." As in other cases, the rule is that, after a defendant has once broken his promise, his offer to renew is no defense on an action for its breach. The circumstances were most humiliating to the defendant in error. She had sent for her relatives, invited her friends, and was prepared to accompany the bridegroom to the church. Without excuse or explanation, he failed to meet his appointment, and left her to bear the shame and humiliation of his conduct. Under such circumstances, we think that defendant in error was justified in rescinding the contract, and in replying to his proposition, "After the trick you played me, I will not have you, in church or out of church."

The criticisms upon the instructions of the court are, we think, without merit. There was a clear breach of contract on the part of the plaintiff in error. The defendant in error promptly rescinded the contract, and brought this action for its breach. His proffer to consummate the agreement after breach and after rescission on the part of defendant ought not to be considered. We recommend an affirmance of the judgment.

KIRKPATRICK and POUND, CC., concur.

PER CURIAM. For the reasons stated in the foregoing opinion, the judgment of the district court is affirmed.

GERMAN MUT. FIRE INS. CO. v. FOX et al.

(Supreme Court of Nebraska. Sept. 17, 1903.)

INSURANCE—CONVEYANCE OF PROPERTY—FORFEITURE OF POLICY.

1. A conveyance of property in violation of restrictions in an insurance policy is of no importance if the property is reconveyed before a loss.

2. A conveyance of real estate by one joint owner to the other, which has been insured in their joint names, is not a violation of a forfeiture clause in the policy, providing that it should be void if the property was sold, transferred, or incumbered.

Commissioners' Opinion. Department No. 1. Error to District Court, Garfield County; Paul, Judge.

"Not to be officially reported."

Action by Daniel Fox and others against the German Mutual Fire Insurance Company. Judgment for plaintiffs, and defendant brings error. Affirmed.

F. P. Olmstead and Ed. P. Smith, for plaintiff in error. E. J. Clements and C. J. Bragg, for defendants in error.

HASTINGS, C. Four errors in the judgment rendered in this action upon an insurance policy for the loss of a barn are asserted by the defendant: First. That the court erred in refusing to instruct the jury to return a verdict for the defendant insurance company. This on the ground that the undisputed evidence showed there had been a change of ownership contrary to the terms of the policy between the time of its issuance and the occurrence of the fire. Second. Complaint is also made of instructions numbered 7, 8, and 9, as not properly submitting the questions as to the delivery of the insured's deed to the property, and as to ownership of the property at the time of the issuance of the policy. To the first question the insurance company's counsel devote 26 pages out of 33 contained in their brief. Of course, its decision in their favor would preclude the necessity of any examination of the others. The cause of the action was loss of a livery stable insured for $1,000 in a policy issued by the defendant company to Fox & Estabrook June 24, 1899. The barn was totally destroyed by fire June 16, 1902. The answer alleged that the facts stated in the plaintiffs' petition were not sufficient to constitute a cause of action, admitted its own incorporation, admitted that plaintiffs were the owners of the property when insured, admitted that it was destroyed by fire on June 16, 1902, admitted that notice was given, and admitted the denial of all liability

¶ 2. See Insurance, vol. 28, Cent. Dig. § 796.

Digitized by Google

on the company's part and refusal to pay, and denied liability. Defendant alleged that the policy contained a provision that it should become entirely void if the property were sold, transferred, or became incumbered by mortgage or trust deed without the written consent of the company indorsed on the policy. It alleged that on February 14, 1901, plaintiff Estabrook sold his one-half interest in the property to Fox, and that the latter, on March 5, 1902, conveyed the premises by warranty deed to James H. Forbes and Wm. T. McClain, and afterwards, on March 29, 1902, Forbes and McClain conveyed to Fox; that these transfers were without the knowledge or consent of the company, or indorsement of consent upon the policy; that it had no knowledge of the transfers until after the loss, when it declared the policy void, and denied liability. Plaintiff replied by general denial, except as to matters admitted, and then admitted the making of the deed by Estabrook to Fox in February, 1901, but said that Fox was a member of the firm of Fox & Estabrook, one of the plaintiffs; that when the policy was issued the plaintiffs were, and for a long time had been, partners, and still are, under the name of Fox & Estabrook; that when the policy was issued the title to the property stood in Daniel Fox and Oscar A. Estabrook jointly; that the property was then, and ever since has been, the property of the firm, each partner owning an undivided one-half; that at the time of entering into the partnership it was agreed that on the death of either partner the whole partnership property should belong to the survivor; that about February 14, 1901, Estabrook became dangerously ill, and for the purpose of carrying out this agreement executed a deed for his undivided one-half without any consideration whatever except the partnership agreement, and under the agreement that the deed should have no force and effect until Estabrook's death; that Estabrook did not die, and the deed took no effect. Plaintiffs admit that on March 5, 1902, Fox signed and acknowledged a warranty deed of the premises to Forbes and McClain. They say that no consideration was paid for this deed, and that it was never delivered, and that no sale, conveyance, or transfer of the property was effected by it; that through inadvertence the deed was placed on record without ever having been delivered, and without any intention that it should be, and did not in any manner transfer the title to the property from Fox to Forbes and McClain, or either of them. They admit that on March 29, 1902, Forbes and McClain executed and delivered to Fox a quitclaim deed, but say that it was done solely for the purpose of removing a cloud from the title of the premises, and that neither Forbes nor McClain ever had any interest in the property. The case seems to turn upon the question as to whether or not Estabrook's deed to his partner, Fox, in 1901, is a violation of the conditions of the policy. It is alleged in plaintiff's brief that there is no allegation in the petition that this is partnership property. This seems to be true, but it is alleged in the petition that it was the joint property of Fox and Estabrook, and it is alleged in the reply, and no exception taken to such pleading, that they are still partners, and this is, and always has been since the issuance of the policy, firm property. So far as the deed of Fox to Forbes and McClain is concerned, it is undisputed that in March prior to the fire the title of Forbes and McClain, whatever it was, was reconveyed to Fox, and was in Fox at the time the fire occurred. This would seem to render unimportant any question relating to the deed of Fox to Forbes and McClain. Where the title may have been during the term of the policy would be unimportant if, prior to the loss, it had been reconveyed to the parties for whom it was originally insured, or to one properly holding it under the terms of the policy. Home Fire Ins. Co. v. Johansen, 59 Neb. 352, 80 N. W. 1047; State Ins. Co. v. Schreck, 27 Neb. 527, 43 N. W. 340, 6 L. R. A. 524, 20 Am. St. Rep. 696; Omaha Fire Ins. Co. v. Dierks, 43 Neb. 473, 61 N. W. 740; Johansen v. Home Fire Ins. Co., 54 Neb. 548, 74 N. W. 866. It is true that all of the above cases relate to conveyances by mortgage, but we do not see why the same doctrine is not applicable to an absolute deed; and it was so applied in Power v. Ocean Ins. Co., 19 La. 28, 36 Am. Dec. 665, and Lane v. Maine Mut. Ins. Co., 12 Me. 47, 28 Am. Dec. 150. This being the situation, it becomes unnecessary to consider the state of the evidence as to the delivery of the deed made to Forbes and McClain. As to the effect to be given to the deed from Estabrook to Fox, this court is committed to the proposition that a sale made by a partner of partnership property to his partner is not a conveyance within the terms of this forfeiture clause. Phenix Ins. Co. v. Holcombe, 57 Neb. 622, 78 N. W. 300, 73 Am. St. Rep. 532. It is true that the holding in that case was with regard to personal property, and counsel for the company claim that it can have no application to real estate, and that in any event there is no claim in the petition that this is partnership property. They, however, cite no case holding the distinction between transfers of personalty and those of real property such as they seek to make. None is indicated in the cases which we have examined, and it seems unimportant, also, whether the property is held in partnership or merely in co-tenancy. A transfer between the assured owners is not held to be a violation of the policy, the entire property being insured to each of them. The reply in this case alleged in very express terms that the property belonged to the partnership, and no objection was made at the trial, so far as appears, to this form of pleading. We think, as is held in Allemania Fire Ins. Co. v. Peck, 133 Ill. 220, 24 N. E. 538, 23 Am. St. Rep. 610: "The condition requiring

notice to the insurance company of any contract to sell the property must be held to apply only to transactions between the assured and third parties, and it can have no application to contracts between the assured themselves for the transfer of their respective interests as partners or joint owners." Mr. Freeman, in his notes to this case (23 Am. St. Rep. 618), says that the weight of authority is decidedly in favor of this rule. We are, therefore, of the opinion that the conveyance of Estabrook to Fox, and the retention of the title by the latter to the time of the fire, constituted no defense. We are also of the opinion that the conveyance by Fox to Forbes and McClain of this property, which was reconveyed to Fox nearly three months before the fire, would not constitute any ground for forfeiture at the time the loss occurred. The claim that the actual ownership of the property was in the firm of Fox & Estabrook at the time of the trial seems amply sustained by the evidence, and is uncontradicted. In view of this holding it seems hardly necessary to examine the claims of error in the instructions. No other defense was attempted to be made.

There seems no occasion to discuss the claim in counsel's brief that the evidence, at all events, shows a change of possession of the property, and that this would work a forfeiture. No such defense is pleaded, and the evidence seems to indicate only a change of tenants, and that Forbes and McClain held, besides their lease, an option to purchase, which they never exercised. A mere change of tenants is not generally held to be ground of forfeiture under this clause of the policy, and is not claimed in the answer.

It is recommended that the judgment of the district court be affirmed.

AMES and OLDHAM, CC., concur.

PER CURIAM. The conclusions reached by the Commissioners are approved, and, it appearing that the adoption of the recommendations made will result in a right decision of the cause, it is ordered that the judgment of the district court be affirmed.

SUCKSTORF et al. v. BUTTERFIELD.

(Supreme Court of Nebraska. Sept. 17, 1903.)

REPLEVIN—PLEADING—AMENDMENT—CONDITIONS.

1. Petition and affidavit in replevin, which allege a special ownership in the property replevied, may be amended, so as to allege a general ownership in the property.

2. The terms on which an amendment to a petition may be permitted rest ordinarily in the sound discretion of the trial court.

Commissioners' Opinion. Department No. 1. Error to District Court, Wayne County; Boyd, Judge.

"Not to be officially reported."

Action by William H. Butterfield against August Suckstorf and another. Judgment for plaintiff, and defendants bring error. Affirmed.

Douglas Cones, for plaintiffs in error. W. W. Quivey and Powers & Hays, for defendant in error.

OLDHAM, C. This was an action of replevin originally instituted in the county court of Pierce county by plaintiff, William H. Butterfield, to recover the possession of 19 head of steers from defendants, Suckstorf & Reimers. The plaintiff claimed the right of possession originally under a general ownership, but, after introducing his testimony in the county court, he was permitted to amend, and allege a special ownership under a chattel mortgage. The county court found for plaintiff on his claim of special ownership, and the cause was appealed to the district court, and plaintiff filed a new petition, alleging a special ownership only. On this petition a trial was had in the district court, judgment found for plaintiff, and defendants brought error proceedings to this court (Suckstorf v. Butterfield, 54 Neb. 757, 74 N. W. 1076), where the judgment was reversed, and the cause remanded, because of the rejection of material testimony offered by defendants, tending to show that plaintiff's title was general, and not special, as he had pleaded it. When the cause was remanded, plaintiff asked leave to amend his petition, to set up the facts connected with his claim of the right of possession of the cattle in dispute. It seems that plaintiff has been in doubt at all times as to whether he was the general owner of the stock, or was only entitled to its possession as mortgagee. This doubt arose from the fact that, in the first instance, plaintiff took a mortgage on the cattle securing a bona fide indebtedness from the then owner of the stock. After he had taken his mortgage, and proceeded to locate his cattle, he found that they had been sold to a third party, under an agister's lien for their feeding. Plaintiff thereupon redeemed from the sale under the agister's lien, and appears to have always had a doubt as to whether this sale and his redemption from it conveyed the absolute title in the stock to him, or whether he only held them by virtue of his mortgage. The district court permitted this amendment over defendants' objection. The cause proceeded again to trial, and plaintiff had judgment, and defendants again bring error to this court.

The only question seriously urged is that the court erred in permitting plaintiff to amend his petition by alleging a general, instead of a special, ownership, and that the petition on which the cause of action was tried was such a material change of issues as to start the statute running from the time the amended pleading was filed. The gist of an action in replevin is the question of the right of the possession of the property in

¶ 2. See Appeal and Error, vol. 3, Cent. Dig. § 3309; Pleading, vol. 39, Cent. Dig. § 626.

Digitized by Google

controversy at the commencement of the suit. While it is necessary that the petition should show whether the plaintiff claims a special or a general ownership in the goods replevied, yet it is uniformly held by this court that a petition and affidavit in replevin may be amended by alleging a special, instead of a general, ownership in the property, or vice versa, and that an amendment, when so made, relates back to the inception of the cause; the finding of an amendment being but the continuance of the original cause, and not the commencement of a new action. Hudelson v. Bank, 56 Neb. 247, 76 N. W. 570; Weich v. Milliken, 57 Neb. 86, 77 N. W. 363; Tackaberry v. Gilmore, 57 Neb. 450, 78 N. W. 32. This view of the case disposes of both the right of the court to permit the amendment, and of the contention that the statute of limitations was put in operation by filing the amended petition.

The only other complaint urged is that the court should have prescribed terms before permitting plaintiff to file his amended petition. The record shows that the court said that he would reserve the question of terms until the issues were made, and the cause finally disposed of. It also appears that a motion to retax costs in the lower court is pending; consequently, the question of terms on which the amendment should be permitted is still an open one in the district court. We might also add that this is a question, in any event, that rests in the sound discretion of the trial court.

It is therefore recommended that the judgment of the district court be affirmed.

HASTINGS and AMES, CC., concur.

PER CURIAM. The conclusions reached by the Commissioners are approved, and, it appearing that the adoption of the recommendations made will result in a right decision of the cause, it is ordered that the judgment of the district court be affirmed.

BANKERS' BUILDING & LOAN ASS'N v. WILLIAMS et al.

(Supreme Court of Nebraska. Sept. 17, 1903.)

MECHANIC'S LIEN—QUESTIONS OF FACT.

1. Whether a claim on which a mechanic's lien was based was sold to another by the contractor prior to his perfecting such lien, and whether the last work on the building was done for the sole purpose of extending the time for filing a lien, or was performed in good faith under the agreement for the erection of the structure and to complete the contract according to its terms, are purely questions of fact.

2. Evidence examined, and *held*, that it is amply sufficient to sustain the findings and decree of the trial court on these questions.

Commissioners' Opinion. Department No. 2. Appeal from District Court, Douglas County; Read, Judge.

"Not to be officially reported."

Suit by the Bankers' Building & Loan Association against Emma R. Williams and others. Judgment for defendants, and plaintiff appeals. Affirmed.

Crane & Boucher, for plaintiff in error. Baldrige & De Bord, for defendants in error.

BARNES, C. On September 4, 1901, the Bradford-Kinsler Lumber Company, appellee herein, filed its petition in the district court of Douglas county, praying for a foreclosure of a mechanic's lien on lot 8, block 7, Logan Place addition to South Omaha, which it alleged had been assigned to it by one George W. Briggs. The Bankers' Building & Loan Association, appellant herein, was made a party defendant in that suit. On September 11, 1901, the appellant filed a petition in the same court, praying for the foreclosure of its mortgage on the same property, and made the appellee a party defendant. Each party filed an answer and cross-petition in the case in which it had been made a defendant, setting up its claim, and praying that the same be decreed to be a lien prior to that of the other party. Afterwards, by consent of the parties and the order of the court, the two actions were consolidated. There was a trial to the court, and the appellee the Bradford-Kinsler Lumber Company was decreed to have a first lien for the sum of $109.20 and a foreclosure of the mechanic's lien described in its petition; and the appellant was decreed to have a second lien on the premises for the sum of $685.04 and the foreclosure of its mortgage. The premises were ordered sold to satisfy these amounts, and the case comes here on appeal by the Bankers' Building & Loan Association.

The only question in the case is whether or not the evidence is sufficient to sustain the findings and judgment of the trial court. It appears that one B. A. Page was the owner of the premises described above, and that in July or August, 1899, he made a verbal contract with one George W. Briggs for the erection of a house thereon, for which he was to pay $635; that Briggs commenced the erection of the house some time in September, and had it so far finished on the 5th of November following that Page, with his family, moved into it, and from that time on occupied it as a family residence. At that time the building was not completed according to the contract, but nearly all the work uncompleted was done during that month. Some time in the winter following the parties got together, and agreed on the amount due on the contract, and it is claimed by the appellant that a duebill was given by Page to Briggs for the balance of the contract price, amounting to $95.95; and it is further claimed that this duebill was assigned or turned over to the appellee before the mechanic's lien in question herein was perfected. An examination of the evidence, however, fails to disclose the existence of a duebill. A document was produced, however, in the form of a half sheet of ruled note paper, covered by figures on both sides, and the only intelligible

Digitized by Google

thing about it is the following statement: "Bal. due $95.95 Briggs." This instrument certainly falls short of being a duebill, and it could in no manner affect the right of the contractor to perfect a mechanic's lien on the premises. It further appears from the evidence that when this paper was prepared—which is sometimes called an account stated and sometimes a duebill, by the appellant—Briggs had not completed his work on the building according to the terms of the contract. It is stated by him that it was agreed between himself and Page that at a later date he should return, and complete the work. This Page does not deny. His testimony is that he does not remember about it, but will not testify that such was not the agreement. It further appears that on the 2d day of August, 1900, Briggs went to the premises, and completed the work—put stops and a lock on the basement door; and that Page knew of the fact, and while the work was being done they talked about the matter, Briggs saying to Page, who was a friend and neighbor, "I have stopped the holes that you were hollering about," and in reply Page said, "I have not hollered very much, have I, George?" Briggs thereupon went to the office of the appellee, and Mr. Bradford made out a mechanic's lien for him in due form, which he signed and verified before a notary public; that he thereupon delivered the lien so prepared to Bradford, who testified that he filed it for and on behalf of Briggs. It further appears from the testimony of Bradford, which is not disputed, and from the written assignment of the lien introduced in evidence, that it was assigned to the appellee in April, 1901, in part payment of, or to be applied on, an account which Briggs owed to the appellee. Appellant insists that the claim was assigned by Briggs to the appellee before the lien was made out and filed for record in the office of the register of deeds. The court, on consideration of the evidence, found otherwise. As we have stated before, the written assignment accompanying the mechanic's lien shows on its face that it was made in April, 1901—at least eight months after the lien was perfected. Bradford testifies that the assignment was actually made at that time, and that when Briggs delivered the mechanic's lien to him in August, 1900, after he had signed and verified it, such delivery was for the purpose of having it filed for record, and that he had it recorded for and on behalf of Briggs. This evidence is not disputed by any one, and we think it was sufficient to justify the trial court in its finding on that question.

It is next contended that the mechanic's lien was not perfected and filed in the office of the register of deeds within four months after the completion of the contract, as required by law. We have carefully examined the evidence on that question. It appears that when Page moved into the house Briggs had not yet completed his contract; that the first story was mostly completed, but the basement was not finished. Briggs testified that after the settlement Page asked him to come out to his house and put the stops on the cellar door. In answer to a question he said: "Well, at the time I settled with him I agreed to come up and finish up. Page and I live neighbors, and every once in a while he would speak about it. Q. At the time you left the house in November, was it agreed then that you should come back and complete the house? A. I told Mr. Page that I would come back and do that work for him; yes, sir. Q. When you went back, was it in pursuance to that agreement? A. Yes, sir. Q. So that the house was not complete in November, at that time this work was not done? A. This work was done to complete the house. The house was not complete until these stops and that other work was done. Q. State whether or not Page called your attention to that fact from time to time, and asked you to come up and do the work? A. Mr. Page called my attention to it more than once." With relation to this work Page himself testified as follows: "Q. Now, at that time, it is a fact, is it not, Mr. Page, that there was certain things to be done with relation to fixing the lock, and fixing the doors that had not been completed? A. There was, perhaps, things that I originally expected to be done in the basement. Q. And these things were not finished at the time when you say you had a settlement with him? A. No, sir; they were not. Q. And they were never finished until he went back there in August? A. He went back there in August, and put the lock and stops on the door. Q. They were never finished until that time? A. That is the time he did it. Q. Is it not a fact that when this settlement was made that you talked with Mr. Briggs about his coming back and fixing this work, just as he has testified? Was there not some talk of that kind? A. I don't remember it. There might have been. Q. There might have been, but you do not remember it? A. I don't remember it. Q. But you don't say that the talk was not had? A. No, sir." The authorities are numerous in which it is held that one cannot perform a slight amount of work on a building already completed a long time after such completion, and thus lay the foundation for the perfection of a mechanic's lien, which otherwise would have been lost by lapse of time; while, on the other hand, the authorities hold that if, in truth and in fact, the building was not completed, and that the work done, though slight in amount, was performed under the contract and for the purpose of its completion, the time for perfecting a lien dates from the time such work was done. The question in this case seems to be purely one of fact. The case was tried before the district court on oral evidence. The witnesses being present before the judge, who had an opportunity to see them, to observe their demeanor upon the stand, he was

in a much better situation to determine the truth of the matter in controversy than is a court of review. We are unable to say that the finding of the trial court that the lien was perfected within four months after the contract was finally completed is not amply supported by the evidence. This being true, we ought not to disturb the findings and judgment of the trial court.

It seems that the case was fairly tried. We find no error in the record, and we recommend that the judgment of the district court be affirmed.

ALBERT, C., concurs.

PER CURIAM. The conclusions reached by the Commissioners are approved, and, it appearing that the adoption of the recommendations made will result in a right decision of the cause, it is ordered that the judgment of the district court be affirmed.

CIZEK v. CIZEK.

(Supreme Court of Nebraska. Sept. 17, 1903.)

JUDGMENT — COLLATERAL ATTACK — HOMESTEAD—QUIETING TITLE—DIVORCE—PROPERTY RIGHTS.

1. Where the court had jurisdiction of the parties and of the subject-matter, and such subject-matter was brought before it by the pleadings, its decree is not open to collateral attack, although the jurisdiction may have been exercised and the subject-matter dealt with erroneously or irregularly.

2. In case the pleadings are sufficient to bring the subject-matter before the court, the decree may not be attacked collaterally merely for want of findings. Such defect goes no further than to render the decree irregular or erroneous.

3. The district court has the power to quiet the title to a homestead in one of the spouses without the concurrence of the other.

4. After decree of divorce, the husband has no right of possession in the separate property of the wife, occupied as a homestead while the marriage relation subsisted.

(Syllabus by the Court.)

Commissioners' Opinion. Department No. 3. Error to District Court, Lancaster County; Cornish, Judge.

Action by Anna Cizek against Michael Cizek. Judgment for plaintiff, and defendant brings error. Affirmed.

Talbot & Allen, for plaintiff in error. J. E. Philpott, for defendant in error.

POUND, C. Michael Cizek, hereinafter styled the defendant, brought suit for divorce against Anna Cizek, hereinafter referred to as the plaintiff. The latter filed a cross-petition, praying that she be granted a divorce, alleging certain facts evidently intended as a claim that the property in controversy in the present cause had been purchased with her money, and was, in justice and equity, her separate property, held in trust for her by her husband, and seeking to have the title thereto quieted in her, and an award of alimony. Defendant failed to comply with an order for temporary alimony, and upon hearing plaintiff was granted a divorce. The decree further provided that, "by consent of parties being made thereto in open court," the defendant should convey the property in controversy to plaintiff, subject to a lien of $250 awarded defendant, to be evidenced by a mortgage, which plaintiff was directed to execute: the decree to stand in lieu of such conveyance and mortgage in default of compliance. No appeal was taken, and the decree remains in full force. The present proceeding was brought by the plaintiff to obtain possession of the property. A verdict in her favor was directed in the district court, and error is prosecuted in this court.

It is contended on behalf of the defendant that the consent of his counsel was wholly without his knowledge or authority, and that the decree, so far as it relates to the property in controversy, is void, and open to collateral attack. There can be no doubt that if the court attempted to award alimony out of particular property, or to charge the award upon particular property, instead of leaving it to operate as a general lien, its action was irregular and erroneous, and subject to correction upon review. Swansen v. Swansen, 12 Neb. 210, 10 N. W. 713; Brotherton v. Brotherton, 14 Neb. 186, 15 N. W. 347; Nygren v. Nygren, 42 Neb. 408, 60 N. W. 885. But where the court had jurisdiction of the parties and of the subject-matter, and such subject-matter was brought before it by the pleadings, its decree is not open to collateral attack, although the jurisdiction may have been exercised and the subject-matter dealt with erroneously or irregularly. Hilton v. Bachman, 24 Neb. 490, 39 N. W. 419; Hough v. Stover, 46 Neb. 588, 65 N. W. 189. All parties were before the court by their pleadings. The plaintiff alleged that the property in question was in equity her separate estate, and was held in trust for her by her husband. If so, the court had power to enforce the trust. Bartlett v. Bartlett, 15 Neb. 593, 19 N. W. 691. Whether any such presumption as that which exists where a husband purchases property, and places the title in his wife's name, arises where the property is purchased with the wife's money, and the conveyance runs to the husband, we need not consider. In any event, the presumption may be overcome by clear and convincing evidence of a trust (Doane v. Dunham [Neb.] 89 N. W. 640), and we must assume that such evidence was before the court (Hilton v. Bachman, supra). The mere fact that the decree contains no express finding upon the issue as to a trust raised in the cross-petition is not material. In case the pleadings are sufficient to bring the subject-matter before the court, the decree may not be attacked collaterally merely for want of findings. Such defect goes no further than to

¶ 4. See Divorce, vol. 17, Cent. Dig. § 825.

Digitized by Google

render the decree irregular or erroneous. State v. Duncan, 37 Neb. 631, 56 N. W. 214.

Counsel contend, further, that the property in question was the homestead of the parties, and hence, as neither could convey without the concurrence of the other, the court could not by its decree transfer the title from the one to the other without the other's consent. But it is well settled that a conveyance of the homestead from the one spouse to the other does not require execution and acknowledgment by both. Furrow v. Athey, 21 Neb. 671, 33 N. W. 208, 59 Am. Rep. 867. There is, in substance, no conveyance or incumbrance of the homestead in such a case. The reversion only is affected. The homestead interests of all parties are exactly as they were before. As the reversion is a valuable estate, and it is just and right that it should pass to the heirs or devisees of the spouse from whose estate in truth and fact the homestead was selected, there is every reason why a court of equity should interfere and should enforce the trust in such cases. When the court had determined the title in the plaintiff, defendant's rights in the property were those of homestead only, depending upon the relation of husband and wife between the parties. After decree of divorce, he had no right of possession in the wife's separate property merely because such property was occupied as a homestead while the marriage relation subsisted. Klamp v. Klamp, 58 Neb. 748, 79 N. W. 735.

It is therefore recommended that the judgment be affirmed.

DUFFIE, C., concurs.

PER CURIAM. For the reasons stated in the foregoing opinion, the judgment of the district court is affirmed.

FIGG v. HANGER et al.

(Supreme Court of Nebraska. Sept. 17, 1903.)

MALICIOUS PROSECUTION—PROBABLE CAUSE —FINDING OF INSANITY.

1. In an action for malicious prosecution, if there is sufficient in undisputed evidence to show probable cause, the trial court should direct a verdict for the defendant, although some of the facts bearing on that issue may be in dispute.

2. A finding by commissioners of insanity that a person brought before them in insane is prima facie evidence of probable cause for the proceeding, although not conclusive.

3. While the plaintiff is not restricted to a direct attack, as, for instance, proof of fraud, collusion, or perjury, but may establish want of probable cause by any form of competent and sufficient proof, the presumption arising from the finding of the commissioners in such a case must be overcome by evidence sufficient to destroy its probative force.

Commissioners' Opinion. Department No. 3. Error to District Court, Douglas County; Fawcett, Judge.

"Not to be officially reported."

Action by Sarah C. Figg against John P. Hanger and others. Judgment for defendants, and plaintiff brings error. Affirmed.

E. S. Nickerson and Geo. A. Magney, for plaintiff in error. Wright & Stout, for defendants in error.

POUND, C. Mrs. Figg was brought before the commissioners of insanity of Sarpy county at the instance of the defendants, and was adjudged "insane on the subject of religion" after a protracted hearing. She was afterwards released by the district court in habeas corpus proceedings. This action is brought to recover damages for malicious prosecution. The trial court directed a verdict for the defendants. The testimony is voluminous, and a great deal of time has been required to read it. Without going into details, it shows that no little bitterness existed between the parties as a result of Mrs. Figg's religious views, and the methods by which she gave them utterance. So far as the question of malice is concerned, we think there was sufficient to go to the jury. But we think, also, that the trial court was right in directing a verdict upon the ground that there was no sufficient proof of want of probable cause. In general, the facts being shown, probable cause is a question for the court. Maynard v. Sigman (Neb.) 91 N. W. 576. If there is sufficient in undisputed evidence to show probable cause, the trial court should direct a verdict for the defendant, although some of the facts bearing on that issue may be in dispute. Bechel v. Pacific Express Co. (Neb.) 91 N. W. 853. There is some dispute as to the sayings and doings of Mrs. Figg on particular occasions. But, conceding all that her testimony shows on these controverted points, there remains a mass of undisputed testimony from which it appears clearly that her speech and conduct, when any matter of religion was raised, were violent and extravagant beyond the usual course of eccentricity. Moreover, great weight must be given to the determination of the commissioners of insanity. Undoubtedly, their finding is not conclusive, but it is prima facie evidence of probable cause. The plaintiff is not to be restricted to a direct attack upon this determination, as, for instance, proof of fraud, collusion, or perjury, but may establish want of probable cause by any form of competent and sufficient proof. Bechel v. Pacific Express Co., supra. Nevertheless, the presumption arising from the finding of the commissioners in such a case must be overcome by evidence sufficient to destroy its probative force. Maynard v. Sigman, supra; Nehr v. Dobbs, 47 Neb. 863, 66 N. W. 864. All that is shown is that some things were testified to before the board which Mrs. Figg and her family dispute. Admitting that the witnesses were in error on these points, we do not think the finding would have been affected. The circumstances were

Digitized by Google

mere details in a mass of evidence, which undoubtedly moved the board from its whole tenor, rather than by the force of any particular piece.

We therefore recommend that the judgment be affirmed.

DUFFIE and KIRKPATRICK, CC., concur.

PER CURIAM. The conclusions reached by the Commissioners are approved, and, it appearing that the adoption of the recommendations made will result in a right decision of the cause, it is ordered that the judgment of the district court be affirmed.

SPORER v. McDERMOTT et al.

(Supreme Court of Nebraska. Sept. 17, 1903.)

Dissenting opinion. For majority opinion, see 96 N. W. 232.

HOLCOMB, J. The majority opinion in this case provides an effectual landlords' lien law, in the absence of statutory authority, and, as I view the former utterances of this court, runs counter to a long line of decisions, beginning with Lanphere v. Lowe, 3 Neb. 131. Of course, it can make no difference with the tenant whether provisions for a lien in favor of his landlord for rents due are incorporated in his contract of lease or become a part of it by virtue of a statutory enactment. In either event all of his crops, even though produced in the future, are pledged for the payment of rent, and he can neither use nor dispose of the smallest part thereof lawfully until the demands of his landlord are satisfied. If all the prior decisions of this court are to be thus brushed aside, it seems to me they should be squarely repudiated, so that there may be no ground for confusion on the part of the bench and bar or of the laity.

It is said in the opinion formulated by the Commissioner, which is adopted by a majority of the court, that an action for specific performance for the purpose of establishing a lien on property not in esse at the time of the execution of the contract is held on good authority to be maintainable in a court of equity, citing as authority in support thereof Pomeroy's Equity Jurisprudence. This summary disposition of the question involves no great amount of labor, and possibly is the best that can be made of a very troublesome proposition. But it is to be noted that in almost every decision of this court on the subject a conflict in the authorities is recognized. As is said in Cole v. Kerr, 19 Neb. 553, 26 N. W. 598: "There is, to say the least of it, great confusion of the authorities on the point being considered." In the language of another who has wrestled with the question: "One might write a volume, if inclined to review all of the adjudged cases on the subject." New Lincoln Hotel Co. v. Shears, 57 Neb. 478–483, 78 N. W. 25, 26, 43 L. R. A. 588, 73 Am. St. Rep. 524. Or, as stated by another: "The question thus presented is one upon which the authorities are by no means harmonious." Steele v. Ashenfelter, 40 Neb. 770, 59 N. W. 361, 42 Am. St. Rep. 694. My own views of the subject are stated at some length, with numerous citations of authorities, in Brown v. Neilson, 61 Neb. 765, 86 N. W. 498, 54 L. R. A. 328, 87 Am. St. Rep. 525. The mere assertion in the majority opinion that the authorities sanction the enforcing of an equitable lien on property mortgaged or agreed to be mortgaged, which at the time is not in existence, in view of the conflict of authority, and in the face of the doctrine accepted and adopted by our own prior decisions, is neither satisfactory nor convincing to me.

An attempt is made in the opinion to distinguish between the case at bar and the case of the Battle Creek Valley Bank v. First National Bank, 62 Neb. 825, 88 N. W. 145, 56 L. R. A. 124, which is too subtle for my comprehension. The two cases are in sharp conflict, and the attempted distinction appears unsound both on principle and in logic. On principle, what distinction can there be drawn between an executory contract to give a mortgage on property not in esse and provisions in a mortgage in form which, by its terms, undertakes to pledge property to be acquired in the future? Both are, so far as such future acquired property is concerned, at least, executory contracts, resting for a right of enforcement upon the same legal and equitable principles; and all the authorities I have examined so regard and treat them. In those jurisdictions where such contracts are specifically enforced, both are held to create no legal interest in the property attempted to be incumbered, and that an equitable lien only attaches when the property comes into existence, which will be specifically enforced by a court of equity. The form or particular nature of the agreement which it is intended shall create a lien, say the text-writers, is not material, for equity looks at the final intent and purpose, rather than at the form; and an equitable lien will follow where it appears that such was the intent of the parties. The intent to give a security being clear, equity will treat the instrument as an executory agreement for such security. In Apperson & Co. v. Moore, 30 Ark. 56, 21 Am. Rep. 170, cited in the majority opinion, are collated a number of authorities, all of which recognize a mortgage of property not in esse and an agreement to mortgage such property as being controlled by the same equitable principles. If no reasonable distinction can be drawn between a mortgage of property not in existence and an agreement to give such a mortgage—which I contend cannot—then the majority opinion is in conflict with the

Digitized by Google

very case it seeks to distinguish and approve. It should be borne in mind that under our reformed system of administering justice the forms between actions at law and suits in equity are abolished. Under the blending of the two systems, it becomes immaterial what the form of the action is. Relief is to be administered, whether legal or equitable, according to the facts as disclosed by the pleadings and the evidence. The distinction, therefore, which is sought to be made, can have no place in our practice. Whatever relief either of the parties is entitled to should be awarded regardless of the distinctions formerly existing between actions at law and proceedings in equity. Steele v. Ashenfelter, supra; Alter et al. v. Bank of Stockham, 53 Neb. 223, 73 N. W. 667.

Again, it is stated in the opinion that an equitable action to enforce a lien on such property by virtue of an executory contract is itself brought to supply and obtain performance of "the intervening act" which is necessary to convert a mere contract right against the promisor into an actual lien against the thing itself. My conception of the true rule governing the rights of parties under such an agreement is and has been altogether different. I had supposed that "the intervening act" spoken of by the authorities regarding such executory contracts to make them effective was the voluntary act of the promisor, the promisee being at most, until such intervening act took place, a mere licensee. It had not occurred to me that a coercive decree of a court of equity could supply the place of this intervening act, nor am I yet convinced that it rightfully can. Lord Bacon's maxim, from which the rule is deduced, is to the effect that, when the grant of a future interest is invalid, yet a declaration precedent may be made which will take effect on the intervention of some new act. The "new act" must, however, in all cases, come from the grantor. In Broom's Legal Maxims, 500, it is said: "The powers contained in the indentures to seize future crops if unexecuted would be of no avail against an execution levied as giving no legal or equitable title to any specific crops, yet, if the power be subsequently executed by the grantee taking possession of the then growing crops, the seizure may be good as against an execution afterwards levied; for the act done by the grantor is sufficient to give effect to the antecedent declaration within the scope and meaning of Lord Bacon's maxim." The authorities also hold that the license contained in a mortgage conveying future-acquired property from which the right to take possession of it after it comes into existence arises, and which, when done, satisfies the rule as to the performance of the new intervening act, is revocable at the will of the grantor, and cannot be executed against his will. Cheneweth v. Tenney, 10 Wis. 397; Jones on Chattel Mortgages (3d Ed.) § 165. If the license is revocable at the will of the grantor, if the intervening act must be voluntarily performed by him, I cannot understand how it may properly be said he may be coerced in doing that which is to be done voluntarily, or that he may be denied the right to at will revoke a license by which the same act may be accomplished. It is quite true that if this court should repudiate all that it has heretofore said on the subject, and hold to the doctrine, as is held in some jurisdictions, that the mortgaging of property not in existence or agreeing to mortgage the same creates an equitable lien specifically enforceable in a court of equity when the property comes into being, then the opinion is right; but I maintain that in this state, according to all our decisions, such contracts create neither a legal nor equitable lien, until, as the books say, there has been "a new intervening act," and consequently the grantee in such an instrument has no standing either in a court of law or of equity. Brown v. Neilson, supra, and the authorities therein cited.

The right to enforce the lien in the case at bar on the crops of the grantor, which were planted and grown long after the execution of the instrument which is the basis of the action, can be justified only on the ground that the written instrument of lease operated as a reservation of title or an interest therein in favor of the landlord of the demised premises, which can be defeated only by a payment of the rent due; and this, I understand, is the view entertained by my associates, and which led them to adopt the opinion prepared by the Commissioner. I readily concede that a landlord may retain and reserve to himself an interest in or title to all the crops grown on the premises which he has leased by suitable stipulations in a lease contract with his tenant. He may reserve to himself a third or a half of the crop for his share of the rents, and the title thereto would be his absolutely to the exclusion of any right which might be asserted by the tenant; or he might retain an interest in and title to the crops until the rental was paid by making an agreement in the nature of a conditional sale. But, as I construe the instrument which is made the basis of the present action, nothing of this kind was attempted. What was done was to lease to the tenant the premises for a cash rental, payable at a stipulated time each year, to be evidenced by a note, which was to be secured by a chattel mortgage on all the crops planted and sown on the leased land. This I construe to be simply an agreement for the lease of the premises at a cash rental, with the further agreement that the tenant, to secure the rental due each year, will mortgage property which at the time was not in existence, either actually or potentially, and for that reason the contract to mortgage created neither a legal nor equitable lien on the property agreed to be mortgaged after it came into existence. The case at bar is to be

Digitized by Google

distinguished from Brown v. Neilson, supra, for in the latter case there was no attempt to mortgage or to agree to mortgage in specie the crops which were raised on the demised premises, but simply a provision that all property which should be brought on the premises during the existence of the lease should be held as security for the amount to be paid as rental. There is nothing in that contract indicating an intention to reserve to the landlord any interest whatever in the crops grown on the demised premises. The true reason and sound doctrine under which the landlord is permitted to hold the crops grown on the leased premises for the rents due is stated quite accurately and succinctly in De Vaughn v. Howell (Ga.) 9 S. E. 173, 14 Am. St. Rep. 162. Says the court: "Here was a landlord who made a rent contract with his tenant, and the tenant not only agreed to sell the crop, but went further, and agreed that the title to all the crops made on the farm should remain in the landlord until the landlord was fully paid for his rent and all advances. * * * The reasoning upon which our decisions go is that, the owner of the land, being also the owner of the fruits or products of it, in parting with the use of it to another may make such conditions and reservations in relation to the land itself, or the products grown from it, as he chooses, instead of parting with the full right. The principle is the same as that upon which conditional sales of personal property are upheld." I find nothing in the leasehold agreement in the case at bar from which it seems fairly inferable that the landlord, Sporer, reserved any interest in the crops grown on the land he leased to McDermott, or title thereto; and certainly there is an entire absence of any element of a conditional sale of personal property. The majority opinion appears to me to be in direct and irreconcilable conflict with the case of the New Lincoln Hotel Co. v. Shears, supra. It is to be observed that the lease of the hotel in the case referred to contained a provision that it should operate as a lien on all the personal property of the lessee which should be placed in the hotel on the leased premises to secure payment of rent, whether then acquired or not. The lessees afterwards mortgaged the property subject to this attempted lien, but with notice to the mortgagees of the provisions contained in the lease. It was there held that the mortgagees were entitled to a superior lien, and that the question of notice in no manner affected their rights. The same rule should, I think, be applied in the present case. I am of the opinion that Sporer, the landlord, by his agreement, obtained neither a legal nor an equitable lien or interest in the crops raised in the future on the demised premises, nor was there any reservation, interest, or title therein in the landlord, and that the judgment creditor who had levied on the property was entitled to it as against the former, and the judgment of the district court should, therefore, be affirmed. Hence I dissent.

TIERNAN v. MILLER & LEITH.

(Supreme Court of Nebraska. Sept. 17, 1903.)

COURTS—JURISDICTION—HOMESTEAD ENTRIES—INJUNCTION—POSSESSION.

1. The courts of this state have no jurisdiction to try and determine the validity of homestead entries duly allowed by the officers of the Land Department of the general government.

2. A party entering public lands as a homestead is entitled to the possession thereof, and cannot be enjoined from exercising his right of possession by one who, without right, held a prior possession.

3. A lease of the land by the homesteader gives the lessee a like right of possession.

(Syllabus by the Court.)

Commissioners' Opinion. Department No. 3. Appeal from District Court, Box Butte County; Harrington, Judge.

Suit by Charles Tiernan against Miller & Leith. Judgment for defendants, and plaintiff appeals. Affirmed.

R. C. Noleman, for appellant. Wm. Mitchell, for appellees.

DUFFIE, C. This action was brought by the appellant praying an injunction against the appellees enjoining them from asserting any exclusive control over numerous tracts of land claimed by the appellant to be government land, and from fencing the same or from driving the stock of plaintiff from said land. As we understand the record, 29 homestead entries were made upon the lands in question, and duplicate receipts were issued to the parties by the receiver of the United States Land Office at Alliance. Miller & Leith claim to have leased the lands embraced in most of these homestead entries, and are about to fence in the same, and take exclusive possession thereof. It is alleged that these entries are fraudulent; that Miller & Leith furnished the money to pay the land-office fees, and also paid the entrymen certain sums for making said entries, which it is charged were made for the benefit of Miller & Leith; that the entries are a fraud upon the government, and were made for the sole purpose of giving Miller & Leith a claim of right to the lands, under which they are about to take exclusive possession thereof, and to exclude the appellant therefrom, he having occupied a large portion of the lands with his herd of cattle for many years prior to the commencement of this action. The defendants filed a demurrer to the petition, which was overruled; Judge Harrington sitting in the case. Thereupon defendants filed a motion to dissolve the temporary injunction issued in the case, and upon a hearing the motion to dissolve was overruled, and the temporary injunction continued. The hearing on this motion was also before Judge Harrington. At the next regular term of court, at which

Digitized by Google

Judge Westover presided, the plaintiff and appellant obtained leave to file a supplemental petition, and thereupon a demurrer was interposed to the petition and supplemental petition, which was sustained by the court, and, the plaintiff refusing to amend or further plead, the injunction was dissolved, and the plaintiff's petition dismissed. From this order the plaintiff has appealed to this court. The sufficiency of the petition being questioned both by demurrer and on motion to dissolve the temporary injunction issued thereon, and held sufficient by Judge Harrington, it is now insisted that its sufficiency must be accepted as the law of the case, and that Judge Westover on the final trial was bound by these rulings.

In Marvin v. Weider, 31 Neb. 774, 48 N. W. 825, it was held that, where the sufficiency of the petition was put in question by a demurrer interposed thereto, and the demurrer overruled, and leave given to the defendant to answer, which he did, it was error for another judge of the same district to sustain an objection to the introduction of any evidence on the ground that the petition failed to state a cause of action. In Kleckner v. Turk, 45 Neb. 176, 63 N. W. 469, a demurrer was interposed to a petition and overruled, whereupon the defendant filed answer. The trial was had before another judge of the same district, and after the reception of the evidence the judge instructed the jury to return a verdict for the defendant for the reason that the pleadings, evidence, and law would not sustain a different verdict. It was held that no error was committed, the reason given being that another element entered into the consideration of the case, namely, the evidence. In Perry v. Baker, 61 Neb. 841, 86 N. W. 692, it was held that a judgment for defendant upon sufficient pleadings and evidence will not be reversed because another judge of the same court had, before the trial, sustained a general demurrer to the answer, the answer having been amended by leave of court after ruling on the demurrer; and this is the rule although no evidence is offered on the trial sustaining the allegation brought into the answer by such amendment. In the body of the opinion it is said: "If a judge makes an erroneous ruling, and afterwards, in the trial of the case, with more exhaustive investigation of the question, finds his first ruling is wrong, he should not be bound by it. The principle of res adjudicata does not apply. The first ruling does not become the law of the case, so as to bind the court in the further proceedings therein. The court remains the same whether the personnel changes or not. So far as a different rule was announced in Marvin v. Weider, supra, that case ought to be overruled." We conclude, therefore, from an examination of these authorities, that where there are two or more judges of a district, and one of them has passed upon the sufficiency of the petition or answer, his ruling does not become the law of the case, and bind another, who may be called upon to try the case on its merits; and especially is this the case where, as here, the pleadings have been changed, and other elements have entered into the case.

This brings us to a consideration of the case on its merits. The facts set forth in the plaintiff's petition, and largely supported by his affidavits offered in resistance of the motion to dissolve the injunction, present a case which, if offered to the proper tribunal, would undoubtedly justify it in holding that the homestead entries made upon the land in controversy were fraudulent in character, and demand their cancellation. The trouble is, however, that no court, either state or federal, has jurisdiction at this time to investigate this question, or pronounce judgment thereon. As said in Reaves v. Oliver (Okl.) 41 Pac. 353: "The title is yet in the United States, and the questions affecting the rights of the several parties to acquire title is for the officers of the Land Department to deal with. The courts will not interfere with or attempt to determine any question involved before the Land Department while the title is yet in the United States. The courts will only deal with the question of possession, and in order to do this will look into the record sufficiently to advise itself as to the true status of the parties in that department. Whenever the facts are undisputed, the courts will apply the law to the status of the parties as justice may require." In this case it is shown that the land in controversy has been entered under the homestead act, and the land officers, in allowing the homestead entry, are required to pass upon the qualifications of the entrymen, and the courts will not inquire into or pass upon any question of fact properly belonging to the department while such matters are pending therein. The Congress of the United States has placed the disposal of the public lands with the Secretary of the Interior, under rules and regulations to be established by his department. Until the title has passed from the government, the courts will not interfere in the administration of the law by the Land Department. In Marquez v. Frisbie, 101 U. S. 475, 25 L. Ed. 800, it is said: "We have repeatedly held that the courts will not interfere with the officers of the government while in the discharge of their duties in disposing of the public lands either by injunction or mandamus, and we think it would be quite as objectionable to permit a state court, while such a question was under consideration, and within the control of the Executive Department, to take jurisdiction of the case by reason of their control of the parties concerned, and render decrees in advance of the action of the government which would render its patents a nullity when issued. After the United States has parted with its title, and the individual has become vested with it, the equities on which he holds

Digitized by Google

it may be enforced, but not before." So long as the homestead entries made by the parties mentioned in appellant's petition remain uncanceled by the Land Department of the United States, these parties have a right to the possession of the lands embraced within their homestead entry, and they may lease such lands, or such portion of them as they desire, to third parties. The plaintiff, not having a prior right acquired under some law of the United States, cannot interfere with that possession, or dispute the right of the homestead claimant, except by proceedings in the Land Department, until title has passed from the United States, when the land and the right thereto may become the subject of inquiry in the courts. If the homestead entries in question are fraudulent, the Land Department has not only ample, but exclusive, jurisdiction to deal with that question. If the officers of the Land Department have acted fraudulently in passing upon adverse claims of title to the land, or if they have mistaken the law, and given it to one party where the law, properly construed, would award it to another, then the courts may right the fraud or correct the unlawful holding. As said in Marquez v. Frisbie, supra: "The rules which govern the courts in the effort to correct any error in such decisions has been so repeatedly stated here as to leave no room for doubt or misconstruction. The principle is that the decisions of the officers of the Land Department, made within the scope of their authority, on questions of this kind, are in general conclusive everywhere except when considered by way of appeal within that department, and that as to the facts on which their decision is based the absence of fraud or mistake that decision is conclusive, even in courts of justice, when the title afterward comes in question. But that in this class of cases, as in all others, there exists in the courts of equity the jurisdiction to correct mistakes, to relieve against frauds and impositions, and in cases where it is clear that these officers have, by a mistake of the law, given to one man the land which, on the undisputed facts, belongs to another, to give proper relief." These principles were fully discussed in Smiley v. Sampson, 1 Neb. 56, and Morton v. Green, 2 Neb. 441. There is a class of cases of which the courts take jurisdiction to protect and preserve the possessory rights of parties who have entered upon government land, and who can connect themselves with the land by some color of title or possessory claim or right under some statute of the United States with a view of entering it as a homestead or pre-emption claim. Where two parties claim such right of possession, the courts will interfere to protect the party whose right was first acquired, and while the question of priority between the parties is being determined by the Land Department of the general government. Could the plaintiff in this action show that he was in possession of this land under any claim of homestead or pre-emption, or any other right growing out of our public land laws, the court would protect his possession until the Land Department of the general government examined the case and determined that such possession was subordinate to that of the party seeking to oust him. But the facts in this case are the reverse of what is necessary to give the court jurisdiction. Plaintiff, without claim of right to the land, is seeking to enjoin those who claim under a homestead entry made at the proper land office of the United States from taking possession, and is asking the court to usurp the exclusive jurisdiction of the Land Department by declaring fraudulent and void homestead entries allowed by that department. This the court has not power to do.

The judgment of the district court was right, and we recommend that it be affirmed.

KIRKPATRICK and POUND, CC., concur.

PER CURIAM. For the reasons stated in the foregoing opinion, the judgment of the district court is affirmed.

HOOKER v. CONTINENTAL INS. CO.

(Supreme Court of Nebraska. Sept. 17, 1903.)

INSURANCE—DEFAULT IN PREMIUM—WAIVER—EVIDENCE.

1. The policy sued upon provided for suspension of the insurance during the time any premium note remained overdue and unpaid. A loss occurred while plaintiff was in default for payment of his first premium note. The note named the agent as payee, but was owned by insurer. *Held*, that plaintiff's default, unless waived, suspended his insurance.

2. Plaintiff pleaded a contract for an extension of time in which to pay his matured premium note to a date beyond that of the loss, and also a waiver by receipt of payment after notice of plaintiff's loss under the policy. *Held*, that a verdict against the plaintiff is supported by the evidence.

3. Record examined, and *held* to show no error.

(Syllabus by the Court.)

Commissioners' Opinion. Department No. 2. Error to District Court, Stanton County; Graves, Judge.

Action by Odom Hooker against the Continental Insurance Company. Judgment for defendant, and plaintiff brings error. Affirmed.

W. W. Young and G. A. Eberly, for plaintiff in error. John A. Ehrhardt, for defendant in error.

GLANVILLE, C. Odom Hooker was plaintiff in the court below, and has brought this cause before us on a petition in error, seeking to reverse the judgment of the district court of Stanton county, rendered against him in his action upon an insurance policy

¶ 1. See Insurance, vol. 28, Cent. Dig. § 899.

Digitized by Google

for the value of stock killed by lightning. The parties will be designated herein as "plaintiff" and "defendant," as they stood in the trial court.

Before considering the merits of the case, it is necessary to decide one preliminary question. Plaintiff assigns error for the giving of certain instructions by the court to the jury, and, after filing his petition in error with the record and his briefs, he was met by the contention that the record did not show exceptions to the instructions complained of, whereupon he applied to the district court for an order noting his exceptions. A hearing was had before the trial court, and the court made the following findings and order: "Upon due consideration the court doth find that the allegations and statements in plaintiff's motion and application filed herein are true. The court doth further find that, the plaintiff having failed to make record of his exceptions either by marginal notations in writing upon the original instructions of the court, or by reducing the same to writing and filing the same in said cause, he is not now entitled to the entry of said order nunc pro tunc, and the same is therefore denied and refused." These findings of the court are, in effect, that the plaintiff, at the time of the giving of the instructions in question, then and there duly excepted to each and every one of them, and that by the ruling of the court such exceptions were not allowed to be noted or entered upon the instructions until after the verdict of the jury had been returned. These findings of the court, made a part of its record in the case, are sufficient to entitle the plaintiff to an examination of the instructions complained of; the instructions being "duly excepted to" at the time the same were given to the jury, and the above findings being a sufficient record to show that the exceptions were properly taken. The policy sued upon was issued by the defendant to the plaintiff November 17, 1899, insuring him to the aggregate amount of $1,400 against loss of property by fire or lightning, and in consideration for the policy the plaintiff gave an installment note to the defendant for $44.80, payable in installments of $11.20 annually, without interest, the first installment being due December 1, 1900; and also gave his note for $11.20, without interest, due March 1, 1900, of which the following is a copy:

"$11.20. Stanton, Neb., Nov. 8, 1899.

"For value received, promise to pay to F. A. Frost or order, eleven & $^{20}/_{100}$ Dollars, on or before, the first day of March, 1900, with interest at —— per cent. per annum (being First Payment for Policy of Insurance based upon application made this day to the Continental Insurance Company, of New York.) This note shall not be valid unless said policy is issued by the Company.

"And it is hereby agreed that in case of non-payment of this note at maturity this company shall not be liable for loss during such default and the policy for which this note is given shall lapse until payment is made to this company at its western department in Chicago, Ills., and in the event of non-settlement for time expired, as per terms in contract, the whole amount of note may be declared earned, due and payable, and may be collected by law. This note given to secure payment of a part of the premium for a policy of insurance. In case of loss under said policy this note shall immediately become due and payable, and may be deducted from the amount of said loss. If transferred either before or after maturity, by the company, it is agreed this note shall be subject to all defenses as if owned by the company herein named. Odom Hooker."

This note was not paid at maturity, and while it remained overdue and unpaid the loss in question occurred. The policy sued upon contains the following provisions: "But it is expressly agreed that this company shall not be liable for any loss or damage that may occur to the property herein mentioned, while any promissory note or obligation, or part thereof given for the premium remains past due and unpaid." "The company may collect by suit or otherwise, the premium note or notes, and a receipt from the office of the company must be received by the assured before there can be a revival of the policy, which shall in no event carry the insurance beyond the original term."

The note copied above, although on its face made payable to an agent, is a note given for part of the premium for plaintiff's policy, and by the dealings of the parties, and we think by the pleadings, has been considered and treated as, and in fact that at all times it was, the property of the defendant; and the plaintiff alleges a contract to extend the time of its payment, made with the said Frost, and assented to by defendant, through its agent, and claims payment of the same to the defendant by payment to the said Frost; and we think the note is one a default in payment of which would, under its terms and the terms of the policy, suspend the insurance during the time it remained overdue and unpaid. Plaintiff's attorney took pains to bring out with emphasis upon cross-examination evidence that Frost held this note for collection at the time a contract for extension is claimed to have been made, and at the time the note was paid; and his letter to the defendant under date of July 20, 1900, acknowledged by plaintiff and introduced in evidence, is in part as follows: "I also acknowledge receipt of a letter from your Company bearing date June 23rd, enclosing for me $11.20 which I had paid upon the first installment note given under said policy to your agent, F. A. Frost, at Stanton, Nebraska, who held the same for collection and who collected the same from me with a full knowledge of the destruction of said property by lightning and surrendered said note to

Digitized by Google

me at time of payment. Early of the same week that my property was destroyed by lightning, your agent, Mr. Frost, came to my home in Stanton County for the purpose of collecting this note. I did not have the money at that time to pay the note, and told him that I would haul some hogs to town on Saturday of that week, or the following Monday, for the purpose of paying said note, and he stated to me at the time that it would be all right, and that you would wait upon me until that time. On the following Monday, June 11th, I did as I agreed with Mr. Frost, hauled my hogs to town and paid the note in question after having told him of the destruction of said property by lightning." It seems that the agent, Frost, in company with one Evans, a special agent of the defendant, called on plaintiff at his farm early in June, and urged payment of this note, then three months past due; that the note was not paid, but plaintiff promised to pay it soon; that Sunday morning, June 10th, three of plaintiff's horses were found dead, killed by lightning; that he called on the agent, Frost, Monday evening, and paid the face of this note to him and received the note. There is some conflict in the evidence as to what took place at the interview on the farm. Plaintiff on direct examination stated: "He [Evans] said he came there for the purpose of seeing me about the insurance note to the Continental Insurance Company. I told him I didn't have the money right then to pay it, but, if he would extend the time till Saturday or Monday; and Mr. Evans, or whatever his name is, I can't remember, he said 'All right'; and I went and sold some hogs. I went to Mr. Frost, and told him I'd sold, and I'd pay him the money, and he said that would be all right." On cross-examination he declined to swear that the agent did not tell him his policy would be in abeyance, and that he had no insurance until his note was paid; and when asked, "Now, they said they'd wait till Monday?" he answered, "Wait till Saturday. I told him I'd come and pay it." Both agents say he promised to pay the note Saturday, but deny saying it was all right, or giving any extension of time. Again, plaintiff and one witness insist that plaintiff informed the agent, Frost, of his loss before he paid his note. This is denied by Frost. These are practically all the disputes between the parties as to the facts involved.

Plaintiff contends that his note, overdue at the time of the loss, was given to Frost, and that the defendant company had no interest therein, and that under the holdings of the court in Union Life Insurance Co. v. Parker (Neb.) 92 N. W. 604, and Pythian Life Association v. Preston, 47 Neb. 374, 66 N. W. 445, his policy was not suspended because of the nonpayment of this note. In the case before us no contract allowing this note or the payment represented thereby to become the property of or retained by the agent was pleaded or proved, and the note at all times has been recognized as the property of the defendant. The plaintiff at first swore that he had given the note to the company, though afterwards changed his statement in that regard, and said he had given it to Mr. Frost. It was explained by the agent why his name was inserted in the note. Mr. Frost did not write and issue such policies as plaintiff's, and the application therefor was taken by a traveling agent, Johnson, and he (Frost) took this note in this form, it seems, to show his connection with the matter. In the Parker Case, above referred to, the agent had a right to all of the first payment, and took a note therefor, payable to himself, and sold it, the proceeds belonging to him. The insurer recognized the title of the indorsee, and bought the note after the loss occurred. In the Preston Case, cited, the contract with the agent who took the note, which was unpaid at the time of the loss, provided: "The compensation allowed said party of the second part [the agent] for his services rendered under the terms of this contract shall be 100 per cent. of the membership fee, or advance premium, adopted by the party of the first part, and collected by the party of the second part." It was held "that the association had surrendered the right to any further control or direction of the collection of the fees and advance premiums," and "that, if he [the agent] extended credit, it was not for the company, but for himself." Those cases are easily distinguished from the one before us, and their reasoning does not apply to the facts herein. This case, so far as this element of it is concerned, is governed, we think, by Phœnix Ins. Co. v. Bachelder, 32 Neb. 490, 49 N. W. 217, 29 Am. St. Rep. 443, Id., 39 Neb. 95, 57 N. W. 996, and Home Fire Ins. Co. v. Garbacz, 48 Neb. 827, 67 N. W. 864, and, the jury having found against the plaintiff on the disputed questions of fact, judgment on the verdict will be sustained unless error is found in the instructions or rulings at the trial.

Plaintiff makes special complaint of instructions No. 2 and No. 6, because No. 2 instructs "that the burden is upon the plaintiff, and it is for him to prove every material allegation contained in said petition by a preponderance of the evidence," and No. 6 requires the jury, in order to justify a verdict for plaintiff, to believe "that the horses killed were covered by the policy." He insists that these taken together may have misled the jury to his prejudice, because his petition alleges that the horses killed were owned by him at the time the policy was issued, and the proof shows that they were bought afterwards, and that, while such allegation of ownership was immaterial, yet the jury may not so have understood. There is no merit in this contention. The instruction is correct as given, for the court, by its first instruction, stated the issues by recital of the material allegations, and did not include the al-

Digitized by Google

legation of such ownership; and, furthermore, if plaintiff wanted a more explicit statement of the issues, he should have asked an appropriate instruction for that purpose, which he failed to do. Again, the court, by several other instructions, narrowed the inquiry to the real issue between the parties, and directed a verdict for the plaintiff upon a finding in his favor as to those issues; that is, if the jury found the time of payment of the note involved had been extended to the day when it was paid, or that the forfeiture had been waived by receipt of payment with knowledge of the loss.

Plaintiff contends that the court erred in refusing instructions No. 1 and No. 4 asked by the plaintiff. Instruction No. 4 so asked is somewhat lengthy, and we will not copy the same, but hold that it would have been error for the court to give it for two reasons: First, by this instruction the jury would have been allowed to find for the plaintiff in a greater sum than the insurance upon the property lost. The policy is severable as to the amount of insurance on separate classes of property, and is for $200 on horses, mules, and colts, and this instruction would authorize a verdict for the total value of property lost, which proof shows to be $240. Again, it is to the effect that if the defendant did not at once, upon notice of the loss, and nonpayment of the $11.20 note, cancel the policy, and notify the plaintiff of its forfeiture, and offer to return the installment note in its possession, this would be a waiver of the forfeiture or suspension clause of the policy, and render the defendant liable. That is not the law, as the policy, by the nonpayment of a premium note, was suspended, and not forfeited as a whole, and could be reinstated by payment of premium, notwithstanding a dispute had arisen between insurer and insured as to liability for the loss involved herein. Instruction No. 1 asked by the plaintiff would have been erroneous for the first objection above stated to instruction No. 4; that is, that it would have allowed a recovery in excess of the amount of the insurance. It is also objectionable because it appears to require a verdict for the plaintiff if the time of payment of the note in question had been extended until "June 9th or 11th, and that plaintiff then and there, at the time of the extension, agreed to pay the same on one of said dates." This would have been wrong. An extension of payment to June 9th would not make defendant liable for a loss occurring on June 10th.

There are some assignments of error based upon rulings of the court on admission and rejection of evidence. Without reviewing the record at length on these assignments, we will say we have examined it carefully, and find no error in these records. Plaintiff's cause was fairly submitted to the jury, the evidence sustains the verdict, the verdict and judgment are not contrary to law, and we find no error in the record.

We therefore recommend that the judgment of the district court be affirmed.

ALBERT and BARNES, CC., concur.

PER CURIAM. For the reasons stated in the foregoing opinion, the judgment of the district court is affirmed.

BOGGS v. McEWEN et al.

(Supreme Court of Nebraska. Sept. 17, 1903.)

MORTGAGE—PRIORITIES—MECHANICS' LIENS.

1. One acting in good faith and without negligence, and for a valuable consideration, may safely deal with an apparently and actually unincumbered title, the subject of which is not in adverse possession.

(Syllabus by the Court.)

Commissioners' Opinion. Department No. 1. Appeal from District Court, Dixon County; Graves, Judge.

Action by Rena Boggs against Fred H. McEwen and others. From the judgment, plaintiff appeals. Reversed.

R. M. Dott, F. A. McMaster, and A. E. Hitchcock, for appellant. McCarthy & McCarthy, R. E. Evans, and O. E. Martin, for appellees.

AMES, C. The facts disclosed by the record upon this appeal are substantially undisputed. So far as their recitation is necessary for the decision of the controversy, they are as follows: On and prior to the 1st day of April, 1900, Fred. H. McEwen was and had been occupying a dwelling house and lot in the village of Emerson in this state as the tenant of certain persons named Merten, who were the owners of them in fact and of record. For some two months prior to the date mentioned, he had been negotiating for the purchase of the property, and also, it would seem, to borrow the money with which to pay the purchase price from his sister, the appellant, Mrs. Rena Boggs, who was at Mt. Vernon, S. D., where she resided. At about the date mentioned, he appears to have become convinced that he would be able to perfect the arrangement, and to have begun to procure labor and material from the other parties to the suit, who are mechanic's lien holders, for the reparation of the building. This conduct was begun and continued within the knowledge, but without the authority, direction, or privity of the Mertens. The agreement between him and the Mertens for the sale of the premises was never reduced to writing, and amounted to no more than an oral consent by the latter to sell and convey upon being paid a certain purchase price in cash. On or about the 8th day of May following, one George H. Hasse, a banker at Emerson, received through the mail a certificate of deposit issued by a bank at Mt. Vernon for the sum of $1,080.60, payable to the order of Mrs. Boggs at the expiration of

Digitized by Google

about a month thereafter, and indorsed by her with a direction to the effect that the proceeds thereof should not be used or drawn or paid to the Mertens until they should have conveyed the house and lot to McEwen. Upon receipt of the certificate, Hasse notified McEwen and the Mertens of the fact, and the latter executed a deed of the premises bearing the last-named date, and conveying the premises to McEwen, and delivered it to Hasse, to await the maturity of the certificate, and the consummation of the transaction by the full payment of the purchase price to them. On the 26th of May, shortly before the certificate fell due, Hasse sent it to Mt. Vernon for collection, and within a few days thereafter received, also by mail, payment of it. On the 1st day of June the purchase price was paid to the Mertens, or placed to their credit in the Emerson bank, pursuant to their previous instructions, and McEwen executed and delivered to Hasse his note and a mortgage on the house and lot, payable to Mrs. Boggs, for the amount of money loaned by her, and received the deed for the premises then in the possession of Hasse. The deed and mortgage were then sent through the mails by Hasse to the county seat, Ponca, where they were filed for record in the proper office, as appears by indorsements thereon on the 5th day of June, and spread at large upon the record on the 8th day of that month. On the last-named day, both instruments were returned to Hasse, and the note and mortgage, together with a letter giving an account of the transaction, sent by him through the mail to Mrs. Boggs. During all this time, and for some time afterwards, the furnishing of labor and materials and the reparation of the house were in progress; but it is not claimed that Mrs. Boggs had any knowledge or suspicion of any of such matters, or that any of the parties to the transaction were guilty of any deceit or fraud, actual or constructive.

This is an action by Mrs. Boggs to foreclose the mortgage, which is long since past due and wholly unpaid. McEwen and his wife, Olma, were made parties defendant, and made default, and are not now complaining of the result of the suit. The other defendants are laborers and materialmen, who filed cross-petitions, claiming mechanics' liens upon the premises. The court found that certain of the liens are prior and superior to the lien of the mortgage, and rendered a decree accordingly. The plaintiff appeals. It is not claimed, and there is no evidence in the record that would tend to support a claim, that the house and lot were subject to any mechanic's lien so long as the title and ownership thereof remained in the Mertens. The delivery of the deed and of the mortgage were plainly intended to be, and were, simultaneous acts, and they both found their way to the public records at the same instant, and as soon as was reasonably convenient after they became effective by delivery, which was not unnecessarily delayed. Until that time, the materialmen dealt with McEwen with at least constructively full knowledge that he was not the owner of, or possessed of, any legal estate or interest in the property. On the 5th day of June, they were advised by the public records that the title had been recently conveyed to McEwen, burdened with the lien of the plaintiff's mortgage. It is evident that the cross-petitioners knew, as a matter of fact, at the time they began furnishing the material for which they claim liens, that the house and lot belonged to the Mertens, who acquired it as heirs at law of one William Merten, who was deceased not long previously, and some of them testify that McEwen told them he had bought the property of the heirs, and had a clear title to it, and that William Merten, Jr., one of the heirs, who was employed by McEwen as a carpenter, told them that the heirs had sold the property to the latter, but it is not claimed that either Merten or McEwen was the agent or representative of Mrs. Boggs in any sense; neither is it pretended that Hasse was such an agent, except for the mere purpose of collecting the certificate of deposit, paying the purchase price, and seeing to the execution and delivery of the deed and mortgage, and the making of them of record. If he knew of the progress of the building operations (which he probably did, though there is no direct evidence to that effect), it was a fact not relevant to the nature of his employment, and not one which it was his duty to make known to his principal. There were no contracts, oral or written, for the furnishing of the labor or materials for which recovery is sought, the former of which seems to have been done by the day or hour and the latter to have been delivered as ordered, from time to time, upon ordinary parcel accounts, according to the custom of the retail dealers. By far the larger part—apparently, nearly the whole—of each of the claims against McEwen thus accrued after the deed and mortgage had been made of record, and none of the cross-complainants testifies to having even so much as heard of the existence of either of these instruments until after the beginning of this action. That the cross-petitioners were grossly negligent in the conduct of their business goes without saying, but that plaintiff was guilty of any fault in that respect, or omitted any precaution which ordinarily prudent persons observe under similar circumstances, is not pretended. On the contrary, she took unusual care and pains to be assured that the unincumbered title of the Mertens should not pass from them until it should be charged with the lien of her mortgage. Under such circumstances, who has the prior or superior right? It seems to us that the question is its own answer.

The case was submitted to us without oral argument, but upon largely voluminous briefs, containing a wealth of citations by

Digitized by Google

both parties; but we do not find referred to among them any authority in point, and we are not aware that there is any such, but we think the case falls within the principle of the decisions of this court in Henry & Coatsworth Co. v. Fisherdick, 37 Neb. 207, 55 N. W. 643; Hoagland v. Lowe, 39 Neb. 397, 58 N. W. 197; Fuller v. Pauley, 48 Neb. 138, 66 N. W. 1115; Bradford v. Anderson, 60 Neb. 368, 83 N. W. 173. One acting in good faith and without negligence, and for a valuable consideration, may safely deal with an apparently and actually unincumbered title, the subject of which is not in adverse possession. This proposition, which accurately describes the attitude of the plaintiff in this transaction, we have never heard disputed. No one contests the validity of the liens except the plaintiff, and, as she is entitled to priority over all of them, she is not in a position so to do.

It is recommended that the judgment of the district court be reversed, and the cause remanded, with instructions to enter a decree awarding the plaintiff a first lien for the amount of her mortgage debt, and adjusting the other liens accordingly.

HASTINGS and OLDHAM, CC., concur.

PER CURIAM. For the reasons stated in the foregoing opinion, it is ordered that the judgment of the district court be reversed, and the cause remanded, with instructions to enter a decree awarding the plaintiff a first lien for the amount of her mortgage debt, and adjusting the other liens accordingly.

STATE ex rel. AINSWORTH PRECINCT v. WESTON, Auditor.

(Supreme Court of Nebraska. Sept. 17, 1903.)

MUNICIPAL CORPORATIONS—ISSUE OF BONDS.

1. Section 14, c. 45, Comp. St. 1901, authorizes any precinct, township, city of the second class, or village "to issue bonds in aid of works of internal improvement, improving streets in cities of the second class and villages, highways," etc. *Held*, that the phrase beginning with the word "improving" is a limitation of the preceding language, and limits the authority to issue bonds to such as are issued in aid of the works specifically enumerated in such phrase.

(Syllabus by the Court.)

Application by the state, on relation of Ainsworth precinct, Brown county, for writ of mandamus to Charles Weston, auditor. Writ denied.

Wm. M. Ely and P. D. McAndrew, for appellant. Frank N. Prout, Atty. Gen., and Norris Brown, Dep. Atty. Gen., for appellee.

SULLIVAN, C. J. This is an application for a peremptory writ of mandamus, commanding the auditor of public accounts to register and certify certain bonds issued by Ainsworth precinct, of Brown county, and payable to the state, as a donation for the use and benefit of a state normal school, to be located in said precinct. The only question involved is whether a state normal school is one of the objects in aid of which a precinct may lawfully issue bonds. The theory of the relator is that a state normal school is a work of internal improvement, and that the issuance of the bonds is authorized by the provision of section 14, c. 45, Comp. St. 1901, which is as follows: "Any precinct, township, city of the second class, or village, organized according to law, is hereby authorized to issue bonds in aid of works of internal improvements, improving streets in cities of the second class and villages, highways, railroads, bridges, courthouses, jails, city and town halls, and the drainage of swamp and wet lands, within such municipal division, to an extent not exceeding ten per cent. of the assessed value of the taxable property at the last assessment within such precinct, township, city of the second class or village." Even were we to concede (which we do not) that a state normal school is a work of internal improvement, within the meaning of the term as used in the Constitution and statutes of this state, the relator's theory would be untenable. The section quoted is not authority for the issuance of bonds in aid of works of internal improvement generally, but in aid of works of internal improvement, "improving streets in cities of the second class and villages, highways, railroads, bridges, courthouses, jails, city and town halls, and the drainage of swamp and wet lands." The quoted phrase is a clear limitation on the preceding language, and limits the works of internal improvement in aid of which the municipalities specified in the act may issue bonds to such as go to the improvement of the objects enumerated in the qualifying clause. As a state normal school is not one of the objects thus enumerated, the bonds are unauthorized, and the respondent properly refused to register them. We do not overlook Traver v. Merrick Co., 14 Neb. 327, 15 N. W. 690, 45 Am. Rep. 111, where bonds issued in aid of a water gristmill for public use were held valid. But they were issued by a county, and in pursuance of section 1 of the chapter referred to, which authorized counties and cities to issue bonds in aid of "any railroad or other work of internal improvement." Neither have we overlooked Cummings v. Hyatt, 54 Neb. 35, 74 N. W. 411, wherein bonds issued in aid of the construction of an irrigation ditch were upheld. But when the bonds in that case were issued, section 14, supra, was not in its present form, but was as follows: "Any precinct, township, or village (less than a city of the second class), organized according to law, is hereby authorized to issue bonds in aid of works of internal improvement, highways, bridges, railroads, courthouse, jails in any part of the county, and the drainage of

Digitized by Google

swamp and wet lands," etc. The section as it now stands was enacted in 1899, when the word "improving," which introduces the qualifying clause, was used for the first time. The introduction of the word at that time is significant. Besides, in that case, what is now section 48, art. 2, c. 93a, Comp. St. 1901, declaring canals constructed for irrigation purposes works of internal improvement, and making all laws in regard to works of internal improvement applicable thereto, was invoked in support of the bonds. The case, therefore, based, as it is, partly on a differently worded section than that now in force, and partly on an act having no relation to the object for which the bonds in question in this case were voted, is not in point.

The writ must be denied.

BENNETT'S ESTATE v. TAYLOR.*

(Supreme Court of Nebraska. Sept. 17, 1903.)

DECEDENT'S ESTATE—PROOF OF CLAIMS—EVIDENCE—DUEBILL—INTEREST — PLEADINGS —APPEAL—AMENDMENT—EXECUTION.

1. The admission in evidence of a book showing an account between a decedent and one who has filed a claim against his estate is not prejudicial error where all the items which the court allowed the jury to consider are charges made by the decedent against the claimant, even though the foundation for the admission of such book as a book of account has not been properly laid.

2. Declarations in his own favor, made by a decedent in his will, are not admissible in favor of his estate against a party filing a claim against the estate.

3. A duebill draws interest from the day of its date, in the absence of some provision therein to the contrary.

4. Pleadings in the county and district courts examined, and *held* not to present different issues.

5. One who claims to be surprised by the allegations made in an amended pleading cannot base error on the order allowing the amendment, in the absence of a showing that he applied for and was denied a continuance of the case, and time to meet any new matter presented by such amendment.

6. The judgment of a district court, entered on an appeal taken from the county court in the matter of a claim filed against the estate of a decedent, should not award the issuance of an execution to satisfy the judgment.

Commissioners' Opinion. Department No. 3. Error to District Court, Douglas County; Estelle, Judge.

"Not to be officially reported."

Action by Harriet L. Taylor against the estate of Lewis M. Bennett. Judgment for plaintiff, and defendant brings error. Modified.

Howard B. Smith, for plaintiff in error. E. J. Cornish, for defendant in error.

DUFFIE, C. July 10, 1901, Harriet L. Taylor filed in the county court a claim against the estate of Lewis M. Bennett for $1,683.45. October 7, 1902, her claim was allowed to the extent of $707.74. October 21, 1902, she appealed to the district court, and filed a transcript of the proceedings had in the county court. A trial was had to a jury, and verdict returned in her favor in the sum of $1,175.82, upon which judgment was entered, and the estate has prosecuted error to this court.

Some time and attention is devoted by counsel for the estate to an item of $30.45, and the claimed departure from the bill of items filed in the county court and the petition filed in the district court relating to said item. The district court held that there was no sufficient proof of this item, and directed the jury to find against the claimant thereon. This takes that item out of the case, and we need not discuss it.

Assignment No. 2 relates to the admission in evidence of certain books of account kept by the deceased, Lewis M. Bennett, and showing the account between him and the claimant. Except as to one item of $243, being a credit in favor of the claimant, which entry was made in the handwriting of Mrs. Bennett, also deceased, the entries were all adverse to the claimant and in favor of the estate. As to the credit of $243 the court instructed the jury that they were not to allow that item in her favor, because of a failure of proof. It is evident, therefore, that the admission of this book of account, if error at all, was error without prejudice.

Assignment No. 3 relates to conversations had in the presence of Mr. Bennett, and we think the evidence was properly admitted. The same may be said in relation to assignment No. 4, which relates to statements in the deposition of a niece and frequent visitor at the house of Mr. Bennett, describing the nature of his disease, the necessity of the constant attendance of a nurse or assistant, and statements made by Mr. Bennett in his lifetime relating to work performed by the claimant.

Assignment No. 5 relates to the refusal of the court to receive in evidence the decedent's bankbook. Among the items filed by claimant was a duebill for $100, dated in August, 1896. Counsel for the estate insists that no interest should be allowed upon this duebill until demand of payment had been made, and he argues that, as the bankbook offered in evidence showed that decedent had more than $100 on deposit to his account from the date of the duebill to the time of his death, it was evidence tending to show that he could have paid the duebill at any time on demand, and that it was the intention of the parties that it should not draw interest. Section 4, c. 44, Comp. St. 1901, defines the instruments upon which interest should be allowed, and a duebill is one of the instruments coming within the definition. There was no error in the court's ruling.

Assignments 6 and 7 relate to a refusal of the court to receive in evidence an item from the will of Lewis M. Bennett, as follows: "4th. I give and bequeath to Harriet Taylor of Omaha, Nebraska, in case she shall survive me, the sum of Three Hundred Dollars ($300.00) in appreciation of faithful and ef-

*Rehearing denied November 18, 1903.

ficient services rendered by her to my wife and myself for many years past." It is said that this part of the will should have been admitted, for the reason that it tended to throw light upon the question whether or not Mr. Bennett, on his part, believed, when he made his will, that the claimant had an undefined claim, for an indefinite amount, for services performed for him, and for the further reason that it showed that in Mr. Bennett's mind there was no distinction between the services rendered him and the services rendered Mrs. Bennett by the claimant, which she insisted upon throughout the trial, and which will be more particularly referred to hereafter in the discussion of other phases of the case. It is a universal principle of the law of evidence that declarations made by a party in his own favor, and in the absence of the adverse party, are not admissible; and we think this principle ought to govern in this case. The reason urged for its admission by the estate is that it was a declaration made by the testator to the effect that Mrs. Taylor had no such claim as she was pressing against the estate. His written declarations in a will are, to our minds, fully as objectionable as oral statements, and are not to be received.

After the testimony had been closed, the court permitted the claimant to file an amended reply. Assignment No. 8 relates to this ruling, and it is insisted that the issues were changed thereby from the case as presented in the county court and during the trial in the district court, and the defendant taken by surprise by the statements therein. That the court has discretion to allow an amendment in a proper case cannot be questioned, and we are agreed that the amendment filed was one within the discretion of the court to allow.

The bill of particulars filed in the county court set up: (1) A claim against the estate of the duebill for $100, above referred to. (2) A claim for $243 for services, which claimant asserted had been credited to her account by the entry of the account book made by Mrs. Bennett in her lifetime, and which the court took from the jury by an instruction. (3) The item of $30.45 entered on the book of account, and which was also taken from the jury. (4) It was stated that the claimant, at the special instance and request of the decedent, rendered services as nurse and housekeeper for said Bennett from the 1st day of January, 1899, to the date of his death, on October 20, 1900, being 94 weeks; that the services consisted of managing the dwelling house of the deceased, and doing all the work usually incident to the duties of a housekeeper, and, in addition thereto, at the special instance and request of the deceased, she rendered services consisting in watching at his bedside both day and night, giving him medicines, baths, rubbing him, and generally performing the duties of a nurse during said period of 94 weeks; "that said services as nurse and housekeeper as aforesaid were of the fair and reasonable value of $15 per week." This last claim, to our mind, is clearly on a quantum meruit. The petition filed by the claimant in the district court, while not in the exact language of the bill of particulars filed in the county court, is not a departure therefrom. No answer was filed by the estate in the proceedings had in the county court. In the district court the executor filed an answer admitting (1) the possession by the claimant of the duebill; (2) admitting the payment by the decedent of various sums credited to the estate in the bill of particulars filed by the claimant in the county court, and also set forth in her petition in the district court; (3) a general denial of all matters in the petition not specifically admitted. The fourth paragraph of the answer is as follows: "That he alleges that from the 17th day of May, 1898, at which time Mrs. Lewis M. Bennett died, down to the 20th day of October, 1900, at which time Lewis M. Bennett died, said claimant rendered services for said Lewis M. Bennett, deceased, in and about the place of his residence in the city of Omaha, but that the exact nature and extent thereof are unknown to affiant. That all such services were continuous, and were rendered for the sum of $4.50 per week, and no greater or different sum." Here is a distinct allegation on the part of the executor of the estate that all the services rendered by the claimant were under a contract, and at the rate of $4.50 per week. The original reply filed in the district court "denied that the services rendered by this claimant for the said Lewis M. Bennett, deceased, between the 1st day of January, 1899, and October 20, 1900, were done and performed at the agreed price of $4.50 per week; and in this behalf plaintiff alleges the fact to be that she had been in the employ of the said Lewis M. Bennett for nine years prior to the 1st day of January, 1899, as an ordinary domestic servant, for which service she received the sum of $4.50 per week." Claimant, further replying, alleges "that said extra work of nursing and giving baths of various kinds and administering medicine and staying in attendance upon the said Lewis M. Bennett at all hours of the day and night, which this claimant did and performed for the said Lewis M. Bennett between the 1st day of January, 1899, and the date of his death on October 20, 1900, were not contemplated by the employment of this claimant as a domestic servant as aforesaid, and were no part of the service which this claimant did and performed for said Bennett for the consideration of $4.50 per week, but were extra services requiring additional time. * * * That said services were performed at the special instance and request of said Bennett, and were of the reasonable value of $10 per week, as alleged in the petition herein." The amended reply is too lengthy to be set out in this opinion, but it alleges that in January, 1899, the claimant was about to quit the employment of said Bennett, and

Digitized by Google

that thereupon he requested her to continue in his employment as housekeeper and nurse, and, as an inducement for her to do so, offered to pay her for her services a larger amount than she had theretofore been receiving, and to make the compensation satisfactory to her, and further agreed to provide plaintiff with a home for the rest of her life; that she accepted said offer, and continued in his employment under the agreement that she was to receive an amount greater than $4.50 per week, for which she had been working for nine years previous thereto. She then recited that during her further employment she continued her duties as housekeeper and the additional duties of nurse to the said Bennett, which required her constant attention. We cannot see that the amended reply tended in the least to change the issues in the case. The question was, what were her services as a nurse reasonably worth? If the executor of the estate was surprised by any matter contained in the reply, and was unable on account thereof to proceed with the trial, his remedy was to apply for a continuance. This he did not do, and he cannot now urge a reversal of the case by this court upon grounds which he did not present to the district court. City of Lincoln v. Staley, 32 Neb. 63, 48 N. W. 887; Nye & Schneider Co. v. Snyder, 56 Neb. 754, 77 N. W. 118.

We have taken time to show the character of the bill of particulars filed in the county court, the petition filed in the district court, the reply and amended reply, for the reason that it is earnestly insisted that, while the claim in the county court was on a quantum meruit, the issue was changed by the pleadings filed in the district court, and a trial had upon a contract. We can see no merit in this claim. It is true that by the reply and amended reply it is tacitly admitted that for her work as housekeeper the claimant was to receive $4.50 per week, but for her additional services as nurse and attendant upon the deceased she was to receive such increased compensation as would be satisfactory to her. As no amount was agreed upon, the allowance of a reasonable amount for such services is not a matter for complaint.

A review of the evidence would serve no useful purpose. What has already been said will dispose of the objections urged to the instructions of the court, except instruction No. 5. A part of that instruction is in the following words: "And should you fail to find for her as explained in instruction No. 4, you should, in that event, find for her and allow her the sum of $4.50 per week during the time herein stated." It is said that the word "fail" was an unfortunate one; that it implied that, if the jury did not find more than $4.50 per week to be due claimant, they would be lacking in some respect, and would, in the judgment of the court, fall short of doing their whole duty under the evidence. It is admitted by the estate that claimant was to receive the sum of $4.50 per week in any event. The case was tried upon that theory. The court, the jury, and every one connected with the case understood that this was the position, and we cannot see that an instruction or instructions which assumes that as a basis could have misled in any way, or have been prejudicial to the estate. The instructions, taken as a whole, were, we think, as favorable as the estate could ask, and we are in grave doubts if the item of $243 appearing in the account book in the handwriting of Mrs. Bennett, but which account was continued and apparently adopted by Mr. Bennett in his dealings with the claimant, was not improperly taken from the jury.

The judgment in this case awards execution to carry it into effect in the following words: "For all of which execution is hereby awarded." Section 239 of chapter 23 of the Compiled Statutes of 1901 provides that "the final decision and judgment in cases so appealed shall be certified to the probate court and proceedings shall be had thereon necessary to carry the judgment of the appellate court into execution." It is possible that by virtue of this statute alone no general execution would be allowed to issue from the district court to enforce the judgment, but the question of the binding force of the judgment and the manner of its enforcement is not one which a prudent counsel would leave for future determination after the time for an appeal had expired. The court had jurisdiction of the parties and the subject-matter of the action, and grave doubt may exist of the right to question it in any manner except by a direct attack on appeal. We think that the court was in error in awarding execution on its judgment, the only method provided for its enforcement being by certifying it to the probate court as an established claim against the estate, where it is to be paid if the estate is solvent and sufficient, and prorated with other allowed claims if the assets of the estate are not sufficient to pay all allowed claims in full.

The verdict of the jury is fairly supported by the evidence, and we recommend an affirmance of the judgment except so far as it awards execution for its enforcement.

KIRKPATRICK and POUND, CC., concur.

PER CURIAM. The conclusions reached by the Commissioners are approved, and, it appearing that the adoption of the recommendations made will result in a right decision of the cause, it is ordered that the judgment of the district court be in all things affirmed except in so far as it awards execution for the enforcement of said judgment, and as to the award of execution it be reversed.

Digitized by Google

COUNSMAN v. MODERN WOODMEN OF AMERICA.

(Supreme Court of Nebraska. Sept. 1, 1903.)

MUTUAL BENEFIT ASSOCIATION—CHANGE OF BENEFICIARIES.

1. A change of beneficiaries made by a member of a mutual benefit insurance association, which does not reach the head office until after the death of the member, and then is refused, because not in accordance with the by-laws as to a part of the fund, has no effect as to the part of the fund in reference to which it is in proper form; the association having a by-law which declares the old certificate to be in effect until the new one is delivered.

(Syllabus by the Court.)

Commissioners' Opinion. Department No. 1. Error to District Court, Douglas County; Keysor, Judge.

Action by Mary E. Counsman against the Modern Woodmen of America. Judgment for defendant, and plaintiff brings error. Reversed.

Charles G. McDonald and James A. C. Kennedy, for plaintiff in error. Geo. W. Cooper, for defendant in error.

HASTINGS, C. This case presents but one question for our consideration, and that is, whether or not the beneficiary in the insurance certificate of Ulysses G. Counsman was changed by his action on the 28th day of May, 1901, he having died before 6 o'clock in the morning on May 29th of that year. On the evening of the 29th, his benefit certificate, with the indication of the change, was forwarded to the head camp of the order by W. B. Wardell, clerk of Omaha Camp No. 1,833. Counsman died on the next morning, and his benefit certificate was received at the head camp in Rock Island on the 30th, and on the 31st, no notice of his death having yet been received, the certificate was mailed to the clerk at Omaha by the head clerk, with a letter refusing to make the requested change, because it was not in accordance with the by-laws of the association. The certificate had named his son to the extent of $1,500, and his wife to the extent of $500, as beneficiaries, and the proposed change named his mother instead of his wife, and his father as trustee for the boy as to the remainder of the benefit. Such a trustee is forbidden by the rules of the organization, and the certificate was therefore returned to be corrected, but of course could not be after the death of the assured. The organization paid the $1,500 due the boy to his guardian. The $500 was claimed both by the mother and the wife. The association filed its petition, asking leave to pay the $500 into court, and be relieved from further liability, and that the court dispose of the fund. This order was granted. The mother, Arabella Counsman, and the wife, Mary Counsman, each filed answer and cross-petition, claiming the money. The money was paid, and the association discharged. The district court found the mother was entitled to the $500. Motion for new trial was filed by the wife, on the ground that the decision was contrary to law, and not sustained by sufficient evidence, and also on the ground of newly-discovered evidence and errors of law occurring at the trial. This motion was overruled. Supersedeas bond was given, and the case brought by petition in error to this court by Attorneys McDonald and Kennedy, on leave obtained in this court, because of the refusal of their client to prosecute the action, and because of their having an interest in the result, under an agreement for a contingent fee.

The only point urged is that the evidence was insufficient to show a right on the part of the mother, and that the attempt to change the beneficiary was not completed. The benefit certificate was dated May 23, 1898. By the provisions of the by-laws in force at that time, a member in good standing at any time might change the beneficiary by paying to the camp clerk 50 cents, and delivering his certificate, with the surrender clause on the back of it filled out, to designate the change. This surrender should be executed in the presence of the camp clerk, but, if he could not be present, then its execution might be attested or acknowledged by any person authorized to administer oaths and take acknowledgments. The local clerk was to forward this certificate, with the surrender clause indorsed, and one-half of the fee to the head clerk, who should thereupon issue a new certificate to the beneficiary named in the surrender clause, provided such beneficiary should meet the requirements of the by-laws. In June, 1899, however, this provision was changed, and a new by-law adopted, identical with the old one, but with the clause added that no change in the beneficiary shall be of effect until the delivery of the new certificate, and until then the old certificate shall be held in force. Both provided that no change should be of binding force unless made in compliance with this section. It is not claimed that this was done, but it is claimed that the assured in his lifetime having changed the beneficiary, so far as he could, with reference to this $500, it should be upheld; that the change with regard to his son, which was made at the same time, but was not in accordance with the by-laws of the organization, and was refused, had nothing to do with this $500. It is claimed on behalf of the defendant in error that this new by-law, adopted in 1899, after the issuance of this certificate, has no relation to it. This, however, cannot be the case, for the benefit certificate itself expressly provides for a compliance with the by-laws in existence, and with such as should thereafter be adopted.

The real question is whether any one but the association could raise the question that this change had not been acquiesced in by the association. The learned trial court seems

to have regarded the matter of beneficiary as wholly within the disposal of the assured. We cannot so regard it. It is a matter of agreement between the assured and the association. It was something which the association was to do. Under its by-laws' requirements, he was powerless to do it himself. After his death, it would seem that the association and the local camp clerk were powerless to do it for him. Doubtless, if he had procured his benefit certificate to reach the head camp in his lifetime in due form, so that it would have been entitled to the approval and the issuance of a new certificate, in the absence of express restriction in the by-laws, a new beneficiary would be entitled to receive the fund. Our own court, it is true, has held that beneficiaries have no vested interest in certificates of this kind until the death of the assured, and that the power to change rests with the assured and the association. The change, however, is conditional upon compliance with the laws of the society. Fisher v. Donovan, 57 Neb. 361, 77 N. W. 778, 44 L. R. A. 383. It would seem that the death of the assured, Counsman, before the presentation even of this requirement for a change of beneficiaries, which was refused when presented because of its noncompliance with the by-laws of the association, effectually prevented his desire in this respect from taking effect, and caused the right to the fund to vest upon his death, eo instanti, in the beneficiary named in the certificate, which the by-laws provided should be still in force.

It is recommended that the judgment of the trial court be reversed, and the cause remanded.

AMES and OLDHAM, CC., concur.

PER CURIAM. For the reasons stated in the foregoing opinion, the judgment of the trial court is reversed, and the cause remanded.

MITCHELL et al. v. CLAY COUNTY.

(Supreme Court of Nebraska. Sept. 17, 1903.)

COUNTY COMMISSIONERS — POWERS — CLAIMS AGAINST COUNTY—ACCOUNTS OF COUNTY OFFICERS—ADJUSTMENT—COMPENSATION.

1. Prior decisions as to the powers of county commissioners in passing upon claims against the county and in making settlements with county officers examined and discussed.

2. When the law commits to any officer the duty of looking into facts and acting upon them, not in a way which it specifically directs, but after a discretion in its nature judicial, the function is quasi judicial.

3. County commissioners act quasi judicially in passing upon claims against the county whenever their action is not merely a formal prerequisite to the issuance of a warrant, but involves the determination of questions of fact upon evidence, or the exercise of discretion in ascertaining or fixing the amount to be allowed.

4. But they have no judicial power or discretion as to interpretation of the law. Whenever the course to be pursued or the amount to be allowed is fixed by law, they must follow the law, and their acts in so doing or endeavoring so to do are ministerial only.

5. The action of county commissioners in adjusting the accounts of county officers under sections 43, 44, art. 1, c. 18, Comp. St. 1901, is ministerial only.

6. A settlement with a county officer, which, in substance, is an adjustment of his accounts, does not become quasi judicial, so as not to be reviewable otherwise than by appeal, merely because claims were filed for sums claimed to be due such officer and allowed for the purpose of enabling warrants to be drawn therefor.

7. If, in such case, the compensation to be allowed the officer is fixed by law, the allowance of the claim is formal only.

8. On the other hand, if the amount to be allowed is in the discretion of the commissioners, or if, in fixing such amount, the law requires them to decide questions of fact, their action is quasi judicial.

(Syllabus by the Court.)

Commissioners' Opinion. Department No. 2. Error to District Court, Clay County; Stubbs, Judge.

Action by the county of Clay against George Mitchell and others. Judgment for plaintiff, and defendants bring error. Reversed.

George H. Hastings, Wm. Clark, and Thomas H. Matters, for plaintiffs in error. Ambrose E. Epperson, for defendant in error.

POUND, C. This action was brought by the county of Clay against Mitchell, formerly the clerk of said county, and the sureties on his bond, to recover moneys received by Mitchell, as such officer, in excess of the compensation allowed him by law. The answer, among other things, alleged that Mitchell had performed certain extra services for the county for which no fees were provided, and had made out and presented claims for such services to the county board, which said board in due course allowed and ordered paid; that no appeal had ever been taken from said judgments and orders, and they remained in full force, unappealed from, unreversed, and unmodified; that warrants had been issued to him for said amounts by order of said board; and that this suit was brought to recover back the sums allowed and paid him as aforesaid. Trial was had to the court, which found for the plaintiff. The items in controversy are of two kinds. On the one hand, there are allowances for services as clerk of the county board in accordance with section 14, c. 28, Comp. St. 1901. On the other hand, there are items for services in canvassing election returns, for which the statute provides a specified compensation.

An examination of the reported decisions of this court will disclose that three different views have been taken as to the effect of such settlements with county officers. In the earlier cases it was held that the board had no discretion to allow any sums in excess of the compensation fixed by law, and that its action in allowing claims where the amount was determined by statute was min-

Digitized by Google

isterial only, and not binding in collateral proceedings. Subsequently a line of cases sprang up in which it came to be held that whenever a claim was filed under section 37, art. 1, c. 18, Comp. St. 1901, the action of the county board in passing on such a claim was judicial, and was binding in collateral proceedings in the absence of fraud, concealment, or misrepresentation. More recently a few cases have gone still further, and have indicated that any settlement with the county officer purporting to be full and final is binding both upon the officer and county, unless appealed from. Under such circumstances it seems expedient to review the decisions at length, in order to ascertain whether and how far they may be reconciled, and to deduce from them, if possible, a consistent doctrine upon this subject in harmony with the statutes.

The earliest case in the reports dealing with this matter is Brown v. Otoe County Com'rs, 6 Neb. 111. The question in that case was whether an action could be brought against the county for printing and publishing a delinquent tax list or the claimant must be left to appeal from the action of the county board. The court held that the action of the commissioners on a claim of that character was judicial, and that their determination was conclusive, unless reversed upon error or appeal. In State v. County Commissioners, 6 Neb. 454, another phase of the same question arose with reference to a claim for money due on a contract for building a portion of a bridge lying in two counties. It was held that the action of the board on such claim was judicial and conclusive unless appealed from, and hence that the board could not afterwards vacate its own adjudication. The question whether a board of county commissioners could vacate an order allowing a claim arose again in Kemerer v. State, 7 Neb. 130. In this case the county clerk presented a claim for preparing the tax list, a service for which the fees were definitely fixed by law. The court held that the allowance of the claim in such a case was not a judicial act, "because the board has no judgment or discretion to exercise in the matter." Discussing this point it said: "Fees of the county clerk for preparing the tax list and duplicate are definitely fixed by law, and the board cannot make them any greater or any less, and therefore the duty of the board is merely ministerial; that is, to issue a warrant to the clerk for the amount so fixed by law for preparing the tax list and duplicate." Richardson County v. Hull, 24 Neb. 537, 39 N. W. 608, was a suit against the county to recover a sum claimed to have been paid as taxes upon a tract not subject to assessment. It was held that this cause of action must be prosecuted by presenting a claim to the county commissioners in the first instance, and that the action of the commissioners on such a claim was judicial and conclusive unless appealed from. In this case, in order to ascertain whether or not the lands were subject to assessment, it was necessary to find, as a question of fact, whether one Wilbur, whose widow and heirs at law held title to the land, was a Union soldier in the service of the United States during the Civil War and lost his life in such war, and to find that said land was the only property possessed by them in the state, and did not exceed $2,000 in value during the years it was assessed. Hence it is apparent that questions of fact were involved which it was necessary for the commissioners to decide upon evidence. State v. Roderick, 25 Neb. 629, 41 N. W. 404, was a similar case to Kemerer v. State, supra. A writ of mandamus was applied for to compel the county treasurer to pay to relator, the city treasurer, moneys in his hands, alleged to belong to the municipality. The county treasurer claimed to retain the sums in dispute as commissions and as fees for certain services for which fees were fixed by statute. The statute also fixed precisely the amount of commissions which he might charge. The court said that the fact that the amount was reported to the county board and allowed by them would make no difference, since, as the compensation was fixed by law, the county board had no jurisdiction or authority to increase it. "Where the fees are fixed by statute," said Reese, C. J., "the county board acts ministerially, and not judicially, in allowing and paying such fees. The allowance of any amount in excess of that fixed by law is simply void." This case was followed in County of Logan v. Doan, 34 Neb. 104, 51 N. W. 598, in which the court said: "Nor has the county board the power to allow a public officer a compensation in excess of that allowed by statute, nor where none is authorized." Ragoss v. Cuming County, 36 Neb. 375, 54 N. W. 683, was an action by a county against a former county clerk to recover fees collected by him while in office. The items in dispute were for making the tax list in two separate years, for making assessors' books for the same two years, for extra services for one of the years, and for searching the records in a case against the county. The defense was that certain assistants or deputies had been appointed by order of the county board, and that the sums in question had been paid to such assistants. The action of the board involved was its allowance of money paid out of excess fees to deputies and assistants upon claims filed by the clerk. How many assistants the clerk required was left to the judgment and discretion of the board by the statute applicable to that county at the time, and hence its action was clearly one requiring the exercise of discretion within the rule announced in Kemerer v. State. Accordingly, the court held that the allowance of the claims was not open to collateral attack in the absence of fraud.

Thus far, it will be seen, the authorities are entirely consistent. The principle clear-

Digitized by Google

ly to be deduced from them is that county commissioners act quasi judicially in passing upon claims against the county whenever such action involves the determination of questions of fact upon evidence, or the exercise of discretion in ascertaining or fixing the amount to be allowed. But whenever the course to be pursued or the amount to be allowed is fixed by law, they have no discretion, and must follow the law, and their acts in so doing or endeavoring so to do are ministerial only. The first hint of a departure from these principles is to be found in State v. Churchill, 37 Neb. 702, 56 N. W. 484. This was an application for mandamus to compel the county board to issue a warrant for a sum of money alleged to be due the relator for services as bailiff in the district court. The statute then in force provided that bailiffs should receive $2 per day for their services. The county board deducted a considerable amount of delinquent taxes from the warrant issued to the relator, under the authority of section 49, art. 1, c. 18, Comp. St. 1901. It was contended that the statute of limitations had run against these taxes, and hence the amount thereof could not be deducted. It will be noted that the amount payable to the bailiff was absolutely fixed by law, and that the law imperatively required the board to deduct all delinquent taxes without leaving them any discretion in the matter. The court held, however, that the county board, in examining and allowing the claim, acted judicially, and that its order was conclusive unless reversed, and hence that the deduction of taxes improperly was at most an error. It is evident from reading the opinion that there was no intention of departing from the principles of the prior cases. Moreover, the ruling may be justified and was undoubtedly right upon another ground. Section 646, Code Civ. Proc. provides that mandamus shall not issue in any case where there is a plain and adequate remedy in the ordinary course of the law. Hence, so long as the relator had a remedy by appeal from the action of the county board, the writ of mandamus was not available to him. The statute absolutely requires claims to be filed before warrants issue, and an appeal may be taken in all cases without reference to whether the action of the board was ministerial or judicial. It is true it might be said that under our Constitution the courts have judicial powers only, and hence a merely ministerial proceeding could hardly be maintained, as such, in the district court. But review of ministerial acts which preclude a citizen from obtaining money due him from the public is judicial in its nature, and it cannot make any difference whether such review takes the form of an appeal or of proceedings in error. These observations apply also to Pennock v. Douglas County, 39 Neb. 293, 58 N. W. 117, 27 L. R. A. 121, 42 Am. St. Rep. 579. This was an action against the county to recover money paid by the purchaser of real estate at a tax sale, on the ground that the taxes and assessments were illegal and void. As the claim was contractual in its nature, it clearly came within the purview of section 37, art. 1, c. 18, Comp. St. 1901, and hence was maintainable only in the manner prescribed by the statute. The question whether the action of the board in such a case was judicial or ministerial was not necessarily involved, and the holding of the court that the district court could not try an action of that character unless a claim was first filed with the county commissioners and an appeal taken from their order, in effect decides a point of practice only. This view is sustained by a recent decision of this court in Custer County v. Chicago, B. & Q. R. R. Co., 62 Neb. 657, 87 N. W. 341, in which it is held that the provisions of section 145, art. 1, c. 77, Comp. St. 1901, are intended to enable the county board to inquire into the merits of claims filed under the preceding sections, and pay such of them as it may deem just without litigation, and that the action of the county board under that section is not judicial, although claims are filed and the ordinary process of allowance or disallowance gone through with according to section 37, art. 1, c. 18, Comp. St. 1901.

The first real departure, therefore, from the ruling established by the prior decisions is to be found in Sioux County v. Jameson, 43 Neb. 265, 61 N. W. 596. In that case the county board employed an assistant, and presented claims to the county commissioners for the remuneration of such assistant, which were allowed, and paid by warrants on the general fund. Afterwards the county sued to recover back the money so paid. The right to employ assistants and pay them out of the fees of the office was fixed by section 14a, c. 28, Comp. St. 1901. That section applied only to counties having over 25,000 inhabitants, and hence not to Sioux county at the time this cause arose. It seems clear, therefore, that in this case the county clerk was allowed to receive the whole $1,500 provided for by the statute, and also $98 paid to the clerk or assistant for performing duties which the clerk ought to have performed, and that the action of the board in allowing this extra compensation, according to the rule laid down in Kemerer v. State and State v. Roderick, was of no force. Nevertheless the court said: "The petition raises the question, could the county commissioners allow a claim for the services of a clerk or an assistant to the county clerk, and order the amount of the claim paid from the general fund of the county? This was for them to determine at the time the claims were presented for their examination and allowance or disallowance, and from their decision the Legislature has provided for an appeal. It has been definitely settled by repeated decisions of this court that the county board, in the examination and allowance or rejection of claims against the county, acts ju-

Digitized by Google

dicially, and its judgments or orders in such cases are conclusive, unless reversed in the manner provided by law." The court did not intend, if we may judge from the opinion, to depart from the principles theretofore announced. It either overlooked the line of cases holding that allowance for compensation in excess of the amount expressly fixed by statute was of no force, or else it assumed that the county commissioners had a quasi judicial power to construe the statutes. No suggestion to the latter effect is to be found in the opinion, and we may take it that the cause was argued and presented to the court as one involving judicial action on the part of the commissioners, without calling attention to such cases as Kemerer v. State and State v. Roderick. No conscious departure from the latter case is to be found in the Reports until the case of Heald v. Polk County, 46 Neb. 28, 64 N. W. 376, which is the basis of a new line of decisions, taking quite a different view. In this case a county clerk, after making a report of all fees received, and retaining the amount fixed by law, filed a claim for some $200 for making out the tax list of the county. This claim was allowed, and a warrant delivered to the clerk. Afterwards suit was brought to recover the money. The court held that, where the law prescribes the duties of a public officer, and fixes his compensation, he must perform all the duties required of him for the compensation fixed. It held also that the clerk was not entitled to any extra compensation for making out the tax lists in a county having less than 25,000 inhabitants under the statutes in force at that time. It conceded that the board acted ministerially in examining the clerk's report and adjusting the accounts between him and the county. But it held that the examination and adjustment of the reports on the one hand and the allowance of the claim on the other were independent transactions, and that in allowing the claim the board exercised judicial functions, so that its decision was conclusive as against collateral attack. In support of this holding it cited Brown v. Otoe County, supra; State v. Buffalo County, 6 Neb. 454; Dixon County v. Barnes, 13 Neb. 294, 13 N. W. 623; Ragoss v. Cuming County, supra; State v. Churchill, supra; and Sioux County v. Jameson, supra. The first four cases do not sustain any such holding, but are each in entire accord with the rule laid down in Kemerer v. State and State v. Roderick. State v. Churchill has been considered already. Sioux County v. Jameson is the only case cited affording any ground for the decision, and in that case, as we have seen, the deviation from the original rule was unintended and unconscious.

Heald v. Polk County has been followed in Ragoss v. Cuming County, 46 Neb. 36, 64 N. W. 378—a case in all respects the same; State v. Vincent, 46 Neb. 408, 65 N. W. 50; Cuming County v. Thiele, 48 Neb. 888, 67 N. W. 883, and Trites v. Hitchcock County, 53 Neb. 79, 73 N. W. 215. In several other cases the court has cited Heald v. Polk County arguendo, or has purported to follow it in cases to which it was not applicable, which were in entire accord with the prior decisions. For instance, in Hazelet v. Holt County, 51 Neb. 716, 71 N. W. 717, the court held that "a county board, in its examination of reports of the county clerk of fees received by him, and in the adjustment of the accounts between him and the county, acts ministerially; and if, through fraud or mistake, he is allowed to retain fees which he should not, such adjustment is no defense or bar to an action by the county to recover such fees." This ruling is manifestly required by sections 43, 44, art. 1, c. 18, Comp. St. 1901. The court said obiter, however, that, if the sums improperly allowed in the adjustment had been presented by way of claims and allowed as such, the allowance would have been conclusive. In Taylor v. Davey, 55 Neb. 153, 75 N. W. 553, there was a suit to enjoin payment of a claim allowed by the board to an expert for examining the books of a county treasurer. The court held properly that the action of the board was judicial. It cited, however, Heald v. Polk County and Sioux County v. Jameson. The opinion in Heald v. Polk County does not make it very clear upon what principle the court separated the action of the commissioners into two parts governed by distinct rules, namely, the adjustment of the account on the one hand, and the allowance of the claims presented in connection therewith on the other. This point was dealt with in Trites v. Hitchcock County, supra, in which the court held substantially that when the commissioners act under section 37, art. 1, c. 18, Comp. St. 1901, they act judicially, while when they act under section 43 their action is ministerial only.

It will be remembered that Heald v. Polk County, and other cases following that decision, maintain carefully the distinction between the allowance of claims and the mere adjustment of an officer's accounts and settlement thereof. A third line of cases has sprung up, however, in which this distinction is lost sight of, and the action of the board in making a final settlement with an officer is treated as judicial and conclusive, unless reversed upon error or appeal, in all cases. The first case of this character is Gage County v. Hill, 52 Neb. 444, 72 N. W. 581. In that case the county sued a former clerk for fees retained by him in excess of his legal compensation. He pleaded that during the term of his office he had made "full and complete settlements with the county board of said county while such board was in session, and had fully, completely, accurately, and faithfully accounted to the said board for the several sums for which the action was brought; that the amounts ascertained on said settlements to be due from said Hill had been paid by said Hill to the person and

Digitized by Google

officers entitled to receive the same; and that he had, at the termination of his term of his office, fully accounted for all sums found by said board to be in his hands, and by said board he had, at the expiration of his said term of office, been discharged for all moneys, fees, and warrants received by him during the term of his office." This answer was demurred to, and the district court overruled the demurrer. In affirming this judgment the court said that the case was in all respects similar to Sioux County v. Jameson, supra, Heald v. Polk County, supra, and Ragoss v. Cuming County, 46 Neb. 36, 64 N. W. 378. But, if the opinion accurately states the answer, it will be seen that such is not the case. The decision goes much further than any prior holding of the court, since Hill did not plead that claims had been presented and allowed, but simply that his accounts had been examined and adjusted by the board. In County of Douglas v. Bennett, 61 Neb. 660, 85 N. W. 833, this court expressly put itself upon the ground which is clearly required to sustain Gage County v. Hill. In this case the court says: "Where a full and complete settlement of a county officer with the county commissioners who are authorized to make the same has been made, such settlement is final and conclusive, unless there is fraud, mistake, or imposition in making the same." The question was as to the sufficiency of the answer in an action by the county against a former sheriff. The answer, as stated in the opinion, did not allege that any claims had been filed and allowed under said section 37, but merely set up a full accounting, adjustment, and settlement. This was held sufficient. It will be seen that while the court in Gage County v. Hill and County of Douglas v. Bennett did not expressly overrule any of the prior cases, these cases constitute a third line of decision, entirely inconsistent with either of the prior courses of adjudication, and, if adhered to, substantially alter the usual interpretations of sections 43, 44, art. 1, c. 18, Comp. St. 1901.

Since the decision in Heald v. Polk County, the court has adhered in several cases to the original line of authorities. As recently as Perkins County v. Keith County, 58 Neb. 323, 78 N. W. 630, the court cites Kemerer v. State with approval. In this case a county had been divided, and in the process of division a balance was due from one county to the other, which was definitely settled and agreed upon. Of course, it became necessary, before a warrant could be issued, to go through the form of making a claim and allowing it. The court held, however, that there was nothing in such a case upon which the county board of the debtor county could "exercise judgment or discretion," and hence that an original action might be brought in the district court. The court said (on page 327, 58 Neb., and page 631, 78 N. W.): "No case, we are sure, has gone to the length of holding that a single demand, the amount and validity of which has become unalterably fixed, must be presented to the county board to be audited and allowed." Nevertheless, the court had been holding for a long time that, if the amount and validity of a claim was fixed absolutely by statute, upon presentation of a claim for a greater amount the county board had a discretion to allow such greater amount, and its action in so doing was judicial. In Bush v. Johnson County, 48 Neb. 1, 66 N. W. 1023, 32 L. R. A. 223, 58 Am. St. Rep. 673, the county brought an action against a former treasurer, and the question involved was whether a settlement between him and the county board was a judicial determination. The court held it was not. Its language in this connection is instructive, because Gage County v. Hill and County of Douglas v. Bennett cannot be reconciled therewith. It said: "These periodical settlements assigned by our statutes to be made with county treasurers do not have the elements in them of a judicial determination of the subjects involved. It would not be contended that, if the county commissioners state, as a matter of record, as the result of one of these so-called settlements, that the treasurer was short in his accounts in a stated sum, and consequently indebted to the county in such sum, that this would constitute an adjudication of the whole matter, and, unless appealed from, it would be final and binding on the parties and not open to attack. No more can the result obtained by the examination be said to be binding and conclusive upon the county in regard to the amounts reported on hand by the treasurer being the exact, true amounts, or their payment by the treasurer preclude the institution and successful prosecution of an action for any further sums which he has failed to report or to pay over. It can have no further or greater conclusiveness than any settlement made between private persons." In Stenberg v. State, 48 Neb. 306, 67 N. W. 190, the court said: "A county board has exclusive original jurisdiction to examine and pass upon claims or demands against the county properly cognizable for audit and allowance, and the jurisdiction of the district court as to such is appellate merely." In this case there was an application for a writ of mandamus to compel the county commissioners to issue a warrant for payment of a judgment recovered against the county. The question was raised whether this judgment was invalid by reason of not having been presented to the county commissioners in the first instance, so that the district court which rendered the judgment acquired no jurisdiction of the claim. What the court said in the quotation above noted was not necessary to the determination of the case, but is noteworthy on account of the use of the words "properly cognizable."

The foregoing review of the authorities would seem sufficient to demonstrate that this entire subject is in need of revision.

Digitized by Google

The doctrine of Gage County v. Hill and County of Douglas v. Bennett cannot be reconciled with the plain import of said section 44, which contemplates that an adjustment or a settlement of accounts with a county officer shall be simply a basis for the recovery at law of any balance which may be found due. Moreover, those cases are absolutely irreconcilable with the line of decisions beginning with Heald v. Polk County, in which a distinction is made between the allowance of claims under section 37 and the adjustment of accounts under section 43. This distinction is not without plausibility; but, if it is to be maintained, it must follow that in every case in which a claim contractual or quasi contractual is asserted against a county, whether or not the statute absolutely fixes the course which the commissioners shall follow or the amount which they may allow, they have a discretion, arising from the mere fact that a claim is filed, to take such action or make such allowance as they please. The opinion of the court in Kemerer v. State is a complete answer to any such contention, and we heartily concur in the expression of surprise in the opinion of Sullivan, J., in Perkins County v. Keith County, supra, that any case should be found contending for such a proposition. Kemerer v. State having been approved and relied upon in Perkins County v. Keith County, the situation is that three different doctrines upon this subject are to be found in the Reports, all of them sanctioned by recent cases, and one of them, at least, in conflict with the statutes.

Under such circumstances we think the question may fairly be treated as res nova, and, looking at it in that way, we have no doubt that the doctrine of the older cases should be preferred, and ought to be finally adhered to. When the law commits to an officer the duty of looking into facts and acting upon them, not in a way which it specifically directs, but after a discretion in its nature judicial, the function is quasi judicial. State v. Hastings, 37 Neb. 96, 117, 55 N. W. 774. This, we think, is the true criterion. It is not the form of the action taken by the commissioners, but the nature and character of the action itself, by which we are to judge whether it is ministerial or quasi judicial. County commissioners act quasi judicially in passing upon claims against the county whenever their action is not merely a formal prerequisite to the issuance of a warrant, but involves the determination of questions of fact upon evidence, as in Richardson County v. Hull, 24 Neb. 537, 39 N. W. 608, or the exercise of discretion in ascertaining or fixing the amount to be allowed, as in Ragoss v. Cuming County, 36 Neb. 375, 54 N. W. 683. But they have no judicial power or discretion as to interpretation of the law. If this power is to be conceded to county commissioners, it follows that their action in such matters cannot be controlled by writ of mandamus, and that, however absurd or erroneous the construction which they put upon the statutes, the sole remedy is by petition in error in the district court. Whenever the course to be pursued or the amount to be allowed is fixed by law, they must follow the law, and their acts in so doing or endeavoring so to do are ministerial only, no matter what form such acts may take. So far as Heald v. Polk County held that the action of county commissioners in adjusting the accounts of county officers under sections 43, 44, art. 1, c. 18, Comp. St. 1901, is ministerial only, that decision is not only in accord with the prior cases, but is absolutely required by the terms of the statute. This holding was expressly approved and repeated in Bush v. Johnson County, 48 Neb. 1, 66 N. W. 1023, 32 L. R. A. 223, 58 Am. St. Rep. 673, and Hazelet v. Holt County, 51 Neb. 716, 71 N. W. 717. The two subsequent cases of Gage County v. Hill and County of Douglas v. Bennett, if, as appears on their face, they are in conflict therewith, should be disapproved. But what can it matter that such a settlement or adjustment may involve the formality of a claim against the county in order to permit a warrant to issue for the sum which may be found due the officer in the course thereof? If the allowance of a claim in such a case requires no facts to be ascertained upon evidence, and involves no discretion whatever, how can the case differ from Perkins County v. Keith County, or fail to be governed by the very apt remark of Sullivan, J., in that case: "When the amount of the defendant's liability was settled by contract, and there remained nothing in regard to the matter upon which its commissioners could exercise discretion, there was nothing to examine and adjust or audit and allow. It would be a work of supererogation for the commissioners to examine and allow a claim which, under the authority of the statute, they had already fully examined and legally allowed." In other words, the only substantial function of a claim in such cases is to serve as the formal basis for the issuance of a warrant. Hence it would seem clear that a settlement with a county officer, which, in substance, is an adjustment of his accounts, does not become quasi judicial, so as not to be reviewable otherwise than by appeal, because claims were filed for sums claimed to be due such officer, and allowed for the purpose of enabling warrants to be drawn therefor. If, in such case, the compensation to be allowed the officer is fixed by law, the allowance of the claim is only formal. On the other hand, if the amount to be allowed is in the discretion of the board, or if, in fixing such amount, the law requires the commissioners to decide questions of fact, their action is quasi judicial.

If the foregoing are the correct principles by which this cause is to be determined, it follows that, so far as the claims for services as clerk of the county board are concerned,

Digitized by Google

the judgment of the district court is erroneous, while with respect to the claims for canvassing the election returns it is correct. Section 14, c. 28, Comp. St. 1901, provides that the county clerk shall be allowed, for performing the duties of clerk of the county commissioners and attending to the business of the county, such salary per annum, to be paid upon account quarterly, as the county commissioners may allow, not exceeding $400 per year. The amount of compensation, not exceeding $400, is left to the county board. A claim for services of this character is in the nature of a quantum meruit. In order to fix the proper amount, the board must determine, as a matter of fact, what services were rendered and what they were worth. On the other hand, the statute fixes absolutely and arbitrarily the amount which shall be allowed for canvassing election returns. Section 24, c. 28, Comp. St. 1901. In this matter, therefore, the board have no discretion, and their action is purely ministerial. The judgment of the district court, so far as it permits recovery notwithstanding the allowance of claims for canvassing election returns, is correct; but it cannot be sustained so far as it allows recovery of the moneys allowed to the clerk upon his claims for services as clerk to the county board.

It is therefore recommended that the judgment of the district court be reversed, and the case remanded.

BARNES and OLDHAM, CC., concur in recommending that the judgment be reversed.

PER CURIAM. For the reasons stated in the foregoing opinion, the judgment of the district court is reversed, and the cause is remanded.

POLLARD v. McKENNEY et al.*

(Supreme Court of Nebraska. Sept. 17, 1903.)

EXPRESS TRUST—FRAUD—EVIDENCE—CONSTRUCTIVE TRUST.

1. An express trust in land does not arise and cannot be created by parol; aliter, resulting and constructive trusts.

2. Ordinarily, a false promise, upon which fraud may be predicated, must be of an existing fact, or a fact alleged at the time to exist, and cannot consist of a mere promise to be performed in the future; but, if the intention not to perform the promise be shown to have existed at the time the promise was made, the promise is fraudulent.

3. Where a wife prevails upon her husband, who is fatally ill, to convey certain of his property to her by promising to make a certain disposition thereof among his heirs at law, it will be presumed from her willful failure to make such disposition that her promise was made without any intention of performing it, and was therefore fraudulent.

4. Where a person obtains the legal title to real estate belonging to another by means of fraud, actual or constructive, a court of equity will fasten a constructive trust upon the property, and convert the grantee or those claiming under him by descent into trustees of the legal title, and enforce the trust for the benefit of the grantor or those claiming under him.

(Syllabus by the Court.)

Commissioners' Opinion. Department No. 2. Error to District Court, Nemaha County; Stull, Judge.

Action by Samuel J. Pollard against Millie J. McKenney and others. Judgment for defendants, and plaintiff brings error. Reversed.

H. A. Lambert and J. S. McCarty, for plaintiff in error. Kelligar & Ferneau, for defendants in error.

ALBERT, C. This is a suit in which it is sought to have a trust declared in favor of the plaintiff in certain real estate in Nemaha county. The petition shows that Samuel Pollard and Mary Jane Pollard were husband and wife; that the former died in October, 1881; that the deceased for some time before his death was the owner of the lands in suit, which was the family homestead; that the plaintiff and the defendants Millie J. McKenney and Mary E. Dearborn are the only children of the deceased and his wife, and that the defendant Lela L. McKenney is the daughter of Millie J. McKenney, and the defendant Mary G. Dearborn is the daughter of the defendant Mary E. Dearborn. The following, taken from the petition, is necessary to an understanding of the case: "That for a long time prior to his death the said Samuel Pollard was an invalid, and in feeble health, afflicted with progressive epileptic fits and paralysis, and knew that he could not recover therefrom. That while thus afflicted, and recognizing that he could not recover, and while of sound mind and memory, he intended and purposed the following disposition of his property, to wit: That his wife, the said Mary Jane Pollard, should have the use, rents, and profits of the above-described lands for and during her lifetime, subject to the payment of his debts, and that the fee of said land should vest in the plaintiff, and that the plaintiff upon the death of his mother, the said Mary Jane Pollard, should pay to the defendants, his sisters, Mary Eviline Dearborn and Millie Junietta McKenney (then Millie Junietta Pollard), the sum of one thousand dollars ($1,000) each. That to carry out such intent and purposes the said Samuel Pollard expressed his determination of having a will executed and drawn to that effect, but the said Mary Jane Pollard represented to him that such a disposition by will would entail large expense on the estate by way of court fees and in probating and administration, and suggested and advised that he make such disposition by deed, to which the said Samuel Pollard assented, and thereafter caused a deed to be drawn conveying the said real estate to the plaintiff herein in fee simple, subject to the life estate of the said Mary Jane Pollard, and the payment of this plaintiff to his said sisters, defendants herein, the sum of one thousand

*Rehearing denied November 18, 1903.

Digitized by Google

($1,000) dollars each, at the time of the death of the said Mary Jane Pollard, charging the said Mary Jane Pollard with the payment of all the debts of the said Samuel Pollard. That the said Mary Jane Pollard delayed the execution of the deed, and during said time the said Samuel Pollard constantly grew worse and more enfeebled and unable to leave his bed, and said disease affected his mind and weakened his will power. That at this time the said Samuel Pollard was indebted to various persons in and about the sum of $500.00, and was negotiating with William Tynon for a loan on said real estate for said amount, with which to pay said indebtedness. That the creditors of the said Samuel Pollard were insisting on the payment of the various claims, greatly worrying the said Samuel Pollard in his then enfeebled condition, and causing him to be very desirous of making said loan. That, to prevent the said Samuel Pollard from executing the said deed, the said Mary Jane Pollard represented to him that the execution of said deed would prevent the making of said loan, and requested him to convey the land to her, and that she would make said loan and obtain said money and pay said debts, and for him to rely upon her; that she would carry out his intentions as to the disposition of said lands as hereinbefore set forth, and that she would in all things carry out his desires in regard to said land, and would hold the same during her life, and would before her death convey the fee-simple title thereof to this plaintiff. That by said representations she prevented the said Samuel Pollard from executing said deed conveying said land to this plaintiff, or by other deed or will conveying it to this plaintiff, and induced him to rely upon her to carry out his intentions in regard to the disposition of said land as above set forth. That, while the said Samuel Pollard was in a very weak physical and mental condition, the said Mary Jane Pollard had prepared certain deeds conveying said real estate in fee to her, and the said Samuel Pollard, through said representations and statements made to him by the said Mary Jane Pollard, relied upon her to carry out his above set forth desires and intentions as to the disposition of said real estate above described, and did by said deed of conveyance, using this plaintiff as a conduit, convey said real estate to said Mary Jane Pollard. That this plaintiff, relying upon the statements and representations of said Mary Jane Pollard, and having confidence in her, and believing that she would carry out the intentions of said Samuel Pollard, consented to act as a conduit for the conveyance of said land from the said Samuel Pollard to the said Mary Jane Pollard. That said deeds were duly executed and recorded. That said land at said time was of the value of $4,000.00. That the $500.00 mentioned in said deeds was only a pretended consideration, and was never intended to be paid, and no part thereof was ever paid, and that the only consideration of said deeds was the agreement herein set forth. That on June 26, 1901, the said Mary Jane Pollard died. That from the time of the death of the said Samuel Pollard to her death the said Mary Jane Pollard held a life estate in said land, and during all of said time received the rents and profits of said land, and during all of the said time held the fee in said land in trust for this plaintiff under and by virtue of said agreement with said Samuel Pollard. That during all of this time this plaintiff believed and relied upon the said Mary Jane Pollard fulfilling and carrying out said agreement. That since the death of said Mary Jane Pollard the defendant Millie Junietta McKenney has presented and offered for probate a pretended will of the said Mary Jane Pollard, and the same is now pending in the county court of Nemaha county, Nebraska, which said will purports to convey said above-described real estate to the above-mentioned defendants. A copy of the said pretended will is hereto attached, marked 'Exhibit A,' and made a part of this petition. That during the lifetime of the said Mary Jane Pollard she neglected and failed to carry out the intentions of the said Samuel Pollard as to conveying said real estate to this plaintiff, and failed and neglected to carry out said agreement as above set forth, and never aliened or conveyed said real estate, other than the conveyance thereof purported to have been made in said pretended will, and by the said will the said Mary Jane Pollard attempted to violate said trust, and to convey said real estate to said defendants, and to deprive this plaintiff of any title thereto or estate therein. That at all times since the death of his father this plaintiff was and now is the equitable owner and entitled to the fee in and to all of said real estate. That said Mary Jane Pollard only had a life estate in and to said land, and held the legal title in trust for this plaintiff. and that whatever title in and to said land that is now held by said defendants, any and all of them, either under said pretended will, or as heirs of said Mary Jane Pollard, is held in trust for this plaintiff, who is now the real and equitable owner of said land, and that said Mary Jane Pollard during her life frequently admitted said trust, and this plaintiff had full faith and unbounded confidence in the said Mary Jane Pollard, and fully believed she would faithfully execute said trust. That said defendants, either or none of them, have no right, title, or interest in or to said real estate, or any part thereof, other than a charge thereon of $1,000.00 payable to each of said Millie Junietta McKenney and Mary Eviline Dearborn, which said sums this plaintiff is now ready, able, and willing to pay according to the intentions of the said Samuel Pollard, and is now ready and in all things willing to carry out his part in fulfilling such intentions." The prayer is

Digitized by Google

that the plaintiff be declared the equitable owner of the land, that the purposes and intentions of Samuel Pollard in the premises be carried into effect, and for general relief.

The defendants filed general demurrers, which were sustained by the court. The plaintiff elected to stand on his petition, and a decree was entered accordingly. The case is here in error.

The argument in this case proceeds on the assumption that the agreement of the wife, Mary Jane Pollard, to carry out the intention of her husband in regard to the land, rested in parol. As this assumption is not inconsistent with the allegations of the petition, we proceed on the theory that such was the character of the agreement. The only question, then, in this case is whether the trust sought to be enforced falls within the provisions of chapter 32, commonly called the statute of frauds, which so far as concerns us now is as follows:

"Sec. 3. No estate or interest in land, other than leases for a term not exceeding one year, nor any trust or power over or concerning lands, or in any manner relating thereto, shall hereafter be created, granted, assigned, or surrendered or declared, unless by act or operation of law, or by deed or conveyance in writing, subscribed by the party creating, granting, assigning, surrendering, or declaring the same.

"Sec. 4. The preceding section shall not be construed to affect in any manner the power of a testator in the disposition of his real estate by a last will and testament, nor to prevent any trust from arising or being extinguished by implication or operation of law."

The language of section 3 is so clear and sweeping as to exclude the possibility of creating an express trust by parol. That section is not only an insuperable obstacle to the creation of a trust of that character by parol, but to thus creating a trust in any manner relating to land. In Hansen v. Berthelsen, 19 Neb. 433, 27 N. W. 423, it was held that an express trust cannot be raised by a parol promise to reconvey to the grantor. To the same effect was the following: O'Brien v. Gaslen, 20 Neb. 351, 30 N. W. 274; Dailey v. Kinsler, 31 Neb. 343, 47 N. W. 1045; Id., 35 Neb. 835, 53 N. W. 973; Thomas v. Churchill, 48 Neb. 266, 67 N. W. 182; Cameron v. Nelson, 57 Neb. 381, 77 N. W. 771. The principle applied in those cases applies with equal force to a parol promise to convey to a third party, because it would be an attempt to create an express trust by parol, and would contravene the provisions of section 3, supra. Such is the holding of the courts of other states, under statutory provisions similar to those quoted. Among the cases adhering to such rule are the following: Shafter v. Huntington (Mich.) 19 N. W. 11; Randall v. Constans, 33 Minn. 329, 23 N. W. 530; Fairchild v. Rasdall, 9 Wis. 379; Pavey v. Am. Ins. Co., 56 Wis. 221, 13 N. W. 925. From what has been said it necessarily follows, we think, that no express trust was raised by the parol promise of the wife to carry out the alleged intention of her husband as to the property in question.

But, by the express provisions of the fourth section, trusts arising by implication, or by operation of law, are excepted from the operation of the statute. Both resulting and constructive trusts obviously fall within the exception. Resulting trusts are such as are presumed or implied from the acts of the parties, as, where one man pays the purchase price for land and the deed is taken in the name of another, it is presumed that a trust was intended for the person who paid the money. Such trusts arise, result, or are implied from the contract and relations of the parties. The intention of the parties, as manifested in their contracts made in good faith, is the foundation of them. Perry on Trusts, § 166. But the presumption, arising from such contract and relations, is not conclusive, but may be rebutted by evidence showing a different intention. And where, as in the present case, the intention of the parties is clearly expressed, there is no room for presumption or implication, consequently there can be no resulting trust.

Closely allied to resulting trusts, and frequently confused with them, are the constructive trusts. This class of trusts arise from actual or constructive fraud or imposition committed by one party on another. Perry on Trusts, Id. Thus, if one person procures the legal title to property from another by fraud or misrepresentation, or an abuse of some influential or confidential relation, which he holds toward the owner of the legal title, to obtain such title from him upon more advantageous terms than he could otherwise have obtained it, the law constructs a trust in favor of the party upon whom the fraud or imposition has been practiced. Again, if a party obtain the legal title to property by virtue of a confidential relation, under such circumstances that he ought not, according to the rules of equity and good conscience as administered in chancery, to hold and enjoy the benefits, out of such circumstances or relations a court of equity will raise a trust by construction, and fasten it upon the conscience of the offending party, and convert him into a trustee of the legal title. Thompson v. Thompson, 16 Wis. 91; McLane v. Johnson, 43 Vt. 48; Hollingshead v. Simms, 51 Cal. 158.

There is little difficulty in applying the doctrine of constructive trusts in cases of actual fraud, but it is not always easy to determine whether a given transaction involves constructive fraud. The general doctrine of the courts is that a false representation, upon which fraud may be predicated, must be of an existing fact, or a fact alleged to exist at the time, and cannot consist of a mere promise to be performed in

Digitized by Google

the future. Jackson v. Cleveland, 15 Mich. 94, 90 Am. Dec. 266; Pres. & Trustees of Hartsville Uni. v. Hamilton, 34 Ind. 506; Noble v. State, 39 Ind. 352; State v. Prather, 44 Ind. 287; Adkins v. Adkins, 48 Ind. 12; Hayes v. Burkam, 51 Ind. 130; Reagan v. Hadley, 57 Ind. 509; Welsbillig v. Dienhart, 65 Ind. 94; Burt v. Bowles, 69 Ind. 1; Bethell v. Bethell, 92 Ind. 318; Gallager v. Brunel, 6 Cow. 347; Johnston v. LaMotte, 6 Rich. Eq. 347. But, if the intention not to perform the promise be shown to have existed at the time the promise was made, the promise is fraudulent, even in the absence of confidential relations between the parties. Christy v. Sill, 95 Pa. 387; Brison v. Brison, 75 Cal. 525, 17 Pac. 689, 7 Am. St. Rep. 189; Larmon v. Knight, 140 Ill. 232, 29 N. E. 1116, 33 Am. St. Rep. 229. In the last case the court holds that the existence of the evil intent at the time the promise was made may be inferred from the failure to comply with the promise, and that the promisor may be presumed to have intended, when he made the promise, to do what he finally did do. In Newton v. Taylor, 32 Ohio St. 399, it was held that where a party participates in bringing about the arrangement, induces the result, and takes in confidence what he cannot retain without bad faith, he becomes a trustee by virtue of his own wrongful acts, and the trust in such case may be proved by parol. In Brison v. Brison, supra, the court held, not only that a promise made with the intention of not performing it is fraudulent, but that the violation by the grantee of a promise to reconvey is constructively fraudulent, and gives rise to a constructive trust, which may be established by parol, if he obtains an absolute deed without consideration, by means of a parol agreement to reconvey to the grantor, to whom he stands in the confidential relation, even where there be no intention at the time not to perform the promise. In that case, as in this, the parties were husband and wife, and considerable stress is laid on the confidential relation of the parties. In holding that the absence of an intention not to perform the promise when it was made is immaterial, the court went further than was necessary to a decision, because the petition, as construed by the court, shows that the promise was made without any intention of performing it. But, in our opinion, the rule is nevertheless sound. A transaction of that character involves more than a mere breach of contract; there is also involved the element of confidence reposed by the grantor in one upon whom he had a right to rely, and a betrayal of such confidence.

In the present case the parties, as before stated, were husband and wife. The conveyance was made at the solicitation and instigation of the latter, during the last illness of her husband, when he was both physically and mentally weak, and under circumstances well calculated to strengthen the influence of his wife over his conduct. By virtue of her relationship and consequent influence, and upon the strength of her promise to carry out his intentions with respect to the property, the wife obtained the legal title. Such agreement she not only failed to perform, but repudiated by making an entirely different disposition of the land.

The rules, so far as we have stated them, announced in Brison v. Brison, Larmon v. Knight, and Newton v. Taylor, supra, meet our entire approval, and it seems to us that any one or more of them applied to the facts in this case will necessarily impress a trust upon the property in suit. It follows, therefore, that the demurrers should have been overruled.

What has been said disposes of the questions presented by the record, but, as the case goes back for trial, it may be proper to anticipate one of the questions which will confront the trial court. It appears to be assumed by the plaintiff that the relief in this case should be a decree giving effect to the intention of the parties, as shown by their agreement at the time of the conveyance, and to the testamentary intentions of the grantor. We are aware of authorities which seem to support that assumption, but we do not think they should control, in view of the sections of the statute of frauds, supra. Section 3 explicitly provides that no trust over or concerning land, or in any manner relating thereto, may be created by parol. It does not contemplate the existence of a right without a remedy, but excludes the idea of the existence of the right itself, unless created in the prescribed manner. To carry out the intention of the parties in this case would be to give effect to a contract which the statute in express terms declares shall be ineffective. Besides, it would be giving effect to the mere testamentary intentions of the grantor, whereas such intentions, except in the case of nuncupative wills, to be effective, must be expressed in the form of a will, duly executed. Section 127, c. 23, Comp. St. 1901. Moreover, as we have seen, the trust arises from the actual or constructive fraud of the grantee. The action, then, is for relief on the ground of fraud, and to compel the grantee, or those claiming under him, to surrender that which in equity and good conscience they are not permitted to retain. It might have been maintained by the grantor in his lifetime, upon a showing bringing the case within the rules hereinbefore stated and approved. Had it been brought by him, the relief granted would have been merely to place the parties in statu quo. Those claiming under him, it seems to us, are entitled to the same relief and no other or greater. The court may well deprive the defendants of the fruits of a fraudulent transaction, and still give force and effect to the statute of frauds. But if it go further, and carry out the intentions of the parties, as evidenced by their agreement, and the testamentary intentions of the grar

Digitized by Google

tor orally expressed, the statute of frauds and of wills become dead letters, because to carry out the intention of the parties to a contract is to enforce it, and to carry out testamentary intentions is to give effect to a will. That, in case the contract or will is not in writing, would be to do the very thing the statute says may not be done. If we are right thus far, it follows that the relief in this case should be limited to a cancellation of the conveyance whereby the wife acquired her husband's title to the land.

It is therefore recommended that the decree of the district court be reversed, and the cause remanded for further proceedings according to law.

BARNES and GLANVILLE, CC., concur.

PER CURIAM. For the reasons stated in the foregoing opinion, the decree of the district court is reversed, and the cause remanded for further proceedings according to law.

HILLERS v. YEISER et al.

(Supreme Court of Nebraska. Sept. 17, 1903.)

TAX DEED—EVIDENCE—AMOUNT OF LIENS.

1. Evidence examined, and *held* insufficient to sustain the judgment of the district court.

On rehearing.

For former opinions, see 91 N. W. 1126, and 93 N. W. 989.

OLDHAM, C. This case has been twice before this court. 91 N. W. 1126, and 93 N. W. 989. While the question of the sufficiency of the testimony to sustain the judgment was raised, our attention was never particularly called to the exact state of the record as to the total want of any evidence to show the amount paid, either by plaintiff or his assignee, for the tax certificates on which the action to foreclose was based. The plaintiff at the trial introduced the evidence of the purchaser of the tax-sale certificates, who testified that he was the purchaser, and that he assigned the certificates for a valuable consideration to the plaintiff in this action, and afterwards procured a tax deed on the certificates, and assigned that to the plaintiff. A paper purporting to be a tax deed executed by the county treasurer was introduced on plaintiff's behalf. This paper, however, merely described the lots, and does not recite any consideration as having been paid for them. This was all the evidence introduced tending to show the amount due plaintiff on his tax liens. It is therefore apparent that there is a total want of testimony in the record to show the amount of defendants' indebtedness, and, as the answer was a general denial, evidence of this nature is necessary to sustain a decree.

It is therefore recommended that the former judgment of this court be vacated, and that the judgment of the district court be reversed, and the cause remanded for further proceedings.

AMES and HASTINGS, CC., concur.

PER CURIAM. The conclusions reached by the Commissioners are approved, and, it appearing that the adoption of the recommendations made will result in a right decision of the cause, it is ordered that the former judgment of this court be vacated, and the judgment of the district court be reversed, and the cause remanded for further proceedings.

PARKINS v. MISSOURI PAC. RY. CO.

(Supreme Court of Nebraska. Sept. 1, 1903.)

TRIAL—INSTRUCTIONS—CONTRACT—ACTION FOR BREACH—EVIDENCE.

1. An abstract of pleadings with a statement that it was incumbent on plaintiff to prove all his material allegations which were denied, is not prejudicial, where the court by another instruction told the jury, preceding the statement by a "that is," precisely what the points in controversy were.

2. In an action to recover damages against a railroad company for refusing to carry out a contract to purchase gravel which was to be called for when wanted, and to be, in the judgment of the defendant's superintendent, suitable for ballasting the road, where the making of any objection for unsuitability is denied, it is asking too much to require plaintiff both to prove an offer of the gravel to which no objection on that ground was made during the life of the contract and also that the gravel was suitable.

3. The fact that another instruction of different purport was given does not do away with the error of one which absolutely requires unnecessary proof to enable plaintiff to recover.

Commissioners' Opinion. Department No. 1.

"Not to be officially reported."

On rehearing. Reversed.

HASTINGS, C. This case appears in 93 N. W. 197. Seven grounds for rehearing are set up in the motion: First, that the opinion proceeds on the ground that the contract was to furnish suitable ballasting, whereas it was merely to furnish such as should be suitable in the judgment of the defendant's superintendent; second, that the opinion is wrong in merely condemning the copying of the pleadings by way of statement of issues, and that it should have reversed the case because of it; third, because the opinion finds that it would not have been error to submit to the jury an issue made without objection in both pleadings and proof, namely, whether or not the gravel was suitable; fourth, the saying that the assignments of error in the admission and rejecting of testimony, 13 to 61 in the petition in error, are not specific enough, is wrong, notwithstanding the opinion says they were examined, and we are not now asked to re-examine them; fifth, that the review of the evidence contained in the opinion mistakes the real issue, substantially a reiteration of the first ground; sixth, that the opinion is wrong in finding no prejudicial error in leaving to the jury the determina-

Digitized by Google

tion as to what the material allegations of the petition are; and, seventh, that the opinion is wrong in finding no prejudicial error in paragraph 5 of the trial court's instructions.

So far as the first point is concerned, the trial court did not overlook the main issue. The former opinion says the issue as to the suitableness of the gravel was not submitted, but there would have been no error in submitting it, for it was made in the pleading, and evidence introduced as to it. Defendant had pleaded a rejection of the gravel as unsuitable, and alleged that it was so, and this had been denied in the reply. The contract on which the plaintiff was suing was to supply gravel suitable, in the judgment of defendant's superintendent, for ballast on defendant's road. The court, by its instruction 2, told the jury that the burden of proof is upon the plaintiff to establish by a preponderance of the evidence all of the material allegations in his petition which are denied by the defendant's answer; that a like burden was upon the defendant as to all the material allegations of new matter in the answer which were denied—"that is," the court goes on, "the plaintiff must prove his readiness and willingness to furnish to the defendant, under the terms of the contract, the remainder of the 50,000 cubic yards of gravel not delivered; second, that the same was suitable for ballasting purposes in the judgment of defendant's superintendent; third, the defendant must prove that he objected and refused to take the gravel as and for the reason he alleges, and so notified the plaintiff prior to October 5, 1895." It is conceded that the time for the performance of this contract was extended to October 5, 1895, by mutual agreement. The defense to plaintiff's claim for loss of profits in furnishing this gravel to the defendant is that the gravel was not suitable for ballasting purposes in the judgment of the defendant's superintendent, and that plaintiff was so notified, and that in fact it was not suitable. The trial court gave an extensive recital of the allegations of the petition, answer, and reply, many of which are totally immaterial, but he summed up the whole in this instruction 2 so as to present distinctly and plainly to the jury the precise issue which the plaintiff says was overlooked. Doubtless it is error to tell a jury that a party must prove all his material allegations, without also informing the jury what those allegations are. In this case it seems to have been done, however, with a brevity and plainness to which counsel did not suggest any improvement, and would, perhaps, have difficulty in doing so now. It seems to us that the statement of the single issue in this case is so clearly and concisely made here that it is not possible that the extended recital of the pleadings can have done any serious harm. The second ground for rehearing should be overruled.

The third point—that the issue of whether or not the gravel was suitable was submitted to the jury—will be considered in connection with the seventh one, the objection to instruction 5.

With regard to the fourth point, counsel complain that the opinion remarks that their allegations of error in the admitting and the refusing of testimony are not sufficiently specific. These allegations are that the court erred in permitting, or in refusing to allow, the reading of answers to interrogatories specified by number in depositions, and in permitting or rejecting answers to questions specifically numbered in the bill of exceptions, and still further identified by the page on which they occur. We do not ourselves perceive why these allegations are not specific enough if they in fact correspond with the numbering in the transcript. We have not taken the trouble to inquire whether they do or not. The court at the former hearing considered them, and there is no complaint now that they were not correctly determined at the former hearing.

The complaint that the review of the evidence is solely with reference to a false issue, namely, the actual suitability of the gravel for ballasting purposes, seems to rest upon the fact that counsel, now at least, rest their case upon a claim that no objection to the gravel was made during the life of the contract. It is true that the former opinion seems to assume that there was a rejection for unsuitability, and that the real question here is as to whether or not the rejection was sufficiently well founded. The complaint as to the quality of this gravel was admittedly made after the delivery of more than 20,000 of the 50,000 cubic yards. The notice to plaintiff of any rejection of the gravel as unsuitable is expressly denied, but the record discloses evidence at least tending to show that an objection was made on that specific ground before the time for accepting or rejecting the gravel had gone by. The jury, as we have seen by instruction 2, were explicitly told that, in order to establish this defense, the defendant must show that the gravel was objected to on this ground before the expiration of the contract. Of course, while the contract was to furnish gravel suitable, in the judgment of the defendant's superintendent, for ballasting purposes, that judgment must have been an honest one, made with reference to the quality, or the apparent quality, of the gravel.

The sixth complaint—that the second instruction given by the court on its own motion left the jury to ascertain for themselves what are the material allegations on either side—does not seem to us to be well founded. Doubtless the construction of the pleadings and the question as to what in them is material, and is not, is for the court. Doubtless it would be reversible error to tell the jury that all the material allegations of the party must be established, and not in-

Digitized by Google

form the jury what those material allegations are, but the instruction is explicit in defining what these material allegations are. It told the jury with great definiteness what was incumbent on each party to be proved.

The seventh point—that paragraph 5 of the court's charge is erroneous and unintelligible—is more serious. This instruction was in the following terms: "But if you believe from the evidence that the defendant did not prior to October 5, 1895, refuse to take any more gravel under the terms of the contract because unsuitable, in the judgment of its superintendent, for ballasting purposes for its railway, and that the ballast furnished under said contract was suitable for such purpose, then you should find for the plaintiff, provided you find that, and only to such an extent not exceeding the amount of gravel undelivered under the contract, as plaintiff was ready, willing, and able to deliver after the time the defendant claims he refused to take any more gravel, and before the termination of such contract, to wit, October 4, 1895, such as, in the judgment of the superintendent, would be fit for ballasting defendant's roadbed." It told the jury to find for plaintiff if there was no refusal of gravel prior to October 5, 1895, on the ground of unsuitability, and if in fact it was suitable for ballast. The rest of the instruction is not quite clear. It seems to have been intended to tell the jury what would be the measure of damages "provided you find that"; i. e., the lack of any refusal during the life of the contract and the suitableness of the gravel. It seems to have been wrong in that it limited plaintiff's recovery to the amount within the terms of the contract which he was ready to furnish, instead of a recovery only on condition of readiness to comply with the whole contract on his part. It was certainly wrong in failing to indicate whether the price of the undelivered gravel or the profits on it constituted the plaintiff's damages. Was it a fatal error for the court in this instruction to make the showing that plaintiff's gravel was suitable for ballast an indispensable condition of recovery, even though there had been no refusal? Plaintiff's contract was to furnish 50,000 cubic yards of gravel, when called for, before October 5, 1895. He was under no obligation to tender it. If he was ready to furnish it, during all the time of this contract and its extension, of the required quality, he would now be entitled to compensation. He says in his reply that he never had notice of any rejection of his gravel for lack of quality. He says in his testimony that he never learned of any complaint as to the quality of the gravel until the spring of 1896. It is true that Mr. Rathburn, the superintendent, says he had several conversations with plaintiff in the summer of 1895, in which he told the latter that the gravel would not answer for ballast. The witness Bush swears to hearing such a conversation, he thinks in June, certainly not later than July, of that year. Mr. C. M. Clark swears that by Mr. Rathburn's order, about July 24, 1895, he notified plaintiff that no more gravel would be received, because it was unfit for ballast. These witnesses, however, are all in defendant's employment. The jury was not bound to take their statement against the unsupported one of plaintiff, unless they found it easier to believe plaintiff was wrong than the three witnesses who contradicted him. It cannot be said that there is no evidence to go to a jury contradicting defendant's claim of a rejection of this gravel for lack of quality. Defendant had accepted at various times during the 2½ years before this alleged refusal about 12,000 yards of gravel from the Springfield pit, and about 8,000 yards from the Birkhouser pit, located about one-quarter of a mile from the first. It would seem that the defendant would be estopped to claim any defect in this gravel, unless plaintiff was notified of its refusal within the life of the contract. The trial court, however, in this instruction No. 5, required, as a condition of the rendition of any verdict for plaintiff, that he prove, not only that there was no refusal, but that his gravel was suitable for purposes of ballast. We are constrained to think that in requiring both the trial court asked too much. If there was a refusal, then proof that his gravel was clearly suitable for the required purpose, and the refusal arbitrary and unreasonable, would have been necessary. In the absence of any rejection within the life of the contract, such evidence could hardly be called for.

The final clause which is added to the instruction does not seem to aid it. As before stated this part of the instruction seems only to refer to the measure of damages. So far as it is intelligible, it seems to say that the gravel which plaintiff was able and willing to deliver must be of as good quality as that which was accepted without objection, and therefore was presumably suitable in the superintendent's judgment. Of course, there could be no other test if there was no rejection. But, whatever meaning is understood of this last clause, the first part of the instruction distinctly told the jury to find for plaintiff when he proved there was no refusal, and that his gravel was suitable for ballast. The requirement of both at once was prejudicial, and, it would seem, sufficiently so to entitle plaintiff to a new trial.

It is recommended that the judgment of affirmance be vacated, and the judgment of the district court reversed, and the cause remanded.

AMES and OLDHAM, CC., concur.

PER CURIAM. The conclusions reached by the Commissioners are approved, and, it appearing that the adoption of the recommendations made will result in a right decision of the cause, it is ordered that the judg-

Digitized by Google

ment of affirmance heretofore entered by this court be vacated, and the judgment of the district court reversed, and the cause remanded.

MERRILL RY. & LIGHTING CO. et al. v. CITY OF MERRILL et al.

(Supreme Court of Wisconsin. Sept. 29, 1903.)

TAXATION—EXEMPTIONS — STREET RAILWAY COMPANIES—PROPERTY LEASED—STATUTES—CONSTRUCTION.

1. Under Rev. St. 1898, § 1038, subd. 14, subjecting street railway companies to a charge on their gross revenues in lieu of other taxation, and exempting from taxation on the payment of such license fee all real estate owned and actually and necessarily used by the company in the operation of its business, real property leased by a street railway company, which has paid the license tax, for five years, and actually and necessarily used by it in the operation of its business, is exempt from general taxation.

2. Under Rev. St. 1898, § 1038, subd. 14, exempting from taxation property owned and actually used by a street railway company, where the company has leased realty which it is actually using in the operation of its business, the exemption cannot be treated as affecting merely the leasehold interest and subjecting the other interest to taxation.

Marshall, J., dissenting.

Appeal from Circuit Court, Lincoln County; W. C. Silverthorn, Judge.

Suit by Merrill Railway & Lighting Company and others against the city of Merrill and others to remove cloud and declare void a certain tax. From a judgment discharging the tax lien on the payment of a certain sum, defendants appeal. Affirmed.

The plaintiff company was the owner of and engaged in operating a street railway and electric lighting business in the city of Merrill. Its power plant having been destroyed, the individual plaintiffs, Cotter et al., who were principal stockholders, purchased a tract of land with water power appurtenant, and constructed thereon a power plant building, with connection with said water power and with a steam engine, and in May, 1899, rented indefinitely, and in September, 1900, by formal written lease, leased to the company for a period of five years, all except four acres of said tract of land, together with the dam and water power and all flowage privilege; reserving, however, as appurtenant to the four acres not leased, the right to use all water power in excess of the needs of the company. The company agreed to pay all taxes. Since May, 1899, the plant has been used and operated by the company to supply the electric power for its street railway and its lighting business. In 1900 the entire tract of land, including both that leased by the individual plaintiffs and that reserved, was treated as exempt by the taxing officers of Merrill, but in 1901 such entire tract was placed upon the tax roll, and assessed to the individual plaintiffs, its fee owners, at the value of $20,000, and was included in the general tax levy for both 1900 and 1901, against protest before the board of review that it was not taxable because it was a part of the entire plant and property of the railway and lighting company, which had paid license fees in lieu of all taxes, in compliance with the statutes relating to such property. The tax roll being returned to the city treasurer, this suit was brought by both the railway company and the owners of the land to remove the cloud and declare void the tax so far as it related to any land except the reserved four acres. The court having found the facts substantially as above stated, and decided that the land leased to the railway and lighting company was not subject to taxation, a division of values was made, and the proper tax upon the reserved four acres was ascertained by stipulation, and judgment entered declaring void the entire tax so levied and discharging the lien therefor upon payment of the proper amount of tax on the four acres; from which judgment the defendants appeal.

John Van Hecke, for appellants. Curtis & Reid, for respondents.

DODGE, J. (after stating the facts). Our statutes subjecting those engaged in operating street railways, with or without electric lighting and power plants, to a charge graduated upon their gross revenues, in lieu of other taxation, as a part of that scheme contain the provision (subdivision 14, § 1038) to the effect that upon payment of such license fee "all personal property, franchises, and real estate owned and actually and necessarily used by such person, company, or corporation in the operation of its business, shall be exempt from taxation and other license fees." Appellants claim that by the clear words of this statute such exemption is confined to real estate absolutely owned in fee simple, while respondents claim that it extends to include property held by lease, as in the present case. The question presented is without direct authority in Wisconsin, and in solving it we are driven to decide which of two rules are applicable; such rules being thoroughly well established in this state, so that little aid is obtainable from other jurisdictions where one or other of them has not been so fully adopted. On the one hand, it has been held in this state that statutes exempting property from the general rule of taxation are to be construed with the utmost strictness, and that, as so construed, the word "owned," in statutes describing exempt property, must receive its most limited meaning, and be satisfied only by complete and entire ownership, or at least not by leasehold title. Weston v. Shawano County Sup'rs, 44 Wis. 242, 256; Milwaukee v. Milwaukee County, 95 Wis. 424, 69 N. W. 819; Katzer v. Milwaukee, 104 Wis. 16, 80 N. W. 41; Douglas Co. Agric. Soc. v. Douglas County, 104 Wis. 429, 80 N. W. 940. On the other

Digitized by Google

hand, it is equally well settled that, where the statute in terms exempting property from general taxation is only a part of a general statutory scheme substituting a license or other impost in lieu of general taxation, the rule of strict construction has no application, but, on the contrary, such a statute is to be construed liberally in favor of the person required to pay taxes in the substituted license form. M. & St. P. Ry. v. Supervisors, 29 Wis. 116; Same v. Milwaukee, 34 Wis. 271, 277; State ex rel. Abbot v. McFetridge, 64 Wis. 130, 24 N. W. 140; Milwaukee E. R. & L. Co. v. Milwaukee, 95 Wis. 39, 47, 69 N. W. 794, 36 L. R. A. 45, 60 Am. St. Rep. 81; Duluth, etc., Ry. Co. v. Douglas County, 103 Wis. 75, 88, 79 N. W. 34. It cannot be denied that the word "own" is used both colloquially and in the law to designate a great variety of interests in property. As titles and rights to real property vary from the absolute and unqualified fee simple to that of the mere occupant, so the word "own" or "ownership" varies in its significance. For most practical purposes the tenant under a lease for 1,000, or even for 100, years exercises as complete control as the holder of the fee simple. The holder of a fee subject to be determined on some remote contingency, or the holder of a life estate, satisfies the ordinary conception of ownership, but the gradations from this phase of partial ownership to that of the mere tenant from month to month are nearly infinite in number, and each almost infinitesimal in degree. It seems, therefore, quite impossible to draw any line logically between the absolute and unqualified fee simple on the one hand and the mere right of occupancy on the other. Hence it is not surprising that we find the word in statutes given the widest variety of construction, usually guided in some measure by the objects sought to be accomplished in the particular instance. This has led some courts to declare that the word has no precise legal signification, and may be applied to any defined interest in real estate. Gitchell v. Kreidler, 84 Mo. 476. It has been applied to a mere bailee in construing log-driving lien statutes in Wisconsin. Section 3337, Rev. St. 1898; Wis. R. L. D. Ass'n v. Comstock Lumber Co., 72 Wis. 464, 40 N. W. 146, 1 L. R. A. 717. The instances where the word "own" has been held satisfied by something less than absolute and entire ownership are far too numerous to permit citation. The following are a few in which mere leasehold interest has been deemed sufficient: Gilligan v. Board, 11 R. I. 258; State v. Wyl, 55 Mo. 67; Proctor v. Railway, 64 Mo. 112; Choteau v. Thompson, 2 Ohio St. 114; B. & O. Ry. v. Walker, 45 Ohio St. 577, 16 N. E. 475; N. P. Ry. v. Davis, 26 Pa. 238; Schott v. Harvey, 105 Pa. 222, 228, 51 Am. Rep. 201; Eglinton v. Norman, 46 L. J. Q. B. 557; Mourilyan v. Labalmondiere, 30 L. J. M. C. 95. Thus it appears very clearly that the word "owned" is not a technical term; that it is a general expression to describe a great variety of interests, and may vary in significance according to context and subject-matter. That being so, we are constrained by the rule of the Wisconsin authorities to give to it in the statute now under consideration as liberal construction as it will reasonably bear in favor of the respondent company, which has paid the full license fee imposed by law in lieu of all other taxes. The applicability of this rule requiring liberality of construction of course renders nonauthoritative the cases where, as expressly declared, the court was bound to adopt the most strict and limited meaning of which the same word was capable.

In the light of these rules for construction, then, we have to consider whether the Legislature can in reason be supposed to have used the word "owned" in so general a sense as to be satisfied by a leasehold right for a term of five years. The purpose of this whole scheme was to measure the contribution of street railways to the public revenues by the earning capacity of their plants as entireties, recognizing that such plants include many elements which are peculiarly intangible and difficult of valuation by ordinary methods, such as the franchises to do business; the privileges to use highways and public grounds; the questionable title to the structures affixed to such realty and consequent difficulty of valuation specifically; the uncertainty, if not absence, of sale value of each element of the plant, except as used in connection with every other part, and in connection with the special franchises and privileges. It seems to us entirely probable that the Legislature intended in a general way to exempt from specific assessment and taxation those things which, in association with each other, help to produce the gross revenue on which the license fee is to be measured. In this view it is difficult to see why leased property should not fall within the purpose of the exemption as readily as that owned absolutely, while actually used for the purposes of the enterprise. What difference would it make that his power plant had been purchased? Such fact would neither enhance nor diminish the gross earnings of the entire plant, nor the contribution thereto of this particular property. Why should the legislators care whether the dynamos in the power house or the motors on the cars were owned or leased? In either case they contribute equally to produce the revenue on which the license fee is graded. A further consideration arises out of the general public policy that the entire plant should not be subject to enforced disintegration or severance by process of law. This policy has been so emphatically declared, and the reasons for it so fully explained, that we need only refer to its existence. Wilkinson v. Hoffman, 61 Wis. 637, 21 N. W. 816; Fond du Lac W. Co. v. Fond du Lac, 82 Wis. 322, 52 N. W. 439, 16 L. R.

Digitized by Google

A. 581; Chapman V. Co. v. Oconto W. Co., 89 Wis. 264, 60 N. W. 1004, 46 Am. St. Rep. 830; State ex rel. v. Anderson, 90 Wis. 550, 562, 63 N. W. 746. Is it not probable that a public policy so important that it has been held sufficient to impliedly repeal or restrain statutes regulating the enforcement of mechanics' liens and the execution of judgments should have been deemed a sufficient reason why even leased property, constituting an integral part of a railway plant and system, should not be subject to be wrenched from such association by the process of sale provided for collection of taxes laid on specific realty? Other considerations might be urged, but those suggested are sufficient to show that the use of the word "owned" in a sense to be satisfied by a leaseholding is not so unreasonable as to be unwarranted under the rule of liberal construction which must guide us. We accordingly hold that at the time of the assessment and levy of the taxes assailed the power plant and water power, except so much of the latter as was reserved in appurtenance to the other lands of the fee owners, was "owned and actually and necessarily used" by the plaintiff corporation "in the operation of its business," within the meaning of those words in subdivision 14, § 1038, Rev. St. 1898, and was, therefore, not subject to general taxation.

A suggestion is made by appellants that this exemption statute might be satisfied by a severance of titles in the specific real estate, and by treating as exempt merely the leasehold interest of the street railway company, and subjecting the other interests to general taxation. Such severance would be wholly foreign to the general scope and policy of our laws for taxation of real estate, and would render unworkable those providing for enforced collection. Wherever the tax statutes deal with real property, they refer to the land itself. The tax is laid thereon regardless of either the manner or extent in which title thereto is divided, and the enforcement statutes are all predicated upon the idea that the sale is to cut to the bottom, to carry the ultimate and fundamental title; and those statutes require that, if there is to be any severance upon the sale, it must be of portions of the land itself, so that to whatever is sold complete title shall pass. The same suggestion now made by appellants is discussed and disposed of adversely in Baltimore v. Canton Co., 63 Md. 218, 235; Sisters of Charity v. Detroit, 9 Mich. 94, 102; Burroughs, Taxation, p. 223. We are convinced that the rules of construction heretofore adopted by this court warranted the trial court in holding this parcel of land exempt, and that the judgment is right.

Judgment affirmed.

MARSHALL, J. (dissenting). I cannot concur in the conclusion in this case. The court seems to have so plainly fallen into error that argument is unnecessary to demonstrate it; that the exact situation needs but to be clearly stated. I take no exception to the view that in case of a license fee system of taxation as to specific property, as that of a railway company, made to take the place of the general system applicable to other property, the law in that regard should be liberally construed, if necessary, so as to include all property which would be taxable by such general system to the railway company if it were not for such license method. To go further, however, and include property taxable to other persons under such general system and justify it by the power of the court to judicially construe, goes outside the limits of such power into that of legislation.

I may not get the judicial idea intended to be expressed in the opinion of the court; but to avoid one doing violence to words under the guise of construction I must conclude that my Brethren do not claim that subdivision 14, § 1038, Rev. St. 1898, was intended to do more than render property, which would in the absence of the statute be directly taxable to the railway company, in lieu thereof taxable indirectly under the license fee system. To that extent, it seems, the law voices its purpose too plainly to admit of any attempt to construe it. If the court had viewed the case presented in that light and determined first the question of whether the power plant, of which the railway company was a mere lessee, would in the absence of the fee system of taxing its property be taxable to it, the question of whether the word "owner" as used in the law means more than absolute ownership would have been immaterial. Passing over the fundamental question, as it seems the court did, the case was made to turn wholly on the meaning of the word "owner." I assume that no one will question that, if it were not for the section of the statute under consideration, realty circumstanced as that in question would be taxable to the landlord under section 1043; and that if the former section were repealed it would be so taxable. Then the court has extended subdivision 14, § 1038, beyond its legitimate scope by applying it to property not taxable by such system to the railway company before the enactment.

The mere statement of those propositions, to my mind, as before indicated, clearly shows that a mistake has been made, and that the judgment of the circuit court should be reversed.

CITY OF ASHLAND v. NORTHERN PAC. RY. CO.

(Supreme Court of Wisconsin. Sept. 29, 1903.)

MUNICIPAL CORPORATIONS—STREETS—VACATION—ORDINANCES—REPEAL—ESTOPPEL.

1. Where a city passed an ordinance vacating certain streets under an agreement with certain railroad companies, but the ordinance was there-

after repealed before the railroad companies had acted thereon, or made material expenditures relying on such vacation, the city was not estopped from claiming the streets so vacated as a highway.

Cassoday, C. J., and Marshall, J., dissenting.

Appeal from Circuit Court, Ashland County; James O'Neill, Judge.

Suit by the city of Ashland against the Northern Pacific Railway Company to restrain defendant from obstructing certain streets. From a decree in favor of plaintiff, defendant appeals. Affirmed.

This is a companion suit to that presented in Ashland v. Chicago & Northwestern Ry. Co., 105 Wis. 398, 80 N. W. 1101. To the statement of facts there made we now refer. A clear understanding of the situation, however, requires a little more amplification of the facts. The three railroad companies, or their predecessors, the Chicago & Northwestern, Northern Pacific, and Wisconsin Central, some time prior to 1887 owned a large tract of land in Ashland between Third street on the north and Sixth street on the south, and between Vaughn avenue on the west and Prentice avenue on the east, a distance of seven blocks east and west, which had been largely donated to them by the individual owners, and in that space had their depots, as also did the present defendant and the Wisconsin Central have their yards. The business part of the city stretched along Front street and Second street, and also along the lake shore, where the mills were situated; the most central part of that business portion being at about Third Avenue West. Meanwhile a considerable residence settlement had grown up to the south of this railway tract, access from which to the business portion would naturally be attained over the various avenues, including Second, Third, and Fourth Avenues West. The scheme of vacating streets and alleys embraced in the contract of October 1, 1887, and in the ordinance of December 1, 1887, involved the vacating of all the avenues through this tract except Ellis avenue and Third Avenue West, thereby cutting off the use of Second and Fourth Avenues West and of Second and Third Avenues East. Ellis avenue was to be a thoroughfare. Third Avenue West was not affected, but has since been wholly obstructed by a stone passenger station. At the time of the commencement of this action the three railroad companies had quite extensive switching yards within this tract, each of them having five, six, or seven tracks crossing the avenues and substantially occupying Fourth and Fifth streets, and the defendant having put in place a roundhouse, small repair shops, and some other structures. To what extent this was an increase over what existed prior to 1887 is not proved, but the case was argued on both sides on the assumption that a very considerable amount of the expenditure had been since that time. But there was no proof that any part thereof had been made prior to the ordinance of June 26, 1888, repealing the vacating ordinance of the December previous. The present action affects both Second and Fourth Avenues West. There was no evidence that the defendant had erected any structures in either of these avenues, except as it had laid tracks across the same; nor was there evidence that any of the railroads had any structures in either of these streets, except that the Wisconsin Central freighthouse extended nearly across Second avenue, but that had been erected prior to 1887. The evidence is substantially undisputed to the effect that the opening and use of these two avenues for general travel will seriously incommode the railroad companies in the use of this territory for yard purposes; perhaps to an extent to force them to find other locations for their yards. There is also evidence that the Wisconsin Central has erected upon Third avenue an expensive passenger station, but not in reliance upon the claimed vacation of 1887. Whether by other authority, is not made to appear. There is no evidence as to whether the defendant did or did not have notice of the passage of the repealing ordinance of June, 1888, but it was stipulated that it was duly published, as required by the charter, on June 30, 1888. The court found as a fact that between October 1, 1887, and September 9, 1888, no step was taken, and no act performed, money expended, or obligation incurred, by the defendant in reliance upon or induced by the passage of the vacating ordinance of December 1, 1887, or other acts of the common council of the city of Ashland or of the plaintiff, growing out of or connected with the proposition of October 1, 1887; but that the defendant paid to the treasurer on September 9, 1888, $2,307.32, as its part of the cost of excavating Vaughn avenue and constructing a drain or box culvert therein. Judgment was entered in favor of the plaintiff, the result of which was to command the defendant to behave toward Second and Fourth avenues as if they were streets, instead of as if they were its property. From that judgment the defendant appeals.

Louis Hanitch, for appellant. M. E. Dillon and F. J. Colignon, for respondent.

DODGE, J. (after stating the facts). This case, having been presented in two arguments, has been carefully examined and reexamined, to ascertain whether it is distinguishable from Ashland v. C. & N. W. Ry., 105 Wis. 398, 80 N. W. 1101, so as to take it out of the rule established in that case. We find nothing of material distinction. The two actions, as also another against the Wisconsin Central Railway, were commenced at the same time, and issue joined by practically identical pleadings. The alleged contract between the railroads and the city and the action of the council and the citizens with reference to the streets relied on by app

Digitized by Google

lant are common to both actions. The proof as to occupation of the streets and intervening blocks and expenditure of money thereon is for all legal purposes the same, although carried somewhat more into detail in this action. The time when any of the acts were done or expenditures incurred with reference to dates of ordinance purporting to vacate the streets and the repeal thereof is left no less vague now than it was in the former case. The proof of acts by the citizens and by city officers by way of insistence upon right of passage and of maintaining sidewalks on Fourth avenue is, if anything, stronger and more definite in this record, as also is the proof that defendant had already established its depot and yards in their present locality before any of the acts on the part of the city council now urged as ground for belief in the abandonment of the streets. It is also made more clearly apparent that the portion of Fourth avenue on which an engine house and certain other city offices were built—some before and some after 1887—was not included in the vacation contract or ordinance. The only material distinction consists in that the trial court in the former case decided that facts were established to warrant a court of equity in arousing equitable estoppel, while in this case the trial court has decided the other way. In the Northwestern Case we were obliged to decide that there was a clear preponderance of evidence against such a state of facts as would justify estoppel, while in the instant case we need only to find absence of clear preponderance in favor of such state of facts. As a result of such comparison of the two cases we cannot but consider this ruled by the former, and affirm the present judgment, if the rule stare decisis is to control.

Some attempt—though in justice to appellant's counsel we must concede not a very urgent one—is made to assert that we held in the former case that the illegal action of the city council in contracting to vacate and in enacting vacating ordinance could not be given weight in deciding whether the conduct of the city and of the appellant had been such that the former must be held estopped to insist on the existence of these streets, and upon such assertion to predicate an argument against the soundness of the doctrine. We find no such position taken, as is apparent from the opinion, properly understood in the light of the discussion in the case. We—for our lamented Brother, Bardeen, J., spoke for the court, and with its hearty approval—first declared reaffirmation of the doctrine of Goodrich v. Milwaukee, 24 Wis. 422, 436, and Paine L. Co. v. Oshkosh, 89 Wis. 449, 61 N. W. 1108, that acts and conduct on the part of a city might be such as to arouse equitable estoppel. Then we turned to the principal argument of the railway company's counsel—that, because the company paid money for grading Vaughn avenue as a consideration for a pretended contract to vacate certain streets, the city was estopped; which, as evinced by the findings, was a principal consideration with the trial court. As to that we said that such an attempted contract is not sufficient, for the reasons there well stated. To hold otherwise would be to deny all efficacy to laws restricting powers of city officers; would place the public at the mercy of those who might by unprovable means, induce such officers to deliberately break such laws. We did not, however, declare that the attempted vacating of streets by a void ordinance might not be considered in association with other facts and circumstances, and the whole be held cogent enough to bring into operation an estoppel against a city. That we had no such intention is rendered plain by the very context of the opinion, pointing out that there was no clear and sufficient proof that the railway company had erected any structures or incurred any considerable expense in reliance upon that attempted vacation, they being chargeable with knowledge of its repeal. The necessity of proof of both the inequitable conduct of the city and great and irreparable wrong to parties honestly and in good faith relying thereon is well and properly declared. That is forcibly expressed by the courts of Illinois, on whose decisions the doctrine of Paine L. Co. v. Oshkosh, supra, largely rested. They have very recently had occasion to insist upon great caution in applying it. Catlett v. People, 151 Ill. 16, 24, 37 N. E. 855; De Kalb v. Luney, 193 Ill. 185, 190, 61 N. E. 1036; Shirk v. Chicago, 195 Ill. 298, 63 N. E. 193. See, also, Elliott on Streets (1st Ed.) p. 660. We find nothing in the rules of law laid down in Ashland v. C. & N. W. Ry. with which we cannot now agree, and therefore deem it controlling in the decision of the present case.

Judgment affirmed.

MARSHALL, J. (dissenting). If the decision of this case had been strictly confined, as it might well have been, to the single question of whether the finding of fact that appellant did not change its position on the faith of the vacating ordinance prior to the repeal thereof is against the clear preponderance of the evidence, I could concur with my Brethren. Through some oversight, difficult to understand, the facts upon which the defense of equitable estoppel was based found no place in the findings of the court, and no exceptions were preserved covering the omission. Nevertheless the cause was twice argued here as if the question were before us of whether the judgment is right in view of the facts so omitted from the findings. Counsel for appellant presented its side of the litigation as if proper exceptions were preserved, and counsel for respondent joined in that treatment of the appeal. A re-argument was ordered wholly as to the effect upon the judgment of the facts not covered by the findings. This court considered such

Digitized by Google

unfound facts, and upon the whole case decided that no equitable estoppel was established. In that situation I shall do as all others seem to have done,—treat the case as if proper exceptions were taken and preserved in the record, presenting the question of whether an equitable estoppel was established by the facts proved, not covered by the court's findings.

I concurred in the decision rendered in Ashland v. C. & N. W. R. Co., 105 Wis. 398, 80 N. W. 1101, not without serious misgivings as to its correctness. Reconsideration of the subject here involved, aided by a clearer presentation of the same facts in this case, satisfies me that error was there committed by reason of a failure to fully comprehend the scope of the doctrine of equitable estoppel as applied to municipalities. I will endeavor to analyze the former opinion and show wherein I deem it infirm. That done, there will be little need to discuss the reasoning of the court upon this occasion, since it is not pretended that the present decision does more than affirm what was formerly decided.

Before proceeding to discuss the former opinion, however, I will state more fully than the court has done the facts of the case as I understand them to appear by the record. In my judgment the statement made by the court does not bring into clear light the strong circumstances from which arises a conviction that it would be unjust to compel the appellant to vacate the situation that it has occupied and enjoyed for some 16 years. The statement of facts now made is not supposed to be in any way contradictory to that made by the court, but rather to be supplementary thereto. The trouble with the court's statement, from my view of the case, is that it makes the vital question in the litigation, whether appellant did anything or failed to do anything under the vacation ordinance, so called, of December 1, 1887, before receiving notice that it had been repealed. The trial court so viewed the situation in the former case, as did also, in my judgment, this court upon the appeal. The same is obviously true of the trial of this case below. In my judgment such circumstances do not necessarily cut any figure in determining the rights of the parties.

Much of the territory within the limits of the city of Ashland is platted and occupied, and has been for many years. Within the territory affected by this litigation the streets cross each other at right angles, those extending back from Chequamegon Bay and nearly at right angles with the shore thereof being called avenues. Those crossing the same and running nearly parallel with the shore are called streets. The thoroughfare nearest to and parallel with the bay is called "Front Street," while those parallel therewith are numbered consecutively, commencing with Second street. Fourth avenue is one of the principal thoroughfares of the city. The width thereof is 66 feet. The platted blocks abutting thereon are 300 feet square. The cross streets are 66 feet wide. That part of the avenue particularly involved here is between Third and Sixth streets. Such avenue is one of the streets originally platted and dedicated. That occurred as early as 1857, and the avenue was then named "Madison Avenue." In 1887 the name was changed to "Fourth Avenue." It extended back from the bay in a southerly direction, through a thickly populated and business part of the city, about one and a half miles. Appellant's tracks extend across the territory between Third and Sixth streets, crossing Fourth avenue. That part of such avenue between Front and Third streets, prior to 1890, was prepared for public travel, and has since been used for that purpose. That part lying south of Sixth street was also, prior to 1890, so prepared, and has ever since been so used. Up to 1892 that part of the avenue between Third and Sixth streets had not been so improved, but the surface thereof was level and had been customarily used for travel. In 1892 the plaintiff built a sidewalk upon the west side of the avenue from Fourth street to Sixth street, which remained in place till February 9, 1897, when it was removed by defendant's predecessor. It has not since been restored. In 1895 defendant's predecessor constructed a railroad track through the corporate limits of plaintiff. About 1887 such track was connected with those of three other railroad companies within such limits, for the mutual convenience of all, to wit, the Northern Pacific Railway Company, defendant's predecessor, the Chicago, St. Paul, Minneapolis & Omaha Railway Company, the Milwaukee, Lake Shore & Western Railway Company, and the Wisconsin Central Railway Company. In 1887 those companies proposed to plaintiff to contribute $5,000 for the improvement of Vaughan avenue, a street running parallel with Fourth avenue and located two blocks and the width of one street westerly therefrom, on condition that the city should vacate portions of certain streets and alleys, including that part of Fourth avenue between Third and Sixth streets involved in this litigation. The offer was accepted by resolution of the city council. That resolution provided for the improvement of Vaughan avenue and the doing of much other work contemplated by the proposition of the railway companies. The resolution further provided that upon the contemplated improvements being made measures should be taken to vacate streets and alleys as suggested by the railway companies. December 1, 1887, pursuant to the agreement between the railway companies and the city thus made, the latter passed and caused to be published, intending to exhaust its jurisdiction in the premises, an ordinance in form vacating those parts of streets and alleys agreed to be vacated, including that part of Fourth avenue now involved. The

Digitized by Google

railway companies, within a reasonable time thereafter, complied with the agreement on their part as to paying the expense of improving Vaughan avenue. In 1888 plaintiff, treating that part of Fourth avenue which it had attempted to vacate as no longer a public thoroughfare, constructed a city building immediately south of Third street, entirely obstructing the avenue from such street north to the railway track. Appellant's predecessor, regarding the streets which the city had attempted to vacate as abandoned for public purposes, expended a large sum of money in the arrangement of its tracks and buildings for the purpose of conducting its business in the city, the outlay extending over a period of more than ten years. It will be irreparably damaged if the status of things thus created be now changed. The attitude of the city and people thereof prior to and at the time of, and for years subsequent to, the vacation proceedings, was such as to indicate a general desire that the railway companies should locate their yards, depot grounds and station facilities as they were located. The necessary result of such location, as could easily have been seen from the outset, was the obstruction of Fourth, Third and Second avenues between Third and Sixth streets, and the disuse thereof, within such territory, as public streets. Appellant's predecessor paid into the city treasury, as its proportion of the cost of improving Vaughan avenue as aforesaid, $2,307.32. The city has never repaid or offered to repay that money. The other railway companies paid their due proportion of the cost of the improvement as before indicated. Such improvement made necessary the incurrence of considerable expense in constructing a bridge for appellant's track over Vaughan avenue. All the companies laid out their yards and constructed their depots and station facilities with reference to the streets and alleys, obstructed as aforesaid, having been abandoned as ways for public travel. The attitude of the city, indicated by its placing its own buildings in the street, was continued in various ways. In 1890 it built an addition to the fire hall in Fourth avenue. In 1892 it constructed therein a storage shed west of the hall. The buildings at this time occupied nearly the whole width of the avenue. In 1892 it built a hay shed at the rear of the fire hall in the center of the avenue. In 1894 it moved a building into the avenue, where it has since remained and been used as a street commissioner's office. The vacation ordinance of 1887 was, June 26, 1888, in form repealed, but no personal notice thereof was ever given to the defendant's predecessor, nor was such predecessor distinctly notified that the city would insist upon restoring Fourth avenue to the public use where it was supposed to have been vacated or abandoned, till May 1901. That notification was not followed up by any disturbance of appellant. On the contrary, in 1895 the city and the citizens of Ashland requested the railway companies, in view of the streets having been vacated or the companies having been permitted to use the same as part of their depot grounds in the manner before stated, to remove their pile bridges over Vaughan avenue and replace them with steel structures. Defendant complied at an expense of $3,500. Since 1887 the railway companies have remained in undisturbed possession of the streets covered by the vacation proceedings, and during all that time have proceeded openly with the work of arranging tracks and other station facilities, expending in doing so the following sums: Defendant, about $30,000. The Chicago & North-Western Railway Company, $50,000. The Wisconsin Central Railway Company, some $75,000. Part of such expense was incurred in the construction of an expensive stone depot, which entirely obstructs Third avenue. In the meantime Second avenue has been obstructed by a freight house, by the warehouse of the Armour Packing Company, and other structures. If it should now be held that defendant has no right to use Fourth avenue in any way inconsistent with the use thereof as a public street, it would be obliged to rearrange its entire station facilities, and suffer irreparable loss.

The foregoing shows that as early as 1887 appellant's predecessor and its associate railway companies, which included all the railway interests in one of the most important cities, as regards commerce, in the state, involving to a great extent investments of millions of dollars, and the people and governing authorities of such city evinced a desire that the station facilities of all of such railway companies should be located together within the corporate limits of such city, substantially as they were located, making necessary the interruption of the use of the streets now complained of. At the early date mentioned there was an occupancy of the streets in such a way as to plainly indicate that it was intended to be permanent, and to indicate to any fair-minded man that the conduct of the railway companies in that regard was grounded upon a supposed general consent thereto by all interested parties, public and private. From that time on till the commencement of this action, covering a period of some 13 years, there was not a moment that the city and every citizen thereof specially interested did not have a cause of action against appellant's predecessor and also against its associate railway companies on account of the encroachment of the streets mentioned. Yet no move was made to seriously challenge their right to continue such occupancy. Not only was no such move made during that long period, but throughout the whole time there were affirmative acts by the city, and assent, by not objecting, to acts of private parties in treating the streets in question as abandoned as regards the public use thereof, such con-

Digitized by Google

duct on the whole being inconsistent with any other reasonable theory than that the city recognized the right of the railway companies to maintain their station facilities as arranged. During that period the improvements by the railway companies, to enable them to properly perform their quasi-public duties, exceeded $100,000; and the value of property within the city so increased that to change the location of the yards and make new arrangements to properly exercise the railway franchises, would entail not only loss of most of the money expended in the old location, but a very large sum in addition.

How radically the decision in the former case in the trial court and that upon appeal, and the decision in this case in the trial court and this as well, failed to apply to the entire situation thus pictured the broad doctrine of equity, that in dealing with the subject of whether the public should be held to have lost a right by reason of its having been superseded by an overpowering equity the chancellor does not look merely to lapse of time or any particular circumstance by itself, but to all the circumstances bearing on the question, the full scope of the inquiry being this: In view of the whole situation what does right and justice require (Paine L. Co. v. Oshkosh, 89 Wis. 449, 61 N. W. 1108), can best be made plain by showing by the findings in the two cases what the trial judges conceived were all the vital facts for equitable cognizance. Here is a synopsis of the findings in the first case, so far as they effect the subject of equitable estoppel: First, in 1887 the railway corporations and the city of Ashland agreed that the latter would vacate specific parts of streets and alleys, including that part of Fourth avenue in controversy, and in consideration thereof the former would pay the expenses of certain improvements of Vaughan avenue. Second, in December, 1887, the city in form by ordinance performed its part of said agreement. Third, in 1888 the city repealed the vacation ordinance. Fourth, the defendant's predecessor, relying upon the vacation proceedings, expended large sums of money in the construction of its yards and in paying for the improvement of Vaughan avenue. Conclusion: The city of Ashland is estopped from claiming that the said portion of Vaughan avenue in controversy is a public street.

Thus it will be seen that the whole case was made to depend on whether the railway companies, relying upon the validity of the vacation proceedings, were induced to occupy a position from which they could not recede without irreparable loss. The general attitude of the city and the public for a period of more than 10 years, indicating that the occupancy of the street by the railway companies was acquiesced in and regarded as permanent, and the expenditure by the railway companies of large sums of money, the expenditure extending over the whole period mentioned, without any attempt being made by the city or any private person interested to challenge the occupancy of the streets, were not taken notice of at all. As the case was decided, if the railway companies did not acquire an overpowering equity solely by reason of having acted on the faith of the vacation proceedings, they did not possess any such equity. It seems that argument is unnecessary to demonstrate that such a view excluded the most powerful factors in the case in building up an equitable right in favor of the railway companies. When the case came here the judicial vision was not in the least broadened, as will clearly appear from what follows.

Speaking of the basis for the equitable estoppel claimed, as this court understood the matter, it was said:

"The alleged estoppel is based upon the finding that the city and the railroad companies entered into an agreement by which the city agreed to vacate the street, and the companies to pay for certain specified improvements in other streets." Ashland v. C. & N. W. R. Co., 105 Wis. 398, 80 N. W. 1101 (page 403, 105 Wis., and page 1103, 80 N. W.).

The court then said, in effect, that no estoppel could legitimately rest on such an agreement for the following reasons: First. The railway companies knew that the city did not possess power to make the agreement. Second. The railway companies knew or were bound to know that the vacation proceedings were ultra vires and void. Third. The railway companies knew or were bound to know that the vacation ordinance was repealed on June 26, 1888. Fourth. There is no evidence that the railway companies took any action under the vacation ordinance prior to the repeal. Fifth. Whatever was done by the railway companies was done in reliance upon the void contract to vacate, which does not constitute a colorable basis for an equitable estoppel. General conclusion, based on the decided propositions: It appears neither that the city abandoned its right to the street, nor was guilty of any delay, nor did any act upon which the defendant railway company or its predecessor had a right to rely. That is, as I understand it, that the city was not guilty of any such delay, nor did any such act, because the defendant was bound to know that the agreement of the city to vacate the streets, and the vacation proceedings, were void. In that not only did the court overlook the real basis in the evidence for an equitable estoppel, but wrongly assumed, it seems, that merely because the vacation proceedings were void they could not form the basis for an equitable estoppel.

There is ample authority for the position that an ultra vires act, strictly so called, of a municipality, forms no legitimate basis for an equitable estoppel because of the presumption of law that every one knows the limitations upon corporate power. That does not apply to acts within corporate power, void

because of some illegal manner of execution. Such acts are commonly spoken of as ultra vires, but they are not so within the restricted meaning of that term applicable to the rule to which the court referred. That meaning is, "beyond the capacity of the corporation to do at all." 27 Am. & Eng. Ency. Law, 352, 353. When the corporation has power to act—it was conceded by the court the city of Ashland had power to vacate streets—but fails to exercise that power in a legal way, equities in favor of private parties may be based thereon. The difference between the two situations will be found on examination to be the key to the difference in results in cases where an equitable estoppel against a municipal corporation was asserted. In Snyder v. City of Mt. Pulaski, 176 Ill. 397, 52 N. E. 62, 44 L. R. A. 407, it was said that no equitable estoppel can arise from an act of municipal authorities without authority of law. In Seeger v. Mueller, 133 Ill. 86–95, 24 N. E. 513, the court said:

"No estoppel can ordinarily arise from the act of a municipal corporation or officer done in violation of or without authority of law. Every person is presumed to know the nature and extent of the powers of municipal officers, and therefore cannot be deemed to have been deceived or misled by acts done without legal authority."

It must be easily seen that the principle of those cases should not have been applied here, first, because the attempted vacation of the street was not an act beyond the scope of corporate power; and second, because the equitable estoppel was not dependent upon the vacation ordinance as a basis, but upon the general conduct of the city and all the circumstances whereby the railway companies finally came to the position from which they could not retire without irreparable loss. The equitable right of the railway companies might be sustained and the vacation ordinance and its repeal left entirely out of view. Here is the broad principle governing the matter, as stated by the Illinois court and approved by this court in Paine L. Co. v. Oshkosh, supra:

"Where the public have long withheld the assertion of control over streets, and private parties have been, by the acts of those representing the public, induced to believe the streets abandoned by the public, and on the faith of that belief, and with the acquiescence of those representing the public, they have placed themselves, by making structures or improvements in the street, in a situation where they must suffer pecuniary loss if those representing the public be allowed afterwards to allege that the street was not abandoned, the doctrine of equitable estoppel may be applied." Lee v. Town of Mound Station, 118 Ill. 304, 317, 8 N. E. 759.

It seems to me that the determination of the former case as if the equities of the railway company depended solely on whether they had any standing in a court of equity since their conduct was based on a void contract, is so clearly wrong that it should not stand in the way of a reconsideration of the whole subject upon this appeal.

The trial court in this case, guided by the decision upon the former appeal, very naturally overlooked everything bearing on the question of equitable estoppel except, first, whether the vacation proceedings were ultra vires, and second, whether any act was done by appellant on the faith of such vacation proceedings before the repealing ordinance. This court having said that the vacating ordinance was ultra vires and so could not be referred to as a basis for an equitable estoppel, the trial court of course felt bound to follow it. That of itself was fatal to appellant's position. There was but one other phase, as has been seen, which, within the limits of the former decision, could in any event cut any figure. That was whether appellant did anything or failed to do anything in good faith relying upon the validity of the vacation ordinance before the repeal thereof. That the court very properly felt bound by the former decision to decide in favor of respondent.

My Brethren, in endeavoring to meet one of my criticisms of the former decision, say:

"We did not declare that the attempted vacating of streets by a void ordinance might not be considered in association with other facts and circumstances, and the whole be held cogent enough to bring into operation an estoppel against the city. That we had no such intention is rendered plain by the very context of the opinion, pointing out that there was no clear and sufficient proof that the railway company had erected any structures or incurred any considerable expense in reliance upon that attempted vacation, they being chargeable with knowledge of its repeal."

I am unable to understand the former opinion that way, but whether the court's view be right or not it is manifest by the reasoning of my Brethren that they understand that the court on the former occasion went no further than to assume, without deciding, that acts might have been done by the railway companies in good faith relying upon the validity of the vacation proceedings, which would have given the companies a standing in a court of equity, but that they did no such acts. My own view is that the effect of the former opinion is this: The vacation ordinance was void; therefore no equitable estoppel could be predicated thereon. However, if the void ordinance could form the basis for an equitable estoppel upon proof being made that the railway company changed its position in reliance thereon, there was no such proof in the record. Neither formerly, nor on the present occasion did the court give due weight to all the circumstances characterizing the occupancy of the street by the railway companies, its

Digitized by Google

undisturbed character through a period of more than ten years, the positive acts of encouragement on the part of the city to continue occupancy by conducting the public affairs as if the streets occupied by the companies were no longer public thoroughfares, the final creation of a situation, the growth of which could have been easily stopped at the outset before any considerable outlay had been made by the railway companies, which cannot be retired from without enormous loss.

I need not say more to make my position appear clear. If I were to view this case from the narrow standpoint of whether the appellant in good faith changed its position relying upon the validity of the vacating ordinance, either before or after the repeal thereof, my conclusion would be in harmony with that of my Brethren. But looking at all the circumstances bearing upon appellant's right, it seems that one of the strongest cases is presented upon the record before us for the application of the doctrine of equitable estoppel that can be found in the books. As held in Paine L. Co. v. Oshkosh, the principal inquiry in all this class of cases is, in view of all the circumstances does justice require an equitable estoppel to be raised against the public?

CASSODAY, C. J. I concur in the opinion of my Brother MARSHALL.

STRAIT v. CITY OF EUREKA.

(Supreme Court of South Dakota. Oct. 7, 1903.)

MUNICIPAL CORPORATIONS—DEFECTIVE SIDEWALKS—PLEADING—OBJECTIONS AT TRIAL—DIRECTING VERDICT.

1. Where a complaint claiming damages for injuries sustained on a sidewalk is objected to on the introduction of evidence as not stating a cause of action, the Supreme Court, to sustain it, will indulge every reasonable presumption, and judicially notice that the statute requires incorporated cities to keep their streets in repair.

2. The court will entertain an objection at the trial that a pleading does not state facts to constitute a cause of action only when it is incapable of being made good by amendment.

3. A complaint in an action against a city for injuries on a sidewalk, alleging the defective condition of the walk, that the defect was known to the municipal officers, and that plaintiff was injured while passing along the walk, without any fault of his, is sufficient as against an objection at the trial that it does not state facts to constitute a cause of action.

4. Where an injury sustained by plaintiff never kept him from his place of business, or materially interfered with his usual employment, evidence, in an action to recover for loss of time, as to the damages sustained therefrom, is incompetent.

5. Where, in an action against a city for injuries on a defective sidewalk, the evidence fails to show the defendant's duty to keep the particular place in repair, or that its officers knew or might have known of the defect, with which plaintiff was familiar, a motion to direct a verdict for defendant should be granted.

¶ 2. See Pleading, vol. 39, Cent. Dig. § 1366.

Appeal from Circuit Court, McPherson County; Loring E. Gaffy, Judge.

Action by Dyer B. Strait against the city of Eureka. From a judgment for plaintiff, defendant appeals. Reversed.

G. N. Williamson, for appellant. L. T. Boucher, for respondent.

FULLER, J. By an exception to the action of the trial court in overruling the defendant's objection to the introduction of any testimony on the part of plaintiff, we are first called to determine whether facts sufficient to constitute a cause of action are stated in the following complaint: "That the defendant, city of Eureka, is a municipal corporation, organized under the law of this state approved March 6, 1890, the act being chapter 37 of the Session Laws of said year. That on the 10th day of October, 1901, and for more than a year prior thereto, the sidewalk of said city in front of the Merchants' Hotel on Market street in said city was and had been grossly defective in construction, rotten, and badly out of repair and dangerous. That said defects were well known to said city and to the mayor, marshal, policemen, and other officers of the defendant for more than a year prior to said date. That on October 10, 1901, the plaintiff, while passing along said sidewalk, without any fault or negligence on his part, stepped upon a short board or patch therein, which, being rotten, and negligently secured to an old and rotten stringer, turned over, and the plaintiff, without any fault of his, fell through the hole thus made, a distance of some three feet, to the ground below, and thereby greatly injured his foot, and otherwise injured his body, whereby he was caused great pain and suffering for more than a month thereafter, and from which he has not yet wholly recovered. The plaintiff, besides the pain which he suffered by reason of said accident, was thereby rendered unfit for work or business for more than thirty days, to his damage in the sum of three hundred dollars. Wherefore the plaintiff prays judgment in his favor and against the defendant in the sum of three hundred dollars, and for his costs and disbursements herein." One who pleads to the merits and goes to trial without demurring greatly impairs his right to question the sufficiency of facts stated in a complaint by objecting to the introduction of any evidence. It is only when a pleading is incapable of being made good by amendment that the court should entertain the objection here relied upon. Stutsman County v. Mansfield, 5 Dak. 78, 37 N. W. 304; Johnson v. Burnside, 3 S. D. 230, 52 N. W. 1057; Anderson v. Alseth, 6 S. D. 566, 62 N. W. 435. To sustain a complaint first objected to at the trial on the ground that facts sufficient to constitute a cause of action are not stated, this court will indulge every reasonable presumption, and judicially r-

Digitized by Google

that the statute makes it the duty of incorporated cities and towns to keep their sidewalks in good repair. In the absence of a demurrer, or motion to make more definite and certain, the objection was properly overruled. First upon all the testimony offered in support of the complaint, and again when both sides had rested, counsel for the city moved for the direction of a verdict as follows: "First. That there is no evidence to show that the city or any of its officers had any notice or knowledge of any defect in the sidewalk where the plaintiff is alleged to have been injured at or before the alleged injury. Second. That there is no evidence to show that the sidewalk upon which the plaintiff claims to have been injured was a public sidewalk of the city of Eureka, and under the control and charge of the officers of the city as such. Third. For the reason that the evidence shows that the only person who had any knowledge of any defect in the sidewalk at the time of the alleged injury was the plaintiff, and that said plaintiff, according to his own testimony, knew at the time of the injury, and for a long time prior thereto, the condition of this particular board that he stepped upon, and had full knowledge of its then condition, and was guilty of contributory negligence. Fourth. For the reason that there is no competent evidence here in this case to show that the plaintiff suffered any damage whatever by reason of the alleged injury sought to be recovered for, there not being any evidence to show that during any of this time he was prevented from carrying on his usual avocation; and the evidence does in fact show that he carried on his usual avocation during all the time sought to be recovered for." By reason of physical infirmities it appears from the undisputed testimony that plaintiff prior to and at the time mentioned in the complaint walked with crutches, and without their use was unable to stand. A sidewalk in good repair and five feet in width was maintained along the street in front of the hotel where plaintiff, by falling, sprained his right ankle and sustained a slight injury to one of his wrists. The accident appears to have been occasioned by the turning of a plank averaging about four inches in width and three feet long, upon which he had placed one crutch and his right foot in stepping aside to let another person pass. He had been rooming at this hotel for many years, and was thoroughly familiar with this strip of patchwork three feet in width leading from the inner portion of the walk to the building. In fact, he had fallen there at another time; and for the reason that it was always difficult for him to sustain the equilibrium of his body he had fallen many times on sidewalks that were in perfect condition. On his own behalf plaintiff testified in part as follows: "At the time of the accident I was police justice of the city of Eureka. At the time of the accident I knew of the defective sidewalk, and had known of it a long time prior thereto. There was on the outside of the sidewalk, next to the street, a strip of sidewalk five feet wide that was in good repair. The portion that I speak about as having been injured upon was a patch joined onto the five-foot boards, and extending from the five foot that was in good repair up to the building. It was a patch three feet wide on the inside of the walk. That was filled up when the Merchants' Hotel was raised from the level of the ground to the grade as established by the city. And before the hotel was raised there were three steps leading down into the Merchants' Hotel from the eight-foot sidewalk. The steps run down with the sidewalk. When the hotel was raised to the grade, they filled in these steps from the five-foot walk by putting boards in there three feet long. I came on there, and my crutch and foot fell through. My foot went down through. I never bear my weight upon my crutches unless I slip. I bear all my weight upon my feet; none upon the crutch. I can walk without crutches, but when I stop I can't balance. When I came along here I put my crutch upon the board, and it turned with me." The action being instituted merely to recover for the loss of time caused by an injury which the evidence shows never kept plaintiff from his place of business or materially interfered with his usual employment, the only testimony concerning damages was fatally incompetent for the reasons stated in the objection to the question by which the same was elicited, as follows: "Mr. Boucher: I will ask you what damage you sustained by reason of the loss of time which you incurred as a result of that accident? Mr. Williamson: That is objected to as incompetent, irrelevant, and immaterial, no foundation laid, and calling for a conclusion of the witness. (Objection overruled; to which ruling defendant duly excepted.) Well, I think about $200." In the absence of anything to show that it was the legal duty of the defendant to keep that particular place in repair, or that its officers knew or might have known of the latent defect in the nailing of the narrow strip of plank, which the crutch caused to turn, and with the exact condition of which plaintiff had been long familiar, we cannot indulge the forbidden presumption of negligence on the part of the municipal authorities. Upon the record the motion to direct a verdict should have been entertained.

The judgment appealed from is therefore reversed, and the case remanded for further proceedings.

Digitized by Google

BLACK v. LINN et al.

(Supreme Court of South Dakota. Oct. 7, 1903.)

OFFICERS—SOLDIERS' HOME—DISCHARGE OF MEMBERS—COMMISSIONERS—TORTS —PERSONAL LIABILITY.

1. The commissioners of the Soldiers' Home, vested by the Legislature with discretionary power to govern that institution, and to adopt rules and appoint a commandant, are personally liable in damages if they wrongfully and maliciously expel a member and deprive him of his rights.

2. Members of the State Soldiers' Home are subject to all regulations deemed essential to good discipline, and may be dishonorably discharged for refractory or unbecoming conduct.

Haney, P. J., dissenting.

Appeal from Circuit Court, Fall River County; Levi McGee, Judge.

Action by William Black against Arthur Linn and others. Judgment for defendants, and from an order refusing a new trial plaintiff appeals. Reversed.

Wilson & Wilson, for appellant. Kellar & Kellar, for respondents.

FULLER, J. Plaintiff, an honorably discharged Union veteran, brought this action against the commandant and commissioners of the South Dakota Soldiers' Home to recover damages arising from a grievance stated in his complaint as follows: "That the said defendants, on the 24th day of May, 1900, without cause, wickedly and maliciously, with intention to injure this plaintiff, issued an order dishonorably discharging this plaintiff from said South Dakota Soldiers' Home, and did wickedly and maliciously, by force and threats, and against plaintiff's will, and by violence, remove the said plaintiff from the said Soldiers' Home, thereby depriving him, the said plaintiff, from further enjoying the privileges, immunities, and benefits which he was and is entitled to as a member of said home, and so continue still to deprive said plaintiff from his membership in said home, contrary to his will, and without his consent." As declared by the Legislature, the object of the institution is to provide a home and subsistence for disabled soldiers, such as plaintiff, and its general supervision and government is vested in a board of five commissioners, having power to adopt rules and appoint a commandant to serve during their pleasure. Being thus given authority to exercise judgment and discretion in the performance of duties imposed by statute, it was held at the trial that the defendants are not personally liable for damages resulting from any of their official acts. Consistent with such a view, and on the ground that the facts stated in the complaint do not constitute a cause of action, the trial court, after rejecting all evidence offered on the part of the plaintiff, directed a verdict in favor of defendants, and this appeal is from an order overruling a motion for a new trial.

In the absence of any evidence, and for the purposes of this appeal, it must be assumed that respondents maliciously, wickedly, and with the intention to injure appellant, wrongfully removed him from the home by means of a dishonorable discharge and the use of threats, force, and violence, to his damage in the sum for which judgment is demanded. It is not given to the courts to make such officers answer in damages on account of honest acts necessarily intrusted to their discretion by the Legislature, and public policy demands that they be protected from the consequences of erroneous judgment, although injury to an individual is thereby occasioned. The presumption being that all public officers act in the utmost good faith, the question is not whether the treatment of which appellant complains was right or wrong, but whether his dishonorable discharge and exclusion from the home was maliciously effected. If the respondents acted wantonly, and with the intent to injure appellant, rather than to honestly discharge a public duty, this action for damages is clearly maintainable. The rule sustained by the greater weight of well-reasoned authority is to the effect that public officers intrusted by law with the exercise of judgment and discretion are liable to a person injured as the result of their acts only when such acts are prompted by malice or corruption. Yealy et al. v. Fink, 43 Pa. 212, 82 Am. Dec. 556; Hannon v. Grizzard, 96 N. C. 293, 2 S. E. 600; Parkinson v. Parker, 48 Iowa, 667; McOsker v. Burrell, 55 Ind. 425; McCormick v. Burt et al., 95 Ill. 263, 35 Am. Rep. 163; Green v. Swift, 47 Cal. 536; Pike v. Megoun et al., 44 Mo. 491; Bailey v. Berkey (C. C.) 81 Fed. 737; Waldron v. Berry, 51 N. H. 136; Lee v. Huff, 61 Ark. 494, 33 S. W. 846; 23 Am. & Eng. Ency. of Law (2d Ed.) 375. Although the object attained in this instance was clearly within the exercise of warranted discretion, the alleged means and motives which produced it are not entitled to judicial sanction, nor the immunity afforded public officers from responding in damages to persons injured by their authorized acts. While members of the home are subject to all regulations deemed essential to good discipline, and may be dishonorably discharged for refractory or unbecoming conduct, they are not without a remedy in the nature of an action for damages against managing officers when injured by their willfully corrupt or malicious acts. The order appealed from is reversed, and the case remanded for further proceedings.

HANEY, P. J., dissenting.

Digitized by Google

In re BIGELOW.

MOODY COUNTY v. MINNEHAHA COUNTY.

(Supreme Court of South Dakota. Oct. 7, 1903.)

INSANE PERSONS—LEGAL SETTLEMENT—STATUTES—CONSTRUCTION.

1. Rev. Pol. Code 1903, §§ 2810, 2812, charge the care of an insane person to a county where he has acquired a "legal settlement," without defining what shall constitute such settlement. *Held*, that it must be deemed to have been used with the same meaning as in section 2764, relating to "poor and indigent persons," and providing that they acquire a "legal settlement" charging a county with their support by a residence therein for 90 days, which they lose by acquiring a new one, or by willful absence from the county for 90 days; it not appearing that a "legal settlement" was otherwise defined by any statute.

Appeal from Circuit Court, Moody County; Joseph W. Jones, Judge.

Proceedings between Moody county and Minnehaha county to determine the legal settlement of Cornelius W. Bigelow, an insane person. From an order in favor of Moody county, Minnehaha county appeals. Affirmed.

W. D. Scott, State's Atty., and A. B. Kittredge, for appellant. J. Q. Adams, State's Atty., for respondent.

FULLER, J. By this appeal we are called upon to determine whether it is Moody county or Minnehaha county that is legally chargeable with the expense of providing Cornelius Bigelow with care, subsistence, and medical treatment at the Yankton Hospital for the Insane, and the undisputed facts upon which the trial court found in favor of respondent may be stated as follows: About September 1, 1901, Mr. Bigelow, having no other place of abode, was induced to become a member of the household of his daughter and her husband, who were at that time actual residents of the city of Sioux Falls, in Minnehaha county. Thus making their home his home, he remained in Sioux Falls until the last of the year, when the family, including himself, removed to Moody county, where the son-in-law engaged in the banking business. On the 10th day of February following he became very ill, and for the sole purpose of securing better care and medical treatment was taken from the Moody county home to a hospital in Sioux Falls, where he remained one week before becoming insane. On or about the 8th day of March it was decided by the Minnehaha county board of insanity that Bigelow was not a resident of that county, and, pursuant to the direction of such board, he was returned to Moody county, where his insanity was officially determined, and his legal settlement charged to Minnehaha county. At the time the family left Sioux Falls for Moody county, Bigelow had been a resident of Minnehaha county continuously for about 4 months, while but 74 days intervened between the date of his arrival in Moody county and the action of its board of insanity adjudging him to be of unsound mind and a fit subject for custody and treatment in the hospital for the insane. In determining which county is chargeable for the expense of his maintenance at the hospital it becomes necessary to decide what the Legislature intended by the use of the term "legal settlement," as employed in the statute providing for the application for admission to the hospital, and also in the warrant of the commissioners of insanity authorizing the superintendent of such institution to receive a patient adjudged insane. In the Revised Political Code of 1903 the expression "legal settlement" is found in sections 2810 and 2812 of the act relating to the care of the insane, but the time necessary to constitute such settlement is not therein specified. It is provided, however, in section 2764 of the same Code that poor and indigent persons acquire a "legal settlement" that charges the county with their support by a residence therein for the period of 90 days, and "every settlement when once legally acquired shall continue until it shall be lost or defeated by acquiring a new one in this state or by the willful absence from the county in which such legal settlement had been obtained for ninety days or more; and upon acquiring a new settlement or upon the happening of such willful absence, all former settlement shall be defeated and lost." While no rule of construction goes to the extent of requiring the same meaning to be invariably given to the same word used in another and entirely different enactment, there is seemingly something of a kindred nature in statutes providing for the protection and maintenance of persons destitute and rendered helpless either by indigency or insanity. So, where a statute pertaining to the care of the poor has plainly designated the period of actual residence necessary to constitute "legal settlement," and the undefined expression is employed in a subsequent enactment which relates exclusively to the care of the insane, there appears to be ample justification for the presumption that the Legislature intended to use the term in its previously accepted sense, and not to signify "a place of residence" which is clearly distinguishable, even in the absence of a statutory definition. 22 Am. & Eng. Encyc. of Law, 949, and cases cited in the notes. In construing a similar statute for the purpose of fixing the liability of a county for the support of an insane person, the Michigan court says: "The term 'legal settlement' is defined in but one statute, and that has been cited. It is there used in connection with the poor laws. It is plain that the Legislature had in mind some period or circumstances which should constitute a legal settlement, as that should be sufficient to impose the burden of public support, and what more natural than that it should be the requirement established by

Digitized by Google

law in ordinary cases?" Superintendents of Poor v. Superintendents of Poor, 124 Mich. 17, 83 N. W. 408. Our attention has been directed to no statutory provision where the term "legal settlement" is used other than in connection with the poor and the insane, and a residence of 90 days in the county seems essential to its creation. By 4 months of continuous residence, Cornelius Bigelow obtained a legal settlement in Minnehaha county, which continued good for 90 days after his removal to Moody county, and his commitment to the hospital for the insane within that period and before another legal settlement had been acquired renders Minnehaha county liable for his maintenance, as found by the trial court. While none but the essential facts in regard to the residence of Bigelow have been given here, the proof was entirely clear, conclusive, and uncontradicted that, in contemplation of the statute, his legal settlement in Minnehaha county continues, and could be defeated only by showing an actual residence of 90 days in another county.

The order appealed from is affirmed.

BROOKE v. EASTMAN, Commissioner.

(Supreme Court of South Dakota. Oct. 7, 1903.)

SCHOOL LANDS — PURCHASE — INTEREST ACQUIRED—EXECUTION—TRIAL—STIPULATION OF COUNSEL.

1. Const. art. 8, §§ 5, 6, relating to the disposal of school lands, provide that the purchaser shall pay one-fourth of the price in cash and the remaining three-fourths in installments, but all such subdivided lands may be sold for cash, provided that upon payment of the interest for one full year in advance the balance of the purchase price may be paid at any time, and that no "sale" shall operate to convey any title to any lands for 60 days after the date thereof, and that no grant shall issue until final payment. Laws 1890, p. 296, c. 136, provides for sales in pursuance of the constitutional provisions, and for the issuance of "contracts of sale," and declares that whenever the purchaser of any tract shall default in the principal or interest, or shall violate any of the provisions of the contract of sale, such sale may be set aside. *Held*, that a purchaser who had made the first payment, and received a contract of sale from the commissioners, had an interest in the lands, which was subject to execution under Rev. Code Civ. Proc. 1903, § 336, subjecting to execution "all goods, chattels, moneys, and other property, both real or personal, or any interest therein, of the judgment debtor."

2. In a suit by execution purchasers of school lands to compel the state to issue patents to them instead of to the original purchaser, the state, by a stipulation of counsel, agreed that, if the original purchaser had such an interest in the land as could be sold under execution, the execution and all other proceedings herein were regular, and his interest passed to plaintiff under said sheriff's deeds. *Held*, that the state could not be heard to complain that, in case it was compelled to issue patents to plaintiff, it would be unprotected from any claims by the original purchaser.

Appeal from Circuit Court, Brookings County; Julian Bennett, Judge.

Proceedings by William M. Brooke against David Eastman, as commissioner of school lands, to compel the issuance of patents to certain school lands to plaintiff. From a judgment for plaintiff, defendant appeals. Affirmed.

John L. Pyle, Atty. Gen., and Alva E. Taylor, Asst. Atty. Gen., for appellant. Philo Hall and W. H. Roddle, for respondent.

HANEY, P. J. It appears from the agreed statement of facts upon which this cause was submitted to the circuit court that one Iver L. Opsal was the highest bidder for certain tracts of school land; that he deposited with the county treasurer the first payment on each tract; that he received "contracts of sale" in the form prescribed by the board of school and public lands, agreeably to the provisions of chapter 136, p. 296, Laws 1890 (which have not been amended in any manner affecting the questions presented by this appeal); that neither tract was occupied as a homestead, nor exempt as such from sale on execution; that the land was sold at sheriff's sales under and by virtue of executions duly issued upon personal judgments regularly obtained against Opsal; that, no redemption having been made, sheriff's deeds were regularly issued to the purchasers, who subsequently conveyed to the plaintiff; that Opsal wholly abandoned the land after the execution sales, and has not offered or attempted to perform any of the conditions of his contract with the state since making the first payment; that the plaintiff and his grantors promptly paid to the treasurer of the county wherein the land is situated each subsequent payment required by the "contract of sale" and all taxes assessed against the land; and that the plaintiff demanded a patent from the state prior to the commencement of this action, which was refused. Any defect of parties defendant is expressly waived, and defendant admits "that, if Opsal had such an interest in the land as could be levied upon and sold under execution levied upon his right, title, and interest in the land, the execution and all other proceedings herein were regular, and his interest and title passed to plaintiff under said sheriff's deeds, and he would now be entitled to patents therefor; but defendant contends that Opsal did not have such an interest in the real estate as could be levied upon and sold, and that, in order to entitle relator to patents, the contracts themselves held by Opsal should have been assigned, and that the proceedings herein shown do not amount to such assignment." The question thus clearly defined has not been heretofore considered by this court. In view of the consequences likely to flow from its determination, a careful examination of the law relating to execution sales and the disposal of school and public lands is demanded. "All goods, chattels, moneys and other property, both real and personal, or any interest therein of the judgment debtor, not exempt by law,

Digitized by Google

are liable to execution." Rev. Code Civ. Proc. 1903, § 336. Upon a sale of real property on execution "the purchaser is substituted to, and acquires all the right, title, interest and claim of the judgment debtor thereto." Id. § 373. The sheriff's deed vests in the purchaser, or his assigns, "as good and as perfect title in the premises therein mentioned and described as was vested in the debtor at or after the time when such real property became liable to the satisfaction of the judgment." Id. § 384. If, therefore, Opsal had any interest in the land in controversy, such interest was acquired by the plaintiff. Our state Constitution contains the following, among other, provisions relating to the disposal of school and public lands: "No land shall be sold for less than the appraised value, and in no case for less than ten dollars an acre. The purchaser shall pay one-fourth of the price in cash, and the remaining three-fourths as follows: One-fourth in five years, one-fourth in ten years and one-fourth in fifteen years; with interest thereon at the rate of not less than six per cent. per annum, payable annually in advance, but all such subdivided lands may be sold for cash, provided that upon payment of the interest for one full year in advance, the balance of the purchase price may be paid at any time. All sales shall be at public auction to the highest bidder, after sixty days' advertisement of the same in a newspaper of general circulation in the vicinity of the lands to be sold, and one at the seat of government. * * * All sales shall be conducted through the office of the commissioner of school and public lands as may be prescribed by law, and returns of all appraisals and sales shall be made to said office. No sale shall operate to convey any right or title to any lands for sixty days after the date thereof, nor until the same shall have received the approval of the Governor in such form as may be provided by law. No grant or patent for any such lands shall issue until final payment be made." Const. art. 8, §§ 5, 6. Substantially, if not identically, the same language was employed by the Legislature in establishing and providing regulations for the department of school and public lands. Laws 1890, p. 296, c. 136. All sales are required to be at public auction to the highest bidder, and conducted through the office of the commissioner of school and public lands. Whenever a bid is accepted, the purchaser must at once deposit with the county treasurer the amount of the first payment of the price named, together with the amount of the interest for the fiscal year on the deferred payment, or, if the sale be for cash, he must deposit the full amount of the price named, and in either case take the treasurer's receipt for the money deposited, a copy of which receipt shall be retained by the treasurer. The purchaser shall exhibit such receipt to the county auditor, who shall thereupon make a complete report of the case to the commissioner, who shall, if the land is to be paid for in installments, cause to be prepared a "contract of sale" in duplicate according to the form prescribed by the board of school and public lands, and submit the same to the Governor for his approval. If approved, one copy of such contract shall be filed in the commissioner's office and another forwarded to the county auditor to be delivered to the purchaser after the expiration of 60 days from the date of sale. Rev. Pol. Code 1901, §§ 375–377. The only statutory provisions of which we are aware, having direct reference to the effect of a purchaser's failure to perform his obligations under one of these contracts and to the remedy of the state in such a case, are as follows: "The deferred payments for lands sold, and the interest thereon, shall be promptly paid when due, to the county treasurer. Whenever the purchaser of any tract shall fail to pay the principal or interest due by him to the state for such tract, or shall violate any of the provisions of the contract of sale, such sale may be set aside by the circuit court of the county in which the tract is situated. Actions shall be prosecuted to enforce the provisions of this section by the state's attorney of such county whenever he is directed so to do by the commissioner of school and public lands." Id. § 383. The "contracts of sale" delivered to Opsal were all in the same form, signed by the commissioner, and approved by the Governor. The following is a copy of one of them: "At a sale made in the city of Brookings, in the county of Brookings, state of South Dakota, on the 7th day of April, A. D. 1891, of school lands in the county of Brookings, in pursuance of law, Iver L. Opsal of Brookings, purchased the northwest quarter of the southwest quarter of section No. 16, in township No. 110, north, of range No. 50, containing 40 acres and no hundredths, as appears from the plats and records of said lands now in the office of the commissioner of school and public lands, for the sum of four hundred dollars and no cents, of which amount the said purchaser paid at the time of purchase the sum of one hundred dollars and no cents on account of the purchase money, and thirteen dollars and twenty cents, being the interest on the amount unpaid to the 1st day of January, A. D. 1892. Now if the said purchaser, his heirs, assigns, or other legal representatives, shall pay to the treasurer of the county of Brookings, in said state, at his office, the further sum of three hundred dollars and no cents, being the amount of the unpaid purchase money, as follows: viz: One-third thereof in five years, one-third in ten years, and the remainder in fifteen years from the 1st day of January, A. D. 1892, the date of said purchase, with interest at the rate of six per centum per annum, annually in advance, on the first day of January of each year, until the entire amount of said purchase money is paid, and shall also pay to the proper officer all taxes which may be levied

Digitized by Google

upon said land as the same shall become due, then, and in that event only, will the said purchaser, his heirs, assigns, or other legal representatives, be entitled to a patent for the land herein described. But in case of the nonpayment of the purchase money, or interest, aforesaid, as it may become due, or the violation of any of the provisions of this certificate by the purchaser of said land, or any person claiming under him, then the commissioner of school and public lands may cause proceedings to be instituted in the proper circuit court, as provided in section twenty-six of chapter one hundred thirty-six, of the Laws of 1890, to set aside the sale." It will be observed that the transaction between the state and Opsal is termed a "sale" in the Constitution and in the statutes, that the formal evidence of the transaction is termed "a contract of sale" throughout the statutes, and that the instrument delivered to the purchaser in this case is substantially in the language of the law. It simply provides that upon payment of the entire purchase price, with interest and all taxes levied on the land, the purchaser shall receive a patent, and that upon failure to perform either of these conditions an action may be instituted to "set aside the sale." We are not intending to criticise the form of these instruments. The difficulty in determining the rights of the parties to this controversy arises from the failure of the Legislature to clearly and accurately express its intention, not from any fault of the state land department. It is doubtful if the officers of the latter would have authority, in preparing these "contracts of sale," to make any substantial departure from the language of the law. They certainly would have no power to include any provision not consistent with the Constitution and legislative enactments. But, however that may be, in the case at bar no attempt was made to go beyond the language of the law in defining the rights of the parties, and the nature of the transaction may be determined without further reference to the phraseology of the instruments delivered to the purchaser.

Since long before the adoption of the Constitution the meaning of the word "sale" and the distinction between "sales" and "agreements for sales" have been legally defined in this jurisdiction. Rev. Codes 1877, p. 348. It cannot be assumed that such meaning and distinction were unknown to or disregarded by either the constitutional convention or the Legislature. "Sale is a contract by which, for a pecuniary consideration, called a price, one transfers to another an interest in property." Rev. Civ. Code 1903, § 1299. The word itself implies the transfer of an interest in the subject of the contract. Presuming the word to have been advisedly employed, the conclusion cannot be avoided that the transaction between the state and Opsal was intended to be regarded as a transfer of an interest in the land itself. This conclusion does not conflict with, if it is not impliedly supported by, the language of the Constitution. "No sale shall operate to convey any right or title to any lands for sixty days after the date thereof, nor until the same shall have received the approval of the Governor in such form as may be provided by law." Const. art. 8, § 6. These words of limitation were unnecessary unless it was understood that a sale in itself operates to convey some right and title to the land; and they may be fairly construed to mean that such is the result after 60 days have expired and the approval of the Governor has been obtained. As to sales of private land by contract, it is a well-recognized rule that the property is from the time of the delivery of the executed contract at the risk of the vendee, who holds the full equitable title, the vendor's legal title merely remaining in him for security to compel the payment of the purchase price; the relation between the parties being analogous to that between mortgagor and mortgagee, the vendee holding an equity which is liable to foreclosure on the suit of the vendor. 28 Am. & Eng. Enc. of Law, 107; Bissell v. Heyward, 96 U. S. 580, 24 L. Ed. 678; Jennison v. Leonard, 21 Wall. 302, 22 L. Ed. 539. It is equally well settled with respect to private lands that a vendee with bond for title has an interest which may be reached by execution, and the same is true where the vendee has entered under a contract of sale, and paid part of the purchase money and made improvements. 11 Am. & Eng. Ency. Law (2d Ed.) 637. Merely because this controversy involves public land affords no reason for ignoring wise and universally recognized principles of the law of real property. It is the duty of this court to determine what regulations have been, not what could or should have been, established for the disposal of the school and public lands. In doing so attention should be given to the language of our own Constitution and the statutes, rather than to the decisions in other states where the Constitution and statutes are not the same as here.

It will be readily conceded that one who has received a contract of sale as provided in the statute has the right to exclusive possession of the property, the unrestricted right to cultivate it, the right to make permanent improvements thereon, and it is his duty to pay all taxes levied upon it. These rights and this duty continue until the sale has been set aside by the circuit court. Suppose one has made valuable improvements, and paid all of the installments, what has the state in the land beyond the naked legal title? Nothing. Suppose all payments except the last one have been made, and all taxes for 15 years have been paid, has not the purchaser, at least in equity, a substantial and valuable interest in the premises? He most certainly has. Where only one payment has been made, the interest may be less valuable, but it is the same in nature and quality. The conclusion cannot be avoided

Digitized by Google

that Opsal had an interest in the land in controversy which was subject to sale on execution, and which was, by operation of the execution sales and subsequent conveyances, acquired by the plaintiff. Nothing in the section of the statute heretofore quoted, relating to the setting aside of these sales, militates against this conclusion; on the contrary, the purchaser on the installment plan is recognized as having rights which can be terminated only by a judgment or decree of the circuit court. The entire expression of the legislative will on this important subject is brief, and somewhat peculiar. Sales are usually "set aside" for some cause affecting their validity ab initio. It is scarcely accurate to speak of "setting aside" a valid sale when the evident purpose of the proceeding is to ascertain the rights and liabilities resulting therefrom. Possibly "rescind" would more nearly express the legislative intent. The statute is silent as to what consequences shall flow from the setting aside or rescission of one of these sales. A case might arise where an absolute forfeiture of all payments and improvements would be grossly unjust. Whether the Legislature would have power to provide for such a forfeiture is not pertinent to this appeal. It is enough to say that it has not attempted to do so, and that under the existing statute a court of equity sitting for the purpose of vacating or rescinding a sale would have inherent power to properly adjust the equities of the respective parties. Therefore the nature of the state's remedy in cases of failure to perform on the part of the purchaser is entirely consistent with the contention that he has an interest in the land subject to sale on execution.

As all the conditions of the contract of sale have been performed, and it is immaterial to the state who secures the patent, it has no cause to complain if required to convey the legal title, provided it is protected from any future claims on the part of the original purchaser, his heirs or assigns. Under the stipulation of counsel in this case, the state cannot be heard to say that it will be so unprotected. We suggest, however, that in cases of this character all persons connected with the contract of sale should be made parties to the action or proceeding for the benefit of the plaintiff's title as well as the protection of the state.

We think the plaintiff is entitled to a patent to the land in controversy, and that the judgment of the circuit court should be affirmed. It is so ordered.

WILLIAMSON v. LAKE COUNTY et al.

(Supreme Court of South Dakota. Oct. 9, 1903.)

SHERIFFS—FEES—DE FACTO OFFICER.

1. The fact that copies of papers served by a sheriff were printed by the plaintiff, for whom they were served, is no reason why fees for such copies should not be taxed as costs against defendant.

2. The title of a deputy sheriff to his office cannot be attacked collaterally on a motion, to which he is not a party, to compel the clerk to tax as costs in a cause certain fees of the deputy for service of process.

3. A deputy sheriff, acting under an appointment made by the sheriff, is a de facto officer, though he has not filed his appointment and oath of office, as required by Pol. Code, § 1818, and service of process made by him is valid as to defendant.

4. A plaintiff who has paid to a sheriff fees for the service of process is entitled to have such fees taxed as costs, though the deputy serving the process was merely a de facto officer.

Haney, P. J., dissenting.

Appeal from Circuit Court, Lake County.

Action by J. H. Williamson against Lake county and others. Appeal by defendant Lake county from an order directing the clerk to retax costs in the action. Affirmed.

Herbert H. Holdridge, for appellant. Bailey & Voorhees and J. H. Williamson, for respondent.

CORSON, J. This is an appeal from an order made by the circuit court of Lake county directing the clerk of that court to retax the costs in this action by adding to the costs theretofore taxed the sum of $13.30 sheriff's fees, the same being the item of sheriff's fees theretofore disallowed by him; and that the same be entered in the judgment as a part of the costs in the action. This is one of forty actions brought by the stockholders of the Northwestern Loan & Banking Company to enjoin the county from collecting taxes levied by it upon the shares of the capital stock held by the respective plaintiffs in said action. One of the actions—Macomb v. Lake County—was appealed to this court, and the opinion in the same is reported in 9 S. D. 466, 70 N. W. 652. A second appeal was taken, and the opinion is reported in 13 S. D. 103, 82 N. W. 417, in which opinions the facts are fully stated. Judgments were thereupon entered in favor of the plaintiffs in the several actions in the circuit court. The bill of costs presented in each case to the clerk for taxation included $13.30 fees paid the sheriff for the service of papers in the actions. The item of $13.30 in this case was disallowed by the clerk, and an appeal taken by the defendant to the circuit court, the action of the clerk reversed, and he was directed, as we have seen, to allow the item in the bill of costs, and enter the same in the judgment. By stipulation the other 38 cases are to abide the result of the decision of this case; the case of Macomb against the defendant herein, supra, having been disposed of.

This item of costs was objected to in the court below upon substantially the following grounds: (1) Because H. B. Williamson, who served the summons, complaint, and order, was not a deputy sheriff duly appointed and qualified as required by law, and was a party

Digitized by Google

to one of said actions, and in the employ of the corporation of which all of said plaintiffs were stockholders. (2) No return was ever made on said papers by any sheriff or legal deputy. (3) That no fees should be allowed for copies of said summons, complaint, and order, for the reason that they were all printed by the plaintiff, and said officers made no such copies, and there is no law authorizing the taxation as costs fees for copies so made by plaintiff.

It appears from the record presented that the summons and complaint and other papers in the action were served by one H. B. Williamson, who was appointed deputy sheriff by the sheriff of the said county, but who failed to file his appointment and oath of office with the county auditor, as required by section 1818, Pol. Code, formerly section 1399 of the Compiled Laws. It also appears that the summons and complaint were printed by the plaintiff, and that no copies were in fact made by the sheriff or his deputy, and that only the printed copies furnished by the plaintiff were served.

The second contention was made evidently upon the theory that, the return being made by H. B. Williamson, who the appellant claims was not a legal deputy, there was, therefore, no legal return. The objection that the sheriff should not be allowed fees for the service of copies of the papers for the reason that they were printed by the plaintiff is clearly untenable. It is not a matter of any concern to the defendant as to the method in which the sheriff or his deputy secured copies to be served. If an officer serve copies as provided by law, he is entitled to his fees for such copies as against the opposite party, and may require such fees in advance. Section 1858, Pol. Code.

The only question, therefore, to be considered is whether the respondent is entitled to tax as a disbursement the item of $13.30, sheriff's fees, the papers having been served by a deputy whose appointment and oath of office had not been filed as required by law. It is contended by the appellant that the officer serving the papers was not a legal deputy, and, not being such, he was not entitled to the fees for the service of the papers, and hence, if the plaintiff has paid the fees to the sheriff, he paid them voluntarily, and is not entitled to have them taxed as costs in the action. The argument of the appellant is based entirely upon the theory that an officer who is not a de jure officer cannot recover his fees for services performed, though he may be a de facto officer, and his acts as to third parties may be good. The respondent insists: (1) That the officer was a de jure officer, notwithstanding his failure to file his appointment and oath of office, so long as he was permitted to act as such officer; in other words, he had at least a legal title to the office, subject only to removal for failure to file his appointment and oath of office. (2) That, if he was not a de jure officer, then he was a de facto officer, and, having performed the service, and the respondent having paid the sheriff the fees for the performance of such service, he is entitled to tax the same as costs in the action. We are inclined to take the view that the latter position taken by the respondent is correct, assuming that the deputy was only a de facto officer, and hence it will not be necessary in this case to decide whether or not the officer was a de jure officer, as his title to the office cannot be attacked in a collateral proceeding to which he is not a party. While one who holds an office as a de facto officer only may not be entitled to recover for his services, a litigant who has paid such fees to the sheriff, who is conceded to have been a de jure sheriff, is entitled, in our opinion, to have the same allowed as costs in the action. It was the sheriff who was employed to serve the papers, and it was not material to the plaintiff whether the sheriff performed the duties in person or performed them by a deputy; and, as the deputy was acting under an appointment made by the sheriff, he was at least a de facto officer, and his services were valid and binding upon third parties. Whether, therefore, the deputy was or was not a de jure deputy, the plaintiff was liable to the sheriff for the fees for the services so performed. When papers are placed in the hands of a sheriff for service, they are, in contemplation of law, served by such sheriff, and he is entitled to the legal fees for such service. To the deputy, as such, the plaintiff in the action incurs no liability, his liability being to the sheriff. The plaintiff in such case is not required to examine the records and ascertain whether or not a person acting as deputy appointed by the sheriff is or is not a legal deputy; and, as we have seen, third parties are not required to examine the records to ascertain that fact, as his acts as a de facto officer are good as to such third party. We are of the opinion, therefore, that the learned circuit court was clearly right in reversing the taxation of costs made by the clerk, and directing him to tax the item of $13.30 for sheriff's fees.

The order appealed from is affirmed.

HANEY, P. J., dissenting.

ELFRING et al. v. NEW BIRDSALL CO.

(Supreme Court of South Dakota. Oct. 7, 1903.)

COSTS—STENOGRAPHER'S FEES—COST OF APPEAL BOND—COURTS—STARE DECISIS.

1. Costs are limited to items specified by statute.

2. An appellant granted costs could not tax items "for stenographer's fees to perfect appeal record" and "for appeal bond"; there being no statute specifically allowing such items.

¶ 1. See Costs, vol. 13, Cent. Dig. §§ 1, 570.

Digitized by Google

8. Decisions by the Supreme Court based on a statute which had in fact been repealed when the decisions were rendered cannot control subsequent decisions.

Appeal from Circuit Court, Codington County; Julian Bennett, Judge.

Action by John Elfring and others against the New Birdsall Company. From the clerk's taxation of costs on appeal, defendant appeals. Affirmed.

George W. Case, for appellant. John B. Hanten, for respondents.

HANEY, P. J. In the decision heretofore rendered in this action, modifying the judgment of the court below, the appellant was allowed costs and disbursements in this court as if the case had been reversed. Elfring v. New Birdsall Co. (S. D.) 92 N. W. 29. In its notice of taxation, appellant claimed the following items: "For stenographer's fees to perfect appeal record, $35," and "for appeal bond, $17.50," objections to which, interposed by the respondent, were sustained by the clerk, and the appellant appealed.

The first item was allowable, under Comp. Laws 1887, § 484; Ellis v. Wait, 4 S. D. 504, 57 N. W. 232; Novotny v. Danforth, 9 S. D. 412, 69 N. W. 585. That section read as follows: "Such reporter shall, on the request of either party in a civil or criminal case, make out such transcript and deliver the same to the party desiring it, on payment of his fees therefor by such party at the rate per folio as provided in section 483, and the amount allowed such reporter for transcripts required in the case shall be taxable costs." In 1893 the section was amended to read as follows: "Such reporter shall, on the request of either party in a civil or criminal case, make out and certify such transcript and deliver the same to the party desiring it, on payment of his fees at the rate of ten cents per folio, and such transcript when certified by the reporter to be a correct transcript of his notes of the evidence, proceedings and rulings shall be prima facie evidence of the testimony given and of the rulings and decisions of the court and of the proceedings had upon the trial; for each carbon copy of such transcript in civil cases the reporter shall when such copy is requested receive five cents per page." Laws 1893, p. 149, c. 87, § 2. It is well settled that costs and disbursements are creatures of statute, and cannot be allowed in the absence of statutory authority. 5 Ency. Pl. & Pr. 110. It will be observed that the words "and the amount allowed such reporter for transcripts required in the case shall be taxable costs" are omitted from the statute as re-enacted in 1893 and revised by the Code commissioners of 1903. Rev. Pol. Code, § 671. Presuming, as we must, that this omission was intentional, the conclusion is irresistible that since 1893 there has been no statutory authority for the first item in dispute on this appeal. While it is true that the decisions cited, wherein the section was construed as it read prior to the amendment of 1893, were rendered after such amendment took effect, it is evident that the change in the statute was not called to the attention of this court, and such decisions cannot prevail as against the unmistakable legislative intent.

As to the second item, we are aware of no statutory provision authorizing the allowance of amounts paid to sureties on appeal bonds. In the absence of such provision, the clerk was clearly right in disallowing the item, even though the amount stated was paid by the appellant to a duly incorporated indemnity company.

The clerk's taxation is affirmed.

DEWEY v. KIMBALL et al.

SAME v. NATIONAL BOND & SECURITY CO.

(Supreme Court of Minnesota. Oct. 16, 1903.)

TORRENS LAW—PUBLICATION OF SUMMONS—PARTIES.

1. In publishing the summons provided for in Laws 1901, p. 348, c. 237, known as the "Torrens Law," it is not necessary to follow the provisions of Gen. St. 1894, § 5204. A compliance with the provisions of section 20, p. 353, c. 237, is all that is required.

2. Where the examiner suggests that a certain party named by him be made a defendant, but the suggestion is not observed, and, on the contrary, is entirely ignored, the judgment thereupon entered is invalid and void as against such party, and as against all persons, natural or artificial, in privity with such party, not made defendants in the proceeding.

(Syllabus by the Court.)

Appeals from District Court, St. Louis County; Homer B. Dibell and Wm. A. Cant, Judges.

On rehearing. Affirmed.

For former opinions, see 95 N. W. 317, 895.

COLLINS, J. Upon the filing of a petition for reargument in this case it was ordered that counsel be heard upon two points only: First. Is it necessary to follow the provisions of Gen. St. 1894, § 5204, when publishing the summons provided for in Laws 1901, p. 348, c. 237, § 20, or is that section sufficiently complied with by causing the summons to be published the required length of time, of which proof shall be made, without any other or further act? Second. Is a judgment entered, as was the one now before us, invalid and void as to all parties defendant, or simply invalid and void as against a person or party named by the examiner, and who should have been designated in the summons as a defendant, but was not?

Upon due examination of the briefs presented by counsel upon these two points, we conclude that it is not necessary to observe the provisions of section 5204, supra. The language found in section 20 in respect to

Digitized by Google

publication is not very definite, but the provision is that the summons shall be served upon nonresident defendants and upon unknown persons or parties defendant by publishing it in a newspaper printed and published in the county wherein the application is filed for the prescribed number of weeks, of which proof must be made. Section 20a makes it the duty of the clerk of the district court to send by mail a copy of this publication to all nonresident defendants whose place of address is known, or stated in the application. There is a provision that other and further notice of the application may be given to defendants in any manner directed by the court. We are of the opinion that these provisions are exclusive, and provide the mode and manner of service upon nonresidents and unknown defendants, and that nothing more can be required of the applicant than a compliance with them. Nor can we now suggest any good reason why this method of service is not as complete, and will not prove as effectual as that provided for in section 5204. This construction of section 20 is in harmony with the understanding and the practice of all attorneys up to the time that doubt was cast upon its correctness by the original opinion in this case. While this fact is not conclusive upon the court, it may well be given some consideration and weight.

Answering the second question, we are of the opinion that a judgment so entered is invalid and void as against the persons or parties named by the examiner, and who should have been designated in the summons as defendants, but were not, and against all parties who claim under them, or who are in privity with them. The proceeding is one in rem, and the bond company claimed an interest in the land in question under a tax certificate first issued to the investment company, and then assigned to it. In Ware v. Easton, 46 Minn. 180, 48 N. W. 775, an action brought against unknown parties under section 5818, the court restricted the invalidity of the judgment only as against a party not named as defendant, but who, of record, appeared to be the owner of the patent title, and parties claiming under him. The present conclusion is in harmony with that case. In fact, the question now before us has really been answered by this court in Reed v. Carlson, 95 N. W. 303. It must not be understood that it was the intention of the court to hold to the contrary in the original opinion. The point was not alluded to by counsel nor considered by the court. But that it may not remain in doubt, we now hold that the judgment in question was invalid and void as against the investment company and the bond company, both domestic corporations, and within the jurisdiction of the court. The failure to follow the suggestion and recommendation of the examiner that the investment company be made a party affected the judgment only as to it, and persons, natural or artificial, in privity with it, not made defendants in the proceedings.

Except as it has thus been made more definite, the former opinion is adhered to.

KIRKEBY v. ERICKSON.

(Supreme Court of Minnesota. Oct. 16, 1903.)

STATUTE OF FRAUDS—SALE OF WILD LAND.

1. A sale of wild grass growing upon the vendor's land cannot be made by parol. Such an agreement comes within the statute of frauds, and a written contract cannot be dispensed with.

(Syllabus by the Court.)

Appeal from District Court, Yellow Medicine County; Gorham Powers, Judge.

Action by Martin O. Kirkeby against Oluf Erickson. Judgment for defendant, and plaintiff appeals. Affirmed.

Oluf Gjerset, for appellant. C. A. Fosnes, for respondent.

COLLINS, J. From the findings of fact, which stand unchallenged in this court, it appears that the plaintiff, owner of a certain quarter section of land, entered into an oral contract with the defendant for the sale of wild grass then growing thereon, the agreed price being $75, no part of which has been paid. Afterwards the defendant entered upon the land, and cut one swath of this grass, about 5 feet wide and 40 rods long. The defendant did not remove the cut grass, nor did he again enter upon the premises. No part of the remainder was cut by either plaintiff or defendant. The court below held that plaintiff could not recover the amount agreed upon, and its judgment will have to be affirmed. The grass which was the subject of the oral contract was a part of the plaintiff's real estate, and the agreement was void, because it attempted to create an estate in land, and was not in writing, as required by Gen. St. 1894, § 4215. There has been a great deal of discussion upon this subject, and the courts of last resort are greatly at variance, not only as to the rule to be applied, but also as to the reason for holding one way or the other. But in this particular case we simply have to ascertain whether the alleged contract of purchase involved, either by express stipulation or by fair implication from the circumstances, an agreement that the vendee should have the right to enter upon or occupy the vendor's land during a definite or indefinite time after the bargain. Where such an agreement is a part of the transaction it seems clear that an interest in land is contracted for and agreed to be given. Such an agreement comes within the statute of frauds, and a written contract cannot be dispensed with. Brown, Stat. of Frauds, § 257a, 2 Taylor, Ev. § 952. See, also, 1 Benj. Sales, § 121; 1 Meecham, Sales, § 341. At common

¶ 1. See Frauds, Statute of, vol. 22, Cent. Dig. §§ 86, 116.

Digitized by Google

law, grasses growing from perennial roots are regarded as fructus naturales, and, while unsevered from the soil, are considered as pertaining to the realty. Sparrow v. Pond, 49 Minn. 412, 52 N. W. 36, 16 L. R. A. 103, 32 Am. St. Rep. 571. We have no statute changing this rule, except Gen. St. § 5464, which has no relevancy here. In Erickson v. Paterson, 47 Minn. 525, 50 N. W. 699, it was held that growing crops, fructus industriales, pass with the land upon the conveyance thereof without express mention, unless properly reserved. See, also, Kammrath v. Kidd (Minn.) 95 N. W. 213. This is because for the purposes of sale they are regarded as part of the real estate. In this particular case the right of the defendant to enter upon plaintiff's premises for the purpose of cutting and removing the grass was implied from the fact of the sale. This gave the former exclusive possession of the land upon which the grass grew for the purpose of cutting and removing it; a limited possession to be sure, but sufficient for him, in case the contract had been valid, to maintain an action against any person entering upon the land and interfering with his right to cut and remove the grass. Crosby v. Wadsworth, 6 East, 602. Such a case must be distinguished from one where the vendor of the property sold is to sever it from the soil himself. Verbal sales of that character have frequently been upheld as not within the statute. It is clear that this agreement, as found by the court, was for the sale of an interest in land, and came within the prohibition of the statute. But, even if it could be held that the contract was for the sale of personal property, the price agreed upon exceeded $50. There being no written note or memorandum of the contract, no acceptance of the goods, and no payment of any part of the purchase money, it came within the provisions of Gen. St. § 4210, and was void.

The plaintiff's counsel suggests that when the defendant entered upon the land and cut a small part of the grass there was a sufficient compliance with the statute. But by this act alone he did not accept or receive any part of the property attempted to be sold.

Judgment affirmed.

LELAND NORWEGIAN LUTHERAN CONGREGATION, WINNEBAGO COUNTY, v. LARSON.

(Supreme Court of Iowa. Oct. 8, 1903.)

SUBSCRIPTIONS—CONDITIONS.

1. Where defendant subscribed a certain amount for the construction of a church, which was conditioned on the establishment of a congregation entirely free and independent of the churches from which its membership was drawn, and thereafter, before a pastor was selected, the congregation split into factions on the lines of the former church government from which the members had come, and it was agreed that the property of the congregation should be divided, which was done, the condition was not performed, and defendant was not liable on the subscription.

Appeal from District Court, Winnebago County; J. F. Clyde, Judge.

Action at law to recover of the defendant $75 subscribed towards the building of a church. Trial to the court, and judgment for the defendant. The plaintiff appeals. Affirmed.

G. H. Belsheim, for appellant. H. A. Brown, for appellee.

SHERWIN, J. The Synod Lutheran Church and the United Lutheran Church are wholly distinct and separate church organizations, having different governing bodies, and different confessions. Both, however, base their faith and teachings on the Bible and on the same canonical and symbolical books. There is some difference in the doctrinal belief of the two churches, but there is no material difference in their form of service or in their church government. In the early summer of 1898, members of both churches, residing in and around Leland, agreed to unite and form a congregation which should be entirely free and independent, absolutely nonpartisan, and without affiliation with either the Synod Lutheran Church or the United Lutheran Church. Pursuant to this agreement, a corporation was formed, which included members of both churches, and subsequently subscriptions were secured for erecting a place of worship; the defendant being among the subscribers thereto, and a member of the Synod Lutheran Church. When the church building was partially completed, and on the 2d of November, 1898, the members of the congregation met for the purpose of selecting a pastor to minister to the moral and spiritual welfare of the new congregation. They could not agree, however, and divided along the line of previous church connections. It was then mutually agreed that it would be better to separate, and to divide the property held in common, and an agreement was reached whereby the United Lutheran people were to keep the building, and to pay the Synod Lutheran people, who withdrew, the sum of $300, and, in addition thereto, to return the subscriptions paid by them. This agreement was carried out in good faith and temper, and afterwards the Synod Lutheran Church congregation of that locality built a church of its own, and the plaintiff is in fact under the government of the United Lutheran Church. The evidence conclusively shows that the defendant's subscription was conditioned upon the establishment of a congregation entirely free and independent of the churches from which its membership was drawn, and that such condition was not performed, because the building so built is not now owned or used by the congregation for whose benefit the subscriptions were made. This, alone, would be sufficient to defeat a recovery by the plaintiff. M. E. Church v. Sweny, 85

Digitized by Google

Iowa, 627, 52 N. W. 546; Keys v. Weaver, 95 Iowa, 13, 63 N. W. 357. That such was the understanding of all parties at the time of the separation and division on the 2d of November admits of no doubt, and that the plaintiff does not now represent such a congregation as was contemplated by the subscriptions is equally as clear.

The judgment of the district court is therefore affirmed.

STATE v. STOLLEY.

(Supreme Court of Iowa. Oct. 6, 1903.)

SEDUCTION — DEFENSES — INSTRUCTIONS — LEADING QUESTIONS—SEDUCTIVE ARTS.

1. In a prosecution for seduction, instituted by the woman's father, the fact that the woman did not desire the prosecution is of no avail to defendant.

2. On a prosecution for seduction, instituted by the woman's father, it was not prejudicial error to refer to the woman as "the prosecuting witness."

3. In a criminal case the allowance of one leading question is not reversible error where the witness elsewhere, in response to proper questions, makes substantially the same answer as to the leading question.

4. On a prosecution for seduction there was no evidence of any promises by defendant except a general promise to marry, and a promise just before the intercourse that he would protect prosecutrix if pregnancy resulted; but there was evidence that the parties had been acquainted for 15 years, and that defendant had been courting prosecutrix for 5 or 6 years. *Held*, that an instruction that the jury could take into account attentions paid to prosecutrix, the endearing names used, false promises, and anything likely to break down her virtue, was not misleading.

5. On a prosecution for seduction, where the evidence shows the relation of lovers existing between the parties, and that prosecutrix was justified in believing that defendant's promise to marry and promise to protect her if pregnancy resulted from the intercourse was founded on affection, the evidence of such promises amounted to a showing of seductive arts.

6. Where, on a prosecution for seduction, it appears that prosecutrix permitted defendant to take liberties with her person because of love and affection and promise of marriage, and illicit intercourse results, induced by passion thus aroused, it is a question for the jury whether there was prior unchastity, such as to prevent the intercourse constituting seduction.

Appeal from District Court, Cass County; W. R. Green, Judge.

Defendant appeals from conviction and sentence for the crime of seduction. Affirmed.

Swan & Bruce, for appellant. Chas. W. Mullan, Atty. Gen., and Chas. A. Van Vleck, Asst. Atty. Gen., for the State.

McCLAIN, J. The prosecution was for the seduction of an unmarried woman of 27 years of age, defendant being at the time about 29, and was instituted by the woman's father. Defendant complains of the action of the court in refusing to allow his counsel on cross-examination to inquire of the woman as a witness whether she wished to have the prosecution started. It was wholly immaterial whether she desired the prosecution to be commenced. Had she answered that it was against her wishes, that would not have furnished the basis for a legitimate argument that she really knew the defendant was innocent. Nor was there any prejudicial error committed by the court in referring to her in the instructions as the "prosecuting witness." She was the only witness testifying directly on the trial that the defendant committed the crime charged, and the crime charged was alleged to have been committed against her. The jury could not have misunderstood the court's meaning, nor will we be misunderstood in this opinion if we refer to her as the "prosecutrix," as we shall do for convenience.

The other alleged errors, so far as they are of sufficient importance to require specific attention, can be better discussed after the facts have been stated. The jury would unquestionably have been justified under the evidence in finding that the prosecutrix and defendant had been acquainted for 15 years at the time of the alleged crime, and that defendant had been courting her for the last five or six years of that time, and had promised early in the courtship to marry her; that, although defendant had hugged and kissed her on some occasions, he had not been guilty of conduct not usually regarded as proper between persons who are engaged, until about two months before the alleged seduction; that at that time he took indecent liberties with her, and asked her to permit him to have sexual intercourse with her, which she refused to do, at the same time objecting to the liberties taken; that defendant continued, however, to take such liberties without further protest, and finally had sexual intercourse with prosecutrix on several occasions; that she allowed the continued liberties and the subsequent intercourse because he pretended to be, and she believed him to be, her lover; and, finally, that she had never been guilty of any unseemly or improper conduct with other men, and that her child was the child of defendant. It should be said that defendant, as a witness, denied all declarations of love, all promises to marry, and any improper liberties or sexual intercourse. The case was simple, and, unless there was some serious error in the admission of evidence or in the instructions, the jury could readily understand what was for their determination.

Complaint is made of a leading question propounded to the prosecuting witness with reference to her relying on defendant's statements when she yielded to his importunities; but surely it cannot be seriously contended that allowing the witness to answer one leading question would necessitate a reversal, in view of the fact that the witness elsewhere, in response to proper questions, made substantially the same statements. State v. Burns (Iowa) 94 N. W. 238.

The complaints made with reference to

Digitized by Google

the instructions are substantially as to definitions of seduction and previous chastity. The statement of the court that the jury could take into account, so far as shown by the evidence, the attentions paid to prosecutrix by defendant, the endearing names used, the false promises made, and, in general, anything said or done by him which, in the light of common experience, was likely to break down her virtue, if virtuous, and induce her to submit to him, was certainly not misleading with reference to the case before the jury. There was not the slightest evidence of any promises by defendant except the general promise of marriage, and the further promise, immediately before the intercourse, that he would protect her by marriage and be responsible if the intercourse resulted in pregnancy. Such promises, though false, if made by an accepted lover, certainly may be considered as constituting seductive arts. There was no evidence tending to make out a case of mere mutual passion, aroused without courtship or love, and yielded to by the woman as soon as she had assurance that an unfortunate result would be followed by marriage. On the other hand, the evidence tended to show a case where confessedly the relations had been those of lovers in the proper sense of the term, even though defendant may not have expressed his affection in specific words, and where the woman was unquestionably justified in believing that the promise to marry, if one was made, was in good faith, founded on affection, and not on lust. Such a false promise constitutes a seductive artifice, and, however inexcusable or imprudent it may be for the woman to yield her virtue in response to such solicitation, the act of securing her consent to sexual intercourse by such artifice is a crime on the part of the man.

The same considerations are applicable to the complaint as to instructions on the question of previous chastity. If, without the pretense of love, affection, and purpose to marry on the part of the man, the woman allows him to take indecent liberties with her person, sexual intercourse permitted by reason of passion thus aroused, even though immediately preceded by a promise to marry, might well be said not to constitute seduction, because such course of conduct would show unchastity, which, as we have held, may exist without any act of incontinence. Andre v. State, 5 Iowa, 389, 68 Am. Dec. 708; State v. McIntire, 89 Iowa, 141, 56 N. W. 419. But where such liberties are submitted to by reason of love and affection, engendered by pretended love and affection on the part of the man and promises of marriage, and illicit intercourse finally results, induced by passion thus aroused and such pretenses made, it is for the jury to say whether there is prior unchastity, such as to prevent the intercourse constituting seduction. The mere fact of permitting improper liberties, or yielding under such circumstances, does not prove it. State v. Huges, 106 Iowa, 125, 76 N. W. 520, 68 Am. St. Rep. 288; State v. Hemm, 82 Iowa, 609, 48 N. W. 971.

These considerations were aptly presented to the jury, and we think there was no error in this respect. We may, perhaps, assume that it is in accordance with human experience that improper liberties of speech or action, or of both, are usually submitted to before illicit intercourse is voluntarily indulged in, and we think it would be absurd to say that such fact alone, regardless of the nature of the inducement or artifices preceding it, must render the woman unchaste in such sense that the intercourse thus procured could not constitute seduction.

We find no error in the record, and the judgment is affirmed.

LINGLE et al. v. LINGLE.

(Supreme Court of Iowa. Oct. 7, 1903.)

WILLS—UNDUE INFLUENCE—EVIDENCE—SUFFICIENCY—COSTS.

1. Evidence of advanced age and physical infirmities is insufficient to warrant a finding of testamentary incapacity.

2. Evidence as to the mental and physical condition of testatrix at the time her will was made is admissible on an issue of undue influence.

3. Where instructions are duly excepted to when given, it is not necessary to again except or refer thereto in a motion for a new trial.

4. On a will contest on the ground that proponent had exercised undue influence, instructions relative to the prejudice of testatrix against her grandsons, who were not parties to the record, were not prejudicial to the proponent.

5. Where a will was executed six years before testatrix's death, and remained in her possession, and proponent did not know of its existence or contents until it was opened and read by the clerk of the court, and it appears that proponent acted in good faith in seeking probate, he should not be charged with the costs of the contest, which resulted in favor of contestant.

Appeal from District Court, Clarke County; R. L. Parrish, Judge.

A will contest. Trial to a jury, and verdict and judgment for the contestant. The proponents appeal. Reversed.

Stivers & Slaymaker, for appellants. Temple, Hardinger & Temple and Tallman & Crist, for appellee.

SHERWIN, J. The contestant alleged that the testatrix was mentally incapable of making a valid will, and that the will was procured by the duress and undue influence of the proponents. The record presents no evidence which would warrant a jury or a court in finding that the testatrix was mentally incapable of disposing of her property by will. Her advanced age and physical infirmities when the will was executed were not alone sufficient to prove such total disability mentally. Evidence as to her mental

¶ 3. See Appeal and Error, vol. 2, Cent. Dig. § 1738.

Digitized by Google

and physical condition at the time the will was made was admissible, however, on the issue of undue influence, for what would not be improper influence over a person in sound health might be held improper as to a person in feeble mental and physical condition. The court instructed fully on the issue of actual mental capacity, and therein erred, for the reason we have already stated, and for the further reason that such issue was practically abandoned by the contestant. Stein v. City of Council Bluffs, 72 Iowa, 180, 33 N. W. 455. The instructions were duly excepted to when given, and it was not necessary to again except or refer thereto in the motion for a new trial. Ellis v. Leonard, 107 Iowa, 487, 78 N. W. 246.

The instructions relating to the testatrix's prejudice against her grandsons, who were not parties to the record, were not prejudicial to the proponents, for if the will was the will of the proponents, rather than of the testatrix, it entirely fails. The will was executed some six years before the death of the testatrix, and remained in her possession, in a sealed envelope, until she died, and it was then delivered to the clerk of the court. Neither of the proponents knew of its existence or its contents until it was opened and read by the clerk. It was formally and properly executed, and it was the duty of the proponents to offer it for probate. The record shows conclusively that they were acting in perfect good faith in so doing, and in seeking to have it probated, and no reason appears why they should be charged with the costs of the contest. Kirsher v. Kirsher (Iowa) 94 N. W. 846.

The judgment is reversed.

WHITE et al. v. LEECH et al.

(Supreme Court of Iowa. Oct. 9, 1903.)

DEEDS—PRINCIPAL AND AGENT—FRAUD OF AGENT.

1. Where defendants, one of whom was plaintiff's agent for the sale of his property, represented to plaintiff that a certain farm in another state was a desirable property to trade for, and persuaded him to make the exchange, when in fact the farm was of but small value, and defendants had a secret agreement whereby they afterwards paid the former owner of the farm a certain sum for plaintiff's property, he was entitled to have the exchange annulled and reconveyance ordered.

Appeal from District Court, Lee County; Henry Bank, Judge.

Action in equity to set aside a conveyance of real estate alleged to have been procured by fraud and false representations. There was a decree in favor of plaintiffs, and defendants Leech and Latta appeal. The opinion sufficiently states the facts. Affirmed.

R. M. Marshall and D. F. Miller, for appellants. Casey & Stewart and W. S. Hamilton, for appellees.

BISHOP, C. J. A determination of this case involves consideration of fact questions only. We content ourselves accordingly with a brief statement of the conclusions reached by us from a reading of the record. In November, 1899, appellee Henry Stellern was the owner of a hotel property situated in Montrose, Lee county, this state, consisting of a lot with hotel building thereon, and hotel furnishings and fixtures. We think it fairly appears from the evidence that this property was of the value of about $4,000. The record title of the property stood in the name of appellee Patrick White, father-in-law of Stellern, but he does not make claim to any interest antagonistic to Stellern. Appellants strenuously deny the fact, but we think it may fairly be said that appellant Leech was employed as an agent by Stellern to find a purchaser for said property. Leech ascertained that defendant Jacox owned a tract of land in western Kansas, consisting of 240 acres, which could be purchased for $700. Such evidence as there is in the record bearing upon the subject tends to prove that the Kansas land was in fact unbroken prairie, and practically of but trifling value. Leech informed Stellern of this land, and, notwithstanding he had no knowledge upon the subject, he represented that it was a farm with improvements, and partly under cultivation, and a desirable property to trade for; that an even exchange of the hotel property could be made therefor. Finding that Stellern was favorably disposed to make a trade, Leech advised his friend and business associate, appellant Latta, of the condition of affairs, and a plan was at once formed and entered upon between them to procure a trade of properties to be made as follows: A secret arrangement was to be made with Jacox for the purchase by them of the Kansas land for the sum of $700, Jacox to convey direct to Stellern. A conveyance of the hotel property was to be procured from Stellern to Jacox, thus giving the former to understand that it was an exchange of properties, pure and simple. Thereafter, and in consideration of the $700 paid him, Jacox was to convey the hotel property to appellants Leech and Latta. Jacox was seen, and consented to a sale, and to make deeds as requested. Stellern fell into the trap, and the plan was worked out as contemplated. Such were the facts as found by the court below, and we have no difficulty in reaching the conclusion that the finding was warranted by the evidence. Upon ascertaining the character of the Kansas land, and within a reasonable time, Stellern brought this action to set aside the conveyance made by him, and offering to reconvey the Kansas land.

Such being the condition disclosed by the record, it requires neither argument nor authority to reach the conclusion that the decree was right, and should not be disturbed. By the decree the court below reserved the right to subsequently determine, upon further showing, to whom, as grantee, should be made the deed of the Kansas land. The

Digitized by Google

cause will accordingly be remanded for that purpose.

A motion made by appellant to strike an amended abstract filed by appellee was submitted with the "case." We have examined the motion and the respective showings made, and conclude that the motion should be overruled.

Affirmed.

STATE v. BRAFFORD.

(Supreme Court of Iowa. Oct. 7, 1903.)

CRIMINAL LAW—ROBBERY—EVIDENCE — SENTENCE—MISCONDUCT OF COUNTY ATTORNEY—OBJECTION—NECESSITY.

1. Where, in a prosecution for robbery, prosecutor identified defendant as one of two persons who stopped him on a public street, and after compelling him, by presentation of a revolver and threats to kill him, to throw up his hands, one of them robbed him of the contents of his pockets, and the only evidence on defendant's behalf was the testimony of his wife and another woman that defendant was at home during the evening on which the robbery was committed, the evidence was sufficient to sustain a conviction.

2. Under a statute fixing the penalty for robbery at not less than 10 nor more than 20 years' imprisonment, where defendant was convicted of robbing prosecutor in a public street of the city, by compelling him to throw up his hands on presentation of a revolver and threats to kill him, a sentence of 17 years in the penitentiary was not excessive.

Appeal from District Court, Polk County; A. W. Wilkinson, Judge.

Prosecution for robbery, committed by defendant while armed with a deadly weapon. The jury returned a verdict of guilty, and defendant was sentenced to 17 years in the penitentiary. Defendant appeals. Affirmed.

Walter McHenry and Spurrier, Forbes & Mills, for appellant. Chas. W. Mullan, Atty. Gen., and Chas. A. Van Vleck, Asst. Atty. Gen., for the State.

PER CURIAM. With reference to appellant's claim that the verdict is not supported by the evidence, it is enough to say that the prosecuting witness in his testimony fully identified the defendant as one of two persons who stopped him on a public street in Des Moines, and, after compelling him, by the presentation of revolvers and threats to kill him, to hold up his hands, one of them robbed him of the contents of his pockets. The only showing in behalf of defendant was the testimony of his wife and another woman, who was a neighbor, that he was at home during the evening on which the robbery was committed. The conclusion of the jury was sufficiently supported by the evidence, and there is no occasion for us to interfere.

Misconduct of the county attorney in the closing argument to the jury is urged, consisting, as alleged, in the use before the jury, by way of illustration, of a revolver, which had been produced from the custody of the clerk, apparently with the intention of making it an exhibit, but which was not introduced in evidence. The difficulty with this claim is that the misconduct appears only by statements of counsel made to the trial court, and that no objection to the action of the county attorney was interposed at the time. By way of excuse for not making objection, counsel urge that the trial judge was absent from the courtroom, but the fact seems to be that the trial judge, though absent during defendant's argument, had returned to and was in the courtroom when the closing argument of the county attorney was commenced, and was present during its continuance. At any rate, the showing is such as would justify such a finding by the court, and, under the circumstances, we would not be warranted in interfering with his ruling.

Complaint is made that the sentence is excessive, but the statutory penalty for the offense is imprisonment in the penitentiary for not less than 10 nor more than 20 years. Certainly, if the defendant committed the crime under the circumstances shown by the evidence of the prosecuting witness, which as to such circumstances is uncontradicted, the case was an aggravated one, and a severe sentence was justified.

No error appearing from the record, the judgment of the trial court is affirmed.

STATE v. CARTER.

(Supreme Court of Iowa. Oct. 7, 1903.)

CRIMINAL LAW — JURORS — QUALIFICATION—EXAMINATION OF DEFENDANT—IMPEACHMENT—EVIDENCE—MATERIALITY.

1. Code, § 5360, provides that in a criminal case a juror standing in the relation of guardian and ward, master and servant, landlord and tenant, or being a member of the family of defendant, is subject to challenge for cause. *Held*, that the relation of attorney and client between a venireman and the county attorney is no ground for challenge in a criminal case.

2. Under Code, § 4613, providing that a witness may be interrogated as to his previous conviction of a felony, a witness may be asked as to whether he had been convicted of obtaining a signature to a note by false pretenses, the same being a felony.

3. On a prosecution for larceny of cattle, which had been driven to the town of K., and there found in defendant's possession, defendant testified that he met a stranger in A., several miles from K., and that he purchased the cattle from him, having ascertained by telephone that the cattle were then in the cattle yards at K., and that he paid $800 cash. On cross-examination he was asked if on leaving his boarding house the evening preceding the larceny he had not stated to a certain person that he only had 75 cents, and that he was going to K., and the person to whom the statements were claimed to have been made testified to them in rebuttal. *Held*, that the statements so made were so inconsistent with his evidence as to be proper subjects for cross-examination, and basis for impeaching testimony.

Appeal from District Court, Boone County; J. R. Whitaker, Judge.

Indictment for larceny of 23 head of cattle.

Digitized by Google

From a judgment of conviction, defendant appeals. Affirmed.

Spurrier, Forbes & Mills, for appellant. C. W. Mullan, Atty. Gen., and C. A. Van Vleck, Asst. Atty. Gen., for the State.

WEAVER, J. No contention is raised that the evidence is insufficient to support the verdict. It tends to show that on the night of April 19, 1901, 23 head of cattle were stolen from the herd of Ira Luther, in Boone county, and driven eastward to the town of Kelly, in Story county. At that point appellant was in possession of the cattle, and shipped them to Chicago. On the trial he sought to explain his possession of the cattle by saying that he met a stranger in Ames, several miles distant from Kelly, who claimed to have a car load of cattle at the latter place which he wished to sell, and that after some negotiation, and having ascertained by telephone that the cattle were in fact in the yards at Kelly, he bought them, paying $800 in cash, and giving his note for $200. It was shown that on the night of the larceny appellant was in Boone county not far from Luther's premises, where the cattle were kept, and on that day or evening left his boarding place, with the statement that he was going to Ames. These facts, with others given in evidence, abundantly sustain the verdict, and there is no reason for interfering with it, unless we find reversible error in the matters complained of in argument.

1. In the course of impaneling the jury, one Sparks was called into the box, and was challenged on the ground that Hon. D. R. Hindman, who was assisting the county attorney in the trial of the case, was acting as the juror's attorney in another matter. The challenge was overruled, and error is alleged thereon. In support of this exception we are cited to section 5360 of the Code, which provides that a juror "standing in the relation of guardian and ward, master and servant, landlord and tenant, or being a member of the family of the defendant," is subject to challenge for cause. The challenge under consideration does not come within the terms of this statute. The subdivision quoted from has reference entirely to those relations between the defendant and the juror which may be made a ground of challenge. If it had been intended to make the relation between the juror and counsel a sufficient objection, it was easy to so provide in specific terms, as has been done in the matter of challenges in civil cases. Code, § 3688. It may be furthermore remarked, in reference to the case before us, that the record does not show that the juror objected to served upon the trial, or that appellant exhausted all his peremptory challenges. There was no error in the ruling.

2. The appellant, having testified in his own behalf, was asked upon cross-examination whether in the year 1897 or 1898 he was not tried and convicted in Warren county upon a charge of obtaining a man's signature to a promissory note by false pretenses. Objection to this interrogation being overruled, the appellant answered: "I do not know whether I was or not. * * * I do not know as you would call it convicted. I never served any sentence for anything of that kind, and never a day in jail or prison in my life serving time." Appellant concedes that, under Code, § 4613, "a witness may be interrogated as to his previous conviction of a felony," but if we understand the argument of counsel, it is contended that the question must be substantially in the language of the statute, and that to ask the witness whether he has ever been convicted of any specific crime is not allowable. The cases relied upon by counsel do not announce any such construction of the statute. In Hanners v. McClelland, 74 Iowa, 318, 37 N. W. 389, the question put to the witness was, "Were you ever convicted of crime?" The objectionable feature of this question is made clear by the language of the opinion to the effect that "all crimes are not felonies; hence the question as framed was improper." In State v. Brown, 100 Iowa, 50, 69 N. W. 277, the question was, "Are you not the same Edwin Bird who was arrested for the burglary at John Rose's?" In condemning this manner of cross-examination, we said: "The fact of being arrested was immaterial, unless there was a conviction." The effect of these decisions is that the cross-examination of a witness along this line must be confined to inquiry concerning his conviction for felony, but they do not hold, nor do we see any reason for saying, the question may not direct the witness' attention to the specific felony of which it is claimed he was convicted. The appellant was asked, in substance, whether he had been tried and convicted of the crime of cheating by false pretenses, which is a felony under the statute, and therefore, as we view it, within the line of inquiry authorized by law.

3. On further cross-examination of the appellant, his attention was directed to the time when he left his boarding place on the evening preceding the larceny, and was asked: "Did you not state there to Nick Plummer that all the money you had in your pocket was 75 cents?" He was also asked whether, as he started away that evening, he did not state to Plummer that he was going to Kelly, but being short of money, would stop at a Mr. Judges, in the country, and thus avoid hotel expenses; also, whether he did not say to the same person that he would take the road north and then east, because upon the road south and east there was a slough that he did not wish to pass through. All these questions were allowed over appellant's objections to their materiality, and on rebuttal the state was permitted to call Plummer, who testified that appellant did, at the time and place specified, make the statements to which his attention was called. It is said in argu-

Digitized by Google

ment that a witness cannot be impeached by calling out his answers upon immaterial matters, and then proving the falsity of such answers. The rule as stated is elementary, but the matters to which the witness' attention was directed were clearly material. It is appellant's claim that on the evening in question he had at least $800 in money upon his person, with which he purchased the stolen cattle on the following morning. He also testifies that on leaving his boarding place that evening he intended to go, and did in fact go, to Ames, and not to Kelly, and attempts to describe minutely his movements from the time he started until the next morning. If, then, he said to the witness Plummer he had little or no money, or that he was going to Kelly, and gave a reason for taking the north road instead of the south road to that town, we think the statements were so far inconsistent with the story told by him on the witness stand that the prosecution could rightfully inquire into them upon cross-examination, and upon his denial thereof to introduce impeaching testimony.

No other error is presented for our consideration. So far as the record shows, appellant had a fair trial. His guilt was established beyond a reasonable question, and no sufficient cause is shown for interference with the verdict of the jury.

The judgment of the district court is affirmed.

STATE v. KING.

(Supreme Court of Iowa. Oct. 6, 1903.)

LARCENY — RECENT POSSESSION — EXPLANATION—QUESTIONS FOR JURY—PRESUMPTION OF GUILT—INSTRUCTIONS—EVIDENCE — ADMISSIBILITY.

1. Where accused explains his possession of stolen property by stating it was pledged to him by a stranger to secure a loan, the truthfulness of the explanation is for the jury's determination.

2. Where the evidence is circumstantial, proof of good character is not so far defensive as to overcome any inference of guilt to be drawn therefrom, as it is to be given only such weight as the jury may deem it entitled to receive.

3. Where accused explains his possession of a watch claimed to have been taken from his roommate by stating it was pledged to him by a stranger, an instruction that such possession cast on accused the burden of explaining how the watch came into his possession is not objectionable as casting on him the burden of establishing his innocence.

4. In a prosecution for the larceny of a watch from the roommate of accused, the rejection of testimony showing who his roommate had been with before returning to his room was without prejudice, as the mere fact that he had been with some one did not implicate such person, in the absence of other incriminating circumstances.

5. Where, on a prosecution for larceny of a watch from his roommate, accused did not claim that on retiring he supposed the door fastened, nor deny stating to his roommate that he had forgotten to lock it, the exclusion of evidence by accused as to whose duty it was to lock the door was without prejudice.

6. Where prosecuting witness on a trial for larceny has stated on direct and cross examination that his pocketbook had only a few pennies in it, a repetition of the question whether his money was in the pocketbook is properly excluded.

7. Where accused explained his possession of a stolen watch by stating it was pledged to him by a stranger for a loan of money, and a corroborating witness stated such stranger first proposed to borrow from him, and he told him he did not have it, the refusal to permit him to state why he did not loan the money was without prejudice.

8. Where accused explained his possession of a stolen watch by stating it was pledged to him for a loan, and a corroborating witness subsequently testified the money was to be returned at a certain time and place, the refusal to permit him previously to state the arrangement as to the return of the money was not prejudicial.

9. A statement by one accused of larceny that, after he received the watch from a stranger, some one called the corroborating witness, and he supposed it was an acquaintance, is properly excluded as to the supposition.

10. In a prosecution for larceny from a roommate, evidence as to whether any burglaries were committed in an adjoining building during the same night is inadmissible.

Appeal from District Court, Polk County; S. F. Prouty, Judge.

The defendant was convicted of larceny from a building, and appeals. Affirmed.

C. C. Cole, for appellant. Chas. W. Mullan, Atty. Gen., and Chas. A. Van Vleck, Asst. Atty. Gen., for the State.

LADD, J. One Holland returned to his room at 11 o'clock p. m., Saturday evening, March 22, 1902, and immediately retired. The accused, who had been occupying the same room since the Monday previous, was playing at solitaire. Both were attending school, and had been made acquainted by a mutual friend with whom defendant was to room after one week. When Holland arose the next morning, he discovered that his watch and a small amount of money had been stolen. The police were notified, and shortly after April 1st the watch was located in a pawnshop. The defendant had caused his name to be inscribed on the case, and had pledged it that day for a loan of $5 in the name of Henry Wilson. A few days later, upon returning for an additional dollar, he was informed that the watch was stolen property, and, upon inquiry by the proprietor, gave his then place of residence. Some days before he had pledged it at another shop for a loan of $3 in his own name, having subsequently redeemed it. On the trial he attempted to explain this recent possession of the stolen property by saying that on Monday morning after the larceny, while on the street with one Hillman, a stranger named Medbury, whom he had met once before, approached the latter, and requested a loan of $5, offering to put up his watch as security; that, as Hillman did not have the money, he made the loan; that Medbury represented himself to be a traveling man, and expecting money by wire before noon; that the money was to be returned, with 50 cents for its

1, 3. See Larceny vol. 32. Cent. Dig. §§ 129, 199.

Digitized by Google

use, at that locality, at noon of the same day; that, though defendant was there at the appointed time, the borrower did not appear, and for this reason the watch was forfeited by the terms of the loan. This story is fully corroborated by the testimony of Hillman, and, appellant insists, so fully explains the possession of the watch that the finding of the jury ought not to stand. Medbury was not called as a witness, and, though the transaction is said to have taken place little more than 24 hours after the larceny, no mention of it is shown to have been made to Holland, whose watch appellant claims to have never seen. His excuse for pledging the property at the last shop in a fictitious name is that the shops were inspected by the police, who required a report of the names of all patrons, among whom we infer he did not care to have his name appear. The pretense that recent possession of stolen goods has been obtained by purchase from a stranger is an explanation commonly interposed by those accused of the larceny, and, it may be added, when somewhat discredited by the attending circumstances, as in this case, as commonly rejected by the good sense of jurors. State v. Marshall, 105 Iowa, 38, 74 N. W. 763. The story bears ear marks of fabrication. For a stranger to approach a couple of schoolboys for a loan of this kind on the principal street was somewhat remarkable, and especially so soon after his roommate's watch had been stolen. Still more remarkable was it that the suspicions of the defendant, who knew of the theft of such an article within a few hours previous, were in no way aroused. Strange that he should redeem the watch at the shop where first deposited in his name, and so soon afterwards pawn it at another in a fictitious name. Curious that he did not wish the police of the city to know his name, especially after he had suggested to Holland, on the morning after the watch was stolen, that it would doubtless be pawned by the thief. Without elaboration, it is sufficient to say that the truthfulness of the explanation was solely for the jury's determination.

2. But appellant insists that, as the evidence was purely circumstantial, the proof of good character ought to be held so far defensive as to overcome any inference of guilt to be drawn therefrom. Such evidence, however, has been frequently declared to afford no defense. It is received as merely tending to show that the accused would not have been likely to have committed the crime charged, and is to be given such weight only as the jury may deem it entitled to receive. State v. House, 108 Iowa, 68, 78 N. W. 859; State v. Northrop, 48 Iowa, 583.

3. The court gave the usual instruction with respect to the presumption arising from the recent possession of stolen property, and submitted particularly the explanation offered by the defendant. The criticism that it cast the burden of establishing his innocence upon the accused is disposed of by State v. Hessians, 50 Iowa, 135, and State v. Richart, 57 Iowa, 245, 10 N. W. 657. But it is said this rule ought not to be applied where the property is alleged to have been taken from a building. The last of the above decisions is an authority to the contrary. There are cases, doubtless, where the presumption would not extend beyond the mere fact of larceny to that from a building; but when, as in this case, it must have been committed from the building—the room—or not at all, we think the presumption extends to the offense charged, and that precisely the same inference arose as where one charged with the crime of burglary is found in the recent possession of property stolen in committing that crime. State v. Swift (Iowa) 94 N. W. 269; State v. Golden, 49 Iowa, 48; State v. Rivers, 68 Iowa, 616, 27 N. W. 781; State v. Frahm, 73 Iowa, 355, 35 N. W. 451; State v. Yohe, 87 Iowa, 33, 53 N. W. 1088. The contention that important facts are omitted in enumerating those to be taken into consideration, and that the instruction is in the nature of an argument for conviction, is utterly without foundation.

4. On cross-examination Holland testified that he had not been drinking the evening prior to the larceny, and that on the way home between 10 and 11 o'clock p. m. he had counted his money, some two or three dollars. "Who had you been with?" was then asked by defendant's counsel, and the objection that the question was immaterial, and not cross-examination, sustained. This ruling is said to be erroneous for the reason that an answer would have tended to point out Holland's associates, and aided in identifying the person who committed the larceny. All proven by Holland was that his watch had been stolen from the room, and this answer would not have affected such proof. The mere fact that he had been with some one the night previous would not have tended to implicate such person, and, in the absence of all other incriminating circumstances, the rejection of the answer must be regarded as without prejudice.

5. Holland testified that, when asked why he had not locked the door, defendant answered that he had forgotten it, and then this question was propounded: "Was it not your business to lock the door when you came in there?" The same objection last interposed was sustained. It is to be observed that the question does not call for any previous understanding between the parties, but simply for the witness' conception of what was his duty, and this we conceive to be wholly immaterial. But the defendant, when on the stand, was asked, "Was there any arrangement between you as to who should lock the door that night?" The answer to this, it is claimed, would have shown that the last coming in was to lock the door, and that this would have met the argument that defendant was last to bed, and had purposely

left the door unlocked, so that it might appear that some one from the outside had entered and committed the larceny. If this were the purpose, the question failed to indicate it. He had not claimed that on retiring he supposed the door fastened, nor did he deny saying to Holland that he had forgotten to lock it. If he knew it was unlocked, evidence that Holland ought to have attended to that would in no way relieve the accused. While the court might well have ruled the other way, we are convinced that the exclusion of the testimony, in the state of the record as presented, did not exert the slightest influence on the conclusion of the jury.

6. Holland, after saying both on direct and cross examination that his pocketbook had but a few pennies in it, was asked to tell "whether your money was not in your pocketbook"? The objection was properly sustained, in the absence of specific objection. The court is not bound to allow endless repetitions, and, after a subject had been exhausted, may properly, even on its own motion, put an end to the inquiry. Hillman had testified that the stranger from whom the watch was said to have been obtained first proposed to borrow $5 from him, and that he had told him he did not have it, unless King had some money he would let him take, and later was asked, "Why did you not let him have the $5, and take the watch?" Appellant argues that this was material, as tending to show that the refusal was owing to want of means, rather than any doubt of the stranger's good faith. But the ground of refusal had been stated in detailing the transaction. Moreover, the state of Hillman's mind was wholly irrelevant to the controversy. Hillman was also asked: "What arrangement was made about the $5? Was it to be returned?" As he subsequently testified that the money was to be returned at noon of the same day, and at the same place, the ruling, even if erroneous, was without prejudice. The defendant, in relating the story of the interview with the stranger, testified that as they were turning from the entrance to a bowling alley "somebody called Hillman to one side. I supposed it was an acquaintance of his." Thereupon the state "objected to that supposition," and upon motion it was stricken out. The ground of objection is included in the designation of the remark as a supposition, and manifestly it was properly stricken. One Lamb testified that he lived in a flat adjoining the one in which Holland and defendant roomed, that there was no communication between the apartments except at the outer entrances, and was then asked whether any burglaries were committed therein on the night in question. Objection to this and to other questions of similar import were sustained, and, we think, properly so. The evidence had no bearing on the issues involved. No one would claim that the state might have offered proof that defendant in fact committed the burglaries intimated as tending to establish his guilt. That some one else may have done so in no manner indicates his innocence of the larceny charged.

The record is without prejudicial error, and the judgment must be and is affirmed.

STATE v. BEBB.

(Supreme Court of Iowa. Oct. 7, 1903.)

RAPE—WANT OF CONSENT—COMPLAINT OF PROSECUTRIX—EVIDENCE—ADMISSIBILITY—INSTRUCTIONS.

1. Where prosecutrix is attempting to explain her silence, testimony by her as to her complaint to her aunt, made more than three months after the commission of the alleged crime, with explanation of the delay, is not incompetent, since failure to make complaint affected her credibility.

2. Statements by accused to prosecutrix at the time of the commission of the crime with her as to his illicit relations with other women are admissible as res gestæ.

3. Where prosecutrix, a child under 15 years of age, was apparently pregnant at the time of the trial, and had stated that she had had intercourse before the crime of accused, the refusal to permit accused to ask her whether she had not had intercourse with other men is not prejudicial.

4. On a prosecution for rape, a notice by the state, under Code, § 5373, of intention to introduce a witness to prove that on the day of accused's arrest he stated he intended to have another person arrested, is sufficient to allow testimony by the witness that accused stated there were others guilty besides himself.

5. Testimony that accused, after his arrest, asked witness which side he was called to testify on, and stated, if he could do him no good, not to do him harm, is not prejudicial.

6. Where an indictment for rape of a child under the age of consent charges the crime to have been committed with violence and against her will, the jury can convict if they believe accused had intercourse with her, though her testimony as to her resistance and want of consent was not believed.

Appeal from District Court, Muscatine County; A. J. House, Judge.

Prosecution for rape committed upon a female child under the age of 15 years. From judgment on verdict of guilty as charged, defendant appeals. Affirmed.

Clymer A. Coldren and Jayne & Hoffman, for appellant. Chas. W. Mullan, Atty. Gen., and Chas. A. Van Vleck, Asst. Atty. Gen., for the State.

McCLAIN, J. Several objections are argued as to admission of testimony and in the giving of instructions, which it will be sufficient to consider very briefly. Objection was taken to the testimony of prosecutrix as to the fact of complaint to her aunt, made more than three months after the commission of the alleged crime. Failure to make complaint would have been a circum-

¶ 1. See Rape, vol. 42, Cent. Dig. §§ 67, 70.

Digitized by Google

stance affecting the credibility of her testimony, and she had a right to show that complaint was made, and to give, as she did, an explanation of why it was not sooner made. For this purpose remoteness of the time of making the complaint from the time of the commission of the alleged offense would be immaterial. The circumstance of delay would go to the credibility of her statement that the crime was committed by force and against her will. But her statement that it was in fact made at a remote time would not, therefore, be incompetent. State v. Wolf (Iowa) 92 N. W. 673; State v. Peterson, 110 Iowa, 647, 82 N. W. 329; State v. Mulkern, 85 Me. 106, 26 Atl. 1017; State v. Niles, 47 Vt. 82. Where it is sought to show by others that complaint by the injured female was promptly made, in order to corroborate her own testimony that the act of defendant was accomplished by violence and against her will, there would be more reason for excluding the evidence entirely if it related to a complaint long after the alleged commission of the act. But where the prosecutrix herself is attempting to explain her silence, certainly testimony by her as to a tardy complaint, with explanation of the delay, could not, in any case, be incompetent, for, so far as her testimony tended to show an unreasonable delay, it would be against her, rather than in her favor. It is as against the objection that the testimony of the person to whom the complaint was made relates to hearsay or declarations of the prosecutrix in her own interest that the question of competency arises. There was no error in the court's ruling in this respect.

Complaint is made of the admission of the testimony of prosecutrix as to something said to her by defendant at the time of the commission of the alleged crime with reference to his having had illicit relations with another woman. But it appears that such statements of defendant, if made, were at the very time of the commission of the crime, and they were clearly admissible as a part of the res gestæ. They were a part of the very transaction in question, and the testimony was properly admitted.

On cross-examination of prosecutrix the attorney for the defendant repeatedly asked her at different stages whether she had not had sexual intercourse with other men than the defendant prior to the acts of the defendant. The court ruled out these questions on the ground that it was immaterial, with reference to defendant's liability, whether prosecutrix had previously had connection with other men or not, and this ruling was sound on general principles. But it is now argued that, inasmuch as it was apparent to the jury, and fully conceded on both sides, that prosecutrix was pregnant at the time of the trial, defendant should have been allowed to show that this condition may have been the result of intercourse with other men than the defendant, for the purpose of counteracting any sympathy with the prosecutrix which might have been aroused by reason of her condition. However this may be, it appears from the record that prosecutrix was allowed, without objection, to state, in answer to one of the questions, that she had had sexual intercourse before the alleged crime of the defendant. The defendant, therefore, had the fact before the jury, and could not have been prejudiced by any ruling on the subject.

One witness for the prosecution was allowed to testify who had not been examined before the grand jury, and it is claimed that the notice given by the state of the intention to introduce him as a witness was not sufficiently specific as to the substance of what the prosecution expected to prove by him. See Code, § 5373. The notice stated that it was expected to prove by this witness that on a certain day he helped to arrest the defendant, and while in his company on that occasion the defendant said that he had a notion to have another person named arrested, as he was the guilty person. The testimony given by the witness was, in substance, that defendant said, while in company with the witness, "There are others guilty besides me." It is not required that the testimony of the witness be confined to the facts specifically stated in the notice as those which it is expected to prove by the witness. State v. Harlan, 98 Iowa, 458, 67 N. W. 381; State v. Yetzer, 97 Iowa, 423, 66 N. W. 737. The notice in this case sufficiently advised the defendant that the witness would be asked to testify with reference to statements made by the defendant after his arrest in witness' presence. This was sufficient to advise the defendant of the nature of the testimony which it was expected the witness would give, and to cover the testimony which the witness did give as to the statements made by the defendant in his presence at the time and under the circumstances stated in the notice.

Complaint is made that a witness was allowed to testify that defendant, after his arrest, asked him which side he was called to testify upon, and said to him, "For God's sake, if you can't do me good, do me no harm." While this testimony seems not to have been very material, it certainly could not have been prejudicial.

Several of the instructions given are complained of, but we find no merit in the objections made. The substance of the objections in general is that, although the indictment charged the crime to have been committed with violence, and against the will of prosecutrix, and the testimony of prosecutrix was that the act was committed in this manner, yet the court left the jury free to convict, even though they found that the act was not against the will or without the consent of the prosecutrix, if she was under

Digitized by Google

15 years of age at the time of the commission of the alleged crime. The very crime charged in the indictment, however, was that of rape committed by having sexual intercourse with a female under the age of consent, and it was immaterial that the indictment charged the act to have been also accomplished by violence and without her consent. If the jury believed that the defendant had sexual intercourse with the prosecutrix, she being under the age of consent, it was their duty to convict, even though her testimony as to her resistance and want of consent was not believed. False statements by her as to circumstances of the commission of the crime would not be reason for acquitting the defendant. Without further elaboration, we may say that we have carefully examined the instructions complained of, and find no error to have been committed in giving them.

The contention on which counsel for appellant principally rely is, however, that there was not sufficient evidence to support the verdict, and as to this we may properly repeat the suggestion already made with reference to the instructions. There are various circumstances disclosed by the evidence tending to discredit the testimony of prosecutrix that she resisted with all her strength, and made a loud outcry. But even as to this matter it is worthy of consideration that the prosecutrix was a child of scarcely more than 12 years of age, and that defendant was twice as old. In the hands of a full-grown and strong man it is not to be expected that a mere child should make any very effective resistance, nor can it be supposed that she would make any very loud outcry. The crime is charged to have been committed in a barn, and the mother and sisters of prosecutrix, and perhaps other persons, were about the house, some distance away. It is not at all incredible that such outcry as a child would be able to make under such circumstances would not attract the attention of persons otherwise engaged at a considerable distance and out of sight. But the more important consideration is that, even though the jury wholly disbelieved what prosecutrix said as to a struggle and outcry, nevertheless, if they believed that defendant had carnal intercourse with prosecutrix, it was their duty to convict. There was sufficient evidence to sustain a finding by the jury that defendant had carnal intercourse with prosecutrix, and this is as far as it is necessary for us to go in the discussion of the evidence. There was the usual denial by defendant as a witness of the fact of any sexual connection with the prosecutrix, but this denial is discredited by testimony as to his declarations soon after his arrest, and by testimony of some witnesses who impeached his credibility.

We see no reason for interfering with the conviction, and it is therefore affirmed.

MARR v. BURLINGTON, C. R. & N. RY. CO.

(Supreme Court of Iowa. Oct. 7, 1903.)

CONTRACTS—STATUTE OF FRAUDS—PLEADING—CONSIDERATION—SETTLEMENT.

1. In an action on a contract within the statute of frauds, an objection that it was not in writing must be raised by demurrer, and not by answer.

2. When parol evidence of a contract within the statute of frauds is introduced without objection, it cannot afterwards be objected to on appeal.

3. A contract whereby a restaurant keeper agreed to board a certain number of men in consideration of the other party paying her a certain amount per week for each of the boarders, was not within Code, § 4625, as a contract to answer for the debt of another.

4. A restaurant keeper, who was averse to boarding certain nonunion men, who were taking the places of strikers, she fearing that to do so would injure her business, agreed to board them in consideration of defendant's furnishing a certain number of men for at least six months, paying her a certain price for each boarder. *Held*, that the contract was not without consideration.

5. The restaurant keeper not having gone out of business until after defendant, in violation of the contract, refused to send her any more men to board, and she then being without any business, in an action on the contract by her, a claim that she had disabled herself from the execution of the contract by going out of business was untenable.

6. A restaurant keeper agreed with defendant to board certain men in consideration of defendant furnishing the boarders for a certain length of time, and paying their board. Before the expiration of the time defendant ceased to furnish the boarders, and a son of the restaurant keeper, on calling at defendant's office, after the boarding ceased, was paid the amount due for board actually furnished. *Held*, in an action by plaintiff for breach of contract, that such payment did not amount to a settlement of the claim in suit.

7. A motion for a new trial is addressed to the discretion of the trial court.

8. A restaurant keeper agreed to board certain men in consideration of defendant furnishing such boarders for a specified time and paying their board, the boarders being nonunion men, who were taking the places of strikers, and the restaurant keeper being reluctant to board them for fear of injuring her business. Defendant failed to furnish the men for the specified time, and, plaintiff's business being ruined by the transaction, she sued for damages. *Held*, that after direction of a verdict for defendant it was no abuse of discretion to grant a new trial.

Appeal from Superior Court of Cedar Rapids; James H. Rothrock, Judge.

Action to recover for breach of an alleged contract. The facts will be found stated in the opinion. At the close of the evidence for plaintiff the court, on motion, directed a verdict in favor of defendant. Thereafter a motion for new trial was made by plaintiff, and this was sustained. From the order granting new trial, defendant appeals. Affirmed.

J. C. Leonard and S. K. Tracy, for appellant. Rickel, Crocker & Tourtellot and Wm. Chamberlin, for appellee.

¶ 1. See Frauds, Statute of, vol. 23, Cent. Dig. § 365.

Digitized by Google

BISHOP, C. J. Plaintiff kept a boarding house or restaurant in Cedar Rapids, and her claim is, in substance, that in April, 1901, defendant, through its officers and agents, entered into a contract with her, by which defendant was to furnish her with at least 60 regular boarders, employés of defendant, for a period of at least six months, the defendant to pay to her the sum of $3.50 per week for each of such boarders. It is alleged that she consented to take such boarders at the price named, and did thereafter provide board for all the employés of defendant sent to her, but that the average number thereof did not exceed 20; and that about June 13, 1901, defendant renounced and refused to further comply with the contract. Plaintiff says that the fair profit which she would have realized on each boarder would have been 75 cents per week. The answer is a general denial, and, in addition thereto, the statute of frauds and a full settlement are pleaded. From the evidence introduced by plaintiff upon the trial the jury would have been warranted in finding the facts to be as follows: On April 28, 1901, certain of the officers of the defendant company came to plaintiff's restaurant, and requested her to take to board a lot of nonunion men whom the defendant company had brought in to take the place of its striking employés. Plaintiff objected, saying she was afraid to take the men, because they were nonunion men; that she would be talked mean about for having scabs, and that it would ruin her trade. Defendant's officers assured her that the railroad company would back her, and that, if she would take the men, they would fill her house with an average of 60 men, at least; that she could count on the arrangement lasting at least six months, and that the company would pay the board of all the men at the rate of $3.50 per week. To this she finally consented. The defendant furnished her and paid for an average of 20 men until June 13th, when it refused to carry out the arrangement any further. In the meantime all the other boarders of plaintiff left her, and, having no business, she was compelled to and did close up her house. That there would have been a profit on the business, had the arrangement been carried out, is not questioned.

Defendant says the order granting the new trial should be reversed, and judgment entered on the verdict, for reasons which we will now proceed to consider. It is said, in the first place, that the oral contract sued upon was within the statute of frauds, there being no written or competent evidence to establish the same. The particular section of the statute relied upon is as follows: "Sec. 4625. Except when otherwise specially provided, no evidence of the following enumerated contracts is competent unless in writing and signed by the party charged, or by his authorized agent: * * * 3. Those wherein one person promises to answer for the debt, default or miscarriage of another," etc. That the contract here relied upon was not reduced to writing appears from the allegations of the petition. No objection was made by demurrer, and the record does not disclose that any objection was made at the time the oral evidence was offered. It is not sufficient to raise the objection by answer alone. Wiseman v. Thompson (Iowa) 63 N. W. 346; Graves v. Clark (Iowa) 69 N. W. 1046. When parol evidence of a contract within the statute of frauds is introduced upon the trial without objection, it cannot afterwards be objected to upon appeal. Crossen v. White, 19 Iowa, 109. But, if this were not so, the objection is not well taken. The agreement was with the company to board its employés, and plaintiff was to be paid by the company. There was no promise to answer for the debt, default, or miscarriage of another.

It is next said there was no consideration for the alleged contract. It does not appear that this ground of defense was raised in any way, either by pleading or in the motion to direct a verdict, in the court below. But, even if we might disregard the question as being raised in this court for the first time, we prefer to dispose of it on its merits, in view of a further trial of the case. In doing so, we need say no more than that plaintiff was induced by the promises of defendant's officers to take the chances of having her business ruined by taking the men to board. The result was as she feared. We think the consideration was sufficient. See 1 Parsons on Contracts, 451; Blake v. Blake, 7 Iowa, 46; Harlan v. Harlan, 102 Iowa, 701, 72 N. W. 286.

In the third place, it is said that plaintiff, by her own acts, disabled herself from the execution of the contract, by going out of business. This ground cannot be sustained. The plaintiff did not go out of business until after defendant refused to send any more men to board, and she then found herself without any business. Defendant had no right to expect her to keep her doors open and her empty tables waiting for the men it had refused to longer send to her.

Finally, it is said that the whole claim of plaintiff was settled, and full accord and satisfaction had thereon, before this suit was brought. The evidence simply shows that the son of plaintiff went to the office of defendant after the boarding of the men ceased, and there was paid to him the amount due on board which had actually been furnished. This did not of itself amount to a settlement of the claim here sued upon.

We have not undertaken to discuss any questions save those directly raised by the assignments of error. A motion for a new trial is addressed to the sound discretion of a trial court, and such discretion will not be interfered with except in cases of abuse. There was no abuse of discretion in granting a new trial in this case, and the order is affirmed.

Digitized by Google

THAYER v. SMOKY HOLLOW COAL CO.

(Supreme Court of Iowa. Oct. 7, 1903.)

MASTER AND SERVANT—NEGLIGENCE—CONTRIBUTORY NEGLIGENCE—SAFE PLACE TO WORK—MINES—FAILURE TO PROP ROOF—CUSTOM—EVIDENCE—INSTRUCTIONS.

1. In an action by a servant against the master for injuries, evidence of custom and usage on the question as to whether it was the duty of the master or the servant to inspect and care for the place of work is not inadmissible as varying any rule of law, or, in the absence of express stipulations, any definite contract relation.

2. In an action by a servant against the master for injuries, evidence as to the custom and usage on the question as to whether it was the duty of the master or the servant to inspect and care for the place of work is admissible, though not pleaded, where it is not sought to change a contract, but the duty grows entirely out of custom.

3. A qualified witness may state the usage of a certain business when the question is material.

4. In an action by a servant against the master for injuries, a usage being shown whereby it was the duty of the master to inspect and care for the place of work, the master is presumed to have had knowledge of the usage.

5. In an action for injuries sustained by an employé in a coal mine owing to the fall of slate from the roof of an entry, evidence that, according to custom, it was defendant's duty to make an inspection, was admissible, as bearing on the measure of care required of and exercised by the plaintiff, though not pleaded.

6. In an action by an employé in a coal mine for injuries received owing to the fall of slate from the roof of an entry, a question to a witness as to the probable length of time slate would drop after it became loose "under the conditions existing in the entry" was improper, the conditions referred to not having been disclosed.

7. The question was improper, inasmuch as it called upon the witness to usurp the function of the jury.

8. In an action by an employé in a coal mine for injuries sustained owing to a fall of slate from the roof of an entry, the complaint alleged that it was defendant's duty to examine and inspect the roof, but the only charge of negligence was in allowing the roof to become out of repair, and failure to prop and timber it as required by law. *Held*, that under the pleadings evidence that the slate would be liable to fall from three to six days after it became loose, unaccompanied by testimony as to when the defect was actually discovered by defendant, was insufficient to make out a case.

9. In an action by an employé in a coal mine for injuries sustained owing to the fall of slate from the roof of an entry, the court instructed that evidence had been introduced tending to prove a custom that a miner should look after the safety of the roof, but that the evidence should not be considered as tending to prove absence or want of negligence on the part of the defendant, and that the plaintiff had introduced evidence tending to show the custom of miners, which evidence should not be considered as showing absence of negligence on the part of plaintiff. *Held*, that the instruction was erroneous, since it deprived defendant of the benefit of its evidence as to custom, negatived the idea that if defendant owed no duty as to the roof it was not negligent, no matter what it omitted, and might have led the jury to believe that the evidence as to custom had no bearing on the issue as to negligence or contributory negligence.

10. The error was not cured by an instruction that, if the duty of inspection and repair devolved on plaintiff, he could not recover, and, if it devolved on defendant, plaintiff could not recover without showing some negligence, either of omission or commission.

11. Refusal of requested instructions embodied in the main charge is not error.

Appeal from District Court, Monroe County; T. M. Fee, Judge.

Action at law to recover damages for personal injuries received by plaintiff, resulting from a fall of slate from the roof of an entry in the defendant's coal mine. The defendant denied liability for the injuries, and on trial to a jury plaintiff received the verdict on which judgment was rendered, and the defendant appeals. Reversed.

Ryan, Ryan & Ryan and Clarkson & Bates, for appellant. N. E. Kendall, for appellee.

DEEMER, J. Plaintiff, while engaged with another in driving an entry in defendant's coal mine, received the injuries of which he complains through a fall of slate from the roof of said entry. He charges the defendant with negligence in the following language: "That it was the duty of the defendant to provide and erect in such entry suitable and necessary safeguards against accidents to those employed in and about said mine." "The said injuries were received by him wholly as the direct and proximate result of the carelessness and negligence of the defendant. That said carelessness and negligence consisted in allowing and permitting said cross entry K to become and remain in an unsafe and dangerous condition, and in failing and omitting to properly support the roof thereof with timbers or otherwise, as required by law, rendering it reasonably secure against a fall of slate." "That plaintiff had no knowledge whatever of the dangerous condition of said entry or the roof thereof, but he alleges that the defendant was well aware thereof, or, in the exercise of reasonable diligence, might have discovered the same." After the evidence was all adduced, the plaintiff amended his petition as follows: "(1) He alleged that on the 15th day of October, 1900, the defendant was in absolute and unqualified charge, control, and supervision of said cross entry K at the place where the plaintiff was injured, and that plaintiff had no charge, control, or supervision thereof whatever; that plaintiff's only duty in connection with said entry was at its face, more than 45 feet from the place of the injury; that no duty devolved upon him to inspect, examine, or secure the roof of said entry at the place where he was injured, but the duty so to examine, inspect, and secure said roof by timbers or other supports was incumbent upon the defendant; that plaintiff had a right to rely and did rely upon the defendant to inspect and examine said roof, and to timber support and secure the same in a proper and sufficient manner to prevent falls of slate therefrom." The entry

¶ 3. See Evidence, vol. 20, Cent. Dig. §§ 2151, 2255, 2325.

Digitized by Google

in which plaintiff was injured was a lateral one, running east and west at right angles to the main one, and had been extended something like 50 feet from the mouth thereof by plaintiff and one Williams at the time the accident occurred. It was intended to break through or reach a cross-section at a distance of something like 60 feet from the main entry, but this break-through had not yet been made. When plaintiff went to work, the entry had been extended something like 15 feet from its mouth by Williams alone. This entry ran east and west, and the bottom had been taken up and the sides cut along for a distance of 25 to 30 feet, to make room for the mules which were to operate the cars, and iron rails had been laid by employés of the company for cars to run upon for a distance of 8 to 10 feet from the mouth of the entry, when plaintiff received his injuries. Connected with these iron rails which had been laid by the company's employés were wooden ones, laid by plaintiff and his co-employé, for the purpose of removing the coal by cars from the face of the entry as they proceeded with their work. Plaintiff was injured on Monday, and on the Saturday before the company had its employés in the entry cutting along the ribs preparatory to taking up the bottom, and they had worked back into the entry for the distance of 35 feet. These employés had also put some timbers in the entry, and a driver was going in and out removing the coal. On the day of the injury plaintiff had gone to the mouth of the entry to get a coal car, which had been switched onto the iron track, and left there for the men who were at work at the face, in order that they might remove the coal therefrom. He went behind the car, gave it a push, and when he had arrived at a point variously estimated as from 6 to 10 feet from the entry mouth, was struck by a large piece of slate weighing 1,500 or more pounds, which fell from the roof of the entry. The entire piece which fell was within 15 feet of the mouth of the entry, and at a place where plaintiff had done no work. It was also over the iron rails which had been laid by the defendant company after the bottom of the entry had been taken up. All this plaintiff's evidence tended to show, and the jury was justified in finding these to be facts.

One of the close questions in the case was, of course, the defendant's duty to look after the safety of the place where plaintiff received his injuries. If plaintiff was making the place himself, and was solely responsible for its creation, condition, and care, then, of course, the rule as to the duty of the master to furnish his employé with a safe place in which to work does not apply. On the other hand, if defendant had assumed the care of the place, or was required to inspect and care for it, then it was liable if it failed to exercise ordinary care and diligence in looking after the safety of its employés, who were required to use the place in going about their work. The rules of law which apply to such cases are very well understood, and particularly well explained in Union Pac. R. Co. v. Jarvi, 53 Fed. 67, 3 C. C. A. 433; Kelly v. Fourth of July Mining Co. (Mont.) 41 Pac. 273. But the exact time when a master's duties begin is not fixed by any arbitrary rules. We have already held that evidence of custom and usage is material on this question, for such evidence does not vary either an established rule of law, or, in the absence of express stipulations, any definite contract relations between the parties. Taylor v. Star Coal Co., 110 Iowa, 40, 81 N. W. 249. Appellant's contention that such evidence relieves the employé of a statutory duty is unsound. It is a species of reasoning in a circle, which is at all times dangerous of adoption. If the employé was in control, then he was under a statutory duty to prop the roof and to properly timber the entry; but, if this was a duty devolving upon the defendant by reason of custom or otherwise, then the obligation rested on it, and not on its employé, who was without authority or control. This matter has already been decided against appellant in Corson v. Coal Co., 101 Iowa, 224, 70 N. W. 185, as well as in the Taylor Case, supra.

It is also argued that, as no custom was pleaded, evidence thereof was inadmissible. This is the rule where it is sought to modify or change the conditions of a contract, but it does not obtain in cases where duty grows entirely out of custom. Henry v. R. R. Co., 66 Iowa, 52, 23 N. W. 260. Eller v. Loomis, 106 Iowa, 276, 76 N. W. 686, relied upon by appellant, is not in point.

Further, it is said that it is incompetent for a witness to state a custom. Perhaps in some cases this may be true. But here, as in Milroy v. R. R. Co., 98 Iowa, 188, 67 N. W. 276, all parties treated the words "custom" and "usage" as synonymous, and it is everywhere held competent for a qualified witness to state the usage of a business when that becomes a material inquiry. When one shows himself competent to testify to a usage, his statement is not an opinion, but a fact, which is competent. If he gives a mere opinion, without any foundation in fact, he, of course, does not state a fact.

Again, it is said that there is no showing that defendant had notice or knowledge of the custom. This is not necessary. The custom or usage being shown by competent evidence, the defendant is presumed to have had knowledge thereof. This is fundamental.

What we have said disposes of all contentions with reference to testimony as to usage, save that, defendant contends it was not allowed to prove an entirely different custom from that relied upon by plaintiff. Some of the rulings on the questions propounded were erroneous, but defendant suffered no prejudice therefrom, as it was finally allowed to prove all it was entitled to.

Digitized by Google

2. Witnesses were allowed to state, over defendant's objections, the custom with regard to the examination and inspection of roofs of entries in mines. This is claimed to be erroneous, because irrelevant to any issues in the case. Referring back to the pleadings, it will be seen that this contention is entirely without merit. The petition explicitly charges that it was defendant's duty to do so. Without such allegation, the evidence was proper as bearing on the measure of care required of and exercised by the plaintiff.

3. Evidence was adduced tending to show that a piece of roof such as fell and injured plaintiff would likely hold four or five days after it first became loose. Such testimony from persons familiar with the mine, and who had frequently observed conditions, was undoubtedly admissible, under proper issues, to make out a case. Some of the questions propounded offended against the rule, in that, instead of calling for a general rule, plaintiff's counsel attempted to localize it, and to have the witnesses take into consideration facts and circumstances which were not proven, but rested in the minds of the witnesses, and were given such weight as the witness alone saw fit to impose. A sample question will suffice. These questions were propounded: "Q. Well, take such an entry as this was, and such a roof as it was, what do you say as to the probable length of time slate of that character of those dimensions usually drop to the bottom, after it becomes loose? (Defendant objects as incompetent, not the subject of expert testimony, and inadmissible for any purpose, and an attempt to put the witness into the jury box, calling for a conclusion, and purely speculative. Overruled, and defendant excepts.) A. That would depend upon the conditions of the air in the mine. Q. Suppose that there was no air course in the entry at all? (Same objection by defendant last above. Objected to. Overruled, and defendant excepts.) A. That is so, being no circulation would cause moisture, caused by sweating. Q. Take conditions as they were in that entry, of which you were familiar with all of them. (Defendant makes the same objection as to the last preceding question. Overruled, and defendant excepts.) A. Oh, a few days." What conditions were referred to is not disclosed. Moreover, the witness was asked to usurp the function of the jury, and to answer for them one of the vital questions in the case. Under no possible theory can such an interrogatory be sustained. Alvord v. Alvord, 109 Iowa, 113, 80 N. W. 306. Another point in connection with this evidence is that under the issues it was not sufficient to make out a case. Careful examination of the pleadings will disclose that, while plaintiff charged that it was defendant's duty to examine and inspect the roof of the mine, and proved that it was the custom of owners to take charge of and care for such roofs as the one in question, there is no allegation charging defendant with negligence in failing to make such inspection, or in failing to discover defects in the roof. The sole allegations of negligence are in allowing the roof to become out of repair, and in failure to prop and timber the roof as required by law. Plaintiff proved the fall of the slate, injury to his person, custom as to care of the entry, and likelihood of the roof to hang from three to six days after it became loose. Evidence as to how long a rock will hang may be competent as bearing on the question of failure to make repair, if there be other evidence regarding the time when the defect is actually discovered; but such evidence does not of itself furnish any solution of the question of negligence in failing to make repair. Had there been any charge of negligence in failing to make inspection, then the evidence, from those having experience in this kind of work, as to the time a rock will hang after it begins to detach itself from the roof, and as to the means of discovering the defect, would be both competent and relevant, for it would tend to prove the exact point in issue.

There is a manifest distinction between failure to repair and failure to inspect. The one may suggest the other, but this is not necessarily so. Negligence is only to be predicated upon failure to repair when there remains time after discovery to remedy the defect. Failure to inspect may be negligence although there remains no time for repair. Duty may, in such cases, demand other precautions than repair. As there was no allegation of negligence in failing to inspect, we do not think the evidence to which we have referred, unaccompanied by any testimony as to when the condition of the roof was actually discovered by the defendant, was sufficient to take the case to the jury on this proposition. This testimony simply suggests an inference from which other inferences may or may not be drawn. We shall assume that witnesses have testified that a piece of slate similar to that which fell on plaintiff will usually hang from three to six days after it becomes loose. From this we may assume that this particular piece of slate was loose for this length of time before it fell. Now, this is no proof that defendant knew of the defect, and it is practically conceded that it did not drive the entry itself. Without knowledge of the defect, no duty devolved upon plaintiff in the matter of making repairs. But it is said that from the evidence to which we have referred it should be inferred that defendant had knowledge of the defect. This it seems to us is pushing the doctrine of presumptions at least one step too far. As there is no direct allegation of failure to inspect, we must assume that defendant did its duty in that respect. The charge is failure to repair, and the proof is the fall of a roof which customarily holds for from three to six days after it begins to break loose. From this testimony we are asked to infer that not only this particular

Digitized by Google

piece of roof was loose for from three to six days, but that defendant knew it was loose, because it might have discovered it had it made proper inspection; that, having discovered it upon inspection, it failed to exercise proper care in the repair of the roof. Entirely too much is left to conjecture and inference in this syllogism. Wheelan v. C., M. & St. P. R. R. Co., 85 Iowa, 169, 52 N. W. 119; Asbach v. C., B. & Q. R. R. Co., 74 Iowa, 250, 37 N. W. 182; Bothwell v. R. R. Co., 59 Iowa, 194, 13 N. W. 78. A presumption can arise only from facts actually proven by direct evidence. A presumption is not a legitimate foundation for a presumption. If this were not true, there would be no limit to conjecture. Remembering that failure to inspect is not made a ground of negligence, we think there was not sufficient evidence to take the case to the jury on the issue of defendant's failure to repair. We are not to be understood as holding that the other allegations of negligence were not sustained by the evidence. Defendant, if in charge and control of the entry where plaintiff was injured, was under a statutory duty to securely prop and support the roof and entries under its control (Code, § 2491), and for failure to do so it may have been negligent. We have referred to the matter of evidence in order that the issues may be corrected on a retrial.

4. The court, in its twelfth instruction, said: "(12) The plaintiff has introduced evidence tending to prove the custom of mines in this district and in defendant's mine, and tending to show by that custom that the duty and responsibility of looking after the safety of the roof of such entries as entry K was on the 15th day of October, 1900. This evidence was introduced and admitted for that purpose, but must not be considered by you as showing and tending to show the absence of negligence on the part of the plaintiff contributing to the injury complained of. Evidence has been introduced by the defendant tending to prove the custom of the defendant's mine or in the defendant's mine, that the miner should or did look after the safety of the roof of such entries as entry K was on the 15th day of October, 1900, and that the evidence should not be considered by you as showing or tending to prove the absence or want of negligence on the part of defendant with regard to said roof." This is so clearly erroneous that little time need be given it. There can be no actionable negligence in the absence of a duty owing from him who is charged with the wrong. Unless the defendant owed plaintiff some duty, then, no matter what it did or did not do, it was not guilty of actionable negligence. From one point of view the instruction is correct. But from the other it is entirely incorrect and misleading. If it was not defendant's duty to look after the roof, but was the duty of the miner, then, no matter what defendant did or omitted to do, it was not negligent. This idea the instruction distinctly negatives, and it was, therefore, erroneous. Moreover, the instruction, fairly construed, deprived the defendant of the benefit of its evidence as to custom. Taking this instruction with others given in the case, it might perhaps be possible for a trained lawyer to sustain it by divorcing duty from negligent acts (which it is somewhat difficult to do, because the duty often furnishes the measure of care required); but when embodied in instructions given to a jury it is almost certain that the language will be misunderstood and misapplied. The instruction, on its face, is practically conceded to be bad, but it is claimed that it was cured by others. We do not think this is so. True, the court in another instruction said that, if the duty of inspection and repair devolved upon plaintiff, he could not recover, and that, if the duty devolved upon defendant, still plaintiff could not recover without showing some negligence either of omission or commission. But the trouble with the instruction as given is that the court told the jury that this evidence as to the custom should not be considered either as negativing defendant's negligence or as proving or tending to prove want or absence of negligence on the part of the plaintiff. We have already said that perhaps a trained mind might be able to harmonize these instructions, but to an ordinary layman they were certainly confusing and contradictory. Even lawyers sometimes forget that negligence is predicated upon duty, and that this duty, when discovered, furnishes the measure of care required. Following instruction 12 as given, the jury may well have believed that evidence as to custom had no bearing upon either the question of defendant's negligence or of plaintiff's contributory negligence, and, therefore, that, no matter if the evidence satisfied them that it was the custom of the miners to look after the roof where plaintiff was injured, still this had no bearing upon the ultimate question of negligence. We think the instruction should not have been given. The first paragraph of the instruction is not clear. It may have been misquoted; but as it stands it is unintelligible. The most that can be said of it is that a jury might well understand that, no matter what the evidence as to custom, it had no bearing on the question of plaintiff's contributory negligence. This is surely incorrect, and was manifestly prejudicial.

5. Complaint is made of an alleged failure of the court to instruct on the question of waiver and assumption of risk. The instructions asked by defendant with reference to those issues, in so far as they are correct, were embodied in the charge as given, and defendant has no cause for complaint. The rules on these subjects have been so recently considered that we need do no more in this connection than refer to Sankey v. R. R. Co. (Iowa) 91 N. W. 820.

Some other matters are argued, but as they are not deemed controlling, and are not

likely to arise on a retrial, we do not consider them.

For the errors pointed out, the judgment must be and it is reversed.

STATE v. CATHER.

(Supreme Court of Iowa. Oct. 6, 1903.)

ASSAULT WITH INTENT TO KILL—INTOXICATION — EVIDENCE — OPINION — CHARACTER —HARMLESS ERROR — INSTRUCTIONS — INCLUDED OFFENSES.

1. It was error to refuse to permit witness to state whether or not defendant was intoxicated at a certain time, without stating the facts on which he based his opinion; and he might also state his opinion as to what extent defendant was intoxicated.

2. Error in refusing the testimony was not harmless by permitting witness to describe defendant's appearance and demeanor at the time.

3. Where defendant, accused of assault with intent to kill, alleged self-defense, claiming that his antagonist was armed with a club, it was error to refuse evidence that shortly after the encounter a club was found at or near the scene.

4. It was error to refuse to permit a witness to state what defendant's character was prior to the assault complained of.

5. Alleged error in instructions for assault with intent to commit murder will not be considered where the verdict is for a lower degree of crime.

6. In a prosecution for assault with intent to commit murder, the court instructed that while drunkenness was no excuse, it might be considered for the purpose of determining whether defendant was capable of forming a willful, deliberate design to kill, and that though he made the assault in the manner charged, yet if he was so intoxicated as to be incapable of forming a design willfully and deliberately to do the act, it was not an assault with intent to commit murder. *Held*, that the instruction was erroneous for omitting reference to the included offenses, involving a specific intent.

Appeal from District Court, Marshall County; George W. Burnham, Judge.

Defendant was indicted for an assault with intent to commit murder, and was convicted of the crime of an assault with intent to commit manslaughter. From the judgment and sentence imposed, he appeals. Reversed.

J. L. Carney, for appellant. Charles W. Mullan, Atty. Gen., and Charles A. Van Vleck, Asst. Atty. Gen., for the State.

DEEMER, J. It is claimed that when the assault was committed, defendant was so drunk as to be incapable of forming an intent. His counsel offered witnesses to prove his condition in this respect, and we extract from the record the following, which presents the first question relied upon for a reversal: "Q. Was Cather noticeably intoxicated? (Objected to as incompetent, irrelevant, and immaterial, and asking for the opinion or conclusion of the witness.) Court. I suppose he can state his appearance, and what he did, and the jury must determine whether he was intoxicated, or something else. Defendant excepts. A. I should judge he was pretty drunk. (State moves to strike out the answer.) Court. Strike it out. Defendant excepts. Q. State what his condition was as you judged from his appearance? (Objected to for the same reasons.) Court. Sustained. The jury must determine that. Defendant excepts. A. I heard he and two other fellows quarreling as to what had become of the last bottle of whisky they had. Q. State whether or not he talked as a drunken or intoxicated person? (Objected to as asking for a conclusion of the witness, and calling for no fact.) Defendant's counsel. I think it is perfectly proper for the witness to state his condition. Court. No; it is for him to tell his appearance, and the jury must determine his condition. Defendant excepts. Q. From his talk, can you give us the way in which he talked? Did it indicate whether or not he was intoxicated? A. I think he was. (Objected to as incompetent, immaterial, irrelevant, and asking for an opinion. Sustained. Defendant excepts.) Q. How did he talk—as a sober or a drunken man? (Objected to for the same reasons. Sustained. Defendant excepts.) Q. State whether or not his language indicated he was under the influence of liquor? (Objected to for same reasons. Sustained. Defendant excepts.) Court. You each time ask for his conclusions. He can state what he did and said. Defendant excepts. Q. What would you judge from his appearance and talk as to his being under the influence of liquor? (Objected to as incompetent, etc. Sustained. Defendant excepts.) Q. Was he very intoxicated, or not? (Objected to, and objection sustained.) State how intoxicated he was? (Objected to and sustained.)" Many more questions of like import were propounded, and objections thereto were sustained. These rulings were manifestly erroneous. It is well settled that a witness may state whether or not another was intoxicated at a particular time, without narrating the facts on which he bases his opinion; and it is also permissible for a non-expert witness to state how far another was affected by intoxication. State v. Huxford, 47 Iowa, 16; Yahn v. City of Ottumwa, 60 Iowa, 433, 15 N. W. 257; State v. Wright, 112 Iowa, 443, 84 N. W. 541; Bailey v. City of Centerville, 108 Iowa, 23, 78 N. W. 831. While tacitly admitting error in these rulings, the Attorney General contends that the witnesses were permitted to give in evidence the defendant's appearance and demeanor, at all times material to the inquiry, and hence no prejudice resulted. This argument entirely overlooks the reason given for the admission of such evidence. The acts, conduct, and demeanor of a person under the influence of intoxicants cannot be accurately reproduced, and for this reason the question of intoxication is better determined from the direct answers of those who saw him, than

¶ 5. See Criminal Law, vol. 15, Cent. Dig. § 3161; Homicide, vol. 26, Cent. Dig. § 720.

Digitized by Google

from any description of his conduct. Rogers on Expert Ev. §§ 3, 4. The rulings were clearly erroneous, and the presumption of prejudice arising therefrom has not been overcome.

2. Defendant claimed that his antagonist was armed with a club, and that whatever he did was in defense of his person. He offered to show that shortly after the encounter a club was found at or near the scene of the conflict; but this the court would not permit him to do. We think the evidence should have been received.

3. Defendant also offered witnesses to prove that he had, prior to the assault, been a man of good character, peaceable and law abiding. A witness who stated that he knew the defendant's character was asked as to what it had been prior to the assault. Objection to the question was sustained; the court remarking: "I do not think there is a single issue in the case that would justify such evidence." Evidently, the learned trial judge overlooked the fact that evidence of good character of the defendant, with respect to the particular trait involved in the charge, is admissible in every criminal case. State v. Wolf, 112 Iowa, 464, 84 N. W. 536; State v. Northup, 48 Iowa, 583, 30 Am. Rep. 408, and cases cited. This may be proven by witnesses who knew his character as distinguished from his reputation, as well as by testimony of general reputation. This rule is so familiar that no citation of authorities is needed in its support. But see Dufresne v. Weise, 46 Wis. 290, 1 N. W. 59. Some other errors were committed in ruling on the admission of evidence which are not likely to be repeated on a retrial, and therefore we do not set them out.

4. The instructions with reference to an assault with intent to commit murder are criticised. As the verdict was for a lower degree of crime, we need not consider these complaints. The twenty-fourth instruction read as follows: "While it is a general rule of law that voluntary drunkenness is no excuse or justification for a crime perpetrated under its influence, still in cases of this kind drunkenness, if proved, may be considered by the jury for the purpose of determining whether the defendant at the time of the alleged offense was capable of forming a willful, deliberate design to take life. And in this case, although the jury may believe from the evidence beyond a reasonable doubt that the defendant made an assault with a dangerous weapon upon said James H. Ellis, in the manner and form as charged in the indictment, still, if you further believe from the evidence that just before and at the time defendant made such assault he was so deeply intoxicated by spirituous liquors as to be incapable of forming in his mind a design willfully and deliberately to do the act, then such an assault, under such a state of intoxication, would not amount to an assault with intent to commit murder." This was erroneous, in that it omitted a reference to the other included offenses, involving a specific intent. State v. Bell, 29 Iowa, 318; State v. Pasnau (Iowa) 92 N. W. 683.

Some other questions are argued, which we do not consider, as the matters are not likely to arise again.

For the errors pointed out, the judgment must be reversed, and the cause remanded for a retrial. Reversed.

STATE v. SCROGGS.

(Supreme Court of Iowa. Oct. 7, 1903.)

RAPE—AGE OF CONSENT—EVIDENCE—INSTRUCTIONS.

1. Inasmuch as Code, § 4756, imposes the same punishment for rape by force as where the crime is predicated on the fact that prosecutrix is under the age of consent, where an indictment alleged the female to have been under the age of consent, allegations as to the exercise of force might be treated as surplusage.

2. On a prosecution for rape on one under the age of consent, a certificate of baptism of the prosecutrix, which included a statement as to the date of her birth, was received in evidence over defendant's objection; but the ruling was changed the next day, and the jury cautioned not to give it any consideration. The date corresponded with that testified to by prosecutrix, and no other evidence as to her age was introduced. *Held* not prejudicial error.

3. On a prosecution for assault with intent to rape, prosecutrix on cross-examination testified to having had intercourse several times before the crime with a third person, and on redirect examination was allowed, over objection, to state that after such intercourse, and before the assault, she had noticed such third person and defendant in each other's company considerable. *Held* that, as evidence of the intercourse was elicited to cast doubt on the female's veracity, the showing of the intimacy on redirect examination was not prejudicial.

4. On a prosecution for statutory rape, the court charged that the state would not be required to show the female's age by a family record or any instrument in writing, but that proof might be made by oral testimony of prosecutrix, and that her testimony might be based on information from her parents. *Held*, that the court's statement as to dispensing with family records did not "belittle" the quantum of proof.

5. On a prosecution for statutory rape, the female is a competent witness as to her age.

6. On a prosecution for statutory rape, an instruction that the female's testimony as to her age might be based on information from her parents was not erroneous, because the character of the information, whether oral or in writing, or when given, was not mentioned in the instruction.

7. On a prosecution for statutory rape, testimony of the female as to her age is not incompetent because of the fact that her father was present in the courtroom, and could have testified to her age.

8. On a prosecution for statutory rape, an instruction that the female was competent to testify as to her age did not indicate to the jury that her appearance and apparent maturity might not be considered on such question.

9. On a prosecution for statutory rape, the jury were advised that if prosecutrix at the time of the alleged crime was under 15 years they were not to consider whether she consented

¶ 5. See Criminal Law, vol. 14, Cent. D

Digitized by Google

or whether defendant had knowledge of her age. *Held*, that inasmuch as the female weighed 145 pounds, and appeared as if past majority, the instruction was proper.

Appeal from District Court, Shelby County; W. W. Macy, Judge.

The defendant was convicted of assault with intent to commit rape, and appeals. Affirmed.

Byers & Lockwood, for appellant. Chas. W. Mullan, Atty. Gen., and Chas. A. Van Vleck, Asst. Atty. Gen., for the State.

LADD, J. The case was tried on the theory that the defendant was accused of an assault with intent to rape a female under 15 years of age. This appellant insists was error, for the reason that the indictment charged the assault to have been committed with force and against the will of prosecutrix. Counsel seems to rely upon decisions to the effect that under an ordinary indictment for rape, or assault with intent to commit rape, in which the age of prosecutrix is not mentioned, conviction cannot be had without proof of force and the absence of consent, even though it appear in the course of the trial that she be under the age of consent. See State v. Johnson, 100 N. C. 494, 6 S. E. 61; Vasser v. State, 55 Ala. 264; Bonner v. State, 65 Miss. 293, 3 South. 663; State v. Haddon (S. C.) 27 S. E. 198; Moore v. State, 20 Tex. App. 275; Nicholas v. State (Tex. App.) 5 S. W. 239; Jenkins v. State (Tex. Cr. App.) 29 S. W. 1078. The ground of these decisions is that there is a variance between the allegations and the proof. But separate provisions for offenses against a child and one over the age of consent are prescribed by the statutes of the states in which these rulings were made, and hence the necessity of distinct averments with respect thereto. In this state the offenses are defined in the same section of the statute, and the punishment is the same. Section 4756 of the Code. In these circumstances, according to several authorities, the indictment may charge in separate counts carnal knowledge of a female under the age of consent and of such knowledge by force and against her will. Grimes v. State, 105 Ala. 86, 17 South. 184; State v. Dalton, 106 Mo. 463, 17 S. W. 700; 17 Ency. P. & P. 661. Where this is not done, however, and the female is alleged to be under the age at which consent may be given, it is uniformly held that statements of the exercise of force against her will, found in the indictment, are mere matters of aggravation, and to be treated as surplusage. McComas v. State, 11 Mo. 117; State v. Horne, 20 Or. 485, 26 Pac. 665; Davis v. State, 42 Tex. 226; State v. Erickson, 45 Wis. 87.

2. A certificate of the baptism of prosecutrix on June 11, 1893, which included a statement that she was born January 7, 1887, was received in evidence over the defendant's objection, but the ruling was changed the following morning, and the jury cautioned explicitly not to give it any consideration. The date corresponded with that testified to by her, and no other evidence of age was introduced. Conceding the evidence to have been erroneously received, we think, in view of its prompt withdrawal and the caution given to the jury to disregard it, the error was without prejudice. State v. Helm, 97 Iowa, 382, 66 N. W. 751.

3. On cross-examination prosecutrix testified to having had intercourse several times previous with a physician of the village, and on redirect was allowed, over objection, to state that after such intercourse, and before the alleged assault, she had noticed said physician and defendant much in each other's company. Manifestly this alleged fact of such intercourse was elicited to throw doubt on prosecutrix's veracity, and it cannot be said to have been prejudicial to defendant in the circumstances disclosed to permit a showing of such intimacy.

4. The court in the sixth paragraph of the charge instructed the jury that "the state would not be required to show the age of said Emma Meyer by a family record or any instrument in writing; such proof may be made by oral testimony of witnesses, and said Emma Meyer is a competent witness as to her age, and such testimony may be based upon information with respect thereto, if any she may have, from her parents." It is said that while the first clause is correct in law it ought not to have been given, as no one claimed it to be necessary to prove the age of prosecutrix by other than oral testimony. As family records are commonly kept it was entirely proper for the court to indicate that they might be dispensed with in proving age and other evidence received to establish that fact. In doing so the quantum of proof was not belittled, as contended.

Exception is also taken to the statement to the effect that prosecutrix was a competent witness of her own age. Such has long been the law. Says Greenleaf on his work on Evidence: "In strictness, a person's belief as to his own age rests upon hearsay only, not on actual observation and recollection. Nevertheless such belief, sufficient as it is for action in practical affairs of life, ought also to be admissible in judicial inquiries, and such is the conclusion generally accepted." The court in People v. Ratz, 115 Cal. 132, 46 Pac. 915, thus summarizes the law on the subject: "A person's age may be proven by his own testimony, and the fact that knowledge of that age is derived from statements of parents or from family reputation does not render it inadmissible." Com. v. Stevenson, 142 Mass. 468, 8 N. E. 341; Houlton v. Manteuffel, 51 Minn. 187, 53 N. W. 541; State v. Bowser, 21 Mont. 133, 53 Pac. 179; Dodge v. State (Wis.) 75 N. W. 954; State v. Marshall, 137 Mo. 463, 36 S. W. 619, 39 S. W. 63; State v. McClain, 49 Kan. 734, 31 Pac. 790.

The last case is precisely in point, as the prosecutrix there testified to her age, and on

Digitized by Google

cross-examination that she knew because her father had told her. The evidence was declared sufficient to support a conviction. Appellant claims the character of the information, whether oral or in writing, or when given, was not mentioned in the instruction. Every one is presumed to know his own age, and the source of information is a matter of inquiry on cross-examination. But appellant urges her evidence was not the best attainable, for the reason her father was present in court, and presumably knew as a fact what she had ascertained only on report. The evidence of the child may not be as satisfactory as that of the father or mother or some other person present at her birth, but it should be received, and accorded such weight as it is entitled to under all the circumstances. State v. Cain, 9 W. Va. 559; Bain v. State, 61 Ala. 75. It may be that, in connection with her evidence, her appearance and apparent maturity might aid the jury in determining the age to which she had attained; if so, mentioning her competency to testify did not, as contended, indicate that these matters ought not to be considered. See Com. v. Phillips, 162 Mass. 504, 39 N. E. 109; Stephenson v. State, 28 Ind. 272.

5. In the seventh and tenth instructions the jury were advised that if prosecutrix at the time of the alleged assault was under 15 years of age they were not to consider whether she consented or whether defendant had knowledge of her age. Error is alleged, in that no such issues were raised. But elsewhere in the brief counsel insist that prosecutrix weighed 145 pounds, and appeared like a person past her majority. If so, the question of knowledge would be very likely to arise in the jury's deliberations, and for this reason both subjects were proper matters for instruction, regardless of defendant's contentions at the trial. The seventeenth instruction is without defect, and the evidence convincing of defendant's guilt. Affirmed.

CASLEY v. MITCHELL.

(Supreme Court of Iowa. Oct. 6, 1903.)

DOWER — MARRIAGE — EVIDENCE — SUFFICIENCY—COMPETENCY—PARISH REGISTER—DIVORCE—PRESUMPTIONS—ALIENS — RESIDENCE—WITNESS FEES—MILEAGE—DEPOSITIONS—MOTION TO SUPPRESS.

1. Record evidence of marriage is not necessary, but it may be proved by any kind of evidence, whether direct or circumstantial.

2. Testimony of a witness who had married plaintiff's sister, that he was at plaintiff's father's home when plaintiff and her alleged husband returned from their marriage at the church, and that they immediately afterwards began living together, and had children, was sufficient to establish the marriage.

3. The register of a parish in England, being a record of marriages, baptisms, and burials, required by law, is competent evidence of a marriage recorded therein by the vicar in the usual course of business.

4. Plaintiff was married in England in 1863, and about four years afterwards her husband abandoned her, going to a foreign country, where he assumed another name, under which he again married in 1873. Afterwards he removed with his second wife to the United States, and continued to live with her, acquiring and holding property under his assumed name. Plaintiff had no knowledge of his second marriage. *Held*, in an action for dower, that there was no presumption that he had obtained a divorce from plaintiff.

5. Any presumption that a husband who left his wife, and afterwards married another, had obtained a divorce from the first wife, was overcome by evidence that he abandoned his first wife without cause, and afterwards was married, living under an assumed name.

6. Where, in an action for dower in lands conveyed by the husband alone, it appeared that the deceased husband, though of foreign birth, was a resident of the state, and there was no evidence that he was an alien, the conveyance was not free from the widow's dower right, under McClain's Code 1888, § 3646, giving the widow of a nonresident alien the same right in the property of her husband as a resident, except as against a purchaser from decedent, even if said section applied to land conveyed by resident aliens.

7. Mileage for witnesses necessary to make out plaintiff's case was properly taxable as costs, whether they came from within or without the state.

8. Under McClain's Code, § 4712, expressly providing that if depositions are filed during term, exceptions other than for incompetency must be filed by noon of the third day after such filing, a motion to suppress depositions 10 days after the depositions were filed was properly overruled.

Appeal from District Court, Calhoun County; S. M. Elwood, Judge.

The plaintiff alleges that she is a resident of St. Just, in the county of Cornwall, England, and that she was there married to John Casley in February, 1863; that some years after said marriage her husband deserted her without cause, and removed to the United States, where he assumed the name of John Wallace; that under such assumed name he acquired the title to, and became the owner of, certain real estate in Calhoun county, Iowa, which he afterwards conveyed to the defendant's grantor; that since such conveyance the said John Casley, alias John Wallace, has died, and that she is his widow, and entitled to one-third in fee simple of the real estate of which he was seised during his life, and that she has made no relinquishment or conveyance of such interest; that the defendant holds the title to said land through a deed from her husband, as aforesaid. Plaintiff prays that her title be established, in accordance with the facts pleaded. There was a trial to the court, and a decree for the plaintiff, from which the defendant appeals. Affirmed.

O. J. Jolley and E. C. Stevenson, for appellant. W. E. Gray and M. W. Frick, for appellee.

SHERWIN, J. The first question for determination, in the logical order of events, is whether the record shows by competent evidence the marriage of the plaintiff to John

¶ 1. See Evidence, vol. 20, Cent. Dig. § 505; Marriage, vol. 34, Cent. Dig. § 70.

Digitized by Google

Casley, as alleged by her. We are abidingly convinced that it does. Record evidence of marriage is not necessary, and it may be proved by any kind of evidence, whether direct or circumstantial. State v. Williams, 20 Iowa, 98; State v. Wilson, 22 Iowa, 364; 19 Am. and Eng. Ency. Law (2d Ed.) 1197, and cases there cited; Greenleaf on Evidence (13th Ed.) § 461. The testimony of the witness Nicholas, who married the plaintiff's sister, and who was at her father's home when she and Casley returned from their marriage at the parish church, shows that they immediately afterwards commenced living together, and so continued for several years, and that three or four children were born to them, is alone sufficient to establish the marriage. The parish register of St. Just is also competent evidence of the marriage. It is a record of marriages, baptisms, and burials, required by the law of England, and the entry therein was made by the then vicar in the usual course of business. Greenleaf on Evidence, supra; Abbott's Trial Evidence, §§ 43, 44; 19 Am. and Eng. Ency. Law, 1202; Blackburn v. Crawford, 3 Wall. 175, 18 L. Ed. 186. That the John Casley who was married to the plaintiff in 1863 is the identical person who became the owner of the property in question under the assumed name of John Wallace does not admit of doubt, and, indeed, is not seriously questioned. Some four years after his marriage to the plaintiff, John Casley left his wife and St. Just, for the purpose of seeking employment elsewhere. For some three months thereafter the plaintiff received letters and remittances from him, but thereafter heard nothing from him, and for many years did not know of his whereabouts. John Casley went to Germany after he had abandoned the plaintiff, and there he assumed the name of John Wallace, and was married under that name in 1873. After his second marriage, he removed to the northern part of England, where he and his new wife, Elizabeth Wallace, lived eight or ten months, and from there they came to the United States, locating first in Pennsylvania. In 1875 Casley came to Iowa, and the year after his second wife joined him here. In 1877 they removed to Colorado, where they resided about a year, and from there they came back to Iowa, where they lived together as husband and wife until the death of Casley in December, 1898. During all of this time he went under the assumed name of John Wallace, and acquired and held property in that name. There is no evidence in the record tending to show that he at any time or place procured a divorce from the plaintiff. She did not procure one from him, nor did she have any notice or knowledge that he had procured, or attempted to procure, a divorce from her. Neither did the plaintiff have knowledge that Casley had again married. No presumption that Casley obtained a divorce from the plaintiff before or after his marriage in Germany can be indulged, and the case of Blanchard v. Lambert, 43 Iowa, 228, 22 Am. Rep. 245, and later cases based upon facts similar thereto, are not controlling here. In the Blanchard Case, Mrs. Blanchard had been married to one Musgrave before her marriage to Blanchard. She and Musgrave separated in 1858, and both thereafter lived for some time in the same community, Musgrave living a part of the time with another woman as his wife, to whom report said he was married, and all of which was known to his former wife, Mrs. Blanchard. In Re Edwards, 58 Iowa, 431, 10 N. W. 793, the petitioner, who was claiming to be the widow of the deceased, had remarried after her separation from him, and there was also record evidence of a divorce, and his own admission that she and Edwards had been divorced. The presumption indulged in that case was against a criminal act on the part of the petitioner. In Leach v. Hall, 95 Iowa, 611, 64 N. W. 790, the facts were materially different from the facts in this case. There the plaintiff knew of, and distinctly recognized, the second marriage. This case is clearly within the rule announced in Ellis v. Ellis, 58 Iowa, 720, 13 N. W. 65, where it is said: "There must be something based on the acts and conduct of both parties inconsistent with the continuance of the marriage relation before the presumption should be indulged." The Ellis Case was followed in Gilman v. Sheets, 78 Iowa, 499, 43 N. W. 299, and in Barnes v. Barnes, 90 Iowa, 282, 57 N. W. 851. In Goodwin v. Goodwin, 113 Iowa, 319, 85 N. W. 31, we held that a presumption of divorce could not alone overthrow the presumption of the continuing validity of the first marriage in a case involving property rights. See, also, Dunn v. Portsmouth Savings Bank, 103 Iowa, 538, 72 N. W. 687. No presumption that a divorce was obtained by Casley should obtain in this case. But, even if such a presumption might reasonably be indulged, it would be fully overcome by the fact that he deserted his former wife without any cause whatever, and that he thereafter married, and lived far from her, under a false name. The deceased was a resident of this state, and there is no evidence tending to show that he was an alien; hence section 3646, McClain's Code 1888, in force at the time the land in controversy was conveyed by him, could not be controlling if enlarged to include land conveyed by a resident alien. One of the plaintiff's witnesses came to Iowa from Michigan, and another from Colorado. Their personal presence was necessary for the proper identification of John Wallace, and their mileage was taxed to the defendant. This was right (Briggs v. M. Rumely Co., 96 Iowa, 202, 64 N. W. 784; Duree v. C., M. & St. P. Ry. Co. [Iowa] 92 N. W. 890); and if the presence of the witnesses was properly required, as in this case, it can make no difference whether he comes from within or without the state.

Digitized by Google

Depositions were filed in the case during a term of court, and 10 days thereafter a motion to suppress them was filed. The motion was properly overruled, because not filed in time. McClain's Code, § 4712.

The judgment is affirmed.

CITIZENS' NATIONAL BANK v. WILSON et al.

(Supreme Court of Iowa. Oct. 9, 1903.)

NOTES—ACTION AGAINST SURETY—PAYMENT—EVIDENCE—ENTRIES IN BANKBOOKS.

1. In an action on a note against a surety, where the defense was that a new note had been accepted extending the time of payment, entries in the books of the bank tending to show that the note in question was regarded as paid when the new notes were issued were competent, relevant, and material.

2. In an action on a note against a surety, where the defense was that a new note had been accepted extending the time of payment, defendant called the officers of a bank as witnesses to identify the books of the bank, in which entries were found tending to show the note in controversy was regarded as paid on the execution of the new note; but the officers of the bank testified that the note was never surrendered, and that when the entries were made it was understood that its payment was conditional on the procurement of the signature of defendant as a surety on the new note. *Held*, that defendant was not bound by the explanation given, but the entries were independent evidence.

Appeal from District Court, Marion County; J. D. Gamble, Judge.

Action on promissory note. McCoy defended on the ground that he was surety only, and that he had been discharged by acceptance of a new note, extending the time of payment without his consent. From judgment on a directed verdict against all the defendants, McCoy alone appeals. Reversed.

Hays & Amos, for appellant. Crozier & McCormack and S. C. Johnston, for appellee.

McCLAIN, J. The execution of the note in suit was admitted, and the burden of proving payment or discharge was assumed by defendant McCoy. Thereupon evidence was offered in his behalf tending to show that about seven months after the maturity of the note, which was for $1,000, the plaintiff, holding at the same time another note (which may be referred to as the "Carruthers note") for $200, on which the Wilsons were liable, received from the Wilsons $240, and had them execute two notes for $800 and $200, respectively, payable on demand; that on the note register of the bank an entry was made by its officers indicating that the note in controversy and the Carruthers note were paid on the date of the execution of the two new notes; that the new notes were entered on said register as paper held by plaintiff in the usual course of business; that other loans were made by the bank to the Wilsons; that thereafter one of the Wilsons inquired of the cashier of plaintiff bank if the note which is now in suit was settled, and was told by him that it was; that about six months after the two notes for $800 and $200, respectively, above referred to, were executed, plaintiff bank gave to the Wilsons a statement of notes held by the bank against them, with request for their renewal, and that in this statement were included a note for $800 and a note for $200, apparently the notes already above described, but no note corresponding to that in suit; that thereupon a small amount of cash was paid by way of interest, and two new notes were executed by the Wilsons, one of them being for $1,000, whereupon notes held by the bank against the Wilsons were surrendered, including the notes for $800 and $200, respectively, above referred to, but not including the note in suit; that some time after the commencement of the present suit this last-mentioned note for $1,000 was surrendered to the Wilsons, and the note in suit was entered on the note register of the bank under a new number as a note held by it and remaining unpaid. It is difficult to determine from the record whether entries in the books of the bank, tending to show some of the facts above recited, were admitted or excluded. But such entries were certainly competent, relevant, and material, and objection to their admission was not well taken. If such entries were excluded, their exclusion was error, which was duly excepted to. If received, they tended to show, by the admissions of the bank's own qualified officers, by whom the entries were proven to have been made, that the note in suit was discharged. As against the effect of these entries, the court had the testimony of the officers of the bank, called by defendants as witnesses to prove the entries and describe the transactions with reference to which they were made, that the note in suit was never surrendered; that when the entry of payment was made on the note register opposite the number and description of such note and the two notes of $800 and $200, respectively, executed by the Wilsons, were received by the bank, and entered on its note register, there was an understanding with the Wilsons that the acceptance of these two notes and $240 in cash as payment of the note in suit and the Carruthers note, with interest accrued on each, was conditioned on the procurement of the signature of McCoy as surety on each of the new notes; that the $800 note was pinned to the note now in suit; and that it was not inconsistent with the custom of the bank's officers in transacting its business at that time to enter a record of payment of a note when another note was taken in renewal, even though the new note had not been fully executed, and the old note had not, therefore, been finally satisfied. On the evidence introduced, if submitted to the jury,

Digitized by Google

a finding would, perhaps, have been proper that the final discharge of the note in suit and McCoy's liability as surety thereon was contingent for six months on his signing the two notes of $800 and $200, respectively, and for an additional time on his signing the note of $1,000, executed by the Wilsons when these two notes were surrendered to them. But certainly such a finding would not have been the only one which the evidence would justify. In this connection it is proper to say that McCoy was never advised by the officers of the bank that it was desired or expected that he sign any new notes. So far as the record shows, the alleged understanding between the bank and the Wilsons as to obtaining McCoy's signature was not indicated to McCoy by any one, and he remained entirely ignorant of it until long after this suit was brought. The direction of the court in favor of plaintiff must have been predicated on the thought that the defendants were bound by the explanation of these transactions and entries, given by the bank's officers called as witnesses for the defense. But this cannot be true. The officers were necessary witnesses to identify the books in which the entries were found. With proper identification, the entries became independent evidence. It was for the jury to weigh this evidence and the evidence as to the declarations of the cashier to one of the Wilsons that the note in controversy had been settled, and, in the light of the explanation of the officers given, to determine the truth of the matter. Auburn City National Bank v. Hunsicker, 72 N. Y. 252; German Savings Bank v. Bates Addition Improvement Company, 111 Iowa, 432, 82 N. W. 1005; Oxford State Bank v. Holscher, 115 Iowa, 196, 88 N. W. 360. It is to be borne in mind that the question before the trial court, so far as defendant McCoy was concerned, was not whether the Wilsons owed the bank $1,000, but whether a certain specific note on which McCoy was surety had been satisfied, and his liability thereon discharged.

The trial court should not have directed a verdict for plaintiff, and the judgment as against McCoy is reversed.

THORNILY v. PRENTICE.

(Supreme Court of Iowa. Oct. 6, 1903.)

JUDGMENT — COLLATERAL ATTACK — VOID JUDGMENT—PROCESS—CONSTRUCTIVE SERVICE—NAME OF DEFENDANT—IDEM SONANS.

1. A judgment rendered by a court without jurisdiction is void, and may be attacked in any proceeding, direct or collateral.

2. In mortgage foreclosure a copy of the notice was left with a son of defendant, but the sheriff's return contained no allegation that the copy was left with a member of defendant's family, or at his usual place of residence, or that he was not to be found in the county of his residence. *Held*, that there was no service, and the court obtained no jurisdiction.

3. Service of notice, in mortgage foreclosure, on a trustee who held the legal title, did not give the trustee authority to appear for the cestui que trust, so as to authorize any personal judgment against him.

4. In a suit to foreclose a mortgage the service of notice on the defendant was constructive. The defendant was Willis H. T.; the judgment rendered was against "William M. T.," and defendant's name in the notice had been given as "W. M. T." *Held*, that the rule of idem sonans was not applicable, and the adjudication was of no validity.

5. Where, in a suit to foreclose, the mortgagee claimed that the cestui que trust in a trust deed of the land given by the owner had agreed, as part consideration for the trust, to pay the mortgage indebtedness, the burden of proving such fact was on the mortgagee.

Appeal from District Court, Van Buren County; C. W. Vermillion, Judge.

Action in equity to quiet plaintiff's title in a tract of land in Van Buren County. Decree for plaintiff, and defendant appeals. Affirmed.

Mitchell, Sloan & McBeth, J. H. Anderson, and J. W. Williams, for appellant. Wherry & Walker, for appellee.

WEAVER, J. The question at issue under the pleadings turns upon the validity or invalidity of a judgment entered by the district court of Van Buren county, which judgment defendant alleges to be a lien upon the land described in the petition. The circumstances material to be stated are as follows: In the year 1887 one J. W. Scott was the owner of a grist mill, in which he desired to place new and improved machinery. To aid him in this enterprise, plaintiff, with other neighbors, signed Scott's promissory notes for a considerable sum, and in the name of a trustee took a mortgage on the mill property to secure themselves from loss thereon. In 1892 Scott found himself unable to pay the notes, and at the request of his sureties made a deed of the mill to a trustee for their benefit. The conveyance was made by an ordinary warranty deed, but excepted from its covenants the lien of a first mortgage for $1,600 held by Luke P. Prentice, the defendant herein. On March 12, 1892, the plaintiff, having rented his farm to his son, removed to Ohio, where he has ever since resided. On September 14, 1893, Prentice began an action to foreclose his mortgage, naming among the defendants the trustee, Edmundson, who held the legal title to the property; also "W. M. Thornily" and others, who were supposed to be the persons for whose benefit the deed was taken. In such foreclosure petition it was alleged that as a part of the consideration upon which Scott made said deed said "W. H. Thornily" and the others for whose benefit the deed was made promised and undertook to pay the mortgage debt to Prentice. Proof of service of original notice as to Thornily was made by sheriff's return as follows: "This notice came into my hands for service, Sept. 15, 1893, and I certify that on

¶ 1. See Judgment, vol. 30, Cent. Dig. § 924.

Digitized by Google

the 25th day of Sept., 1893, I personally served the same on the foregoing defendants as follows: On W. M. Thornily by leaving a copy of notice with Paul Thornily, over 15 years of age, his son. All done in Van Buren county, Iowa, the 26th day of Sept., 1893. James Elerick, Sheriff." Edmundson, trustee, appeared to said action, and filed an answer "for himself and for the other defendants" except Scott and wife. Scott filed a cross-petition against his codefendants, alleging their promise to pay the debt to Prentice. Edmundson, trustee, again assumed to answer this pleading both for himself and for his codefendants; but upon the trial, and before judgment was entered, Edmundson and the other resident defendants, together with their attorneys of record, filed a written disclaimer of any right or authority to represent Thornily. Notwithstanding this disclaimer, the court proceeded to render personal judgment against "Wm. M. Thornily" and J. W. Scott for $1,813.66 and costs. On special execution the mortgaged property was sold to Prentice for $1,600, leaving the remainder of said judgment and costs still unpaid.

1. Appellee raises the question that the evidence has never been certified by the trial court. It is to be admitted that the abstract fails to make it clear whether such certification was within the statutory time, or, indeed, at any time; but, in view of the conclusion we have reached upon the merits we have not gone to the transcript to determine the question thus raised. Moreover, there is no such denial by appellee as is required to put the sufficiency or completeness of the record in issue.

2. Appellant's first proposition is that the validity of the judgment cannot be questioned in a collateral proceeding. Assuming for the purposes of argument that this action is a collateral attack upon the judgment, we have to say that this court is fully committed to the doctrine that a judgment without jurisdiction is not merely voidable, but absolutely void, and may be denied or contested in any proceeding, direct or collateral, in which a party seeks to assert a right under such pretended adjudication. In other words, a void judgment is not judgment, and its record does not estop the defendant therein from denying its binding force or effect whenever and wherever it may be asserted against him. Kitsmiller v. Kitchen, 24 Iowa, 163; Lyon v. Vanatta, 35 Iowa, 521; Jordan v. Brown, 71 Iowa, 421, 32 N. W. 450; Hubner v. Reickhoff, 103 Iowa, 368, 72 N. W. 540, 64 Am. St. Rep. 191; McAllister v. Johnson, 108 Iowa, 42, 78 N. W. 790. This rule does not apply where service of notice is merely informal or defective, for in such case the court has jurisdiction to pass upon its sufficiency, and relief from a judgment rendered thereon must be sought by appeal or direct attack. Cooper v. Sunderland, 3 Iowa, 114, 66 Am. Dec. 52; Boker v. Chapline, 12 Iowa, 204; Shawhan v. Loffer, 24 Iowa, 217; Rotch v. College, 89 Iowa, 480, 56 N. W. 658; Day v. Goodwin, 104 Iowa, 374, 73 N. W. 864, 65 Am. St. Rep. 465. None of the cases upon which appellant relies goes further than the proposition last stated. If there was no service of original notice upon the appellee, and no authorized appearance in his behalf in the appellant's foreclosure proceedings, he may, in this action, rightfully deny the validity of the judgment there rendered against him, and contest the alleged judgment lien against his land. That there was in fact no service of notice subjecting his person to the jurisdiction of the court is made very clear. Appellee had for more than a year been, and has ever since remained, a resident of Ohio. The sheriff's return makes no pretense of personal service, nor even of substituted service. Its statement that a copy was left with the son, unsupported by any allegation that it was left with a member of his family, or at his usual place of residence, or that he was not to be found in the county of his residence, does not show even a defective or informal service, but no service, and gave the court no jurisdiction over him. So, also, as to the appearance made in his behalf. The service of notice upon the trustee, who held the legal title to the mortgaged property, was perhaps sufficient to authorize this court to enter a decree of foreclosure which would bind the appellee herein as a cestui que trust, but the trustee as such had no authority to appear for appellee as to any personal demand against him, or subject him to the hazard of a personal judgment in appellant's favor. No attempt is made to show such authority, and both trustee and counsel entered an express disclaimer of right to speak or act for the appellee before the judgment was entered. Upon such a state of facts the court below had no other alternative than to hold the judgment void.

3. The discussion in the preceding paragraph has been upon the assumption that the judgment in controversy is a judgment against appellee. It is apparent, however, that such is not the case. The appellee's name is Willis H. Thornily. The so-called "service of notice" was made, according to the sheriff's return, by leaving a copy with Paul Thornily for "W. M. Thornily." The judgment is entered against "Wm. M. Thornily." Now, it may be conceded for the purposes of this case that, if this notice had been personally served upon appellee, or if he actually appeared in response to such service, a confusion or mistake in the name by which he was designated would not necessarily be fatal to the judgment, and that in the present proceeding his identity with the person sued could be established by parol evidence; but where reliance is had upon the constructive notice given by publication or by substituted service—a notice which the party to be charged may never in fact see or hear of—greater strictness must be observed. Fanning v. Krapfl, 61 Iowa, 417, 14

Digitized by Google

N. W. 727, 16 N. W. 293. A judgment rendered upon such service will bind no one not properly named in the record. This does not mean that the name must be correctly spelled, but it must be so nearly correct as to come within the rule of idem sonans. That is, if the name as spelled or written in the record, when pronounced according to commonly accepted methods, conveys to the ear a sound practically identical with the sound of the correct name as commonly pronounced, the designation is sufficient, and no advantage can be taken of the clerical error. 21 Am & Eng. Ency. (2d Ed.) 313. Where, however, the record of a judgment entered upon a notice of this kind presents not a mere discrepancy or variation in the spelling of a defendant's name, but the use of a name other and different than that borne by the person against whom such judgment is sought to be enforced, the rule of idem sonans is not applicable, and the adjudication is of no validity against such person. In the Fanning Case, above cited, we held that a decree entered upon publication of notice directed to "P. F. B. Hopkins" gave the court no jurisdiction over "F. P. B. Hopkins." In the case before us appellant attempts to assert against Wislis H. Thornily a judgment which he has obtained against William M. Thornily on a substituted service supposed to have been made on W. M. Thornily. That "Willis H." is not identical in sound or in fact with "William M." or "W. M." hardly requires argument or illustration, but a few instances in which the rule has been applied may not be out of place. "Helen" and "Ellen" are distinct names. Thomas v. Desney, 57 Iowa, 61, 10 N. W. 315. So, also, "Furman" and "Freeman" (Howe v. Thayer, 49 Iowa, 154); "Henry" and "Harry" (Garrison v. People, 21 Ill. 535); "May" and "Mary" (Kennedy v. Merriam, 70 Ill. 228); "McCarver" and McCravey" (McCravey v. Cox, 24 Ark. 574); "Griffin" and "Griffith" (Henderson v. Cargill, 31 Miss. 367); "Matthew" and "Mather" (Robson v. Thomas, 55 Mo. 581). Nor is this a mere technicality. When the rights of a person are to be concluded by a notice which is merely constructive, not actual, it is right and just that the party who wishes to avail himself of its benefits be held to follow the forms provided by statute. Adams, J., in Fanning v. Krapfl, supra, speaking of notice by publication, says: "Notice by publication, even where there is no misnomer, does not afford a very strong natural presumption that the fact of the pending of the action will be brought to the defendant's actual knowledge. Notice by this mode is allowable only out of necessity. It must often happen that great injustice is done and great hardship suffered. We are not disposed to open the door any wider than necessity requires. Whoever undertakes to give notice by publication, and misnames the defendant, is without excuse." These remarks are equally pertinent to a case of substituted service, and particularly where, as in this case, it appears to be an attempt to obtain personal jurisdiction of one who is admittedly a nonresident.

4. Appellant, by way of counterclaim, sets up the alleged promise by appellee to pay the mortgage debt of Scott, and asks that, if the judgment in controversy be found void, he may now recover the amount remaining unpaid on said obligation. The testimony upon this issue is very conflicting. Scott, with other members of his family, testify very positively that such was the agreement; while appellee and other witnesses strenuously deny it. The burden of establishing the promise is upon appellant, and we are inclined to agree with the trial court that the proof offered is insufficient to justify a finding in his favor.

The judgment of the district court is affirmed.

STATE v. SHERIDAN.

(Supreme Court of Iowa. Oct. 9, 1903.)

CONSTITUTIONAL LAW—EVIDENCE OBTAINED BY WRONGFUL SEARCH—IMPEACHING WITNESS.

1. An article obtained by a search of defendant's house under a search warrant issued without authority of law, for the sole purpose of obtaining evidence against him, in violation of Const. art. 1, § 8, guarantying the security of the people in their right to be exempt in their persons, houses, papers, and effects from unreasonable search and seizure, is inadmissible against him.

2. On a prosecution for malicious destruction of ice a witness cannot, on cross-examination, be asked if he did not tell T. that he knew all about the ice deal, and would tell the truth about it, this having no relevancy to his testimony in chief, and, on his answering "No," be contradicted by the testimony of T., as a witness cannot be impeached on a collateral or immaterial matter.

Appeal from District Court, Lyon County: Geo. W. Wakefield, Judge.

Indictment for malicious mischief. Verdict and judgment of guilty, and defendant appeals. Reversed.

E. C. Roach and E. Y. Greenleaf, for appellant. C. W. Mullan, Atty. Gen., and C. A. Van Vleck, Asst. Atty. Gen., for the State.

WEAVER, J. The defendant, an ice dealer, was charged with having maliciously injured or destroyed a quantity of ice belonging to a competitor in business by putting upon it a large quantity of salt. The prosecuting witness claiming that his ice had been maliciously destroyed, and, having been informed that appellant bought a barrel of salt from a local merchant a day or two before that date, filed a preliminary information before a justice of the peace, and caused a warrant to issue for the appellant's arrest. At the same time the prosecuting witness filed an affidavit alleging the purchase of salt by appellant, and stating his belief that said salt

¶ 1. See Criminal Law, vol. 14, Cent. Dig. § 877.

Digitized by Google

was used in perpetrating the act of malicious mischief above mentioned, and that "said salt, or the barrel in which it was contained," was in the possession of appellant at his residence in Rock Rapids. On these allegations he asked for a warrant to search the appellant's residence and seize the described articles if found. A search warrant was thereupon issued, and the officer, in executing it, claimed to have found in the cellar of appellant's residence an empty salt barrel. On the trial in the district court the officer, as a witness for the state, identified the barrel so found, and said article was then offered and admitted in evidence over appellant's objection. The correctness of this ruling is the principal question discussed by counsel. Our state Constitution (article 1, § 8) guaranties the security of the people in their right to be exempt in their persons, houses, papers, and effects from unreasonable searches and seizures. Section 9 of the same article provides that no person shall be deprived of life, liberty, or property without due process of law. Under these provisions we have lately held that the admission of evidence procured by wrongful and forcible examination, by the officers of the state, of the person of one accused of crime, was reversible error. State v. Height (Iowa) 91 N. W. 935, 59 L. R. A. 437. The principle involved was there very thoroughly discussed, and the authorities carefully reviewed, and, so far as the same are applicable here, it is unnecessary to again present them. We shall therefore confine our inquiry upon this branch of the case to the point whether the question now before us falls within the scope of the doctrine announced in that decision. It is conceded by the Attorney General that the search warrant was issued without the authority of law, and that the search and seizure made thereunder were wrongful. It was also shown by the evidence upon the trial, and without dispute, that the search warrant was asked for, procured, and served for the sole "purpose of obtaining testimony" against the appellant. For the purposes of this appeal we may admit it has often been held that the mere fact that evidence has been developed by the wrongful act or trespass of an officer or any other person will not necessarily render it inadmissible, but we are confronted by the further fact that the evidence objected was obtained by a palpable abuse of judicial process. In the Height Case we said that, while an officer may properly testify to criminating facts discovered by him in the execution of a warrant lawfully issued, yet "a party to a suit can gain nothing by virtue of violence under the pretense of process, nor will a fraudulent or unlawful use of process be sanctioned by the courts. In such cases parties will be restored to the rights and positions they possessed before they were deprived thereof by the fraud, violence, or abuse of legal process. * * * The search was for the mere purpose of securing evidence by an invasion of the private person of the defendant, and we think there is no consideration whatever which will justify it." To the same effect, see Reifsnyder v. Lee, 44 Iowa, 101, 24 Am. Rep. 733. The last-quoted clause applies with equal force to the present case. The search was for the mere purpose of securing evidence by the invasion of the private residence of the defendant. The sacredness of his person against such an act is protected by no higher or stronger guaranty than that of his home, his papers, and effects. In Boyd v. The United States, 116 U. S. 616, 6 Sup. Ct. 524, 29 L. Ed. 746, the constitutional prohibition of unreasonable searches and seizures is said to be closely related to the immunity which the citizen enjoys against being compelled to bear witness against himself, and it is there held that the compulsory production by the defendant of an article to be used in evidence against him in a prosecution for crime or enforcement of a penalty is, in effect, a violation of that constitutional provision. If in that case, instead of ordering the defendant to produce the desired article or paper, the court, without authority of law, had issued a search warrant, under which the sheriff invaded the private room or safe of the defendant, and thus obtained the means of securing his conviction, would not the violation of the constitutional guaranty have been as palpable, and the admission of the evidence thus secured as clearly erroneous, as was the method actually employed? It is said, however, that the court will not inquire how the offered evidence has been procured, and, even if obtained by a search warrant in violation of the defendant's constitutional or legal rights, it will still be admitted, if otherwise competent; and that defendant's only redress is an action for damages against the officer or person committing the trespass. It is true there are cases giving seeming support to this doctrine, but most of them, when examined, will be found to be instances in which the incriminating evidence has been discovered by persons acting without color of authority, or by officers as the incidental result of the service of a warrant of arrest or other writ or process legally issued. None can be found, we think, where the state has been permitted to obtain a search warrant in confessed violation of law, and thereby take papers or property from the home of the man suspected of the crime, and use the matter thus procured in securing his conviction. To so hold is to emasculate the constitutional guaranty, and deprive it of all beneficial force or effect in preventing unreasonable searches and seizures. We think the evidence should have been excluded.

2. One Haley was sworn and examined as a witness for the state. He was later recalled on behalf of the defendant. On cross-examination he was asked by counsel for the state: "Q. Did you have any talk with Ed Tressler in the privy back of Wagner's

Digitized by Google

loon, while the grand jury was in session at this term of court, wherein you told Ed Tressler that you knew all about that ice deal, and that you would tell the whole thing, whether your brother Jack was against you or not? Q. Didn't you state in my office, and in the presence of Ed Tressler, while the grand jury was in session, and just before you were called as a witness before the grand jury, that you knew all about the ice deal, and you would be willing to tell it?" The appellant's objection to these questions as being immaterial and not cross-examination were overruled, and the witness answered each in the negative. The state was then permitted to recall Tressler, who testified, over timely objections, that Haley did make the statements referred to. This, we think, was error. It is an elementary rule that a witness cannot be impeached upon a collateral or immaterial matter. Such was clearly the character of this testimony. It had no relevance to the matters stated by the witness in his testimony in chief, and therefore was not cross-examination. The alleged statements were not made by the appellant, nor by the witness in his presence. They were, in effect, a declaration that the witness knew "all about the ice deal," and would tell the truth about it. Assuming that he so said, it had no tendency direct or indirect to incriminate the appellant. The state would not have been entitled to prove it as a part of its case. It was both collateral and immaterial, and should have been excluded.

The judgment of the district court is reversed, and cause remanded for a new trial. Reversed.

FARMERS' & MERCHANTS' BANK v. STOCKDALE.

(Supreme Court of Iowa. Oct. 8, 1903.)

CHATTEL MORTGAGES — EXECUTION—VERIFICATION—DISQUALIFICATION OF NOTARY—DESCRIPTION—CONSTRUCTIVE NOTICE.

1. Where a chattel mortgage was executed to a trustee for the benefit of a private banking partnership, one of the partners, who was acting as cashier of the bank at the time, was disqualified to take the mortgagor's acknowledgment thereto.

2. Where a chattel mortgage was executed before a notary public, who was disqualified, the record of the instrument was insufficient to impart constructive notice to subsequent purchasers of the mortgaged property.

3. A description of property sought to be included in a chattel mortgage as "all other personal property" now owned, or which the mortgagor might acquire during the life of the mortgage, was not sufficiently specific, and a record of the mortgage would not impart constructive notice to subsequent mortgagees.

4. Where a chattel mortgage, after describing the chattels included, contained a recital that all of the property was then owned by the mortgagor, and was in his possession in section 29, township 91, range 20, of a particular county, "and in other places in said county," the words "and in other places in said county" were insufficient to include property in such county not located on section 29, as against a subsequent mortgagee having only constructive notice imparted by the record of such mortgage.

Appeal from District Court, Franklin County; J. R. Whitaker, Judge.

Action to recover the value of certain personal property alleged to have been wrongfully converted by the defendant. Plaintiff claims under three several chattel mortgages; one dated December 27, 1897, executed by W. D. Moore to D. B. Parks, trustee, and covering "all the corn, hay, oats, and other farm products I now own, and all other corn, oats, and hay I may in the future acquire." The mortgage is in usual form, acknowledged before O. F. Myers, notary public, and recorded January 19, 1898. It is conceded that Parks was a trustee for the plaintiff bank. The second mortgage is dated October 5, 1899, executed by W. D. Moore, and Clara A., his wife, to the plaintiff bank, and covers, among other things, "all other personal property I now own, or in the future may acquire, during the life of this mortgage." This mortgage was duly recorded on October 21, 1899. The third mortgage bears date November 19, 1900, is executed by W. D. Moore and Clara A., his wife, to the plaintiff bank, and covers, among other things, "all my stock of corn and corn fodder, wherever it may be, whether owned by me now or in the future acquired, raised, or purchased, especially all such as is bought to fatten cattle and hogs fed by me or to be fed by me; all hay, oats, straw, and other products bought or raised by me now or in the future used by me in feeding and farming. All of which property I now own and the same is in my possession in section 29, township 91, range 20, in said county, and in other places in said county." This mortgage was made a matter of record January 3, 1901. In August, 1901, the said W. D. Moore and Clara A., his wife, to secure an existing indebtedness, executed and delivered to this defendant a mortgage on "corn growing on section 20, township 91, range 20, raised by us during the year 1901." This mortgage was duly recorded September 2, 1901. In November, 1901, the defendant took possession of the corn under his mortgage, and sold the same. This action is brought to recover the value of such corn. There was a trial before a jury, resulting in a verdict and judgment in favor of defendant. Plaintiff appeals. Affirmed.

Jno. M. Hemingway and J. Y. Luke, for appellant. B. H. Mallory, for appellee.

BISHOP, C. J. The contentions of appellant are two: That the mortgages held by it were valid and subsisting liens upon the particular property in question, superior to any lien or claim of defendant, and that the record of such mortgages gave defendant constructive notice of the existence thereof;

¶ 1. See Acknowledgment, vol. 1, Cent. Dig. §§ 104, 106, 107.

that, even if it shall be held that defendant did not have constructive notice by reason of the property description contained in said mortgages, still he had actual notice of the existence of such mortgages, and that plaintiff claimed a lien on the property in question by virtue thereof. At the close of all the evidence in the case the plaintiff embodied its contentions, in substance, as above stated, in a motion to direct a verdict in its favor, which motion was overruled. The court instructed the jury that the mortgage introduced by plaintiff, being the first in point of date, was insufficiently acknowledged, and that the other two mortgages respectively did not contain a sufficiently certain description of the property sought to be mortgaged, and in consequence thereof the record of said mortgages did not impart constructive notice to the defendant. By a separate instruction the question of actual notice is submitted to the jury. As to the first mortgage, it appears that O. F. Myers, the notary before whom the acknowledgment was taken, was at the time a partner in the banking firm (the name Farmers' & Merchants' Bank being one employed simply by a private banking partnership), and was the acting cashier of the bank. That such acknowledgment was void, and that the record of the instrument did not operate to impart notice, is clear. Wilson v. Traer, 20 Iowa, 231; City Bank of Boone v. Radtke, 87 Iowa, 363, 54 N. W. 435.

Taking up now the second of the mortgages, it will be observed, that it purports to be a conveyance of all personal property then owned or to be acquired in the future by the mortgagors. The law contemplates that there shall be a description of the property conveyed or incumbered. Certainly, neither a designation nor a description of any property is afforded by a sweeping statement to the effect that the instrument in question is intended as a conveyance of all the property the mortgagor has, and all that he ever expects to have. The record of such an instrument could not impart notice, because it fails absolutely to furnish any information, such as that by the recording act it was intended should be given. See the cases presently to be cited. The third mortgage, it may be conceded for the purposes of this case, contains a sufficient description of the property in the section and township named. But the property here in question in point of fact was in section 20, and, if it is to be said that the record of the mortgage imparted notice that such was included in the conveyance, it must be because the provision, "and in other places in said county," affords a sufficient description as to the location thereof. We have held repeatedly that the description of property in a chattel mortgage, to be sufficient as against third persons having constructive notice only, must be such as that the property can be identified by reference to the instrument itself, aided by such inquiries as may be indicated or directed thereby. Smith v. McLean, 24 Iowa, 322; Andregg v. Brunskill, 87 Iowa, 351, 54 N. W. 135, 43 Am. St. Rep. 388; Taylor v. Gilbert, 92 Iowa, 587, 61 N. W. 203. The corollary follows that the description in a mortgage which does not thus afford means of identification must be held to be insufficient. There should be a designation of the property conveyed, and of the place where it may be found. Not that it is necessary in all cases to describe each article in detail, but the description should be sufficiently specific to enable a third person to go to the place indicated and set the property apart. State Bank v. Felt (Iowa) 68 N. W. 818, 61 Am. St. Rep. 253; Haller v. Parrott, 82 Iowa, 42, 47 N. W. 996. It must be manifest that a description reading "twenty-five acres of corn hereafter to be grown in Franklin county," would not, taken alone, be sufficient to lead to an identification of such property. It is not a sufficient location of property to say that it is in a county named. Muir v. Blake, 57 Iowa, 662, 11 N. W. 621; Warner v. Wilson, 73 Iowa, 719, 36 N. W. 719, 5 Am. St. Rep. 710. We readily reach the conclusion that the court did not err in overruling the motion to direct a verdict on the ground indicated, nor was there error in the instructions under consideration.

2. Whether defendant had actual notice of the mortgage liens held by plaintiff was properly submitted to the jury. The evidence upon that subject is such that a verdict either way would have been warranted. The verdict, as rendered, should not, therefore be disturbed.

Finding no error in the record, the judgment is affirmed.

BLOOM v. WINTHROP STATE BANK.

(Supreme Court of Iowa. Oct. 6, 1903.)

BANKS AND BANKING—UNACCEPTED CHECK—ACTION BY HOLDER—PLEADINGS—EVIDENCE.

1. The holder of an unaccepted check may bring suit thereon in his own name.

2. In a suit against a bank by the holder of an unaccepted check it appeared that the bank held two notes against the drawer, amounting to almost the amount of his deposit in the bank, and the bank answered that it had applied the deposit to the notes, and paid the balance to the drawer. Plaintiff replied that one of the notes was for rent of a farm owned by the bank and leased to the drawer, and that the bank had agreed that, if the drawer would find a purchaser for the farm, the rent note would be canceled, and that the drawer had found a purchaser. *Held*, that under the issues plaintiff was entitled to prove the making of such agreement.

3. The agreement being parol, evidence of statements by the officers of the bank in relation thereto, and testimony by the drawer of the check that he had fulfilled the agreement, was competent.

¶ 1. See Banks and Banking, vol. 6, Cent. Dig. §§ 380, 385.

Digitized by Google

4. As plaintiff had the same rights against the bank as the drawer of the check, the reply showed a good cause of action, though the note remained uncanceled in the possession of the bank.

Appeal from District Court, Buchanan County; A. S. Blair, Judge.

Action upon a bank check bearing date August 4, 1899, drawn upon the defendant bank for the sum of $191.10, signed by I. T. Bloom, and made payable, by its terms, to the plaintiff or bearer. It appears that prior to the date named there had been deposited in the defendant bank on open account to the credit of said I. T. Bloom the sum of $353.41. At the time of such deposit the bank held two notes executed to it by Bloom—one for $106.42, and a rent note for $186.75—both of which were past due according to the terms thereof, respectively. On its own motion the bank appropriated from the deposit so made the amount of the said two notes, and canceled the same. Thereafter a check in the sum of $114.54 was drawn by Bloom against said deposit account, which, upon presentation, was paid by the bank. The check here in suit was then drawn and presented to the bank on August 10, 1899, and payment demanded, which was refused. In its answer the defendant bank, after pleading the existence of the indebtedness due to it from I. T. Bloom, and the appropriation of so much of the deposit as was necessary to the payment of such indebtedness, alleges that on August 5, 1899, it notified said Bloom of the amount due him in settlement, and that his check for $114.64 would be paid; that thereupon Bloom drew his check on defendant for said sum, which was promptly paid. Defendant says that thereby the account between it and said Bloom was settled in full. In her reply plaintiff alleges that prior to April, 1898, her husband, said I. T. Bloom, had been the owner of a farm in Buchanan county; that title to such farm had passed by sheriff's sale and deed to this defendant; that at the time mentioned defendant leased said farm to said I. T. Bloom for one year, and that the $186.75 note in question was given defendant as and for the rent reserved in such lease. It is then alleged that the defendant at the time agreed with I. T. Bloom that it would give the rent for the year, and surrender his note, if he would furnish a purchaser for said farm at the price of $40 per acre; that during the year said Bloom did furnish a purchaser for said farm, and to whom it was sold at the price named. And it is insisted that thereupon the said rent note became fully paid, and that said Bloom became entitled to a surrender thereof. Upon the issues joined the cause proceeded to trial before a jury. At the close of the evidence for plaintiff the court, on motion, directed a verdict in favor of defendant, and entered judgment against plaintiff for costs. From such judgment plaintiff appeals. Reversed.

Cook & Leach, for appellant. Lake & Harmon and E. E. Hasner, for appellee.

BISHOP, C. J. The motion to direct a verdict was based upon the ground that the action was brought upon an unaccepted check, and the evidence fails to show that the drawer had funds in the defendant bank sufficient to pay the same. Other grounds were embraced in the motion, but such are not made the subject of argument on this appeal, and we need not give attention thereto farther than to say that, in our opinion, the same were not well taken.

1. Upon the question of the right of the holder of an unaccepted check to bring suit thereon in his own name, the courts of the country are not agreed. However, we regard the rule as settled in this state in favor of such right. It was so decided in Roberts v. Corbin, 26 Iowa, 315, 96 Am. Dec. 146, and the rule there announced has been either acquiesced in or affirmed in several subsequent cases. Among others are the following: Schollmier v. Schoendelen, 78 Iowa, 426, 43 N. W. 282, 16 Am. St. Rep. 455; May v. Jones, 87 Iowa, 188, 54 N. W. 231; Thomas v. Exchange Bank, 99 Iowa, 202, 68 N. W. 780, 35 L. R. A. 379. The reasoning upon which the rule is based is fully stated in the cases cited, and need not be repeated here.

2. Of course, there could be no recovery against the bank unless it is made to appear that the drawer of the check had funds on deposit subject to check, and sufficient in amount to meet the same, and that the refusal on the part of the bank to honor the check was therefore wrongful. This brings us to a consideration of the facts shown by the record. In the first instance we may notice the assignments of error based upon the rulings of the court below in connection with the attempt on the part of plaintiff to prove the alleged agreement in relation to finding a land purchaser for the bank. We cannot discuss such rulings in detail. While it is manifest that some of the questions propounded were improper, and some of the answers stricken out were not responsive, still the purpose we have in view will be subserved by saying that under the issue tendered by plaintiff she was entitled to prove the making of such an agreement; that, as the same was alleged to be in parol, statements and admissions on the part of the bank officers having relation thereto were competent. So, too, plaintiff was entitled to prove by her husband that he had fulfilled such agreement on his part. Now, there is in the record some testimony tending to prove that after the execution of the rent note given to the bank, it was agreed between the officers of the bank and Bloom that, if he should find a purchaser for the land at $40 per acre, and a sale was made, the bank would regard the rent note as paid thereby, and would cancel the same; further, that such purchaser was found by Bloom, and the land sold by the bank at the price fixed. The majority of the court think the evidence now in the record sufficient to have taken the case to the jury upon the

Digitized by Google

question of fact involved, and that a directed verdict should not have been ordered on that ground alone, especially in view of the further fact that some of the evidence offered by plaintiff bearing upon the subject was refused, and some that was introduced was afterwards stricken out on motion of defendant. Taking now into consideration that the jury, had the issue been submitted to it, might have found that the land agreement was made and carried out as alleged, we have the question whether the plaintiff can avail herself of such facts to aid in her recovery. It seems to be the contention of counsel for appellee that, inasmuch as plaintiff has elected to bring her action upon the check, she must be limited to showing that money in a sufficient amount was on deposit in the bank at the time the check was drawn; that she cannot recover as upon an assignment of the contract debt due her husband, for the reason that she does not claim to hold such an assignment, and for the further reason that no such cause of action is pleaded. We readily agree that, under the circumstances shown, the bank had all the rights that would have obtained in its favor had I. T. Bloom drawn the check payable to himself, and had he presented the same in person. We think it must be conceded that the bank had no other or different rights. If now—and such are the facts as contended for by appellant—there was an agreement whereby Bloom was to have his rent free in case he found a purchaser for the farm to whom a sale thereof should be made, and that, upon such transpiring, his note given in evidence of his rent indebtedness should be canceled and surrendered as paid, and it shall be made to appear that such a purchaser was found, and a sale made as contemplated, then the conclusion follows naturally and irresistibly, as we think, that the indebtedness of Bloom to the bank evidenced by the rent note became thereby in law as well as in fact extinguished. There was then no debt, and this is not affected in the least by the fact that the note was not canceled or surrendered. It was the absolute right of Bloom to demand and receive such note into his possession, and the bank could not have justified a refusal. True, the bank would have the right to deny the alleged agreement, and if, upon trial of such issue, it could defeat the claim as made by Bloom, no one would question its right to offset the amount of the note against the deposit to the credit of Bloom or otherwise proceed to collect the indebtedness according to its own election. It is sufficient to say, however, that this right on the part of the bank has not been cut off by anything that has been done. It may still be heard in denial of the claim as made, and have its interest in and right to the note established and confirmed according to the truth as it shall be made to appear. Giving force to plaintiff's theory, the case stands precisely as if Bloom had gone in before making his deposit, and had paid the note, but for some reason had neglected to take up and cancel the same. It follows that, if the indebtedness represented by the rent note had been paid or satisfied, as contended for by plaintiff, the act of the bank in assuming to deduct the amount thereof from the deposit account was without force, and gave to the bank no right to refuse to pay over to Bloom the deposit account upon his demand. The right to receive the deposit money is the right that was assigned to this plaintiff through the medium of the check in suit, and the measure of his right to recover, but for the check, measures her right to recover under the check. In our opinion, the court below was in error in sustaining the motion to direct a verdict and rendering judgment against plaintiff for costs. The judgment is accordingly reversed, and the cause remanded for a new trial.

Reversed.

MALLY v. MALLY et al.

(Supreme Court of Iowa. Oct. 9, 1903.)

ESTATE IN EXPECTANCY—ASSIGNMENT—GARNISHMENT OF EXECUTOR.

1. In garnishment proceedings against an executor and devisee by a judgment creditor of an heir, the devisee testified that the heir had made a verbal assignment of his interest to the devisee, but this conclusion was based on conversations in which the heir had merely said that, if the devisee was compelled to pay a certain judgment against the heir, the devisee should have whatever interest the heir might have in the estate when the ancestor died. *Held* insufficient to show a present assignment of such interest.

Appeal from District Court, Polk County; A. H. McVey, Judge.

Catherine E. Mally died in September, 1898, seised of certain lands, which she disposed of in the second paragraph of her last will as follows: "I hereby give, bequeath and devise and will to my son P. F. Mally all of my real estate wherever situated, of which I may die seized, possessed, or entitled to, subject however to the following conditions, to-wit: My son P. F. Mally to be vested with the fee simple title to said land to own the same in his own right in absolute fee simple title but the said P. F. Mally shall receive the same subject by him to my son William E. Mally the sum of fifteen hundred dollars ($1,500.00), and to my son Frederick Mally the sum of six hundred dollars ($600.00) said sums to be paid within six months from the date from the probate of my last will and testament, and in the event that my said son P. F. Mally should die before I do, said real estate shall then go to his legal representatives, subject to the payment of said sum or sums hereinbefore mentioned, and they shall have the right to pay them, the same as my son P. F. Mally would have had." Prior to her death, January 8, 1897, Emma Mally had obtained a judgment against

Digitized by Google

the legatee William E. Mally for the sum of $500 and costs, and after testator's death caused execution to issue against the devisee and P. F. Mally, to be garnished as a supposed debtor of the judgment defendant, and also said execution to be levied upon the said land, and the same to be advertised for sale. The plaintiff alleges that all of the judgment debtor's interest in the testator's estate was orally assigned to him long before the rendition of said judgment in satisfaction of a valid indebtedness owing to him by plaintiff, and for this reason he had no interest in the real estate subject to levy. The sale was temporarily enjoined. The answer put in issue the alleged assignment. Decree was entered finding that there had been no assignment, and the judgment defendant had no interest in the land subject to execution, and the temporary writ of injunction was dissolved, and the petition dismissed. The plaintiff appeals. Affirmed.

Brennen & Brennen, for appellant. Ryan, Ryan & Ryan, for appellees.

LADD, J. Under the will the plaintiff took title to the land subject to the bequest of $1,500 to W. E. Mally. Immediately after testator's death Emma Mally caused execution to be issued on a judgment previously obtained by her against W. E. Mally, and levied on this land. The plaintiff sought to enjoin the sale on the ground that in the lifetime of the testator W. E. Mally had orally assigned to him all of his possible or expectant interest in the testator's estate in satisfaction of a debt due him. Appellant insists that under the evidence the court should have so held. This is the only point raised by him; and for this reason we do not pass upon the more difficult question as to whether the legacy under the will is a mere lien on the real estate or an interest in the land subject to execution. The current of authority is to the effect that an assignment of a naked possibility or expectancy of an heir apparent to an estate, if in good faith and for an adequate consideration, will be enforced in a court of equity after the death of the ancestor. See Jones v. Jones, 46 Iowa, 466, and decisions collected in 4 Cy. 15; exhaustive notes to McCall v. Hampton, in 33 L. R. A. 266, and to 56 Am. St. Rep. 339—a recent case to the contrary. As to whether it must also appear that the assignment was made with the ancestor's knowledge and acquiescence, the authorities are in conflict. In the early case of Boynton v. Hubbard, 7 Mass. 112, this was held to be essential, and that decision has been followed in McClure v. Raben, 125 Ind. 139, 25 N. E. 179, 9 L. R. A. 477, and 133 Ind. 507, 33 N. E. 275, 36 Am. St. Rep. 558; to which some support is given by Alves v. Schlesinger, 81 Ky. 290. The reasons for the rule are tersely summarized in the first opinion in McClure v. Raben: "We regard such contracts and conveyances against public policy. The grantor at the time has no property or interest in the property of his father or ancestor which he can sell or convey, and none which the grantee can purchase. It is a mere gambling contract. It is wagering that the son or heir will survive the father or ancestor, and that the latter will not dispose of the property, and will die intestate, whereby the grantor will, some time in the future, inherit an interest which he can then convey. It operates as a fraud upon the ancestor, and diverts his bounty from a kin to a stranger. It encourages extravagance, prodigality, and vice on behalf of the heir, and in some instances might create an anxiety on the part of an avaricious or vicious purchaser for the death of the ancestor." On the other hand, the opposite view was taken in Mastin v. Marlow, 65 N. C. 695; and in an opinion exhibiting much research the Supreme Court of Texas in Hale v. Hollon, 90 Tex. 427, 39 S. W. 287, 36 L. R. A. 75, 59 Am. St. Rep. 819, shows that want of the notice to and acquiescence by the ancestor has never been regarded by the English decisions as alone controlling. In that case, and also in Fuller v. Parmenter (Vt.) 47 Atl. 1079, notice was held not to be essential where the ancestor was insane at the time of making the assignment. It will be noted that the question is one of much difficulty, and, while raised by the appellee, is not discussed in the brief of appellant. In these circumstances we deem it preferable to postpone decision of the point for full argument, as the case may be disposed of on the facts. The evidence fails to show a present assignment. True, plaintiff testified as a conclusion that his brother W. E. Mally "made a verbal assignment to me of any interest he might have in his mother's estate." But the language from which this conclusion was drawn was detailed by two other witnesses. Trent testified he heard "William say to Paul that he had no property, but that whatever interest would come to him from his mother's estate should be Paul's if he had to pay the sixteen hundred dollars. He stated that whatever interest he had in the estate of his mother should be Paul's." W. E. Mally testified: "I told him in the presence of Mr. Trent, 'I cannot pay you a penny, because I have not got a cent to pay you with, but, if mother ever leaves me anything, you shall have it, and I won't have anything to do with it in case you have to pay the judgment.' * * * I made the statement to Paul that he should have what I might have in my mother's estate in the summer of 1892." From this it is manifest that William had no thought of then transferring his expectancy in his mother's estate. All that was said amounted to no more than a promise to turn over whatever his mother might leave him in event plaintiff should be compelled to pay the judgment. This promise he has never carried out, and for this reason no transfer was ever made to plaintiff.

Affirmed.

Digitized by Google

STATE ex rel. CITY OF ST. PAUL v. DISTRICT COURT OF RAMSEY COUNTY et al.

(Supreme Court of Minnesota. Oct. 16, 1903.)

PUBLIC IMPROVEMENTS — BENEFITS — DESIGNATION OF DISTRICT—NOTICE.

1. Before the board of public works of the city of St. Paul can determine and designate the district within which property will be specially benefited by a proposed local improvement (charter 1900, c. 6, tit. 3, § 7), the notice to property owners provided for in section 25 of the same title must be given. Such determination and designation is a part of the "proceeding to make an assessment."

(Syllabus by the Court.)

Certiorari by the state, on the relation of the city of St. Paul, to the district court of Ramsey county and others. Dismissed.

James O. Michael and George R. O'Reilly, for petitioner. Alexander E. Horn and Wm. Louis Kelly, Jr., for respondents.

COLLINS, J. This cause is here on certiorari to review the decree of the district court whereby the application of the city of St. Paul for judgment against the property of the respondents on account of a local improvement assessment, made to meet the cost of paving certain streets, was denied. The real question is whether, under the "home rule" charter of the city, adopted in the year 1900, the board of public works is required to give the notice prescribed by section 25, tit. 3, c. 6, to interested property owners, of the meeting held, in accordance with section 7, to determine and define the district within which property will be specially benefited by the improvement, and upon which the assessment shall be laid. Section 7 was not in any charter of the city prior to the adoption of that now under consideration. It was inserted in 1900, while other sections somewhat at variance were adopted from other charters without alteration. It provides that, after a contract for making an improvement, for which an assessment is to be made. is awarded, the board of public works shall determine the district within which property will be specially benefited thereby, and shall then compute the total valuation of all of the property within the district subject to assessment for the improvement, according to the last assessed valuation of such property for the purposes of general taxation, and shall also compute the cost of making the improvement, together with the cost of the proceedings for the collection of the assessment. If such cost shall exceed 25 per cent. of the total assessed valuation, the board shall then certify the amount of such excess to the common council, which council shall thereupon either make provision for the payment of the amount of such excess out of the general fund of the city, or shall cancel all proceedings theretofore had relating to the making of the improvement. If the council shall direct the payment of such excess out of the general fund, then the board shall proceed to assess the balance of the cost of the improvement, together with the cost of collection, against the property within the district. Section 7 contains no reference to the giving of notice that a meeting of the board will be held at which the assessment district will be carved out and determined. Evidently the purpose of this section is to protect property owners within the district from an assessment in excess of 25 per cent. of the taxable valuation of their property, and, in order to ascertain whether the assessment will be in excess of this percentage, it is absolutely essential that the board shall first be informed as to the cost of the improvement, and then that the boundaries of the assessment district, and the property over which this cost is to be spread, shall also be determined upon with accuracy and exactness. In no other way can the board or the council decide whether the improvement is one in which the latter body should aid by payment out of the general fund, or one where the cost is to be wholly borne by the property owners within the district because the cost of the same will not exceed 25 per cent. of the total assessed valuation. The necessity of preciseness and accuracy by the board when ascertaining these facts for submission to the council, so that it may act in accordance with the charter provisions, is evident, and will again be referred to. Section 25 has been a part of the charter for many years, and, so far as here material, is in the following language: "Before proceeding to make an assessment for any improvement mentioned in section 23 of this title [which includes paving of streets] said board * * * shall give six days' notice by one publication in the official paper of said city of the time and place of their meeting, for the purpose of making such assessment, in which notice they shall specify what such assessment is to be for and the amount to be assessed. * * * All persons interested in any such assessment shall have the right to be present and be heard either in person or by counsel, and the said board may in their discretion receive any legal evidence and may adjourn, if necessary, from time to time, and place to place." If, then, the designation of the specially benefited district over which the entire cost of the improvement and the cost of collection is to be assessed and levied is a part of the assessment proceedings, within the meaning of section 25, if it is one of the steps which finally result in levying upon each tract of land the amount which its owner is required to pay on account of the improvement, it is obvious that the provision as to the giving of notice must be complied with before the district to be assessed can be determined and designated. If, upon the other hand, the

¶ 1. See Municipal Corporations, vol. 36, Cent. Dig. § 1074.

Digitized by Google

establishment of the district to be benefited by the improvement and upon or over which the cost is to be assessed and levied is no part of the assessment proceedings, section 25 is not applicable, and notice of the meeting is not required. Under the provisions in a former charter (Sp. Laws 1887, p. 335, c. 7, subc. 7, tit. 1, §§ 7, 8) it was held that the notice specified in section 8 must be given to interested parties in advance of any hearing, defining and determining a limited district as embracing the property upon which the assessment for benefits is to be made; that without such a notice and a hearing the board was not authorized to decide upon what district or property the burden should be imposed, and that a predetermination by the board fixing or limiting the assessment district was prejudicial to the rights of those owning property within that district. State ex rel. v. Otis, 53 Minn. 318, 55 N. W. 143. It is true that the new section 7 makes no provision for notice, and that section 8 is altogether changed; but section 25 expressly provides that, before proceeding to make an assessment, notice must be given in the prescribed way. And such a provision is in accordance with the law as it had existed for many years. But, if this notice need not be given until the board is ready to determine just what amount or proportion of the whole is to be charged to each lot within the assessment district—a fact ascertained by mere mathematical calculation—the matter in which the property owner is principally and vitally interested, the laying out of the district, is determined in advance, and he is without a remedy, unless he can be heard when nothing is to be done but the clerical work; a hearing which, if allowed, may entirely change and disarrange the assessment district as previously fixed and determined. At this time the question whether the expense shall be borne by the district itself, or in part by the city, has been passed upon by the city council, and the contract finally entered into. In fact, this formal levy or assessment might be after the work itself had been wholly done. If the property owner could then be allowed to contest the determination of the board as to the boundaries of the district, and through such a contest could change its limits or boundaries, making it either larger or smaller, the entire nature of the proceeding might be altered. In other words, with such a method of procedure we might have a case in which the city had been compelled by the action of the board and of the council, the act of the latter body predicated upon the certificate or report of the former, to defray a portion of the cost of the improvement, and then, through a change of the boundaries of the district upon a hearing involving the clerical work only, have a case where the entire cost should have been borne by the property holders in the district, as finally fixed, and no portion of it by the city. Or the opposite of these conditions might be found. This would lead to confusion, and a positive wrong either to the city or to the property owners. The orderly and only safe way to proceed is to give the notice provided for in section 25, prior to defining the boundaries of the assessment district, and by such a notice and a hearing determine and designate, in advance of the action of the council, the property to be benefited and assessed with exactness and certainty. This determination is quite as much a part of the assessment as the final act of declaring the amount to be levied upon each lot, and is of more consequence to the property owners.

We quite agree with the court below that, in view of the fact that before the enactment of section 7 an assessment district could not be designated without notice, it ought not to be inferred that notice is not now required. So that, unless it is very clear that it was not the intention of the framers of the charter to confer the benefit of notice upon the property owners, their right to have notice and to be heard upon one of the most material questions involved in the assessment proceeding—a right which they had always theretofore enjoyed under former charter provisions—should not be taken from them. There are certain provisions in section 22, tit. 3, c. 6, which cannot easily be reconciled with the provisions of section 7, but they are not involved here, and need no consideration.

The writ of certiorari is dismissed.

ROELEFSEN v. CITY OF PELLA.

(Supreme Court of Iowa. Oct. 9, 1903.)

LIMITATIONS—TOLLING OF STATUTE—INSANITY.

1. Code, § 3453, providing that the times limited for actions shall be extended in favor of insane persons, so that they shall have a year after termination of disability, applies only where plaintiff is insane when the cause of action accrues, and not where he becomes insane a few hours after the injury for which he sues, though on the same day, and as a result of the injury.

Appeal from District Court, Marion County; A. W. Wilkinson, Judge.

Action at law to recover damages for personal injuries received by plaintiff while passing over a sidewalk in defendant city. The trial court sustained a demurrer to plaintiff's petition, and she appeals. Affirmed.

Liston McMillen, for appellant. Crozier & McCormick, for appellee.

DEEMER, J. Plaintiff received her injuries February 8, 1901, but she did not commence her action until May 9, 1902. In the month of October, 1901, she served the city with notice of her injury, but, as this was

¶ 1. See Limitation of Actions, vol. 33, Cent. Dig. §§ 413, 420.

Digitized by Google

more than 60 days after the happening of the accident, her claim is barred under paragraph 1 of section 3447 of the Code, which provides that actions such as this must be brought within three months after the cause thereof accrues, unless plaintiff has, within 60 days from the happening of the injury, given the city a written notice thereof, etc. To avoid the bar of the statute, plaintiff pleaded: "That before midnight of the said 8th day of February, 1901, the pain from said injury became so exceedingly severe that she at that time, before the said midnight, became insane, her said insanity taking on the form of distractedness, delirium, flightiness, and unconscious of mind; and the said pain increasing in severity for weeks and months caused her said insanity to continue for several months. That in October, 1901, and within fifty days from the termination of her insanity, pain, medical expense, and expense for nursing, the plaintiff served upon the city of Pella, and the mayor thereof, a written notice specifying the time and place and circumstances of the injuries hereinbefore stated." She claims that by reason of the facts thus pleaded the statute did not begin to run until the alleged disability was removed, and that she had one year thereafter in which to bring her suit. Section 3453 provides, in substance, that the times limited for actions as provided in chapter 2, tit. 18, of the Code, shall be extended in favor of minors and insane persons, so that they shall have one year from and after the termination of such disability within which to commence said action. It is doubtful if this provision applies to that part of section 3447 to which we have referred, relating to the giving of notice. Morgan v. City of Des Moines, 60 Fed. 208, 8 C. C. A. 569. But, if it does, it by no means follows that plaintiff's cause of action is not barred. It is fundamental that, if the statute of limitations once begins to run, nothing —not even death—will save the cause of action, in the absence of express statute to that effect. The statute on which plaintiff relies has reference to a disability existing when the cause of action accrued, and not to a case where the statute began to run before the disability commenced. The language used by the Legislature leaves no doubt on this proposition. The actions referred to are those which accrued during the minority or insanity of the plaintiff. No such exception existed at common law, and, if there be any relief for plaintiff, it must be found in some statute. Shorick v. Bruce, 21 Iowa, 305. When the statute has commenced to run against a cause of action it will not be suspended on account of the death of the party in whose favor the cause of action has existed, or of the minority of the persons to whom his rights have passed. Bishop v. Knowles, 53 Iowa, 268, 5 N. W. 139. Indeed, it is fundamental that when the statute once commences to run it will not be tolled by the subsequent disability of him in whose favor the cause of action existed. Black v. Ross, 110 Iowa, 112, 81 N. W. 229; Mereness v. Bank, 112 Iowa, 11, 83 N. W. 711, 51 L. R. A. 410, 84 Am. St. Rep. 318. From the allegation of plaintiff's petition it appears that she was of sound mind when she received her injuries, that she became insane as a result thereof, and that there was an appreciable length of time between the happening of the accident and the insane condition. At the time the cause of action accrued—which was when she received her injury—she was of sound mind, and the statute then began to run. Her subsequent insanity did not toll the statute, nor relieve her from the bar thereof. Had there been no appreciable length of time between the happening of the accident and the insane condition of mind, there might, possibly, be some question of her right to recover; but we need not speculate on this proposition, for it clearly appears in this case that several hours intervened. Counsel say that the law does not recognize fractions of a day; hence the two events were practically coetaneous. That for certain purposes the law does not recognize fractions of a day is true, but this principle is not universal. The exact time is often an important element in litigation, and, when it becomes necessary to ascertain the relation of events, the law does consider fractions of a day. Indeed, the time element may be so material that seconds, even, will be considered.

The trial court correctly ruled in sustaining the demurrer, based on the ground that plaintiff's action was barred, and its judgment is affirmed.

O'BANION v. DE GARMO et al.

(Supreme Court of Iowa. Oct. 8, 1903.)

LIQUOR DEALER'S BOND—ACTION ON—WHEN BARRED—AMENDED PETITION—NEW CAUSE OF ACTION.

1. A petition in an action on a liquor dealer's bond for damages to plaintiff's husband was based on a bond describing the premises on which the sales were made as lot 11 of a certain addition. An amended petition was filed two years after the alleged sales were made, stating that the building was located on lot 13. *Held*, that the amended petition set up a new cause of action, which was barred by McClain's Code, § 3447, limiting the period within which actions founded on injuries to rights based on tort could be brought to two years.

2. Under Code, § 2432, providing that the mulct tax shall be a lien on the property wherein the sale of liquor is conducted, and section 2433, requiring the assessor to report the definite location, and section 2448, providing that the bond shall be conditioned to pay damages resulting from the sale of liquors in the premises occupied by the obligor, when the description of the premises is inserted in the bond the sureties cannot be held for damages resulting from sales in premises not contemplated by the bond.

Appeal from District Court, Harrison County; W. R. Greene, Judge.

The plaintiff filed a petition December 28, 1900, in which she alleged that on the 30

Digitized by Google

of January, 1899, her husband obtained at the saloon of the defendant De Garmo intoxicating liquors which contributed to his intoxication, on account of which he was killed by a train of cars; that in September, 1896, said De Garmo filed with the county auditor a bond, with the other defendants as sureties, conditioned for the payment of all damages resulting from the sale of intoxicating liquors upon lot 11 in block 18 of Logan, Iowa. Because of the breach of said condition, she prays for damages occasioned thereby. Issue was joined thereon September 9, 1901, and three days later, during the trial, an amendment to the petition was filed, alleging that the sales mentioned in the petition were from a building located on lot 13, instead of lot 11 of the same block; that another bond had been executed by De Garmo, with the same sureties, and like conditions with respect to sales at the last-named place. To this amendment defendants demurred on the ground that the cause of action was barred by the statute of limitations. The demurrer was sustained, and, as the evidence showed the sales to have been from the premises described as lot 13, a verdict was directed for defendants. From judgment thereon, plaintiff appeals. Affirmed.

C. W. Kellogg and S. H. Cochran, for appellant. Bolter Bros. and Roadifer & Arthur, for appellee.

LADD, J. The petition was based on a bond describing the premises at which the sales of intoxicating liquors to plaintiff's husband were made as lot 11 in block 18. The amendment averred that such sales occurred at another place, namely, lot 13 of the same block, and sought recovery on a second bond so describing the premises. The sales occurred January 3, 1899, in a building on lot 13, and this amendment was filed September 12, 1901, more than two years after the alleged wrong. Two questions arise: (1) Did the amendment set up an entirely new cause of action? (2) Did proof of sales on lot 13 tend to establish a breach of the bond sued on in the petition? It must be kept in mind that the action is on the bonds, and we have no concern with the principal's independent liability. It is also well to remember that the foundation of the action is the sale of the intoxicating liquors, and the consequent intoxication of the husband, occasioning damages to plaintiff. The intoxication was the direct injury resulting from the wrongful act of selling the liquor to the person drinking it, and such injury is the cause of action. That to the wife is wholly consequential. Emmert v. Grill, 39 Iowa, 690. Paragraph 3, § 3447, of Code, expressly limits the period within which actions may be maintained therefor to two years: "Those founded on injuries to the person or reputation, including injuries to relative rights, whether based on contract or [illegible] for a statute penalty within two years." This suit is based on an injury to the relative rights of the wife, and on a contract, to wit, the bond exacted by the statute in compliance with the provisions of the mulct law. This alone disposes of the contention that the amendment to the petition did not set up a different cause of action. True, the injury consisted in producing the intoxication, but liability therefor was determined by the bond, and, after the lapse of the statutory period, the obligation by it created to pay damages ceased. State v. Dyer, 17 Iowa, 227; District Township of Boomer v. French, 40 Iowa, 601. The appellant, however, insists that the law does not require the definite location of the saloon to be fixed, and that therefore sales on either lot were in violation of the conditions of the first bond, describing lot 11. We think otherwise. In the first place the mulct tax is made by the statute a lien on the real property wherein or whereon the business is conducted. Section 2432, Code. Secondly, the assessor is required to report the definite locations. See section 2433. And a list of the properties is to be kept by the auditor and transmitted to the treasurer. Section 2437, Code; paragraph 12, § 2448. To secure the bar to the penalties of the prohibitory law, consent of resident freeholders owning real estate within 50 feet of the building where the business is to be carried on must be obtained; and it cannot be located within 300 feet of a church or school building, or within a half a mile of an agricultural fair. One of the statutory conditions of the bond is "for the payment of all damages that may result from the sale of intoxicating liquors upon the premises occupied by the obligor." See section 2448, par. 3, McClain's Code. These provisions contemplate the particular location of the saloon, and it is for damages occasioned by the sale of intoxicating liquors there, and not elsewhere, that the bondsmen are liable. Possibly an omission of the description in the bond might not invalidate it. See Starr v. Blatner, 76 Iowa, 356, 41 N. W. 41. But when it is inserted the sureties ought not to be held for damages resulting from sales at places not contemplated. See Carter v. Nicol (Iowa) 90 N. W. 352. The rulings of the court were correct

Affirmed.

EDWARDS v. AMERICAN EXP. CO.

(Supreme Court of Iowa. Oct. 8, 1903.)

CARRIERS—EXPRESS COMPANIES—IDENTIFICATION OF SHIPMENTS—CONVERSION—SLOT MACHINES—GAMBLING DEVICES—DEFENSES.

1. The owner of two slot machines in a hotel wrote defendant express company, directing it to obtain the machines from the baggage room of hotel, and ship them to another point. Defendant's agent took two machines from the baggage room, but by mistake took one which belonged to plaintiff, and this machine was forwarded, and never returned, though the consignor, on discovering the mistake, obtained the right instrument from the hotel, which was

forwarded and delivered as the others. *Held* that, since the error was that of defendant's agent, defendant was liable for the conversion of plaintiff's machine.

2. In an action against a carrier for converting a slot machine, it was no defense that the instrument was a gambling device, and was, therefore, without any value which the law would recognize, in the absence of proof as to the manner in which the machine was used or operated, or that it had ever been employed in gambling or other unlawful practices.

Appeal from District Court, Marshall County; Obed Caswell, Judge.

The opinion states the case. Affirmed.

Binford & Snelling, for appellant. J. M. Whitaker, for appellee.

WEAVER, J. Plaintiff alleges that in the spring of 1901 he was the owner of a certain "musical instrument" of the value of $200, at Marshalltown, Iowa, which property the defendant, by its agents and employés, wrongfully took and carried away, and has failed to return or account therefor, and judgment is asked for the damages thus occasioned. The defendant answers that it is engaged in business as a common carrier, and that at the time mentioned in the petition one McArthur caused to be delivered to defendant at the Tremont Hotel two packages, said to contain one slot machine each, and at the direction of said McArthur defendant transported and delivered the same to one Schaefer in Chicago, Ill. It is further averred that said packages were received, shipped, and delivered in good faith, without any notice of the claim of plaintiff to any of said property, and that such notice was not received until after the property had passed from defendant's possession, and it was no longer within its power to return the same to plaintiff. The district court rendered judgment in plaintiff's favor for the value of the machine, and defendant appeals.

The presumption which supports the judgment of the trial court in an action at law requires us to give the appellee the benefit of the most favorable construction which can fairly be placed upon the testimony. The record will justify the conclusion that at the time in question there were three slot machines temporarily stored in the basement or baggage room of the hotel, although there is testimony to support a finding that but two of those three were in this room; the third being in another room on the same floor. Two of the instruments belonged to McArthur and one to the plaintiff. On February 21, 1901, McArthur, being at Des Moines, wrote defendant's agent at Marshalltown: "Kindly ship to Peter J. Schaefer, Chicago, Ills., two slot machines; the one that was returned from Tama and the other you will find at the Tremont Hotel." The reference in this letter to the "one returned from Tama" appears to have been understood as directing attention to a machine which had been received for McArthur from that place and had been delivered by defendant at the hotel. On receipt of the letter the agent gave it to defendant's driver, and directed him to go to the hotel and get the machines therein called for. The driver applied to the landlord or manager of the hotel, and, being told that the machines were "down in the baggage room," went to the place designated, and, finding two slot machines there (and only two, according to his statement), took them to defendant's office, where they were billed and shipped to Chicago. On March 5, 1901, McArthur, having discovered that one of the machines shipped to Schaefer belonged to plaintiff, notified defendant's agent at Marshalltown of the mistake, and asked to have the right instrument obtained from the hotel and forwarded to same address, which was done accordingly. Plaintiff's machine was never returned.

The appeal is based principally upon the proposition laid down in Hutchinson on Carriers (2d Ed.) § 115, to the effect that a common carrier "accepting goods for carriage in good faith from a person not the owner, but in apparent control of them, and able immediately to assume the actual custody of them, and after carriage to the destination delivers them again to such person, is not liable to the true owner as for conversion." The principle here announced may be conceded to its fullest extent without requiring a reversal of the judgment in this case. Neither the plaintiff nor McArthur, nor any other person having apparent possession or control of this machine, delivered it to the defendant. Its agents—acting, it is true, in entire good faith—undertook, in excess of its ordinary duties as common carrier, to select and identify the machines as called for by McArthur's letter, and in so doing unfortunately took one belonging to plaintiff. If A., having a horse feeding in the same pasture or stable with the horse of B., requests a carrier to get his animal, and ship it to another place, and the carrier by mistake takes possession of the animal belonging to B., it would be a hard rule, indeed, which would deny the latter any remedy against the party by whose error or trespass his property has been lost. The mistake in the present case was not chargeable to McArthur, for he did not direct defendant to ship this machine. Neither was it chargeable to the hotel proprietor, who did not attempt to select or point out the machines belonging to McArthur. Still less can it be said that plaintiff himself was in any manner to blame for the confusion by which he has been made to suffer damage. The judgment of the district court has sufficient support in the record.

It should also be said the answer alleges that the machine in controversy was a gambling device, and therefore without any value which the law will recognize. This plea is mentioned in argument, but no reason or authority is urged in its support. The machine is described by the witnesses as a "music'

Digitized by Google

black cat," having "jack pots in it," and is said to be "what is known as a gambling machine." It is also shown to have had at that time a market value of $150 to $200. No fact is stated as to the manner in which the device is used or operated, nor is it shown ever to have been employed in gambling or other unlawful practices. We know of no law which will justify us in saying the owner of such property is without redress against a person who deprives him of it. A cold chisel may be a burglar's tool, yet has a legitimate use and value; cards and dice are employed in gambling, yet are not denied a place among legitimate merchandise; and, so far as has yet been revealed to the court, there may be some honest and harmless employment for a "musical black cat with jack pots in it."

There appears to be no reversible error in the record, and the judgment of the district court is affirmed.

EDWARDS & ANDERSON v. OLIN et al.

(Supreme Court of Iowa. Oct. 8, 1903.)

JUDGMENT — EXECUTION — SUPERSEDEAS — STAY — FRAUDULENT GRANTEE—PURCHASE AT EXECUTION SALE—LIEN.

1. Code, § 4128, enacts that no proceeding under a judgment or order shall be stayed by an appeal, unless appellant executes a bond, and that, when filed, the clerk shall issue a written order staying all proceedings. Section 4130 provides that, if execution has issued prior to the filing of the bond, the clerk shall countermand the same, and by section 4131 property levied on and not sold at the time such countermand is received by the sheriff shall be at once delivered to the judgment debtor. *Held*, that a supersedeas bond becomes effectual to prevent further acts of the sheriff under an execution in his hands only when the countermand reaches the sheriff, and a sale consummated before receipt of the countermand is valid.

2. Where the grantee of property in a conveyance fraudulent as to creditors subsequently purchased the same land at a sale under execution against the grantor, he was, in an action by a creditor to subject the land to payment of the creditor's lien, entitled to a priority to the amount that he had paid on the execution sale.

Appeal from District Court, Taylor County; H. M. Towner, Judge.

Action to recover indebtedness due plaintiffs from defendant E. A. Olin. An attachment was sued out in the action, which was levied on forty acres of land formerly belonging to E. A. Olin, and which had been transferred to defendant G. A. Olin, such transfer being, as alleged, in fraud of plaintiffs' rights as creditors of E. A. Olin. G. A. Olin claimed title not only by conveyance from E. A. Olin, but by execution sale under a judgment recovered in an action by the Clearfield Bank against E. A. Olin, the certificate of such sale having been assigned to G. A. Olin by the bank, and the sheriff's deed taken by him. On trial to the court judgment was rendered for plaintiffs for $550 against E. A. Olin. The court found also that the conveyance to G. A. Olin was invalid as against plaintiffs, having been given and accepted with intent to defraud creditors; and that the sheriff's deed to G. A. Olin was invalid for the reason that the sale was void, having been made after the filing of supersedeas bond and recall of the execution by the clerk of the court. The defendant G. A. Olin appeals. Reversed.

Spence & Smith, for appellant. Flick & Jackson, for appellees.

McCLAIN, J. Errors are assigned on the admission of evidence, but the court seems to have allowed such evidence to be introduced subject to objection made, and it does not appear that any evidence which was subject to proper objection was considered by the court in reaching its conclusion. The findings are supported by ample evidence, without considering that which was objected to. The case seems to have been practically treated as in equity, without objection on the part of appellant, and, while appellant no doubt might have insisted on rulings, he did not do so, and cannot have a reversal, unless it appears that the evidence proper to be considered does not support the findings.

That the conveyance from E. A. Olin to G. A. Olin was executed and accepted for the purpose of defrauding creditors is not, to our minds, doubtful under the evidence. This question was before the court in the case of Clearfield Bank against these same defendants, 112 Iowa, 476, 84 N. W. 508, and that conclusion was reached. As to G. A. Olin's claim of title to the property by reason of purchase of the certificate of sheriff's sale from the Clearfield Bank, it is urged that the sale was made after the filing of the supersedeas bond, and therefore was invalid. The sale was by the sheriff of Ringgold county on an execution issued by the clerk of Taylor county. The supersedeas bond was filed and approved on the 20th of January, 1898, by the clerk of the district court of Taylor county, and he testifies that he immediately wrote the clerk of Ringgold county, recalling the execution. The sale by the sheriff of Ringgold county was on the day following. A careful examination of the abstract (which, by the way, is not accompanied by any index, as required by the statutes and rules of this court on the subject) fails to reveal any evidence that the recall of the execution was indicated in any way to the sheriff of Ringgold county before the sale. Our understanding of the statute (McClain's Code, §§ 4128–4131) is that the supersedeas bond becomes effectual to prevent further action of the sheriff under an execution already in his hands only when the countermand from the clerk reaches the sheriff, and that a sale by the sheriff before the receipt of this countermand is valid. We are inclined, therefore, to the view that the Clearfield Bank had a valid certificate of purchase, which it could transfer to G. A. Olin, and that by the sheriff's deed to G. A. Olin he acquired the right which the Clearfield Bank

Digitized by Google

had. But, as he was already the owner of the fee title by the conveyance from E. A. Olin, his purchase of the certificate simply extinguished the claim of the Clearfield Bank. G. A. Olin is therefore entitled to a lien on the property prior to the claim of plaintiffs to the extent of the amount paid. The consideration recited in the deed is $1,220.75, which represents the amount for which the property was sold to the Clearfield Bank, and for which the sheriff issued a deed. Counsel in argument assume that the amount paid by G. A. Olin to the bank was $1,440. Possibly this may be true, as the bank was entitled to interest in the event G. A. Olin should redeem. But we do not find any evidence in the record as to the amount actually paid.

Conceding, however, that G. A. Olin is entitled to priority to the extent of even $1,440, it appears that the property in controversy is of considerably greater value, and probably of sufficiently greater value to satisfy plaintiffs' claim. It is, indeed, suggested in argument that the premises were covered by a mortgage of $1,200, but there is no competent evidence as to any such mortgage, nor does the record suggest any information with reference thereto which will enable us to take it into account in determining whether there is a surplus for the satisfaction of plaintiffs' claim. Our conclusion is that the lower court was in error in holding the assignment of the Clearfield Bank's certificate of sale to G. A. Olin to be in fraud of plaintiffs' claims, and the decree of the lower court is reversed, and the case is remanded, with direction that the property in controversy be sold, and, after deducting from the proceeds of the sale the amount paid by G. A. Olin to the Clearfield Bank in satisfaction of the certificate of sale held by it, not exceeding the amount which would have been necessary to pay the bank in redemption from such sale, the balance be applied, so far as necessary, to the satisfaction of plaintiffs' judgment.

Reversed.

PLANO MFG. CO. v. KAUTENBERGER.

(Supreme Court of Iowa. Oct. 12, 1903.)

ACCOUNT STATED—PARTICULAR ITEMS—DEBITS OR CREDITS—EVIDENCE—CONCLUSIONS—DIRECTION OF VERDICT.

1. Where, in an action for a balance due on an account for harvesting machinery, etc., it appeared that an item of $93 for "machines burned" was entered on the credit side only for the purpose of balancing the account, and the item in fact represented a debit, the fact that it was in black ink instead of red, and appeared on the credit side of the account, was not so conclusive on the issue as to whether the same was a credit or debit as to justify the court in an action to recover such sum in directing a verdict for the defendant.

2. In an action to recover a balance due on an account stated, an answer to an interrogatory that defendant appeared to be satisfied with the settlement, and that witness made defendant all the rebates and allowances to which he was entitled, was admissible.

3. In an action for a balance due on an account stated, evidence of a witness, who settled the account, that defendant fully understood that he owed and was to pay plaintiff the balance in question, was objectionable, as a conclusion.

Appeal from District Court, Keokuk County; John T. Scott, Judge.

Action at law to recover an amount due on an alleged settlement. Directed verdict for defendant, and plaintiff appeals. Reversed.

Brown & Willcockson, for appellant. Stockman & Hamilton, for appellee.

DEEMER, J. Originally the action was to recover a balance due on open account. After defendant had answered, pleading an accord and satisfaction, the plaintiff amended its petition, claiming a balance due on settlement amounting to $93, with interest. To this defendant filed a general denial, and also alleged that the $93 claimed by plaintiff represented certain machines which had been shipped to defendant that were burned, and which amount was credited to defendant on the settlement, the balance having been paid in cash at the time of the alleged settlement. On these issues the case was tried, resulting in a directed verdict for defendant. It appears that an agent and adjuster representing plaintiff made a settlement on or about October 10, 1898, and at that time a settlement sheet was drawn up, subject to plaintiff's approval, which was signed by defendant and said agent, which showed on the credit side an item, "Machines burned, $93.00." This credit sheet has been certified for our inspection, but it is in such form that it cannot accurately be reproduced in an opinion. It is sufficient to say that this item, as it appears on the credit sheet, is as consistent with the idea that it really represents a debit, although appearing on the credit side, as that it represents an absolute credit. Had the item appeared in red ink, every bookkeeper would doubtless have said that it represented a debit, although appearing on the credit side, and that it was entered on that side for the purpose of balancing the account. From the fact that it appears in black ink, it may well be said that the credit sheet itself is ambiguous, and subject to explanation. At any rate, it does not so conclusively appear from the sheet itself that this item is a credit as to justify the trial court in directing a verdict for the defendant. In addition to this sheet, plaintiff offered evidence to show that there was no agreement that defendant should have credit for the machines which had been burned, but, on the contrary, that defendant in fact agreed to pay for these machines; and that the item appearing on the settlement sheet for the value of these machines represented a debit. The adjuster's evidence was taken in the form of a deposition, and in answer to what was known as "Interrogatory

¶ 3. See Evidence, vol. 20, Cent. Dig. § 2156.

Digitized by Google

10," which was in the form of the usual omnibus interrogatory to "state any other fact," etc., answered as follows: "A. Mr. Kautenberger appeared to be satisfied with the settlement, and fully understood that he owed and was to pay the Plano Mfg. Co. the $93.00 in question. He understood that fully, because in the settlement at that date I made him all the rebates and allowances to which he was entitled on any kind of a plea, and more than he could have rightly claimed off of the Plano Mfg. Co. had I not felt disposed to be very lenient with him." Defendant moved to exclude the answer, for the reason that it was a conclusion, and incompetent, and for the further reason that the settlement sheet was the best evidence as to the amount due. This objection was sustained. It is manifest from what we have said that the latter part of the objection was not good. The first part of the objection was good in part only. What defendant understood was a mere conclusion of the witness, and was inadmissible; but that defendant appeared to be satisfied with the settlement was a fact which could be given in evidence. The amount of the rebates given was also a fact to which the witness could testify. The court was in error in sustaining the objection as a whole. The matter to which we have referred should have been received in evidence.

For the errors pointed out, the judgment is reversed, and the cause remanded for a retrial. Reversed.

COLE v. LAIRD.

(Supreme Court of Iowa. Oct. 8, 1903.)

SALES — ACTION FOR PRICE — RESCISSION — BREACH OF WARRANTY—PLEADING—AMENDMENT.

1. In an action for the price of a windmill defendant set up a counterclaim for breach of warranty, asking damages for loss of flesh and growth in his cattle due to failure of the mills to furnish an adequate supply of water. *Held*, that striking such damages from the counterclaim was proper, they being too remote.

2. In an action for the price of personalty, both parties having introduced evidence on the question whether defendant purchased the property as agent for another, it was error to refuse to permit him to amend his answer by pleading that he bought as an agent.

3. In an action for the price of a windmill defendant set up a counterclaim founded on a breach of warranty, and claimed thereunder damages due to loss of a pasture owing to failure of the mills to furnish an adequate water supply. *Held*, that loss of pasturage was too remote.

4. In an action for the price of a windmill defendant claimed a rescission of the contract, and there was evidence that after the discovery of defects in the mill plaintiff promised to repair them, and unsuccessfully attempted to do so, and that defendant then offered to return the property, which plaintiff refused to receive. There was evidence showing a warranty of the mill. *Held*, that the evidence was sufficient to take the case to the jury on the issue of rescission of the contract.

5. In an action for the price of a windmill sold with warranty, there being evidence that defendant offered to return the property after it was discovered that there was a defect, the question as to the reasonableness of time within which the offer was made was for the jury.

6. Under Code, § 3620, providing that one may set up inconsistent defenses, in an action for the price of a windmill it was competent for defendant to plead that he did not buy the goods, and also rescission of the contract.

7. In an action for the price of a windmill defendant set up a counterclaim consisting of a breach of warranty, pleading as damages the expense of erecting a new mill in place of the old one, but not pleading any expense of removing the mill. *Held*, that he was not entitled to go to the jury on that issue.

Appeal from District Court, Taylor County; R. L. Parrish, Judge.

This action was brought by Cole against Laird to recover the purchase price of two windmills. The trial court directed a verdict for plaintiff, and defendant appeals. In presenting the case to this court he reversed the names used in the title, contrary to the statute and to our rules, and has thus introduced confusion into a record, which, without this mistake, is not clear. The case should be entitled Cole v. Laird, Appellant, and it will so appear in the Reports. Reversed.

J. C. Askin, for appellant. Flick & Jackson, for appellee.

DEEMER, J. The record is in a very confused state, and we have had some difficulty in arriving at the exact points for decision. The action is to recover the purchase price of two windmills, with tanks and fixtures, alleged to have been sold to defendant, Laird. After admitting that plaintiff was and is engaged in the hardware business at the town of Gravity, defendant interposed a general denial of the allegations of the petition. In a distinct division he pleaded rescission of the contract, and in another what, as we understand, amounts to a plea of failure of consideration. He also pleaded a counterclaim for breach of warranty, and also asked damages for false and fraudulent representations in the sale of the mills. The damages asked under this counterclaim were, first, $10 expense in putting up other mills; and, second, loss of flesh and growth in defendant's cattle, due to the failure of the mills to furnish an adequate supply of water. This latter element of damages was stricken out on motion, and thereupon the defendant amended by claiming damages due to loss of a pasture during the season of 1899. A motion was made to strike this claim for damages, but it was overruled. Plaintiff filed a reply, in which he denied any warranty or misrepresentation, and further pleaded that whatever of fault there may have been in the mills was due to defendant's insistence on improper equipment of the mill. It was on these issues, as we understand it, that the case was tried, resulting in a directed verdict for plaintiff for the price or value of the property.

¶ 6. See Pleading, vol. 39, Cent. Dig. §§ 189, 190.

Digitized by Google

There was manifestly no error in striking from defendant's counterclaim damages due to loss of flesh and growth of cattle. Such damages are entirely too remote. There remained, however, his plea of failure of consideration, his claim of rescission, and his counterclaim growing out of breach of warranty, resulting in damage to pasture and expense in erecting other mills. Defendant proved without objection that he purchased the mills for one Finn, and not for himself, and that plaintiff knew of this fact when he sold the mills, and in fact gave credit to Finn. After this evidence was in, plaintiff moved to strike it, because irrelevant to any issue in the case. The trial court sustained the motion on the theory that such evidence was not relevant under a general denial. After the evidence was closed, defendant offered to amend his answer by pleading that he bought the mills as the agent of Finn. Whether this offer was made before or after plaintiff's motion for a directed verdict was filed is a matter of dispute, which we do not regard as very material. The amendment was prepared and filed before the ruling on the motion to direct was made. Two questions are presented with respect to this matter: First, was defendant's evidence that he did not buy the property, but purchased the same for one Finn, admissible under a general denial? And, second, if not admissible, was the court in error in denying the amendment to the answer pleading purchase by defendant as agent? We think the evidence was relevant under the general denial. Plaintiff, in order to recover, was bound to show that he sold the goods to the defendant. Under his general denial defendant could prove any fact that would negative this claim. A sale involves something more than the delivery of goods to another. It must appear also that a transmutation of property from one to another for an agreed price was intended. A sale is a contract whereby one acquires a property in the thing sold and the other parts with it for a valuable consideration. Plaintiff was bound to prove that he made a contract with the defendant for the sale of the goods to him, and defendant, under his general denial, could show that he did not purchase the goods, but that he bought them for another. Gilbert v. Baxter et al., 71 Iowa, 327, 32 N. W. 364, seems to be decisive of this question. There it is expressly held that a general denial puts in issue the fact of a contract having been made by another with authority. But if this be not true, we think the court was in error in denying to defendant the right to amend by making his issues conform to the proofs. Both sides offered evidence as to this matter of agency, and we think the case should have gone to the jury. While the matter of allowing such amendments is discretionary, still this discretion is a legal one, and should always be exercised with a view to substantial justice. Denying the right in this case may have had the effect of obligating defendant to pay for property which he never purchased, and of which he may never receive any benefit. The case should have gone to the jury on the question of the sale of the property to the defendant.

2. The defendant did not prove any of the damages claimed by him in his counterclaim, unless it be loss of pasturage; but that was entirely too remote. Prosser v. Jones, 41 Iowa, 674.

3. On the issue of rescission there was evidence that, after discovery of the defects in the mills, plaintiff promised to repair them, and attempted to do so, but that he was unsuccessful in the attempt. There was also some evidence that defendant thereupon offered to return the property to plaintiff, but that plaintiff absolutely refused to receive it. This, with the evidence relating to the warranty of the mills, was sufficient to take the case to the jury on the issue of rescission of the contract. Padden v. Marsh, 34 Iowa, 522. The question as to reasonableness of time within which the offer to return was made was for the jury under proper instructions. While the defenses interposed were inconsistent, this was no reason for not submitting them to the jury. Code, § 3620; Thorson v. Baker, 107 Iowa, 49, 77 N. W. 510. This is not a case of a claim to property under two inconsistent rights, as was Crawford v. Nolan, 70 Iowa, 97, 30 N. W. 32. Defendant may, therefore, plead in answer that he did not buy the goods, and also rescission of the contract.

In order that we may not be misunderstood, it is well to say that, had defendant pleaded as part of his damages for breach of warranty the expense of removing the mills, the case should have gone to the jury on that issue. This he did not do. His claim is for erecting new ones in the place of the ones furnished by plaintiff.

For errors pointed out, the judgment must be and it is reversed.

HUNN v. ASHTON et al.

(Supreme Court of Iowa. Oct. 14, 1908.)

REAL ESTATE BROKERS — COMMISSIONS FOR PROCURING PURCHASER — EVIDENCE — ADMISSIBILITY — SUFFICIENCY — AGREEMENT —CONSTRUCTION—REVOCATION OF AUTHORITY.

1. A party excepting to a ruling requiring him to make certain allegations in his pleading more specific waives any error in the ruling by thereafter pleading over in compliance therewith.

2. Where, in an action by a real estate agent to recover commissions for a sale of land, defendant denied the agency of plaintiff, denied that the purchaser was procured by him, and alleged that the sale was procured by another agent employed by defendant, evidence as to the employment by defendant of other agents to sell the land was admissible.

3. An agreement between an owner of real estate and an agent whereby the latter was appointed to collect the rents, make necessary

¶ 1. See Pleading, vol. 39, Cent. Dig. § 1427.

Digitized by Google

improvements, keep the property insured, pay the taxes and the expenses for the improvements that might become necessary with a view of procuring purchasers, and receive for compensation a specified per cent. of the amount collected, did not constitute him an agent with authority to procure a purchaser of the property.

4. Where the owner of real estate, after employing an agent to collect the rents, make improvements, keep the property insured, etc., took the property out of the hands of the agent, and demanded and received of him the papers relating to the property, including the agreement appointing him agent, the authority of the agent, if broad enough to empower him to procure a purchaser of the property, was revoked.

5. Evidence in an action by a real estate agent to recover commissions earned in making a sale of real estate for defendant *held* insufficient to support the claim that the sale was made by the agent, or that he was the inducing cause thereof.

Appeal from District Court, Polk County; W. F. Conrad, Judge.

Action at law to recover a sum alleged to be due plaintiff, a real estate agent, as commissions earned in making a sale of real estate for defendants. There was a trial to the court, a jury being waived. Judgment was rendered in favor of defendants for costs, and the plaintiff appeals. Affirmed.

C. E. Hunn, for appellant. C. H. Sweeney and Halloran & Starkey, for appellees.

BISHOP, C. J. Upon entering their appearance in the action the defendants filed a motion addressed to the petition asking that some of the allegations thereof be made more specific. This motion was sustained, and plaintiff now assigns error based upon the ruling. Whatever may have been the theory upon which the ruling was predicated, and whether such ruling was correct or otherwise, we cannot consider the assignment, for the reason that the record shows that the ruling was complied with by an amendment filed in which the additional facts called for were set out. We may concede that a ruling upon a motion for more specific statement, certain conditions being presented, may be the proper subject of an assignment of error; but to have any force it must appear that the complaining party elected to stand upon his pleadings, or upon the ruling as made. Here the motion having been sustained, the plaintiff, although saving an exception at the time, thereafter elected to plead over in compliance with the ruling. The effect of this was to waive any error, if such there was, in the ruling. Denby v. Fie, 106 Iowa, 299, 76 N. W. 702; Hurd v. Ladner, 110 Iowa, 263, 81 N. W. 470.

2. Over the objection of plaintiff, defendants were allowed to introduce evidence relative to the employment by them of real estate agents other than plaintiff to sell the property in question, and of this plaintiff complains, and assigns error. We think the evidence was properly admitted. It is undoubtedly true, and this is what the cases [illegible] by counsel hold, that where one employs a real estate agent to secure a purchaser for property, and the agent enters upon his employment, and is successful, he is entitled to his compensation in full. As to him it is immaterial how many other agents were employed or paid. But in the case before us the defendants were denying the agency of plaintiff. They were denying that the purchaser for the property was procured by him, and were asserting that the sale on account of which plaintiff was claiming a commission was actually procured and brought about by another real estate agent, who had been employed by defendants, and who had been paid by them for his services. The evidence offered, therefore, had a material bearing upon the defense thus asserted, and was properly admitted.

3. The contention of plaintiff is that he was employed by defendants to procure a purchaser for certain real estate situated in the city of Des Moines, and then owned by the defendant Grace E. Ashton; that he did secure a purchaser in the person of F. M. Hubbell, who took the property at the price demanded by defendants. The defendants deny the agency of plaintiff, and deny that he secured for them a purchaser for the property in the person of said Hubbell; that the sale to Hubbell was procured through other agents, who were paid by them for the service. Plaintiff insists that under the evidence judgment should have been entered in his favor. In this we cannot agree. In 1895 plaintiff was employed by defendant Grace E. Ashton to take charge of the property in question, with other property of like character in the city of Des Moines, the agreement therefor being in writing, and the material part thereof being as follows: "For the collecting of rents, making such improvements as is necessary to keep the property in fair condition, keeping the property insured, paying taxes and such other improvements that may become necessary with a view to procuring purchasers, and to make at suitable times reports of money collected, paid out," etc., "and to receive for compensation eight per cent. of the amount collected," etc. It is conceded that plaintiff acted under such employment for some time collecting rents, paying taxes, making improvements, etc. It appears, however, that after the lapse of some time defendants became dissatisfied, and appointed C. C. Nourse as their attorney to take the property out of the hands of plaintiff, and to demand and receive of him all papers and documents relating to the properties, including the written agreement above referred to. Upon demand plaintiff turned over to Nourse all charge of the properties, and all papers, etc., in his hands relating thereto, and the property was then by Nourse put [illegible] hands of Hat[illegible] & McCutch[illegible] [illegible]ected ver- [illegible]ice or value of agents. Coun[illegible] app[illegible] the written a[illegible] [illegible]onstituted his client an[illegible] [illegible]pose of and

Digitized by Google

with authority to procure a purchaser for the properties of appellee; that the change subsequently made by appellee had relation only to the immediate charge of the properties, and did not have the effect to revoke the agency for the sale of the properties. We cannot see how either proposition can be accepted as true. While the instrument discloses a purpose to make sale of the properties at some time, yet there is no language that can be distorted into a direct authority to the agent to make sales, and there are no terms or conditions of sale specified. But, if this were not so, we think the evidence in the case makes it clear that the revocation of authority by defendants was full and complete; that for all purposes the agency of plaintiff then ceased and was determined. With this conclusion we are content, and no good purpose, as we perceive, can be subserved by any discussion of the evidence in detail.

It follows that the right of plaintiff to recover, if any he has, must arise out of a subsequent employment, and the performance of service by him thereunder. No direct employment is claimed. It appears only that plaintiff entered into correspondence with the defendants, then residing in the East, asking for prices, terms of sale, etc., and stating that he had an offer for the property, and believed he could effect a sale thereof. Defendants replied, saying, in substance, that offers would be considered, but for some time no price was named by them. Plaintiff called the attention of Hubbell to the property, and made continued efforts to effect a sale to him. Offers made by Hubbell were communicated by plaintiff to defendants, and a sale recommended, but all such were refused. Finally defendants announced a price which they would take, being considerably in excess of any offer theretofore made, and it appears this was communicated not only to plaintiff, but to Hatton & McCutcheon. The latter firm went to Hubbell, and made the sale to him at the price fixed. Conceding now that, had the negotiations by which the property was finally sold to Hubbell been completed by plaintiff, he would have been entitled to recover of defendants a commission—a debatable point, to say the least—yet we discover no ground for recovery based upon the conditions as presented. Accepting the claim of agency as contended for by appellant, still it is to be said from the record that his authority to sell was not exclusive. Every offer he had secured from Hubbell had been rejected, and it does not appear that the price of the property, as finally announced by defendants, was ever submitted by plaintiff to Hubbell. These were the facts as found by the court below, While [illegible] the well-known rule they are comments is discr[illegible] as would [illegible] the finding of a jury. [illegible] one, and s[illegible] the situation, we think it m[illegible] to subst[illegible] evidence does not warrant t[illegible] case may [illegible] a sale of the property was made by plaintiff, or that he was the inducing cause thereof. The cases cited by counsel have no application to such a state of facts, and we need not, therefore, review them.

We reach the conclusion that the judgment of the court below was right, and it is affirmed.

SIOUX CITY STOCK YARDS CO. v. FRIBOURG.

(Supreme Court of Iowa. Oct. 12, 1903.)

BANKS — INSOLVENCY — RECEIVERS — PREFERRED CLAIMS—STOCKHOLDERS' DOUBLE LIABILITY ASSESSMENT — APPLICATION OF FUND—PREFERENCE.

1. Under Code, §§ 1882, 1883, authorizing a double liability assessment on stockholders of an insolvent bank, and providing that the fund derived from such assessment shall be distributed equally among all the creditors of the corporation in proportion to the amount due each, the holder of a preferred claim is not entitled to have the same paid from such double liability fund to the exclusion of other creditors.

2. Where an order establishing a claim against an insolvent bank directed that it should be treated as a preferred claim, and should be paid "out of any funds of said estate remaining in the receiver's hands applicable thereto," and at the time of the allowance the entire assets of the estate had been distributed among creditors, or applied to receivership expenses, such order did not entitle the preferred creditor to have the claim paid out of the stockholders' liability fund subsequently accumulated, to the exclusion of other creditors.

3. Where a claim of a creditor of a bank was entitled to preference from the general assets, and a large portion thereof had been used to enforce a stockholders' double liability assessment for the benefit of general creditors, without any part of such preferred claim being paid, such claim is entitled to a preference out of such double liability fund to the extent that the general assets were so used.

Appeal from District Court, Woodbury County; George W. Wakefield, Judge.

Appeal from an order as to the distribution of the assets of the Union Stock Yards State Bank in the hands of a receiver. Reversed.

Hubbard & Burgess, for appellant. J. S. Lawrence and Swan & Quincy, for appellee.

McCLAIN, J. In 1893, in a proper proceeding, a receiver was appointed for the Union Stock Yards State Bank, who proceeded under the orders of the court to collect the assets of the bank for the purpose of distributing them among its creditors. One H. P. Chesley, receiver of a corporation known as the Union Stock Yards Company, filed a claim with the receiver of the bank in the sum of $5,246.42, which claim was subsequently assigned to the Sioux City Stock Yards Company, which is the intervener in the proceeding now before us. On the application of intervener, the court, on the 18th of July, 1898, decreed its claim to be a preferred claim, and ordered it paid as such out of any funds of the estate of the bank which might come into the receiver's hands. In the

meantime other preferred claims had been allowed and paid out of the general assets of the bank, and, as the assets after the payment of these preferred claims were not sufficient to pay the claims of general creditors, a 50 per cent. assessment on stockholders on account of their double liability was made (see State v. Union Stock Yards State Bank, 103 Iowa, 549, 70 N. W. 752, 72 N. W. 1076), the proceeds of which, coming into the hands of the receiver from 1895 down to the date of the trial in the lower court, amounted to about $26,000, of which the receiver at the time of the trial had on hand $5,673.65. At that time the receiver had on hand only $10, derived from the general assets of the bank. The present controversy arises on an application of the intervener, the Sioux City Stock Yards Company, to have the total amount in the hands of the receiver, all of which, as already stated (with the exception of $10), had been derived from assessments on stockholders, applied to the payment of intervener's preferred claim. This application was resisted by the receiver, and also by general creditors, on the ground that the fund derived from the assessment on stockholders, which was made under chapter 208 of Acts of the 18th General Assembly, now embodied in its substantial provisions in Code, §§ 1882, 1883, was not applicable to the payment of preferred claims. But the court refused this application, and ordered the amount in the hands of the receiver, so far as it was derived from the assessment on stockholders, to be applied pro rata to the claims of all the creditors of the bank, including the claim of intervener, after deducting the entire expense of the receivership, and it is from this order that the intervener appeals.

As a general proposition, the contention of the receiver and the general creditors as against the claim of intervener to a preference in the distribution of the proceeds of the assessments on stockholders would seem to be sound. A creditor who is given a preference in the distribution of the assets of a bank, on the ground that the fund which he claims as a trust fund was wrongfully received by the officers of the bank, and should be returned to him before the assets are used in the payment of general creditors, is given such preference because the trust fund has swelled the general assets, and the creditors of the bank will not be deprived of anything to which they are entitled, if, to the extent to which the general assets have been increased by including the trust fund, they are in turn diminished by the return of such fund to the beneficiary entitled thereto. But where the trust fund has been diverted or squandered, and the assets have not been in any way derived from or swelled by it, then a beneficiary is in no situation to ask that the funds of the bank be diverted from the payment of general creditors and applied to the return of the trust fund. Jones v. Chesebrough, 105 Iowa, 303, 75 N. W. 97; Bradley v. Chesebrough, 111 Iowa, 126, 82 N. W. 472.

Whether the beneficiary of a trust fund wrongfully received by the bank could, as a creditor, compel an assessment on stockholders under the double liability act, for the purpose of raising money to pay off his claim, is not a question which we now have before us. The trial court put the intervener on the same basis as other creditors as to distribution of the proceeds of the stockholders' double liability, and its action in doing so is not questioned. But the point we are now considering is whether the preferred creditor is entitled to a preference in the distribution of such proceeds, and we are clearly of the opinion that he is not entitled to any such preference. His preference is as to the assets of the bank which have been swelled by the trust fund; but, those assets having disappeared or been distributed, it cannot be claimed that the assets derived from the assessment on stockholders have in any way been augmented by the trust fund, and therefore it certainly is not subject to diminution in the interest of a preferred creditor. Moreover, the provisions of the statute are specific that the fund derived from the assessment of stockholders "shall be distributed equally among all the creditors of such corporation in proportion to the amount due to each." See Acts 18th Gen. Assem. p. 206, c. 208, § 2. Code, § 1883, contains substantially the same provision. Nor is there anything in the order of the court of July 18, 1898, establishing intervener's claim as a preferred claim, inconsistent with this conclusion; for in that order it is provided that the receiver shall pay intervener's claim "out of any funds of said estate remaining in his hands and applicable thereto." If the proceeds of the assessment on stockholders is not applicable to the payment of preferred claims, then the order of court did not direct the application of the proceeds of such assessment to the satisfaction of such preferred claim, to the exclusion of the claims of other creditors. Unless, therefore, there are some other facts in this case which should influence a court of equity in regard to the distribution of the fund in the hands of the receiver, the order of the lower court denying intervener's application to preference as to such funds is correct.

If, however, prior to the order establishing intervener's claim as entitled to preference, assets of the bank which should have been applied to the satisfaction of intervener's preferred claim had been distributed to general creditors, then undoubtedly to that extent the proceeds of the stockholders' double liability, which would otherwise be distributed to general creditors, might be now applied to the satisfaction of intervener's preferred claim, for no ultimate injustice would thereby be done to the general creditors. They would

Digitized by Google

receive in the aggregate what they were entitled to, and the equity of the intervener would be protected. Standard Oil Co. v. Hawkins, 74 Fed. 395, 20 C. C. A. 468, 33 L. R. A. 739.

Moreover, if general assets of the bank were used in the satisfaction of other preferred claims which should have been applied pro rata on the claims of such preferred creditors and intervener, then, to the extent to which such other preferred creditors may still be entitled, if at all, to share as general creditors in the proceeds of the stockholders' double liability, the amount coming to such other preferred creditors might no doubt be used for the purpose of equalizing payments as between such other preferred creditors and the intervener. The difficulty in applying any such rules of distribution in this case seems to be that the general assets of the bank, so far as they were used in the extinguishment of the claims of creditors, were entirely exhausted in the payment of preferred claims established before that of the intervener was recognized as entitled to preference, and that such other preferred claims have, as we understand the record, been fully paid, so that the other preferred creditors now have no claim as general creditors to participate in the distribution of the proceeds derived from the assessment on stockholders under their double liability.

But the final and substantial claim of counsel for intervener is that a considerable portion of the amount of the general assets of the bank, which would have been applicable to the payment of intervener's preferred claim, was used in the expenses of the administration of the receivership, that these expenses have been incurred very largely in the collection of the assessment on stockholders on account of their double liability, and that to the extent to which the general assets applicable to the payment of intervener's preferred claim have been used in the collection of the assessment on stockholders the proceeds of the stockholders' double liability should be now applied to the satisfaction of intervener's claim in preference to the claims of general creditors. This contention we think to be sound and in accordance with equitable principles. The difficulty is that we have no means on this record of determining to what extent the expenses of the administration of the receivership, so far as they have already been allowed and paid out of the general assets, have been occasioned by the collection of the stockholders' assessment. We think it clearly appears, however, that some considerable portion of the expenses of administration incurred in the collection of the assessment on stockholders has been included in the expenses of the receivership allowed out of the general assets. It appears that out of $26,585.17 derived from various sources as general assets of the bank the sum of $11,249.60 has been paid out to preferred creditors, and the balance has been entirely exhausted (save $10 of that fund, now in the hands of the receiver) in the expenses of administration. On the other hand, out of $26,019.03 derived from assessments on the stockholders the sum of $4,280.95 has been used in the payment of preferred claims (other than the claim of intervener, on which no payment has been made). A balance of $5,673.65 remained in the hands of the receiver, the whole fund, with this exception, having been exhausted in the payment of expenses of administration. In other words, out of the total of $52,604.20 which has come into the hands of the receiver over $30,000 has been expended in administration of the receivership, and something over $20,000 has been paid out to creditors, or is still on hand to be used for that purpose. We, of course, have nothing in the record to directly indicate that the expenditure of three-fifths of the estate in carrying on the receivership, and two-fifths in the payment of claims, is extravagant; but we think it may be fairly surmised, at any rate, that some portion of the expenses paid out of the general assets has been made necessary by the proceedings to enforce liability of stockholders. If the trial court had required the receiver to distinguish in his report between expenses thus incurred and those which would have been necessary in the distribution of the general assets, without resorting to an assessment on the stockholders, it might have been shown that a considerable amount of the receivership expenses paid out of the general assets had been incurred in the enforcement of the assessment. Such a finding by the trial court, though not specifically asked by the intervener, would have been within the equitable relief which he sought, and we think the trial court should have given him the benefit thereof. We have no means of knowing whether such equitable considerations were brought to the attention of the trial court, and urged on the hearing; but, if the intervener was entitled to this relief, we see no reason why he should not have it, either in this court or in the lower court. As we have not the means, however, of apportioning the expenses of administration between the two funds, we shall remand the case to the lower court, with direction that the amount of general assets used in expenses of administration incurred in collecting the stockholders' liability be ascertained, and that to a corresponding amount the proceeds of the stockholders' assessment, now in the hands of the receiver, or hereafter derived by him from that source, be applied to the satisfaction of intervener's preferred claim, and the order of the lower court appealed from is reversed.

Digitized by Google

BURROUGHS v. BUTLER-RYAN CO.

(Supreme Court of Iowa. Oct. 12, 1903.)

CHATTEL MORTGAGES—SALE OF PROPERTY—CONVERSION — CONSENT BY MORTGAGEE — QUESTION FOR JURY — CONTRACTS — EVIDENCE.

1. Where a mortgage on certain brick provided that they might be sold by the mortgagor with the mortgagee's consent, and that the mortgagee should collect the price of brick so sold, and there was evidence from which the mortgagee's consent to a sale to defendants might be inferred, it was error for the court, in an action against defendants for conversion of the brick sold, not to submit such question to the jury, but to charge that there was a conversion as a matter of law.

2. Where a contract for the sale of brick by the mortgagor to defendant was signed by the mortgagor, and was proved to contain the agreements under which the brick were furnished, and contained a guaranty by the mortgagee of the performance of the contract, it was admissible to show the mortgagee's knowledge of the disposition the mortgagor was making of the brick, though it was signed only by the mortgagor.

3. Where a chattel mortgagee consented to the sale of a part of the mortgaged property by the mortgagor, such consent would not render such mortgagee liable for breach of the mortgagor's contract.

Appeal from District Court, Cherokee County; William Hutchinson, Judge.

Action at law to recover the value of brick sold to the defendant by one J. M. Starbuck. Starbuck manufactured the brick in question, and, in advance thereof, borrowed money of the plaintiff, and executed to him a mortgage thereon as security for his loans. The mortgage gave the plaintiff the right to sell the brick so manufactured, and provided that no sale should be made by Starbuck without the consent of the plaintiff; and, further, that the plaintiff should have the right to collect all accounts due for sales made by either party. Starbuck contracted with the defendant to furnish it a large quantity of brick at an agreed price. He furnished a part thereof, but failed to fully perform his contract. The plaintiff sued for the value of the brick so furnished to the defendant, alleging his lien thereon, and a conversion by the defendant. There was a trial to a jury, and a verdict and judgment for the plaintiff. The defendant appeals. Reversed.

William Mulvaney and How & Butler, for appellant. E. C. Herrick, for appellee.

SHERWIN, J. The plaintiff's claim is based upon an alleged conversion of property upon which he held a lien by virtue of a chattel mortgage, and such was the theory of the trial in the district court. It is elementary that there is no conversion of property where it has been acquired and used with the consent of the owner or pledgee. The brick in controversy were undoubtedly covered by the plaintiff's mortgage, but the mortgage itself, by implication at least, provided that they might be sold by Starbuck with the consent of the plaintiff; and, if he did in fact give his consent to their sale to the defendant, there was no conversion, and an action therefor could not be maintained upon the theory presented by the pleadings and upon which the case was tried. The question of plaintiff's consent to the sale was a material one, and the court should have instructed the jury thereon, instead of instructing as a matter of law that there was a conversion. It is true that forms of action have been abolished by statutory enactment, but this does not aid the plaintiff in his contention that he was entitled to recover at any rate, or under a different theory. The defendant was entitled to instructions correctly covering the theory of the case presented by the pleadings and the evidence, and upon which it was tried, and, if the court failed to so instruct, it is reversible error.

The contract drawn for the signature of Starbuck and the defendant should have been admitted in evidence. It was signed by Starbuck, and, while not signed by the defendant, the testimony clearly shows that it in fact contained the agreements under which the brick were furnished by Starbuck to the defendant, and it was competent for the purpose of showing the plaintiff's knowledge of what Starbuck was proposing to do with the brick manufactured by him, and as tending to show the plaintiff's consent to the sale, and the terms thereof. If the plaintiff consented to a sale under an express contract providing for the payment of damages by Starbuck in case he failed to perform, it is clear that he cannot now recover the contract price of the brick regardless of the damages suffered by the defendant by reason of Starbuck's failure. The mere fact that the plaintiff consented to the sale of the brick to the defendant would not, in our judgment, render him liable for the breach of Starbuck's contract, and the record contains no evidence which would warrant a finding that he is so liable. Nor is there evidence to sustain the contention that the contract between the plaintiff and Starbuck created the relation of principal and agent, instead of that of mortgagor and mortgagee. Hence we conclude that the liability of the plaintiff under the defendant's contract with Starbuck was properly withdrawn from the consideration of the jury.

What has already been said disposes of the plaintiff's appeal from the order denying his motion for a judgment for a sum in excess of the verdict.

For the reasons stated, the judgment is reversed on the defendant's appeal. Reversed.

Digitized by Google

MALLEY v. MALLEY.

(Supreme Court of Iowa. Oct. 12, 1903.)

TRUSTS—PURCHASE OF LAND—IMPLIED TRUST —TITLE IN THIRD PERSON—EVIDENCE.

1. Where a legal title has stood unquestioned for many years in the name of a certain person, more than a slight preponderance of evidence is necessary to establish a trust in some one else.

2. The lands of a brother and sister, which were impressed with a life estate in favor of their mother, were sold by those interested, and shortly after other lands were purchased, a certain tract being taken in the name of the mother and other similar ones by the brother and sister, and after the mother's death the brother, in an action to quiet title, claimed that he had furnished half the consideration for the purchase of the tract taken in the name of the mother. It appeared that the mother had lived on her tract for 32 years, controlling it as her own, and putting on improvements at an expense of $2,000, during which time plaintiff never asserted ownership or sought to establish any trust. *Held*, that the circumstances were entirely consistent with the theory that there was a loan to the mother, and inconsistent with a trust in favor of the son.

Appeal from District Court, Polk County; A. H. McVey, Judge.

Action to establish and quiet plaintiff's title to an undivided seven-tenths of an 80-acre tract of land in Polk county, Iowa, and for a partition accordingly. The district court denied the relief asked, and plaintiff appeals. Affirmed.

E. P. Hudson and W. D. Evans, for appellant. Brennan & Brennan, for appellee.

WEAVER, J. In the year 1864, Francis Malley and Catherine Elizabeth Malley, his wife, being about to separate, they united in conveying certain lands in severalty to their children Fred H. Malley (plaintiff herein), Mary Malley, William Edwin Malley, John Malley, and Paul F. Malley, defendant herein. Another child, Louisa Schlenker, appears to have been previously provided for. The conveyances to plaintiff and to his sister Mary were made subject to a life estate in their mother, Catherine, and the conveyances to William Edwin, John, and Paul were made subject to a life estate in their father, Francis Malley. In the year 1865 plaintiff, with his sister and mother, made sale and conveyance of the lands thus obtained by them to one Troeger. The price received for said lands and the manner of its division between the grantors is a matter of dispute. Soon after this transaction the parties moved to Polk county, where some 408 acres of land, consisting of 320 acres of farm land and 88 acres of timber, were purchased. The title to one 80-acre tract of farm land (being the tract now in controversy), costing $1,200, and 22 acres of timber, costing $325, was taken in the name of the mother, and the title to other similar tracts was taken by plaintiff, his sister Mary, and Mrs. Schlenker in severalty. The mother, with her younger children, John, William E., and Paul F., took up her home on the land conveyed to her, and occupied it until the year 1898, when she died testate, devising her entire estate to Paul F., subject to the payment by him of the sum of $600 to the plaintiff and the further sum of $1,500 to William E. Malley. The son John Malley died intestate in 1871, unmarried, and without children. Mary Malley, then Liebenstine, a widow, and without children, died testate in 1873, devising to her brothers and sisters, including plaintiff, by specific description, the 102 acres of land to which she held the title, and making no mention or claim of any interest in the land held by her mother. Thus far there is little or no dispute in the record. Plaintiff's claim is to the effect that he negotiated the purchase of the lands in Polk county, and that the $1,200 paid for the 80-acre tract conveyed to his mother was furnished one-half by himself and one-half by his sister Mary, and that his mother contributed nothing whatever to said purchase except the sum of $325, paid for the 22 acres of timber land. This, he claims, is the voluntary act of his sister and himself, without any agreement with or request from their mother, and for the purpose of securing to her the use and benefit of the property for life, and with no intent or purpose of vesting her with the absolute ownership of the fee. He asserts, therefore, that, save as to her life estate, Catherine Elizabeth Malley held the title to said land in trust for the joint benefit of his sister Mary and himself, and, the life estate having lapsed, he is entitled to be declared the undisputed owner of the undivided one-half of the property. In his original petition plaintiff alleged that by the will of his deceased sister, Mary, he became the owner of one-fifth part of the other undivided one-half of the land; but this claim he afterward abandoned, and in argument advances the proposition that, while Mary was the equitable owner of the undivided one-half of the land, the same was not devised by her will, and passed as intestate property to her mother, through whose will it passed to the defendant.

The testimony makes it reasonably certain that plaintiff advanced or paid the sum of $600 upon the purchase price of the land, but it is by no means so clear that the transaction was of a nature to create a resulting trust in his favor. The general proposition that where one purchases and pays for land, taking the title in the name of a third person, the grantee is deemed to hold such title in trust for the real purchaser, is well settled. Cotton v. Wood, 25 Iowa, 43; Zunkel v. Colson, 109 Iowa, 695, 81 N. W. 175; Williams v. Williams, 108 Iowa, 91, 78 N. W. 792. But the presumption in favor of the legal title, especially one which has stood unquestioned and undisturbed for many years, is so nearly conclusive that something more than a slight preponderance of the testimony is required to establish a trust. We have said: "It is well settled that one who asks to establish

Digitized by Google

a resulting trust by parol evidence, and ingraft the same on the legal title, must do so by evidence that is clear, certain, and practically overwhelming." Andrews v. Andrews, 114 Iowa, 524, 87 N. W. 494; Murphy v. Hanscome, 76 Iowa, 192, 40 N. W. 717; Sunderland v. Sunderland, 19 Iowa, 325. It follows, therefore, if the testimony, when fairly construed, is consistent with any reasonable theory which will allow the legal title to stand, no trust will be declared. Without extending this opinion to include a minute review of the record, we have to say that, assuming it to be proven that plaintiff supplied $600 of the purchase price of the land, the testimony as a whole, and the conceded circumstances surrounding the parties, are, to our minds, entirely consistent with the theory that the transaction was in the nature of a loan or accommodation to his mother, to be repaid or returned by her at some later date, when she should be able to do so. The conduct of the mother indicates that such was her understanding of the matter. For 32 years she lived upon, managed, and controlled the property as her own, and placed improvements thereon at an expense of $2,000 or more. During all that long period, so far as appears, plaintiff never asserted his ownership, or sought to have the alleged trust legally established. If it was the plaintiff's purpose to invest his mother with a life estate only, there was no necessity, nor is any adequate reason suggested, for making her a trustee of the fee. Indeed, it is not easy to imagine a state of circumstances under which the grantee of the legal title to land may be held to be a life tenant only, and at the same time be chargeable with a resulting trust in the fee for the benefit of the remainderman. But, conceding that such an incongruous union of estates in the same person is possible, the evidence is not sufficiently strong or convincing to require such a finding in the case here presented.

The judgment of the district court is affirmed.

FLEMING et al. v. HAGER.

(Supreme Court of Iowa. Oct. 10, 1903.)

PROCESS — MORTGAGE FORECLOSURE — PUBLISHED NOTICE—DEFECTS—IMMATERIAL DEFECT—PREJUDICE—EVIDENCE.

1. Under Code 1873, § 2599, providing that the original notice by which an action is to be commenced must state "in general terms the cause or causes thereof," in an action to foreclose a mortgage it is not necessary to describe the land covered by the mortgage, nor to make reference to the book or page where the record of the mortgage may be found.

2. One to whom mortgaged land descends must be held to have knowledge of the terms and conditions of the mortgage.

3. Code 1873, § 2599, enacts that the original notice by which an action is commenced must state "in general terms the cause or causes thereof." In a suit to foreclose a mortgage the published notice of the action gave the page of the record where the mortgage was recorded as 58, instead of 458, and in describing the land gave the range as 36, instead of 30. The lands involved had descended to certain persons, and, after they had become possessed thereof, one of the heirs, acting in his own behalf and for the others as guardian and administrator, procured an extension of time to pay the interest on the mortgage. The notice correctly gave the names of the parties and the amount of the mortgage, and described the land as in the county where it was actually situated. No payments were made on the mortgage or taxes paid on the lands by the heirs. *Held*, that the mistakes in the notice, in regard to matters which it had not been necessary to insert, could not have misled or prejudiced defendants, and hence the notice was sufficient.

Appeal from District Court, Adair County; J. D. Gamble, Judge.

Action in equity to set aside a default decree. There was a demurrer to the petition, which was sustained. The facts appearing from the petition are that on and prior to December 7, 1886, Hannah Fleming was the owner of the south half of the southwest quarter of section 33, township 76, range 30, Adair county. On the date mentioned she executed and delivered to the Sullivan Savings Institution, of New Hampshire, a mortgage on said lands to secure the payment of one note for $1,000, due in five years, with interest at 8 per cent. Said mortgage was duly filed for record in the office of the recorder of Adair county, and recorded in Book 45, page 458. Thereafter, and in November, 1888, said Hannah Fleming sold and conveyed said lands to Sarah E. Fleming. In the deed it is recited that the lands are "free and clear of all liens and incumbrances whatsoever, except a mortgage of $1,000." Sarah E. Fleming died intestate in January, 1890, leaving surviving her J. B. Fleming, her husband, and Gertie, John, and Bertha Fleming, minor children of herself and her husband. J. B. Fleming was appointed administrator of her estate and guardian of said minor heirs. In October, 1894, said mortgage indebtedness not having been paid, foreclosure proceedings were commenced in the Adair district court. In that action J. B. Fleming, Gertie, John, and Bertha Fleming, J. B. Fleming administrator, and J. B. Fleming guardian, are made parties defendant. In the foreclosure petition, which is set forth at length in the petition in the present action, it is alleged simply that whatever interest said defendants, or any of them, have in said lands, the same is inferior to the lien of said mortgage, and it is the prayer that their equity of redemption be cut off. In a paragraph of said petition it is also alleged that in 1892 the defendant J. B. Fleming, in writing, agreed to pay the interest on said mortgage indebtedness in consideration of an extension of time of payment. From the copy of such writing, which is set forth, it appears to have been the agreement that a failure to make payment of interest should result in the right to proceed to foreclose

¶ 1. See Mortgages, vol. 35, Cent. Dig. § 1298.

Digitized by Google

the mortgage for the full amount of the debt, interest, etc. A failure to pay interest is then alleged, and judgment is demanded for $1,000, interest, and costs. Service of notice of said action was sought to be made by publication. The notice as published is set forth, and it appears addressed to J. B. Fleming, said minors, naming them, J. B. Fleming as administrator and as guardian. The notice is in the usual form, the statement made in the body thereof being as follows: "Asking judgment against you for the sum of $1,000 and interest, and the foreclosure of a mortgage recorded in the office of the recorder of Adair county, Iowa, in Book 45, at page 58. on the south half of the southwest quarter of section 33, township 76, range 36, in said county." No appearance was made to said action, and there was a default as against J. B. Fleming personally and as administrator and guardian. A guardian ad litem was appointed for said minors, and an answer filed. No personal judgment was rendered, but foreclosure with special execution was ordered as prayed. It is further made to appear that execution sale was had, followed by a sheriff's deed of date February 19, 1896, to the defendant in this action; that this defendant has ever since been in possession of the lands thereunder, has paid the taxes thereon, etc. This action is brought by said J. B. Fleming for himself and as guardian and administrator, and by said minor heirs, the petition being filed in May, 1901, to have said decree and the sheriff's deed set aside and canceled, and that they may be allowed to pay off said mortgage debt after deducting therefrom the value of the accrued rents and profits. The ruling on the demurrer to the petition having been made, plaintiffs elected to stand on their petition, and refused to plead over. Judgment was thereupon rendered dismissing the petition, and for costs. Plaintiffs appeal. Affirmed.

Geo. D. Musmaker and D. W. Church, for appellants. J. N. Haddock and Hinkson & Brown, for appellee.

BISHOP, C. J. Appellants have assigned errors predicated upon the ruling on the demurrer. In argument it is their sole contention that the decree rendered must be held void, and should be set aside, for that there was no notice of the action as by law required. The criticism of the notice published as alleged is addressed to the fact that the page of the record is given as 58, instead of 458, and in the description of the lands the range is given as 36, instead of 30. It is conceded that range 30 of townships does not extend through Adair county, but through the adjoining county of Cass on the west. Section 2599 of the Code of 1873, in force at the time, provided that the original notice by which an action is to be commenced must state "in general terms the cause or causes thereof," etc. What is meant by the language employed by the statute is that the defendant shall be advised with reasonable certainty of the nature of the claim made against him by plaintiff. Harkins v. Edwards, 1 Iowa, 296; Jordan v. Woodin, 93 Iowa, 453, 61 N. W. 948. In an action to foreclose a mortgage it is not necessary to describe the land covered by the mortgage. Van Sickles v. Town, 53 Iowa, 259, 5 N. W. 148; Lindsey v. Delano, 78 Iowa, 350, 43 N. W. 218. Nor is there any reason, in our view, for making reference to the book and page where the record of the mortgage may be found. It will be observed that the notice here in question states in general terms that the action is for the foreclosure of a mortgage, and counsel for appellants concede, in effect, that the notice would have been sufficient had all reference to the record of the mortgage and the description of the land been omitted. We have, then, a notice which complies with the statute as to form and substance, and is therefore sufficient to confer jurisdiction upon the court, unless it shall be said that by reason of errors appearing in the statement of nonessential facts, the notice lost all force, and gave the court no authority to proceed to enter default or render a decree. Manifestly, it is not a case of no notice that we are called upon to consider. It cannot be said there is no notice, unless a notice has not in fact been served, or, if one has been served, that the same does not comply with the essential requirements of the statute as to form and substance. We may assume also that a notice which fails to state correctly the character of the cause of action should be regarded as no notice at all, inasmuch as it would be insufficient to give the court jurisdiction to render judgment upon a cause of action not referred to. Thus notice of an action upon a promissory note would not warrant a judgment for damages upon a cause of action sounding in tort, or authorize a decree quieting title to real estate. Nor is it quite accurate to say that the notice in question is a defective notice in the sense in which we are accustomed to use that expression. It correctly names the forum and the parties. It correctly designates the place where the court is to be held, and the time when the defendants are required to appear. It correctly states the subject-matter of the action, and, if served in connection with an action brought to foreclose a mortgage upon property in fact as therein described, and which mortgage was recorded as therein stated, it would undoubtedly be sufficient to confer jurisdiction to enter a default and decree. The notice being otherwise sufficient, the simple question, therefore, is, must it be said that the inaccuracy in the statement of facts not necessary to be stated is sufficient to avoid the notice as a whole. We think the answer to this question must depend upon whether prejudice has resulted

Digitized by Google

from the inaccuracy alleged, so far as that the defendants were thereby led away from entering their appearance in the action and making defense. This is the rule which obtains in all cases of defective notices, where the defect complained of is not of itself vital in character. And we see no reason why the principle there then applied is not applicable to cases such as the one before us. Such, clearly, is the thought upon which the decision in Lindsey v. Delano, supra, is based. That also was an action brought to set aside a default foreclosure decree upon the ground that in the original notice the land covered by the mortgage was erroneously described. In the course of the opinion it is said: "It is claimed that this decree is void * * * because the original notice * * * described the land in controversy as in township 92, instead of township 91, and as being in Stanton township, when it was in fact situated in another civil township. The objection is without merit. The land is otherwise sufficiently identified. It is described as the land known as the 'George Gray land,' and upon which Lindsey had a lien. It was not required that the land should be described in the notice. There is no pretense that Lindsey was misled by this notice. He had but one mortgage made by George Gray, and knew the location of the land. He was advised by the notice that Rogers claimed the superior lien." Counsel for appellants seem to think there should be a distinction drawn between cases where service of the notice is had by publication and those in which the service is personal, and this is undoubtedly true as having respect to some matters. Thus a party upon whom service is personally made may be held in reason to know that he is the person intended to be sued, even though there is an inaccuracy in the spelling of his name, or in the giving of his initials; whereas the contrary might be true if the notice was a published one. This is the holding in Fanning v. Krapfl, 61 Iowa, 419, 14 N. W. 727, 16 N. W. 293. But there is no good reason for saying that, in respect of the character or nature of the action stated, there should be any distinction drawn on account of the method which has obtained in making service, and no case has been called to our attention which so holds. Counsel for appellant cite and rely upon Frazier v. Steenrod, 7 Iowa, 340, 71 Am. Dec. 447. We do not think the case is in point. There a guardian made application to the court for leave to sell certain described real estate belonging to his ward. In the notice of the application served upon his ward he described real estate other than that described in the application. It was properly held that the notice was wholly insufficient to authorize a sale of lands not described therein.

We may now turn to the record before us, and therefrom ascertain if the facts and circumstances described by the petition are sufficient to make out a case of prejudice. It will be observed that plaintiffs came to their title in the lands through the death and intestacy of the wife and mother. The mortgage was there then resting upon such lands, and the same was properly a matter of record. Not only did they take title subject to the lien of the mortgage, but they must be held to a knowledge of its terms and conditions. Moreover, it is affirmatively alleged by them that after they became possessed of the title to the lands the plaintiff J. B. Fleming, acting, we may presume, on his own behalf and in the interests of the estate of his wife and of his wards, went to the mortgagee, and procured an extension of time, binding himself personally to pay the interest on the mortgage indebtedness in consideration of such extension. Plaintiffs knew, of course, that the interest was not paid, and that foreclosure proceedings would probably follow as a result thereof. Now, the notice apprised them that they were being sued by the party holding the mortgage on their lands on account of a mortgage indebtedness identical in amount with that for which their lands were holden, and that a decree of foreclosure was prayed for. In the notice the lands described are said to be in Adair county, and the suit was brought in Adair county; and, had such notice actually come into the hands of plaintiffs, they must have known that the statement of the range number as being 36 was an error. Now, no appearance was made, and, not only is this true, but for a period of over six years they gave no attention whatever to the matter of the indebtedness to which they held subject by making payments of any portion of the principal or interest. They gave no attention to the land itself by asserting a right of possession thereof or by paying taxes thereon. In the absence of any showing to the contrary, we think it not unreasonable to conclude that plaintiffs were satisfied to let the lands be taken to pay the indebtedness, and that, instead of their being misled by the errors in the notice, the present action is the result of afterthought, inspired by a probable increase in value of the lands and by improvements which have been made thereon.

It follows from what we have said that the decree appealed from was warranted, and it is affirmed.

CEMANSKY v. FITCH.

(Supreme Court of Iowa. Oct. 10, 1903.)

VENDOR AND PURCHASER — COVENANT AGAINST LIENS—COVENANT AGAINST INCUMBRANCES—SPECIAL ASSESSMENTS—STATUTES.

1. Special assessments do not become liens save as made so by statutory authority.

2. Code, § 816, enacts that after a contract has been made by a city for a street improvement, the clerk shall file with the county auditor a copy of the notice of the resolution provided for, with a copy of publication thereof, together with a certificate of the clerk that an

Digitized by Google

rdinance or resolution has directed the improvement, whereupon all special taxes for the mprovement shall become a lien from the date f the filing of such papers. *Held*, that the ien for the assessment attaches, by virtue of he statute, at the time that the papers menioned are filed, though the work has been reviously completed.

3. A covenant in a deed against incumbrances oes not include a charge for a street improvenent which has been made, though the lien hereof has not attached.

4. A covenant in a deed against "liens and ncumbrances" is a covenant "in præsenti," nd does not relate to those which may therefter attach.

5. Where a deed contains a covenant to deend against all "lawful claims," the phrase 'lawful claims" does not include an assessment or a street improvement which has been made, ut the lien of which has not attached.

Appeal from District Court, Woodbury ounty; William Hutchinson, Judge.

Action for damages resulting from an aleged breach of the covenants contained in a arranty deed. From judgment against im, the defendant appeals. Reversed.

Hubbard & Burgess, for appellant. Shull & Farnsworth, for appellee.

LADD, J. The defendant was owner of ot 9 of block 7 in Sioux City, and on the 2d day of January, 1900, conveyed it to the laintiff by warranty deed, covenanting perect title, "free and clear of all liens and inumbrances," and "to warrant and defend the itle to said premises against the lawful laims of all persons whomsoever." Prior hereto, in September, 1899, the city council ad ordered the construction of a cement idewalk in front of the lot, and, as the ownr did not build it, had caused it to be contructed in November of that year. In Auust following, the council assessed the cost gainst the lot, and a transcript of the entire roceedings, duly certified by the city clerk, vas filed with the county auditor. Such ost was duly entered on the books of the uditor and treasurer as a tax against the remises. The defendant having refused to atisfy the same, the plaintiff paid the mount assessed, being $98.38, including inerest and penalties. The defendant deurred to a petition stating these facts. The ourt held that they established a breach of he covenants contained in the deed, and rendered judgment accordingly.

It is to be noted that the sidewalk had een constructed about two months before he execution of the deed, but that the certied transcript of the proceedings was not led until about seven months afterwards. The regularity of the proceedings is not uestioned, and the sole issue to be deterained is whether liability for the cost of the mprovement attached to the lot prior to the xecution of the deed. Special assessments o not become liens save as so made by statory authority. Eagle Mfg. Co. v. City of Davenport, 101 Iowa, 493, 70 N. W. 707, 38 L. R. A. 480. Formerly they became such when the work began. To obviate the difficulty of determining by parol evidence precisely when this happened, and in order to indicate the attachment by an appropriate record, section 816 of the Code was enacted, pointing out how and when the cost of such an improvement might be made a lien on the abutting property: "After a contract has been made by any city for the making or reconstruction of any street improvement or sewer, the clerk shall file with the auditor of the county, or each of the counties, in which said city is situated, a written or printed copy of the notice of the resolution provided for, with a true copy of the proof of publication thereof, together with a certificate of the clerk that an ordinance or resolution has been adopted directing the making or reconstruction of said street improvement or sewer. Thereupon all special taxes for the cost thereof, or any part of said cost, which are to be assessed or levied against real property, or any railway or street railway, together with all interest and penalties on all of said assessments, shall become and remain a lien on such property from the date of the filing of said papers with the county auditor until paid, and shall have precedence over all other liens except ordinary taxes, which shall not be divested by any judicial sale; but such liens for street improvements in case of abutting property shall not cover to exceed one hundred and fifty feet in depth from the abutting line. Any such assessment against a railway or street railway shall be a first and paramount lien upon track thereof within the limits of the city." Doubtless, if the improvement were never actually made, the proposed lien would fail, but if, after being contracted for, the work is completed, it will attach, and relate to the date of filing with the county auditor of a copy of the notice of the resolution "of the city council, with a true copy of the proof of publication of notice thereof," and a certificate of the clerk that a resolution or ordinance was adopted directing the improvement. In other words, upon proof of record in the auditor's office that everything preliminary to the actual construction of a sidewalk has been done in conformity to law, the lien for the cost immediately attaches, and it does not attach until then, even though the walk may have been built long before. Why? Because the statute so provides, and it is conclusive. By fixing the time, it impliedly declares the lien does not previously attach. The council did not assess the cost of this walk until August 17, 1900, and the certificates were not filed until September 22d following. Nothing had been done before the execution of the deed to make the claim against, or a lien or incumbrance upon, the lot, and the terms of the statute exclude the idea that the lien could then have existed. Cadmus v. Fagan (N. J. Err. & App.) 4 Atl. 325; Eagle Mfg. Co. v. City of Davenport, supra. Surely

¶ 3. See Covenants, vol. 14, Cent. Dig. §§ 119, 120.

Digitized by Google

prior to assessment by the city council it was not a tax against the land, and, if not, then it could not amount to an incumbrance thereon. Ingalls v. Cooke, 21 Iowa, 560. But the statute fixes the filing of proper proof with the auditor, rather than making of the assessment, as the time the lien shall attach, and prior thereto it did not constitute an incumbrance such as contemplated by the covenants contained in the deed. Tull v. Royston, 30 Kan. 617, 2 Pac. 866; Eagle Mfg. Co. v. City of Davenport, supra. See Harper v. Dowdney (N. Y.) 21 N. E. 63; 8 Am. & Eng. Ency. of Law, 127.

But appellee argues that the right to have the cost of the sidewalk established as a lien was an incumbrance, or, at least, a "lawful claim," against the property. An incumbrance is "any right to, or interest in, land which may subsist in third persons to the diminution in value of the land, though consistent with the passing of the fee by a deed of conveyance." But a mere possibility of establishing a right to, or interest in, land is not within this definition. The covenant against liens and incumbrances is a covenant in præsenti, and does not relate to those which may thereafter attach. If broken at all, it is broken when the conveyance is executed. Ingalls v. Cooke, 21 Iowa, 560; Barlow v. Bank, 63 N. Y. 399, 20 Am. Rep. 547. That an assessment may be levied and an incumbrance subsequently created by following the statutory provisions does not amount to a present incumbrance. Cadmus v. Fagan, supra.

Appellee further argues that the cost was at least a claim against the property, and therefore within "the covenant to warrant and defend the title to the said premises against the lawful claims of all persons whomsoever." But the "lawful claims" contemplated are those to the title conveyed, and not to mere charges, which may or may not be established as liens thereon. Jones on Real Property, §§ 892, 893; Meservey v. Snell, 94 Iowa, 222, 62 N. W. 767, 58 Am. St. Rep. 391; Leddy v. Enos, 6 Wash. 247, 33 Pac. 508, 34 Pac. 665; Zabriskie v. Baudendistel (N. J. Ch.) 20 Atl. 163.

One of the objects of the Legislature in defining precisely when the lien for street improvements attach to the abutting property must have been the determination of the liability therefor as between grantor and grantee in such a deed, and we perceive no reason for not giving the statute full effect.

Reversed.

BRESCHEMIER et al. v. HOUSTON et al.

(Supreme Court of Iowa. Oct. 10, 1903.)

FRAUDULENT CONVEYANCES—EVIDENCE—TRUSTS.

1. Defendant's mother, who had been gratuitously supported by defendant and her husband for several years, without any demand or expectation of compensation, conveyed to defendant certain real estate in consideration of one dollar "and other sufficient considerations." Both defendant and her husband had been insolvent for several years, but were engaged in business which was transacted first in the name of one and then in the name of the other. The husband had been discharged as a bankrupt, and a few days thereafter defendant transferred the property to him, and shortly thereafter herself applied for a discharge in bankruptcy. *Held*, that the conveyance by defendant to her husband was fraudulent as to her creditors, and was not in execution of a trust to convey the property to the husband in satisfaction of the expenses incurred in caring for defendant's mother.

Appeal from District Court, Cass County; N. W. Macy, Judge.

This action was commenced by the firm of Officer & Pusey to recover judgment upon a promissory note executed by the defendants, who are husband and wife, jointly. The defendant W. W. Houston appeared, and pleaded a discharge in bankruptcy. On trial judgment was rendered in favor of said plaintiffs against the defendant L. F. Houston for the amount due on said note and for costs of suit. The defendant W. W. Houston obtained a judgment in his favor for costs. Thereafter said plaintiffs filed a supplemental petition setting forth that while indebted to plaintiffs on said note, and before the date of said judgment, the defendant L. F. Houston, being the owner of lot 1 and the north half of lot 2, block 132, Atlantic, Iowa, conveyed the same to her husband and codefendant, W. W. Houston; that at the time of said conveyance said L. F. Houston was largely indebted and insolvent; that said conveyance was without consideration, and was made with intent on the part of both defendants to delay and defraud her creditors, among whom were plaintiffs. The prayer is that said conveyance be set aside, and that said real estate be subjected to the payment of plaintiffs' judgment. The defendants answered, denying want of consideration, and denying the fraud alleged; pleading that at the time of said conveyance only the legal title to the property was vested in L. F. Houston, the defendant W. W. Houston being the beneficial owner thereof; and that the execution of said conveyance was simply the execution of the trust with which she had theretofore been charged. Before trial the plaintiffs Officer & Pusey became insolvent, and the present plaintiffs, receivers of said firm, were substituted in their stead. The cause was tried as in equity, and there was a decree in favor of plaintiffs as prayed. The defendants appeal. Affirmed.

De Lano & Meredith and N. T. Guernsey, for appellants. Willard & Willard, for appellees.

PER CURIAM. The property in question was owned by Mrs. Ruth A. Fitch up to August 22, 1896, when she conveyed to her daughter Mrs. Houston, defendant in this action. The consideration expressed in the

Digitized by Google

deed is $1 and other sufficient considerations. The circumstances of the making of the deed may be fairly stated as follows: Mrs. Fitch was old and feeble, and for a number of years had made her home with the defendants. She had a limited amount of other property, and from the property in question she received a small rental. The defendants made no charge against her for support, and furnished her means with which to travel, etc., when her own were insufficient. It may also be stated in this connection that defendants continued to support her after the execution of the deed down to the time of her death, and they paid all the expenses of her last sickness and funeral. No request or demand was ever made upon Mrs. Fitch for compensation or a return of any of the moneys furnished her. On her part the execution of the deed was unsolicited and voluntary; she said she wanted her daughter to have the property; that this was her wish, and such had been the wish of her husband, the father of Mrs. Houston, who had died some years previously; that she also wanted W. W. Houston to be compensated for all his trouble on her account, as well as reimbursed for the moneys advanced to her or paid out for her benefit. The title to the property remained in Mrs. Houston until March, 1899, when the conveyance was made by Mrs. Houston to her husband. Both defendants had been insolvent for years, the amount of the indebtedness outstanding against each being very heavy. What business had been done by them was done first in the name of one and then in the name of the other. It is reasonably clear that both contributed to the expense of the support, etc., of Mrs. Fitch. Defendant W. W. Houston was discharged as a bankrupt a few days before the deed was made to him by his wife, and shortly thereafter Mrs. Houston made application to the bankruptcy court for a discharge.

It is unnecessary to further present the evidence. We think it sufficient to say that in our opinion all that had been done for Mrs. Fitch prior to the making of the deed was intended to be gratuitous. This is also true in respect of what was done thereafter. It is possible that the fact of the execution of the deed influenced the conduct of defendants in some degree, but we think the mother would have been cared for by them notwithstanding such deed. That W. W. Houston did not regard himself in the light of a creditor, or as having any beneficial interest in the property, fairly appears from his own testimony, and this conclusion is confirmed by the fact that he did not schedule any such claim or interest as part of his assets in the bankruptcy court. The deed to him from his wife was voluntary, and no actual consideration passed between them. Such being the circumstances presented, there is no merit in the argument that Mrs. Houston was a trustee for the benefit of her husband, and that the conveyance made was in execution of her trust. We conclude that what was intended was to avoid, if possible, a taking of the property in satisfaction of the debts outstanding against Mrs. Houston This was the view taken by the trial court, and, inasmuch as we share therein, it follows that the decree must be and it is affirmed.

PAULUS v. REED.

(Supreme Court of Iowa. Oct. 12, 1903.)

EQUITY — CONVEYANCE BY INCOMPETENT — CONVEYANCE TO WIFE—TRUST — ENFORCEMENT—DEEDS—CONSIDERATION — LOVE AND AFFECTION.

1. The consideration of love and affection will support a deed from husband to wife, no rights of third persons intervening.

2. In an action by the guardian of an incompetent to set aside his conveyance because of unsoundness of mind at the time of the conveyance the burden is on him to show such mental condition.

3. Mere weakness of mind, without fraud or undue influence, is insufficient to invalidate a conveyance.

4. In order to show a conveyance invalid on the ground of mental incapacity it is not necessary to show insanity or idiocy, but a mental deficiency justifying a conclusion that the grantor did not exercise deliberate judgment is sufficient.

5. If a conveyance has been obtained through the relation of trust and confidence between husband and wife, and the grantor is of weak mind, and there is manifested a disposition to so manage the property as to deprive the grantor of all interest or benefit therein, the courts will interfere and arrest the wrongful disposition of the property.

6. During childhood a man was partially deaf and dumb and blind, and his mentality such as to preclude education. He married a young and strong woman, who took control of all his business matters, and on a sale of his lands the consideration paid was invested in other lands, and title taken in her name, and thereafter she died. *Held*, that in a suit between his guardian and her father, claiming an interest in the lands under the statute of descent, the principle of an implied trust in favor of the husband was applicable, and equity would declare that defendant had no equities in the property.

Appeal from District Court, Montgomery County; N. W. Macy, Judge.

Action in equity by plaintiff, as guardian of Tunis Van Horn, a person of unsound mind, praying that his said ward be decreed to be the owner in fee simple of certain real estate, that the defendant be decreed to have no right or title thereto, and that title be quieted in said Tunis Van Horn. There was a decree in favor of plaintiff, and defendant appeals. Affirmed.

E. C. Gibbs and R. W. Beeson, for appellant. J. M. Junkin and Ralph Pringle, for appellee.

BISHOP, C. J. At the time of the trial Tunis Van Horn was about 42 years of age. Some years ago the father of said Tunis con-

¶ 1. See Husband and Wife, vol. 26, Cent. Dig. § 235.

Digitized by Google

veyed to him a farm consisting of 160 acres. This was done, as testified to by the mother of Tunis (the father now being dead), that he might have something for his support, to take care of himself. There was no other consideration. A short time thereafter, and about 10 years ago, Tunis married Sarah Reed, a daughter of the defendant, then a young woman of about 24 years of age. They went to live together upon the farm. During the period of their residence there a deed of the farm was executed by Tunis to his wife. In 1899 this farm was sold, both wife and husband joining in the deed, and there was realized from the sale thereof the sum of $4,000 in cash. Some $3,000 of said sum was then invested in the land in controversy, the title being taken in the name of the wife. In 1900 said Sarah Van Horn died, intestate, and without issue. She left surviving her the said Tunis, her husband, and the defendant, her father, as her only heirs at law. The defendant makes claim to be the owner of an undivided one-half the real estate in controversy, and this action is brought to cut off and bar any such right or equity therein. The action is based upon the allegation that at all the times in question the said Tunis was of feeble and unsound mind, and wholly incapable of transacting business and executing papers, and incapable of understanding or comprehending the force or effect of his acts and transactions; that this was known to his said wife; and that she paid no consideration, valuable in character, for the property conveyed to her. The answer of the defendant presents no issue of fact save as to the alleged mental condition of said Tunis. That there was no consideration, valuable in character, passed between Tunis and his wife, is of itself immaterial. It is elementary that the consideration of love and affection will support a deed made by a husband to his wife, there being no rights of third persons intervening. Mercer v. Mercer, 29 Iowa, 558. So, too, the law presumes every man to be sane, and to understand the nature and effect of his acts and transactions. The burden was upon the plaintiff, therefore, to establish the fact of unsoundness of mind existing at the time the deed of the farm was made to the wife, and, failing in this, the defendant is entitled, as under the statute provided, to an interest in the real estate of which his daughter died seised. It is to be observed that fraud or undue influence is not alleged in terms; the averment made is simply that the deed was made. Now, mere weakness of mind alone, without fraud or undue influence, is not sufficient to invalidate a conveyance, and this has been repeatedly held. Campbell v. Campbell, 51 Iowa, 713, 2 N. W. 541; Burgess v. Pollock, 53 Iowa, 273, 5 N. W. 179, 36 Am. Rep. 218; Elwood v. O'Brien, 105 Iowa, 241, 74 N. W. 740. On the other hand, no one will contend that the contract of a person of unsound mind, amounting in a practical sense to imbecility, should be upheld. But it is not necessary, in order to defeat a contract, that weakness of mind amounting to positive idiocy or insanity be shown. If it appears that there is a mental deficiency so marked as that the conclusion is justified that the party has not exercised any deliberate judgment concerning the transaction in question, but, on the contrary, has been simply as putty in the hands of a stronger will, then it cannot be said that a contract has been executed. A vital element is lacking, in that there cannot then be said to have been any meeting of minds. Out of such a transaction there is presented the product of but one mind. Now, we take it that in the case of a conveyance by a husband to his wife, or from the wife to the husband, the grantor being weak of mind, and a controversy thereafter arises between them or those representing them, the courts will scan the transaction very closely to discover the animus with which the contract was brought about. And if it shall appear that the rights and interests of the grantor are intended to be and are being fairly subserved, the court may go further in upholding the conveyance than would be warranted in a case presenting simply an ordinary business transaction with a stranger. The reasons therefor will readily suggest themselves to the mind, and need not here be dwelt upon. On the other hand, if a conveyance has been obtained through the relation of trust and confidence which presumably exists between husband and wife, and there is manifested a disposition to so manage or dispose of the property as to deprive the grantor of all interest therein or benefits therefrom, the courts should and will be swift to interfere and arrest the wrongful disposition of the property. "Contracts made between persons sustaining relations of trust and confidence, where it appears that the stronger and controlling mind has obtained a conveyance of property, are jealously watched and guarded by courts of equity, and set aside, unless the beneficiary shows the bona fides of the transaction." Spargur v. Hall, 62 Iowa, 498, 17 N. W. 743; Earhart v. Holmes, 97 Iowa, 649, 66 N. W. 898. In either case many of the substantial elements of a trust are to be found, and the principles which find application in cases where a trust is declared upon must be taken into account largely in arriving at a conclusion. If good faith and fairness dominate the transaction, and no equities appear to dictate otherwise, such a conveyance may well be sustained; otherwise it should be set aside. So, too, we think a case might be presented where such a conveyance should be set aside, even though it appear that, as between the parties themselves, there was no fraud or bad faith. Take the case of a transfer of property by a husband to his wife, the former being confessedly weak-minded, and the apparent object of the transfer being to make

Digitized by Google

certain that the property would be properly preserved, cared for, and managed in the interests of the family (the husband, of course, included), now certainly the trust principle could be invoked as a barrier to prevent existing creditors of the wife from seizing upon the property and appropriating the same in payment of their debts. So, too, she might not transfer such property in payment of her individual indebtedness, to the extent, at least, of interfering with the purpose for which the transfer to her was made. Nor could she put the property beyond reach of a court of equity by making an absolute transfer thereof to a stranger, whatever may have been her real intentions in so doing. The rights of an innocent purchaser for value would undoubtedly be protected, but the disposition of the fund would be subject to the control of the court. Now, we are unable to see why like principles should not have application where it is made to appear that the evident purpose of a transfer has been interrupted or frustrated by accident, and in this connection we may term death an accident, when it is not anticipated in reason that it will probably intervene to destroy the purposes of the transfer.

Coming back now to the case before us, if the evidence fails to establish a want of mental capacity on the part of Tunis Van Horn to make the deed in question understandingly and comprehending the legal force and effect thereof in a reasonable degree, then we may dismiss the case from any further consideration. If, on the other hand, it should be said that the evidence discloses a total want of capacity, the relief prayed for by plaintiff should be granted as a matter of course. But the facts, as disclosed by the record, lie along between the two extremes. These, in brief, appear: During childhood Tunis was afflicted with a disease which left him shattered in body and mind. He was partially deaf and dumb and blind. His mental faculties were so far deranged that education was impossible, and he thus grew up having a more or less imperfect knowledge and comprehension of common things, and of such only, and with a very limited capacity for the association of ideas, or to reason from cause to effect. He was a charge upon his parents; capable of attending to minor duties, but not trusted in matters involving responsibility. It was not expected he would ever marry, and his parents opposed his marriage when it did take place. The woman he married was young and healthy. She had known Tunis for many years, and was fully advised of his defective physical and mental condition. There is no suggestion that she was herself feeble-minded; and, if she took pecuniary considerations into view in contemplating marriage with Tunis, such was perfectly known to her alone. Suffice it to say, she at once took full and complete control of all business matters, and conducted the same in her own name, and according to her own notions, down to the time of her death. To our minds, the conclusion is irresistible that on her part she took the view that she was capable of conducting their affairs and that her husband was not; that, inasmuch as she had taken upon herself the burden of his care, it was better that she would have full dominion over the property, title thereto included. It is equally conclusive that he had sense enough to recognize her strength and his own weakness, and that, without question or protest, he acquiesced in her complete dominancy. To such a case, surely, the principle of an implied trust to which we have made reference is applicable. Had she, in her lifetime, made a conveyance of an undivided one-half interest in the farm as a gift to her father, no matter what may have been the motive which prompted it, such could not have found toleration in a court of equity. No more can it be tolerated because the gift, instead of coming by a direct conveyance, is accomplished by her unexpected death.

We conclude that equity requires that the property in question should be preserved for the benefit of the ward of plaintiff, and that the defendant has no equities therein. The decree was therefore right, and it is affirmed.

SAUER v. NEHLS et al.

(Supreme Court of Iowa. Oct. 10, 1903.)

REFORMATION OF INSTRUMENTS—MISTAKE—PROOF—CONTRACTS—ENFORCEMENT—EQUITY—WITNESSES—TRANSACTION WITH DECEASED.

1. Notes and a mortgage securing them absolute in form will not be reformed in equity on the ground of mistake, unless the proof of such mistake is clear and satisfactory.

2. Where a father agreed that, if his son would purchase certain land, he would advance to the son the sum of $2,000, on which he should pay interest at the rate of 6 per cent. per annum during the father's life, and that nothing further should be demanded thereon, such agreement will be enforced in equity after the father's death.

3. In an action to have a certain mortgage given by plaintiff to his father reformed and canceled after the father's death, plaintiff was not a competent witness as to the agreement with his father to the effect that plaintiff was only to be required to pay interest on the loan during the father's life, and that it should be canceled on his death.

Appeal from District Court, Buchanan County; A. S. Blair, Judge.

The plaintiff is the son of Henry Sauer, deceased. He alleges that in 1900 his father advised him to purchase a farm adjoining land then owned and occupied by the plaintiff, and promised that, if he would do so, he would advance him $2,000 of the purchase price, upon which the plaintiff should pay him interest at the rate of 6 per cent. per annum during his life, and that nothing further should ever be demanded thereon. The

¶ 1. See Reformation of Instruments, vol. 42, Cent. Dig. §§ 157, 167, 179.

Digitized by Google

plaintiff bought the land, and at the time of the purchase his father furnished him $1,800 of the purchase price, and the plaintiff and his wife executed and delivered to him three notes of $600 each, and a mortgage on the land so bought, securing said notes. The notes were executed the 23d of June, 1900, are in the usual form, and promised to pay absolutely the sums for which they were given in six, seven, and eight years after date. The mortgage is also in the usual form, and without special conditions. On the 30th day of July, 1900, the plaintiff executed and delivered to his father another note of $75, due in 12 months, with the same rate of interest. This action is in equity, asking the reformation of the notes and mortgage, and that they be canceled and held for naught. There was a trial, and a judgment dismissing the plaintiff's action. He appeals. Affirmed.

H. W. Holman, for appellant. E. E. Hasner and Ransier & Everett, for appellees.

SHERWIN, J. There is no serious conflict between counsel as to the law applicable to this case, and, if the contract alleged were proven with that degree of certainty required in cases of this kind, the plaintiff would undoubtedly be entitled to the relief asked. The notes and the mortgage are absolute in form, and are presumed to contain the whole agreement between the parties; hence parol evidence, though admissible in equity for the purpose of ascertaining the true agreement, must afford clear and convincing proof of an agreement other than that expressed in the writing. A written agreement can only be reformed upon clear and satisfactory evidence of fraud or mistake, and the record before us is wholly insufficient to warrant a finding that the notes and the mortgage were not executed precisely as it was understood and agreed they should be, and the trial court was clearly right in refusing to reform them. This is conceded by the appellant in his reply argument, where he says that he makes no claim that the notes were to be written differently. Though the notes may not be reformed, it is undoubtedly true that, if the agreement claimed was actually made, and thereunder the notes and the mortgage were to be canceled upon the death of the father, equity would carry out such an agreement. But, to warrant the cancellation of the written agreement of a party, the evidence upon which it is done must be as clear and satisfactory to the mind of the chancellor, as must that upon which a reformation of a contract is based. The plaintiff was not a competent witness as to the agreement with his father, and the testimony upon which he rests his case consists of statements made by the deceased, long before the purchase of the farm by the plaintiff, that he was going to give the plaintiff $2,000 to buy it with, and that all that the plaintiff would have to do would be to pay interest thereon as long as the deceased lived, and that he would "make it all straight when he died." After the money was furnished the plaintiff, the deceased stated that he would cancel the notes "after he is dead." The entire evidence satisfies us that there was no gift or advancement to the plaintiff of the money so furnished to him, but that his father may have contemplated providing therefor in his will, reserving the absolute right to do so or not. He had at different times deeded valuable lands to his several sons, and in his will he provided for his several daughters.

We reach the conclusion that the plaintiff's proof does not sustain his claim, and the judgment is affirmed.

JOHNSON, LANE & CO. v. NASH-WRIGHT CO.

(Supreme Court of Iowa. Oct. 10, 1903.)

JUDGMENTS — DEFAULT — VACATION — FRAUD —PROCEDURE—DEFENSES — COUNTERCLAIMS — STATEMENT — BURDEN OF PROOF — EVIDENCE.

1. McClain's Code, § 4091, provides that, where a final judgment has been rendered, the district court may, after the term at which the same was rendered, vacate or modify it, or grant a new trial for fraud practiced in obtaining the same. Section 4094 declares that such relief may be had by petition, and section 4095 provides that the proceedings shall be the same as in ordinary actions. *Held*, that a proceeding to vacate a judgment under such sections should be by petition entitled in the original action, and not by a suit in equity.

2. On an application to vacate a judgment against a defendant by default for fraud, as authorized by Code, § 4091 et seq., the burden of proof of fraud, and that defendant has a good defense to the action, is on him.

3. Plaintiff's attorney agreed with defendant's attorney that he would not take a default after the filing of a substituted petition until he had advised the latter of his having filed such petition and his intention to take the default if no answer was filed. The substituted petition was filed March 14, 1900, and notice thereof was given to B., a member of the firm of S. & B., defendant's attorneys. On May 17th an order was entered requiring an answer by May 25th, and default was taken for want of an answer on May 31st. About the time notice was given of the filing of the substituted petition, B. retired from the firm and from active business, his place being taken by one M., who plaintiff proved had full knowledge of the case, and was present in the courtroom when the default was taken; but M. testified that he paid no attention to the business of the old firm, except as requested by S., who testified that he was never notified concerning the filing of the petition. *Held*, that such evidence was insufficient to show that the default was fraudulently taken.

4. McClain's Code, § 4091, requiring an application for the vacation of a judgment thereunder to set forth matters constituting a defense to the action if the party applying is the defendant, is not satisfied by a proposed answer containing a mere general denial.

5. Where a counterclaim pleaded in a proposed answer in a proceeding to set aside a default judgment for fraud did not appear to be, in effect, a defense, and it was not clear that the items thereof were proper subjects of a counterclaim, the filing thereof did not constitute a compliance with Code, § 4091, requiring an application to set aside a judgment

Digitized by Google

against a defendant, to state matters constituting a defense to the action.

6. Where, on an application to set aside a default judgment, the only evidence that defendant had a defense to the action was a statement of defendant's attorney that, in his opinion, defendant had a good and complete defense to the action and a good counterclaim, without any facts stated constituting a defense, it was insufficient to justify a vacation of the judgment.

Appeal from District Court, Mahaska County; John T. Scott, Judge.

The Nash-Wright Company brought an action in the district court of Mahaska county against Johnson, Lane & Co., to recover $200, balance due on account, which account, as it appears, showed debits of about $7,000 for money advanced, interest thereon, and commissions, and credits of about $6,800, for grain received to be sold on commission. On default entered for failure of the defendant in that action to answer plaintiff's amended and substituted petition, judgment was rendered for the plaintiff for the amount claimed. At a subsequent term, within one year, Johnson, Lane & Co. filed in the same court a petition in equity, asking that the default and judgment against them be set aside, and that they be given permission to file their answer in the original cause, and make their defense thereto, the ground for relief alleged being that at the time of the rendition of such judgment, and prior thereto, the attorneys for Johnson, Lane & Co. had an oral agreement with the attorney for the Nash-Wright Company that no default or judgment should be taken in said cause for failure to answer until they had been notified by the attorney of the opposite party of his intention to take such default. To this petition in equity the Nash-Wright Company answered, denying substantially the allegations thereof. Subsequently Johnson, Lane & Co. filed in the same court a pleading entitled as in the original action, in which they denied each and every allegation of plaintiff's petition in that action, in which judgment on default had already been rendered; and also set up a counterclaim against the Nash-Wright Company for $3,894.65, balance due on grain delivered for sale on commission. The trial court thereupon proceeded to try the issues presented by the petition in equity and the answer thereto, and, after hearing evidence, rendered a decree setting aside the judgment and ordering the original cause to be retried. From this decree the Nash-Wright Company appeals. Reversed.

Frank T. Nash and B. W. Preston, for appellant. Seevers & Malcolm, for appellees.

McCLAIN, J. By Code, § 4091, it is provided that: "Where a final judgment has been rendered, * * * the district court, in addition to causes for a new trial hereinbefore authorized, may, after the term at which the same was rendered or made, vacate or modify the same or grant a new trial: * * * (2) For fraud practiced in obtaining the same; * * * (5) For unavoidable casualty or misfortune, preventing the parties from prosecuting or defending." As there is no provision for entertaining a motion for a new trial, not filed "within three days after the verdict * * * or decision is rendered, unless for good cause the court extends the time, except for the cause of newly discovered evidence" (section 3756), nor for moving to set aside a default "unless application therefor is made at the term at which default was entered, or, if entered in vacation, then on the first day of the succeeding term," it is clear that the relief provided for by section 4091, above quoted, can be secured after the term only in accordance with the method pointed out in that section, and those following relating to the same subject. This method is, so far as applicable to the grounds of relief above quoted, by filing a petition in the district court, "setting forth the judgment or order, the alleged facts or errors constituting a cause to vacate or modify it, and the matters constituting a defense to the action, if the party applying was a defendant" (section 4094); and "in such proceedings the party shall be brought into court in the same way, on the same notice as to time, mode of service and return, and the pleadings, issues and form and manner of trial shall be governed by the same rules and conducted in the same manner, as nearly as may be, and with the same right of appeal, as in ordinary actions. No new cause of action or defense shall be introduced, and the matter stated in the petition shall be taken as denied without answer, and the issue shall be tried by the court." Section 4095. It is further provided that "the judgment shall not be vacated on * * * petition until it is adjudged there is a cause of action or defense to the action in which the judgment is rendered." Section 4096. The proceeding provided for is evidently a proceeding in the original action, although, if instituted after the term, it is to be by petition, and not by motion. While the jurisdiction of a court of equity to entertain a petition to set aside a judgment at law for fraud, or on account of other ground of equitable relief, is not expressly denied, it is evident that, so far as the remedy which might formerly have been sought only in equity may now be had in the case itself by petition, there is no occasion to resort to the equitable jurisdiction of the court, for equitable relief should not be given where the plaintiff has a plain, adequate, and speedy remedy at law. Within one year, therefore, after the rendition of judgment in an action at law, a party to that action seeking relief as against said judgment on any ground covered by the provisions of section 4091 ought to proceed under the provisions of that section and the other sections of the Code relating to that subject, and ought not to bring his action in equity. Hintrager v.

¶ 6. See Judgment, vol. 30, Cent. Dig. § 294.

Digitized by Google

Sumbargo, 54 Iowa, 604, 7 N. W. 92. It may be that, if there are any equitable grounds or relief against a judgment at law, not covered by Code, § 4091, the party seeking to set aside a judgment at law may, with reference to such grounds, still proceed, as formerly, in equity; and we have held that, after the expiration of one year, which is the limit of time within which the special action provided for by that section may be maintained (section 4094), the right to proceed by petition in equity, at least with reference to the grounds of relief recognized by section 4091, still exists. District Township v. White, 42 Iowa, 608; Bond v. Epley, 48 Iowa, 600. Plaintiffs in this case should, therefore, have filed a petition in the original case in which they were defendants, and should not have attempted to invoke equitable jurisdiction. However, as no objection to the forum was made, the case must now be tried on appeal as an equitable action.

But whether the proceeding be at law or in equity, the petitioner must show by his allegations and his evidence that he has some ground entitling him to relief. He has the burden as to allegation and proof. It is difficult to say under which one of the two statutory grounds already quoted plaintiffs seek to make out a case. They have alleged no casualty, unless it be the casualty of not having made their defense when they were called upon to do so by the ordinary rules of procedure, nor any misfortune save that of a judgment against them. We suppose, however, that their real contention is that the act of counsel for the plaintiff in the original action in taking judgment without notice of his intention to do so, in violation of his agreement to give counsel on the other side notice of such intention, constituted fraud, and we shall treat the case as though fraud had been formally alleged as constituting the basis for the relief asked. But fraud, if alleged, must be proven, and it is necessary, therefore, to see what evidence there was tending to show fraud. Objection was made on the trial to any evidence of the alleged agreement between counsel for the respective parties, on the ground that it was not in writing, as required in Code, § 319. But, without discussing the applicability of that section, it is sufficient to say that Attorney Nash, who represented the Nash-Wright Company in the original action and also in the present proceeding, seems to admit in his testimony that he made the arrangement with opposing counsel as alleged, and the agreement was therefore sufficiently proved, under the requirements of the section just cited. But Nash further testifies that he did give notice to opposing counsel, in accordance with the agreement, and he claims, therefore, that any subsequent failure of opposing counsel to interpose a defense was without fault on his part. It is with reference to the giving of the notice contemplated by the agreement that the testimony is in conflict, and it is therefore necessary that we state the facts in some detail. The agreement seems to have been that Nash should have leave to file an amended and substituted petition, and that he should not proceed to take default thereunder until he had advised opposing counsel of his having done so, and of his intention to proceed to default if no answer was filed. This is certainly the most liberal view which can be taken of the terms of the agreement. He filed his amended and substituted petition on the 14th of March, 1900, which was during the February term of court. On May 17th, which was during the April term of court, he procured an order to be entered for answer to his amended and substituted petition by May 25th, and he took default for want of such answer on May 31st. His testimony is that on the same day or the day after it was filed he notified opposing counsel of the filing of his amended and substituted petition, and of his desire that they should proceed further in the case, and that he several times subsequently called their attention to the matter before he proceeded to procure the order requiring an answer. It appears that at the time the amended and substituted petition was filed the defendant in the action was represented by Seevers & Bryan, but that Bryan had exclusive charge of the case for the firm. That Nash advised Bryan of the filing of the pleading is not denied, but Seevers testifies that he himself was never notified, and that Bryan about that time withdrew from the active business of the firm, and left his home, on account of ill health. Seevers and Malcolm both testify that their firm, which now represents Johnson, Lane & Co., was formed in March, but that Malcolm gave no attention to the business formerly in charge of Seevers & Bryan, except as he was requested to do so by Seevers. This is important, with reference to the testimony of Nash, for he claims that several times before taking default in May he spoke to Malcolm about the case, and that Malcolm was present in the courtroom, and knew what was being done, when default was finally taken. Now, it seems to us that, if Bryan was properly notified, in accordance with the terms of the agreement, then Nash was guilty of no fraud; and, further, that if Nash believed Malcolm, as Seevers' partner, to be an attorney in the case, and advised him as to the situation, then there was no fraud. Plaintiffs, in order to make out their case, must introduce clear and satisfactory evidence of the fraud charged, and we think they have failed to do so.

As already stated, the plaintiff in a proceeding such as this, to set aside a judgment, must allege matters constituting a defense to the action if he was the defendant therein, and the judgment is not to be vacated until it is adjudged that there is a defense to such action. It appears that the plaintiffs in this proceeding did not allege any grounds

Digitized by Google

of defense in their petition, nor did they tender any answer setting up a defense which they desired to interpose to the original cause of action in case the judgment should be vacated and a new trial granted. But they did subsequently file what purported to be an answer in the original action. As to this we may say, in passing, that the filing of such answer was wholly irregular and unauthorized. A judgment had been entered against them, and they had no right to file an answer until the judgment had been set aside. However, treating this irregular answer as though it were a statement of their defense to the original cause of action, which they should have alleged in their petition, or in a proposed answer referred to in the petition as one which they desired to file should the judgment be set aside, we find that such answer contained, first, a general denial of liability, and, second, a counterclaim. A general denial, in the ordinary form of pleading, is certainly not an allegation of the matters constituting a defense to the action, such as is required by the Code in a proceeding to set aside a judgment. As to the counterclaim, plaintiffs were not entitled to have that considered, for the reason that a counterclaim is no answer in itself to the right of plaintiff to recover on his cause of action. If it should be thought that possibly this counterclaim was, in effect, a defense, and negatived the existence of any balance due the Nash-Wright Company from Johnson, Lane & Co., the sufficient answer is that the fact is not made to appear. It is difficult to say whether the counterclaim and plaintiffs' original petition related to the same matters of account as between the two parties, for the reason that the abstract, while referring to exhibits to the original amended and substituted petition, and the counterclaim as setting out the items of the respective accounts referred to in those two pleadings, does not set out the exhibits in full, but states only their substance, and we cannot tell whether any of the items set up in the counterclaim were items included, or which should have been included, in the Nash-Wright Company's account or not. All we know is that from the allegations of the two pleadings it appears that the original account sued on covered debits and credits between March 1, 1895, and October 31, 1895, while the counterclaim purports to cover items for grain shipped to the Nash-Wright Company by Johnson Lane & Co. between September 30, 1892, and July 8, 1896. If the credits for which Johnson, Lane & Co. sought recovery in their counterclaim were such as were included, or ought to have been included, in the original Nash-Wright Company account, then they were not proper subjects of counterclaim at all; and, if they were not credits which were or ought to have been included in that account, then they amount to a counterclaim pure and simple, on which Johnson, Lane & Co. might have sued the Nash-Wright Company at any time; and it is plain that such a counterclaim would not constitute any defense which could be set up as affecting the validity of the original judgment rendered in favor of the Nash-Wright Company. The only issue, therefore, which the court could legitimately try in the proceeding for a new trial was the issue which Johnson, Lane & Co. sought to interpose by their general denial.

Conceding for a moment that the mere general denial was a sufficient allegation of a defense, we are brought to the question whether the defense was proven, for the burden of proof in this proceeding is on the defendant; that is, the party asking to have the judgment vacated to show that he has a defense to the action in which the judgment was rendered. It must be borne in mind that this is not a proceeding merely to set aside a default, but an action to secure the vacation of a solemn judgment of the court, and that the plaintiff in this proceeding is not entitled to relief until he has established not only some fraud or irregularity in procuring the original judgment, but also has satisfied the court that he has some ground of defense. No matter how fraudulent or irregular the judgment may be, if it is a judgment which ought to have been rendered, there is no reason for setting it aside. It is true that the court does not finally determine the merits of the defense, but the party asking the privilege of being allowed to interpose it after the rendition of judgment against him should at least go so far as to make a prima facie defense as against the claim on which the judgment was founded. Without any pleading by the opposite party, the facts relied on by way of defense to the original action are directly in issue, and the truth of these facts is to be determined by the court. Code, §§ 4095, 4096. If the judgment is vacated, the original action, with the defense interposed, will be tried. But the court is nevertheless charged with the duty in the proceeding to set aside the judgment of ascertaining on the evidence, whether any facts existed which, if established on the retrial, would prima facie constitute a defense. Miracle v. Lancaster, 46 Iowa, 179; Dryden v. Wyllis, 51 Iowa, 534, 1 N. W. 703; Worth v. Wetmore, 87 Iowa, 62, 54 N. W. 56; Coleman v. Case, 66 Iowa, 534, 24 N. W. 31. In the case before us the only showing of any kind indicating a valid defense by Johnson, Lane & Co. to the original cause of action of the Nash-Wright Company consists of a question propounded to Seevers, one of the attorneys for Johnson, Lane & Co., and his answer thereto, as follows: "Q. Did the defendants have a good defense in this case, from your investigation of the facts as they gave them to you? A. In my opinion, they have a good and complete defense to the action, and a good counterclaim." The question

Digitized by Google

was objected to on the ground of incompetency, because it asked for the conclusion of the witness. But this objection was overruled. Certainly there was no competent testimony here of the existence of any fact whatever that constituted a defense. Not only does the witness fail to testify as to the existence of any fact, but he fails to disclose the nature or substance of the defense. How could the trial judge, from this evidence, have any knowledge whatever as to whether, if a new trial were granted, there would be even a colorable defense to the cause of action, supported by the testimony of witnesses competent to testify as to the facts? On this ground alone, therefore, the trial court should have refused to set aside the judgment.

Furthermore, it is elementary that, if the party seeking to set aside the judgment has been unsuccessful in the original action by reason of any negligence on his part or on the part of his attorneys, the court should refuse to interfere for the plain reason that one who himself has brought about a result injurious to him cannot complain of the acts of others contributing thereto. When the order was made in the original case on May 17th, requiring the defendants to answer by May 25th, they were bound to take notice of such order, irrespective of any preceding arrangement, and we think that they are not entitled to relief as against a judgment entered against them by default two weeks afterward.

The action of the lower court in setting aside the judgment and granting a new trial was erroneous, and it is reversed.

SCOTT v. FRANK.

(Supreme Court of Iowa. Oct 12, 1903.)

INJUNCTION BOND—RIGHT TO RECOVER DAMAGES—WAIVER—ISSUE NOT RAISED.

1. Recovery cannot be had on a bond given on issuance of a temporary injunction, conditioned to pay damages occasioned by it, there being grounds for its issuance, though they are first stated in the amended petition for injunction, notwithstanding the injunction is dissolved because of condemnation proceedings instituted after the granting of the writ.

2. The question of waiver of objections interposed to an assessment by omission of facts from a petition for injunction, afterwards introduced by an amended petition therein, cannot be considered for the first time in appeal from judgment on the injunction bond.

Appeal from District Court, Pottawattamie County; O. D. Wheeler, Judge.

On May 18, 1898, the county superintendent of Pottawattamie county advised D. S. Frank by letter that he had appointed referees to assess the damages which he, as owner, might sustain by the appropriation of an acre of land, exclusive of highway, "located on the S. E. ¼ of the S. E. ¼ of section 4, township 74, range 12, commencing about 40 rods north of the southeast corner of said section 4, on the highway running north and south on the east side." May 31st the referees so appointed reported to the superintendent that they had assessed the damages which would be occasioned by appropriating the land described as above at the sum of $60, and of this fact the superintendent wrote Frank June 1st following. On June 4th Frank presented a petition, in which Keg Creek district township, its officers, and the county superintendent were named as defendants, alleging that the ground proposed to be condemned had growing thereon an orchard of fruit trees and a dwelling house a few rods therefrom, to one of the judges, and procured a writ of injunction restraining them "from taking possession of or in any way appropriating or using the whole or any part of one acre of land S. E. ¼, S. E. ¼, section 4, township 74, range 42, or going upon the same, directly or indirectly, for any purpose." To the petition were attached the letters from the superintendent and the report of the referees, but no relief was asked because of irregularity therein. The defendants therein answered July 6th that a definite site had been condemned, but when selected, in March previous, with Frank's knowledge, there was no dwelling house nor orchard near it, and that a shanty was subsequently erected, and a few apple trees set out, with the fraudulent purpose of preventing the appropriation of the land for school purposes. They prayed for the dissolution of the temporary writ of injunction. A motion to dissolve, based on the facts stated in the answer, was filed, and also a resistance, in which Frank urged for the first time that notice of the proceedings as required by statute was not served on him, and that said proceedings were void because of the uncertainty in the description of the land proposed to be condemned. This motion was submitted on the 1st of August, and five days later Frank filed an amended and substituted petition averring the above defects in the proceedings. August 16th the court overruled a motion to strike the pleading last mentioned, and made the following entry: "It appearing from said petition and answer that the condemnation proceedings in question are void for uncertainty, the motion to dissolve injunction is denied, without prejudice, however, to the right of defendants to renew said application when they shall have legally condemned the land in question." Thereafter land was regularly condemned, and defendants set up facts with respect thereto in an amended and substituted answer, and upon final hearing on the merits the petition was dismissed, and the temporary writ of injunction dissolved. This is an action by the assignee of the Keg Creek district township to recover for attorney's fees reasonably expended in procuring the dissolution of the writ of injunction. Trial resulted in a ver-

Digitized by Google

dict and judgment against defendant, and he appeals. Reversed.

W. H. Ware, for appellant. John P. Organ, for appellee.

LADD, J. The bond sued on is conditioned for the payment of all damages, occasioned by a writ of injunction restraining the defendants in the suit of Frank v. Board of Directors of Keg Creek District Township and others from interfering with the former's possession of an acre of land sought to be appropriated for school purposes. To sustain an action for damages it must be made to appear that such injunction was wrongful in its inception, or at least was continued owing to some wrong on the part of plaintiff. If rightfully awarded, but afterwards properly dissolved because of matters done or arising subsequent to its issuance, there can be no recovery of damages. In other words, the parties whose wrongdoing has made the writ necessary cannot justly complain of not being allowed expenses for remedying and readjusting a situation for which they alone are responsible. Sutherland, Dam. (1st Ed.) vol. 11, p. 78; Massie v. Sebastian, 4 Bibb, 437; Lampton v. Usher's Heirs, 7 B. Mon. 57; Findlay v. Carson (Iowa) 66 N. W. 759; N. Y., W. S. & B. R. Co. v. Omerod, 29 Hun, 274; Palmer v. Foley, 71 N. Y. 106. See Pierson v. Ells, 46 Hun, 336; Creek v. McManus, 13 Mont. 152, 32 Pac. 675. No doubt the final decree entered in the injunction suit is, as contended by appellee, to be regarded as res adjudicata in this action of all issues therein decided. Shenandoah Nat. Bank v. Read, 86 Iowa, 136, 53 N. W. 96. The merits of the original controversy will not be re-examined, but this does not preclude inquiry as to precisely what was determined. To aid in doing this the entire record, including the pleadings, was admissible in evidence. Campbell v. Ayres, 6 Iowa, 339; Hopkins v. State, 53 Md. 502; Garrett v. Logan, 19 Ala. 344. Did the court decree that the restraining order was improvidently obtained, or merely that, owing to the subsequent condemnation of the land, the injunction should be dissolved? The original petition alleged that there was an orchard on the acre sought to be appropriated by the board of directors as a site for a new schoolhouse, and that said schoolhouse would be within 40 rods from a dwelling house. Had this been all, we might agree with the district court that, even though the motion to dissolve the writ of injunction restraining said board from interfering with Frank's possession was overruled, yet, as it finally appeared that on these allegations he was not entitled to a writ, damages might be awarded on the injunction bond. See Bank of Monroe v. Gifford, 65 Iowa, 648, 22 N. W. 913. But other facts existed at the beginning of the action, though not then stated in the petition, amply sufficient to support the writ. These were first asserted in resistance of the motion to dissolve, and not until it had been submitted did Frank file the amended and substituted petition, in which he for the first time alleged that no notice of the condemnation proceedings had been served upon him, and that the description of the land to be appropriated was uncertain, so that it could not be located. On these grounds the motion to dissolve was overruled, and they were only obviated by again condemning the acre desired. The defendants in that action then were rightly restrained from interfering with Frank's property. That the grounds for so deciding were first stated in an amendment after the issuance of the writ is not important. The relief sought was the restraining order, the facts existed justifying its issuance, and all the amendment did was to aver additional facts in support of the same cause of action. In such circumstances the amendment is regarded as a continuation of the original pleading, and as relating back to the commencement of the suit. 1 Ency. P. & P. 621; Seevers v. Hamilton, 11 Iowa, 66; School Town of Monticello v. Grant, 104 Ind. 168, 1 N. E. 302; Fleenor v. Taggart, 116 Ind. 189, 18 N. E. 606; Schuyler Nat. Bank v. Bollong, 28 Neb. 684, 45 N. W. 164; Verdery v. Barrett, 89 Ga. 349, 15 S. E. 476; Agee v. Williams, 80 Ala. 636; Brockaway v. Thomas, 32 Ark. 311; Clark v. Delaware, etc., Canal Co., 11 R. I. 36. See Branch of State Bank v. Morris, 13 Iowa, 136; Citizens' Nat. Bank v. Converse, 105 Iowa, 669, 75 N. W. 506. If there were any merit in appellee's suggestion that the omission to mention these matters in the first petition was a waiver of the objections interposed, it is enough to say that no such issue was raised. The right to file the amended and substituted petition was upheld, and in the amended and substituted answer thereto the illegality of the first condemnation proceedings is expressly admitted, and the subsequent proceedings by which one acre of Frank's land was lawfully appropriated for school purposes was averred as a ground for the dissolution of the restraining order previously obtained. Up to that time the defendants in the action were in the wrong, and that wrong justified the injunction. The interposition of the injunction as an impediment to the appropriation of the schoolhouse site resulted from the erroneous proceedings of the board of directors. No good reason can be suggested for relieving the board from the burden of removing it, and neither such board nor its assignee ought to recover the expenses incurred in so doing.

Reversed.

Digitized by Google

CURRIER v. JONES, Warden, et al.

(Supreme Court of Iowa. Oct. 9, 1903.)

DEEDS — DESCRIPTION — LAND CONVEYED — TRESPASS—REMOVAL OF FENCE —INJUNCTION.

1. Where, when plaintiff built a fence on what he claimed to be the line between himself and an adjoining owner, the other owner was in peaceable possession of the land on which the fence stood, plaintiff was a trespasser, and not entitled to an injunction to restrain the other from removing the fence.

2. Where plaintiff built a fence on what he claimed was the boundary line between himself and an adjoining owner, who was in peaceable possession of the land on which the fence was built, and such owner removed the fence, plaintiff's contention that, having brought an action to try the title to or right of possession, he should not be sent out of court because he had erred in proceeding in equity, instead of first establishing his rights at law, was not sound; he having asked no relief save injunction, and, in an argument on another branch of the case, having asserted that no question as to title, etc., was involved.

3. The state, which owned, for penitentiary purposes, two lots, the northerly of which was numbered 1116, and the south half of one north of No. 1116, was deeded a piece of land east of such tract, the south line of the land conveyed being an extension of the south line of the tract. The call for the east line was "thence north 900 feet to a point intersected by a line running east from the northeast corner of lot 1116, known as the northern parcel of ground used for penitentiary purposes containing four acres and sixty-three hundredths." If the call had extended to a line drawn from the northeast corner of the half of the lot north of lot 1116, the land conveyed would have extended south and north co-terminously with the tract, and would have contained within five one-hundredths of an acre of the amount of land called for. *Held*, that the monument given as the termination of the call not being fixed definitely as the point from which the line was to be run was described as the corner of a known parcel, and the half lot being generally regarded as the northern portion of the penitentiary tract, the deed should be held to have conveyed land extending northerly to a line from the northeast corner of the south half of the lot north of 1116.

Appeal from Superior Court of Keokuk; F. T. Hughes, Judge.

The plaintiff alleges that he is the owner of a certain lot in the city of Ft. Madison, and that the state of Iowa owns and uses for penitentiary purposes certain land adjacent thereto, and that in November, 1899, he erected a fence on the boundary line between his land and that of the state, which was subsequently removed by the state, and that he was prevented from rebuilding the same. He asks that an injunction issue restraining the state or its officers from interfering with the erection of a fence on such line, and from removing any fence which he may build thereon. The defendants answer, stating that the land whereon the plaintiff erected the fence in question is the property of the state, in fee simple, and that it has been in the possession of the state, under claim of title, for more than 10 years. There was a trial, and a judgment for the defendant. The plaintiff appeals. Affirmed.

T. B. Snyder, W. E. Blake, and Stutsman & Stutsman, for appellant. C. W. Mullan, Atty. Gen., James C. Davis, and Hollingsworth & Blood, for appellees.

SHERWIN, J. In 1851 there was deeded to the state, for penitentiary purposes, lots 1115, 1116, and the south 202 feet of lot 1117, in Ft. Madison, and in 1858 G. W. Elsroad and wife conveyed to the state a strip of land 200 feet wide, by the following description: "Commencing on the east side of that street in Fort Madison known on the plat of said town as Oriental Street, at a point where said street is intersected by the south line of Fourth Street in the Town of Fort Madison, thence due east two hundred (200) feet, thence north and parallel with said Oriental Street nine hundred (900) feet, be the same more or less, to a point two hundred (200) feet east of said Oriental Street intersected by a line running due east from the northeast corner of lot eleven hundred and sixteen (1116) in Fort Madison, known as the northern parcel of ground in Fort Madison owned by the State of Iowa for penitentiary purposes, containing four acres and sixty-three hundredths ($4^{63}/_{100}$) be the same more or less." The land now owned by the plaintiff was then owned by G. W. Elsroad and was afterwards platted by him as lot 6; the plaintiff becoming the owner thereof shortly before this suit was brought, in 1899. The real controversy on the merits of the case is over the northern boundary of the track conveyed by Elsroad and wife to the state in 1858. For at least 15 years before the plaintiff built the fence in question, a part of the land which he claims as belonging to lot 6 was inclosed and occupied by the state. It had fenced in a portion of it for cemetery purposes, and had erected a water reservoir which was partly thereon and within the fenced inclosure. At the time the plaintiff built the fence which was removed by the state, the state was in peaceable possession of all of the land which it had inclosed, and the plaintiff entered thereon without legal right or authority. He was in fact and in law a trespasser, and could acquire no legal or equitable right by his wrongful act. Kimball v. Shoemaker, 82 Iowa, 459, 48 N. W. 925. The substance of his prayer for relief is that he be not molested in his unlawful act, or, in other words, he asks a court of equity to sanction such act by its decree, instead of first establishing his right by proper proceedings, and then applying to a court of chancery for protection therein, if necessary. He chooses an unlawful course, and asks protection therein. That such protection should not be given is self-evident, and for this reason alone we think the bill was properly dismissed.

The plaintiff, in substance, claims, how-

¶ 1. See Injunction, vol. 27, Cent. Dig. § 77.

Digitized by Google

ever, that having brought an action to try the title to, or right of possession of, the land in question, he should not be sent out of court without relief because of his mistake in proceeding; but this contention is not sound, because the plaintiff asks no relief except that an injunction be granted restraining the defendant from interfering with his unlawful acts, and in argument on another branch of the case he asserts that no such questions are in the case, and, such being true, he cannot claim that any question other than the right to injunction on the facts alleged was before the court, and the authorities relied upon by him are not, therefore, in point. Moreover, on the merits of the case, we think the plaintiff not entitled to maintain his action, for two reasons: The deed from Elsroad and wife to the state describes the land conveyed as commencing at the intersection of the south line of Fourth street with the east line of Oriental street; thence east 200 feet; thence north 900 feet, more or less, to a point 200 feet east of said street, intersected by a line running east from the northeast corner of lot 1116, known as the northern parcel of ground in Ft. Madison owned by the state of Iowa for penitentiary purposes, containing $4^{63}/_{100}$ acres, more or less. While it is the general rule that known and fixed monuments control courses, distances, and area, it is also true that, where the monuments are not fixed and certain, they are no more controlling than other descriptions. The reason why they are given greater force when certain and definite is because of the elements making them so in fact. Here the monument, the northeast corner of lot 1116, is not definitely fixed as the point from which the line is to run east to intersect the north and south line 200 feet east of Oriental street, because the deed further says that the point from which it is to be run is the northeast corner of the land known as the northern parcel of ground in Ft. Madison owned by the state for penitentiary purposes. The state acquired title to the south 202 feet of lot 1117, it being directly north of lot 1116, at the same time that it acquired title to the latter lot; and there is nothing in the record tending to show that this fact was not as well known as that it held title to any of the lots, and it will be presumed that the true situation was known and understood. It is conceded by both sides that the distance of 900 feet named in the Elsroad deed was a mistake, under any view of the case, for, if the north end of the line is established at the intersection of a line due east from the northeast corner of lot 1116, as contended for by the plaintiff, the strip of land conveyed would be only 818 feet long; and, if established at the point contended for by the state, it would be 1,020 feet long. We then have uncertainty in the monument and in the distance, and, such being the case, we are to look to that which is the most certain for the purpose of determining the intention of the parties. Hicks v. Coleman, 25 Cal. 122, 85 Am. Dec. 103; Hall v. Shotwell, 66 Cal. 379, 5 Pac. 683; McClintock v. Rogers, 11 Ill. 279; Pierce v. Faunce, 37 Me. 63; Hoffman v. City of Port Huron (Mich.) 60 N. W. 831; Gaveny v. Hinton, 2 G. Greene, 344; 4 Ency. of Law (2d Ed.) 800. The deed conveys $4^{63}/_{100}$ acres, more or less, and the actual area claimed by the state is $4^{68}/_{100}$ acres, while that conceded by the plaintiff is but 3.74 acres. The quantity of land conveyed is as nearly certain as is usual. A variation of $^{5}/_{100}$ of an acre is slight, and is covered by the terms of the deed. Furthermore, this amount just filled out the tract owned by the state. There are other circumstances tending to support this conclusion, which we will not specifically mention. On the whole record, we conclude that the deed was intended to and did convey to the state the land claimed by it. We do not discuss the claim of adverse possession though we think it well sustained by the evidence.

The judgment is affirmed.

ROGERS v. FRENCH.

(Supreme Court of Iowa. Oct. 14, 1903.)

SALE—OFFER OF AGENCY—ACCEPTANCE AS PURCHASER—PURCHASE BY AGENT FROM PRINCIPAL.

1. Plaintiff wrote defendants that if they could afford to make prices for ice of $1 and $1.25 per ton, according to size of sale, he would do his best to sell it for them. They answered that he might sell ice at the prices mentioned, and gave him an order for access to their icehouse, in case he secured any orders for ice. Thereafter he telegraphed them that he had an offer for all the ice of 75 cents a ton net to them, and asked if he should accept. They wrote that they would accept his offer. *Held*, that their offer was merely an acceptance of his proposition to sell the ice as their agent, and that therefore his subsequent acceptance as a purchaser in his own right was not responsive to their offer, and did not effect a contract.

2. Where an offer to sell ice does not specify the time of payment, it will be presumed that payment is to be in cash on delivery; so that an acceptance, "Will take the ice; commence loading Monday; will weigh and settle promptly," is not an unconditional acceptance, that will effect a contract.

3. Where defendants authorized plaintiff to sell ice for them at $1 and $1.25 per ton, and he, without informing them that he had received an offer of $1.50 a ton for it, purchased it of them for himself at 75 cents a ton, the sale is not binding on them.

Appeal from District Court, Humboldt County; A. D. Baille, Judge.

Action to recover damages for refusal to deliver a certain lot of ice under a contract for the sale thereof. On motion the court directed a verdict for defendant, and rendered judgment thereon against the plaintiff for costs. Plaintiff appeals. Affirmed.

¶ 3. See Principal and Agent, vol. 40, Cent. Dig. §§ 133, 135, 136.

Digitized by Google

Prouty, Coyle & Prouty, for appellant. Healy Bros. & Kelleher and P. Finch, for appellee.

McCLAIN, J. The action is on an alleged contract for the sale of certain ice stored in defendant's icehouse at Dakota City. At the time of the making of the contract of sale, if one was made, plaintiff resided at Humboldt, which adjoins Dakota City, and defendant at Evan, Minn., and plaintiff sought to make out the alleged contract by letters and telegrams which passed between the parties. One contention of defendant, in his motion to direct a verdict, was that it appeared from the letters and telegrams on which plaintiff relied that the plaintiff was acting in the transaction as the agent of the defendant to effect a sale of the ice, and not as a proposed purchaser in his own right, and the action of the court in sustaining the motion may have been based on this ground. It is necessary, therefore, to set out briefly the communications which passed between the parties so far as they throw light on this question. Two letters from defendant to plaintiff with reference to a possible sale of the ice, written in July, 1901, are in evidence, one of which apparently refers to plaintiff as negotiating for the purchase of the ice; but, as they were written in response to letters which were not introduced in evidence, they do not throw much light on the question as to the relations between the parties. But on the 4th of August following plaintiff wrote to defendant a letter in which he said: "If you can afford to make a price of $1 per ton, in ten ton lots, or larger, and $1.25 in smaller lots than ten tons, I will do my best to sell it for you. Will have ice weighed on wagon scales, and send you the tickets;" to which letter defendant replied on the 10th of the same month: "Until further notice you may sell ice at the prices mentioned in your letter;" and plaintiff responded: "I will do my best with the ice. Weather very cool here now. Don't know how much difference it will make. Please advise me where I can get key, and order holder to deliver it to me. Also I must have a few days' notice, if you change your mind, so I can fill any orders on hand." Thereupon defendant gave to plaintiff a written order for access to the icehouse, "in case you secure any orders for ice." It seems to us unquestionable that at this stage of the negotiations it was clearly understood between plaintiff and defendant that plaintiff was to sell the ice for defendant, if he could, at the price named, and that any sales he should make would be sales as the agent of defendant, and not on his own account. In other words, while it is argued, and not without plausibility, that the plaintiff was negotiating for the purchase of such quantities of ice as he might be able to resell on his own account and profit, and on such terms as he should see fit, nevertheless we think the trial court was justified in the interpretation of this correspondence as showing an agency, and not an offer of sale. The subsequent negotiations between the parties must be interpreted in the light of the situation thus revealed. On the 20th of the same month plaintiff telegraphed defendant: "Have offer for all; quick acceptance; net you 75c ton; shall I accept? Answer quick;" to which defendant responded on the same date by telegram: "Other negotiations pending; $1 net is the limit." But on the 24th defendant wrote plaintiff a letter, which was received by the latter on the morning of the 25th, which was Sunday, as follows: "I have been unable to close sale I had pending, and will accept your offer of 75c. per ton net, in case you are in a position to make the sale at this date. In case offer is still open, wire me at once your acceptance, that I may call off other negotiations." And immediately on the receipt of this letter plaintiff replied by telegram: "Will take the ice; commence loading Monday; will weigh and settle promptly." It appears that on Saturday, after defendant had written the letter above referred to, he wrote another letter, withdrawing his proposition, which, as the evidence tends to show, did not reach the plaintiff until Monday evening, and that defendant consistently refused from that time on to consider that there was any offer outstanding which plaintiff could accept. It appears also that plaintiff on Monday, before receiving defendant's letter canceling the offer, sent defendant two other telegrams, indicating that he claimed to have become the owner of the ice, and to be entitled to take possession of it; these telegrams being occasioned by the fact that the person who had charge of the icehouse for defendant refused to allow plaintiff to take the ice. The question is argued whether the transaction amounted to a Sunday contract in such sense as to be illegal, the position of appellant being that although the acceptance on Sunday did not in itself make a valid contract, yet that an acceptance on Monday was in time, and that by indicating to defendant by telegram, before defendant's withdrawal of the offer had been received, that plaintiff still insisted upon his formal acceptance indicated on Sunday, the contract of sale became complete and binding. We do not discuss this question, for the reason that we regard the offer made by defendant to plaintiff on Saturday to be merely an acceptance of the proposition by plaintiff to sell the ice on the terms specified, as defendant's agent, and therefore the acceptance by plaintiff as a purchaser in his own right would not be responsive to the offer, and would not constitute a contract.

A further consideration occurs to us as being important. The offer made by defendant to plaintiff on Saturday, and received by plaintiff on Sunday morning, did not specify time of payment, and therefore it would be presumed that payment was to be in cash on delivery. Plaintiff's acceptance, however,

Digitized by Google

was not of such a contract, but his proposition was to "weigh and settle promptly." Therefore, even though the offer was of a sale, and not of authority to sell, there was not such acceptance as to constitute a binding contract.

Further, if it should be contended that plaintiff's telegram of August 20th was an offer to purchase, and not to act as agent, still the sale to plaintiff was not valid, assuming that the relation between the parties prior to that time had been that of principal and agent, for the reason that plaintiff, as agent, was concealing from the principal, the defendant, material facts, to wit, that the price of ice at Humboldt and Dakota City was rapidly advancing by reason of continued hot weather and diminished ice supply. As a matter of fact, plaintiff, when he made the proposition to defendant with reference to the sale by defendant of his ice at 75 cents per ton, had already a proposition for the purchase thereof from a proposed customer at twice that price, and on Monday the current price was still higher. While it is true that one who has been acting for another as agent for the sale of property may himself become a purchaser, it is also elementary that he must, in doing so, act in good faith, and advise his principal fairly and fully with reference to all matters affecting the value of the property.

The view we take as to the proper interpretation of the correspondence as bearing on the question whether or not plaintiff was the agent of defendant for the sale of this ice makes it unnecessary to consider any other question. The judgment of the lower court is affirmed.

ALLEN v. ELMORE.

(Supreme Court of Iowa. Oct. 13, 1903.)

SALE—PASSING OF TITLE—ASCERTAINMENT OF QUANTITY.

1. Title to a certain lot of hay in a barn passes by a sale, by the ton, on credit, with privilege of allowing it to remain a while, so that the purchaser is liable for the purchase money, to be ascertained by the best evidence, where, by accident and without fault of the seller, the hay was burned after it might have been, but before it was, removed, though it was to have been weighed as removed to ascertain the amount.

Appeal from District Court, Adams County; H. M. Towner, Judge.

Action for purchase price of a quantity of hay sold at public auction to the defendant. Trial to the court without a jury. Judgment for plaintiff. Defendant appeals. Affirmed.

T. J. Mahony and Sullivan & Sullivan, for appellant. Maxwell & Maxwell, for appellee.

McCLAIN, J. At an auction sale of plaintiff's stock and farm produce certain hay in a mow was offered, with an announcement that it would be sold in five-ton lots, with the privilege to the successful bidder for any lot of taking a larger quantity at the same price, if he should see fit. Under this arrangement defendant was the successful bidder for the first lot, and announced his election to take all of the hay offered at the same price. Some question was raised as to how the quantity should be ascertained, and it was agreed that it might be weighed, as taken away, on a neighbor's scales, and, further, that the buyer might allow it to remain in plaintiff's mow until the same was needed for the storing of the next crop. The buyer paid a portion of the purchase price in cash, and by the terms of the sale he was to have time for payment of the balance. Before any of the hay was removed it was destroyed by accidental fire, without any fault on the part of plaintiff. Under these facts, the simple question was whether the title to the hay had passed, so that the defendant as purchaser became liable for the price.

The only objection made by counsel for appellant with reference to his liability is based on the fact that the quantity of hay had not been ascertained at the time of its destruction, and that weighing was still necessary to determine the purchase price to be paid. It is true that, so long as anything remains to be done between the parties to ascertain and identify the particular property which is to pass, the sale is not complete. McClung v. Kelley, 21 Iowa, 508; Snyder v. Tibbals, 32 Iowa, 447; Welch v. Spies, 103 Iowa, 389, 72 N. W. 548. But, as explained in Welch v. Spies, supra, which discusses the earlier Iowa cases on the subject, if the property has been identified so that the transaction relates to a specific and ascertained chattel, then the question is one of intent, and the fact that something remains to be done by the buyer, such as weighing or measuring, for the purpose of determining the price to be paid, does not prevent the transaction being a completed sale, under which the title passes to the buyer, accompanied with the risk of the loss or destruction of the property without the seller's fault. The rule supposed to have been recognized in some of the earlier English cases, to the effect that there could be no passing of title until the purchase price had been definitely determined by weighing or measuring, when necessary, based, as it was, apparently on the idea that the action for the purchase price must be for a specific sum, definitely ascertained, has not been generally approved by the courts in this country, and it has been held by the great weight of authority that where the payment of the purchase price was not a condition to the passing of title—that is, where credit for the price was given—the fact that weighing or measuring still remained necessary to determine the price would not indicate an intention that the title should not pass until such acts were done; it being assumed, of course, for the purpose of applying this rule, that the specific goods were definitely ascertained

Digitized by Google

and agreed upon. Riddle v. Varnum, 20 Pick. 280; Crofoot v. Bennett, 2 N. Y. 258; Cunningham v. Ashbrook, 20 Mo. 553; Upson v. Holmes, 51 Conn. 500; Sanger v. Waterbury, 116 N. Y. 371, 22 N. E. 404; Adams Mining Co. v. Senter, 26 Mich. 73; Ober v. Carson's Executor, 62 Mo. 209; Haxall v. Willis, 15 Grat. 434; Sedgwick v. Cottingham, 54 Iowa, 512, 6 N. W. 738. And, whatever may have been the earlier views of the English judges, that is now the rule in England. Martineau v. Kitching, L. R. 7 Q. B. 436. This is the view stated by the American text-books. See Mechem on Sales, §§ 519–524; Burdick on Sales, p. 55.

Even if, as is stated in some cases, the question is one of intent, for the jury, we have in this case the conclusion of the trial court, entitled to the same weight as the verdict of a jury, that such was the intent, and the finding is amply supported by the evidence. It is perfectly clear from the record that the hay was allowed to remain in the plaintiff's mow for the convenience of the defendant; that the defendant had the right to take it away whenever he saw fit; that he might, under the terms of the contract, have taken it away before its destruction and before payment of the balance of the price; and that weighing to ascertain the amount to be paid was to be done by him as the hay was removed. It is true that, by the destruction of the hay before its removal and weighing, the ascertainment of the quantity by weighing was rendered impracticable; but, the sole question being as to the amount to be paid, the quantity must be ascertained by the best evidence available, and there was evidence from which the trial court was able to determine the quantity and fix the amount to be paid.

The judgment of the trial court was correct, and it is affirmed.

MEDART PATENT PULLEY CO. v. DUBUQUE TURBINE & ROLLER MILL CO.

(Supreme Court of Iowa. Oct. 13, 1903.)

CONTRACT TO FURNISH MACHINERY—DELAY IN PERFORMANCE—WAIVER OF RIGHT TO DAMAGES—PAYMENT IN FULL—EFFECT.

1. Where plaintiff agreed to furnish certain machinery within a fixed time, but failed to perform its contract in time, and defendant accepted the same when subsequently tendered, the fact of defendant's acceptance was not in itself a waiver of its right to demand damages for the delay which it could insist on in reduction of the contract price.

2. Where plaintiff agreed to furnish certain machinery within a fixed time, but failed to do so, and defendant accepted the same when subsequently tendered, and defendant, after plaintiff's refusal to allow any damages for the delay, paid the price, with knowledge that a third person might demand damages for the delay caused by the failure to receive the machinery in time, defendant could not, in an action by plaintiff for the price of machinery subsequently sold, set up, by way of a counterclaim, the damages sustained by such delay.

Appeal from District Court, Dubuque County; Fred O'Donnell, Judge.

The opinion states the case. Reversed.

Henderson, Hurd, Lenehan & Kiesel, for appellant. McCarthy, Kenline & Roedell, for appellee.

WEAVER, J. In the year 1899 the defendant, having a contract for the erection of an electric light and power plant at Mauston, Wis., ordered certain materials and machinery from plaintiff, a company doing business in St. Louis. Plaintiff undertook to fill the order within a certain limited period, but failed to do so until a considerably later date, by reason of which defendant claims to have been injured. This failure of plaintiff to perform its contract within the agreed time, and defendant's claim for damage, was the subject of considerable correspondence between the parties, defendant refusing to pay the remainder of the purchase price until a settlement of its claim could be had. Finally, on March 20, 1900, and after plaintiff had distinctly refused to make any allowance or payment of damages, defendant remitted to plaintiff the entire balance of the bill, without making any deduction on account of its counterclaim for damages, the remittance being accomplished by a letter, as follows: "Medart Patent Pulley Co., St. Louis, Mo.—Gentlemen: We have just succeeded in getting freight bills so that we could estimate the extra cost of freight on the machinery that was shipped to Mauston over what it would have cost to have delivered it from here, and the difference is only a few dollars, and we will say nothing about it. We have not yet got a settlement with the parties, and do not know whether they are going to keep back anything from us on account of the delay in shipping the shafting or not. They were in very ill humor, and indicated that they would do so at the time, but as they have not put in any claim, we shall pay your bill, and trust to your doing the fair thing by us if we should suffer any loss on account of the delay. We understand they have kept the base plates, so we send you the amount in full. Respectfully yours, Dubuque Turbine & Roller Mill Co." Thereafter, in July, 1900, defendant ordered other machinery and materials from plaintiff, and, failing to make payment therefor, this action was brought to recover the agreed price. To this action the defendant appeared, admitted the indebtedness sued upon, and pleaded a counterclaim for damages based upon the first transaction, the history of which is above given. In support of the counterclaim it alleges that at the time it made payment for said first purchase it was not yet known whether the party for whom the defendant had erected the light and power plant at Mauston, Wis.,

Digitized by Google

would insist upon any damages by reason of the delay in the completion of such work, and that such fact did not develop until some time in April, 1900, when such claim was presented, and defendant company was compelled to pay, and did pay, in satisfaction thereof, the sum of $147.75. Plaintiff demurred to the counterclaim on the ground that from the statements contained in the pleading and in the correspondence thereto attached it appears that a complete settlement, accord, and satisfaction has been had between the parties concerning the matters involved in such claim, and that, payment having been made with full knowledge of all the material facts in the case, defendant has thereby waived the right to demand damages. The demurrer being overruled, and plaintiff electing to stand thereon without further pleading, the court entered judgment allowing the counterclaim in the sum of $147.75, and plaintiff appeals.

1. Under the admitted circumstances, can the defendant, after voluntarily paying in full for the machinery and materials purchased upon the first order, make the delay in their delivery the basis of counterclaim or set-off to an action for the price of other machinery and materials subsequently ordered? Acceptance and use of goods after the date specified therefor in the order have been held to defeat a claim for damages on account of such delay. Fraser v. Ross (Del. Super.) 41 Atl. 204; Toplitz v. King B. Co. (Sup.) 46 N. Y. Supp. 418. The better doctrine, and the one most generally prevailing, is that while such acceptance and use are evidence from which, with other circumstances, a waiver of the claim may be found, yet, ordinarily speaking, the purchaser may accept the delayed delivery, and recoup the damages, if any, in an action by the vendor for the purchase price. Hansen v. Kirtley, 11 Iowa, 565; Jeffrey & Co. v. Central Co. (C. C.) 93 Fed. 408; Ramsey v. Tully, 12 Ill. App. 463; Ruff v. Rinaldo, 55 N. Y. 664; Merrimack Co. v. Quintard, 107 Mass. 127. Under this rule, the defendant's acceptance of the belated delivery was not in itself a waiver of its right to demand damages, and it could have rightfully insisted upon an allowance thereof in reduction of the contract price. Of this right it did not avail itself. In its correspondence with plaintiff, extending from November, 1899, to March, 1900, the matter of defendant's claim for damages, accrued and prospective, on account of plaintiff's delay in filling the order, was a matter of disagreement and dispute. In the end defendant yielded the point, and paid the bill in full, simply expressing its reliance upon the plaintiff to "do the fair thing" in the event of its being required to suffer loss on account of the delay. The payment was voluntary, and was made with all the knowledge of the material facts. True, defendant did not yet know whether damages would be exacted by the party for whom the light and power plant was constructed, but it did know all the facts on which its liability for such damages was based. It is a familiar principle that money so paid, even though it be upon an unjust or unfounded demand, cannot be recovered back. Boston & S. Glass Co. v. Boston, 4 Metc. (Mass.) 181; Muscatine v. K. & N. L. P. Co., 45 Iowa, 191; Murphy v. Creighton, Id. 179; Baldwin v. Foss, 71 Iowa, 389, 32 N. W. 389.

It is urged, however, that the case before us does not come within the rule of the authorities cited. The point made is that defendant's counterclaim is in the nature of an affirmative cause of action, which had not fully developed when the payment was made, and cannot be presumed to have been thereby settled or waived. As already suggested, every fact on which defendant's liability to its customer was based was fully understood, and the money was paid over with express knowledge that such liability existed and might yet be enforced. Payment was made under no mistake as to the true situation, except, perhaps, in defendant's estimate of plaintiff's willingness to do what is denominated "the fair thing," should damages be exacted by the Mauston company. Mistakes of that kind are not unusual, but do not ordinarily furnish ground of legal or equitable relief. Applying the rule above stated, it has been said the fact that the party may be under embarrassment as to the amount which he should withhold or might properly be claimed as rebate from the contract price does not affect the principle. It was his right to litigate the question with the creditor, and his election to pay the full amount rather than to resist the payment of any portion of it makes the payment a voluntary one. Regan v. Baldwin, 126 Mass. 487, 30 Am. Rep. 689.

This conclusion is rendered still clearer when we consider the nature of the damages asserted by the defendant. Its right to such damages rests upon the right of recoupment as distinguished from "set-off," in the technical sense of that term, and from a statutory counterclaim based upon an independent cause of action. That the right to damages for delay in delivery of property sold is a right to recoup the same from the contract price, see Schweickhart v. Stuewe, 71 Wis. 1, 36 N. W. 605, 5 Am. St. Rep. 190. Recoupment is, as the word implies, the cutting out or reduction of a part of a creditor's demand, and is based upon some failure of the creditor to comply with the terms of the contract out of which the debt sued upon arises. See "Recoup," Anderson's Law Dict. It goes directly to the amount due the plaintiff. The defendant, asserting such right, does not admit his indebtedness to plaintiff, and seek to set off against it an indebtedness due from plaintiff to himself. He insists that plaintiff has in some material respect failed to perform his part of the contract on which the suit is based, and that by reason of such

Digitized by Google

failure he has never become indebted to plaintiff to the full amount of the agreed price. His counter demand goes directly to the amount due the plaintiff, and, while perhaps not strictly a defense, it has often been spoken of as such, or, at least, as a partial defense. McCullough v. Cox, 6 Barb. 386; Still v. Hal, 20 Wend. 51.

In Lufburrow v. Henderson, 30 Ga. 482, recoupment of damages in such cases is spoken of as being an "improvement upon the old doctrine of failure of consideration. It looks through the whole contract, treating it as an entirety, and treating the things done and stipulated to be done on each side as the consideration for the things done and stipulated to be done on the other. When either party seeks redress for the breach of stipulations in his favor, it sums up the grievances on each side instead of the plaintiff's side only, strikes a balance, and gives the difference to the plaintiff, if it is in his favor." When the plaintiff herein demanded payment of the first bill, its right to receive or enforce collection of the full amount depended upon its ability to prove performance of the contract on its part. If it had not so performed, it had not furnished the consideration upon which defendant had promised to pay, and was entitled to demand and receive, not the full contract price, but the contract price reduced by the damages which its default had occasioned to the defendant. Its insistence upon the full contract price was, upon defendant's theory at least, unjust and excessive. Defendant was fully aware of the injustice, and for a time refused payment, but in the end did pay and satisfy the demand upon plaintiff's terms. As said by us in Baldwin v. Foss, supra, the party who would resist an unjust claim "must do so at the threshold. The parties treat with each other on equal terms, and if litigation is intended by the party of whom money is demanded it should precede payment." In Reid v. Field, 83 Va. 26, 1 S. E. 395, the seller of goods failed to make a delivery within the time specified. After this breach of the contract the purchaser received the goods, and gave his promissory note for the agreed price. This was held a waiver of his claim for damages, and the same could not be made the basis of a counterclaim in an action upon the note. To the same effect, see Minneapolis T. M. Co. v. Hutchins, 65 Minn. 89, 67 N. W. 807; Roby v. Reynolds, 65 Hun, 486, 20 N. Y. Supp. 386. In short, the party who questions or denies the justice of a demand upon him for the payment of money has his choice to make voluntary payment, and thus avoid further trouble and annoyance on that score, or to resist, and take the judgment of a court of competent jurisdiction upon the controversy. If he adopts the former course he is bound by it, and cannot thereafter have recourse to the latter. It follows from the foregoing discussion that the demurrer to the defendant's counterclaim should have been sustained.

2. On plaintiff's motion the trial court struck from defendant's answer the allegation that at the time of paying the contract price upon the first order for machinery and materials defendant "did not know how much, if any, damages the Mauston Electric Light & Power Company might claim or be able to establish against the defendant," etc. From this order defendant has appealed, but we think it unnecessary for us to consider the question thus raised. In disposing of the principal appeal we have treated the answer as containing the allegation ordered stricken out, and if there was any error in the ruling it was without prejudice.

The judgment of the district court is reversed, and cause remanded for further proceedings in harmony with this opinion. Reversed.

KENNEDY v. NILES.

(Supreme Court of Iowa. Oct. 13, 1903.)

DIVISION LINE—EVIDENCE—FENCES—OCCUPATION—ACQUIESCENCE—NECESSARY PARTIES.

1. The existence of a fence for 16 years, marking the dividing line between platted lots, and probably located before the platter's stakes were destroyed, is better evidence of the true division line than the computation of surveyors, on the supposition that all the lots were of like proportions.

2. Occupancy for the statutory period of limitations, up to a division line marked by a fence, without question of its correctness, is acquiescence therein, preventing a subsequent claim that it is not the true line.

3. To a suit as to the division line between the parties, a third person is not a necessary party merely because the division line between him and one of the parties is incidentally involved.

4. Mere objection by defendant to plaintiff's erection of his house close to hers is enough to avoid the charge of acquiescence in such erection.

Appeal from District Court, Linn County; H. M. Remley, Judge.

The defendant, prior to February 28, 1898, was owner of lot 3 in block 18 in that part of Cedar Rapids formerly known as Kingston, and on that day conveyed the westerly 30 feet thereof to the plaintiff. Thereafter the latter erected a dwelling house on said 30 feet of ground, so close to defendant's that the eaves extended over hers. Plaintiff employed a surveyor, who discovered that the front end of the wall under defendant's house extends over the line between them to the west 1½ inches, but that the hind end is 3 inches east of the line. This resulted from a previous discovery that the division fence, which had marked the line between lot 3 and lot 4 to the west, was over on lot 4 $1^{3}/_{10}$ feet in front and $1^{4}/_{10}$ feet at the alley. These discoveries were confirmed by another surveyor employed by defendant. The result

¶ 2. See Boundaries, vol. 8, Cent. Dig. §§ 235, 237.

Digitized by Google

is this suit, in which plaintiff asks that her title be quieted to all land 30 feet east of the alleged true line. The defendant first asserts that she merely sold the vacant land west of her house, and prays that the deed be reformed accordingly. She further insists that the fence marks the true division between lots 3 and 4, and that the 30 feet sold should be measured from that. This was the view taken by the district court, and from its decree the plaintiff appeals. Affirmed.

Deacon & Good, for appellant. Powell & Powell, for appellee.

PER CURIAM. The evidence shows conclusively that the fence had marked the boundary between lots 3 and 4 for more than 16 years. During that time the lots had been occupied, and no one had ever questioned that it indicated the true division line. If parts of the fence had been rebuilt or repaired, it continued at the place where first located. The surveyors, of course, paid no attention to old fences or the location of houses, even though the monuments of the original survey when the town was platted were no longer to be found in that part of the city. From what they designate as recognized monuments they found the block corner, and, assuming that every lot in the block must necessarily be the same size of every other, proceeded to divide the block into lots, according to their own notion of how it should have been done originally. However, the law did not require that the block be so divided, and the existence of this fence for so long a time, probably located before the platter's stakes had been destroyed, is better evidence of the true division line than the computation of these surveyors, or the supposition that all lots were of like proportions. Moreover, this court is fully committed to the doctrine that occupancy up to a marked division line, without questioning its correctness, for the statutory period of limitation, is such acquiescence therein as to defeat subsequent controversy as to its true location. See, among others, Burdick v. Helvly, 23 Iowa, 514; Miller v. Mills County, 111 Iowa, 659, 82 N. W. 1038; O'Callaghan v. Whisenand (Iowa) 93 N. W. 579.

To the objection that the owner of lot 4 was not made a party it is to be said that he had no interest in the boundary between the parties to this suit, and the mere fact that the division line between his lot and lot 3 was incidentally involved did not render him a necessary or proper party to the action. Klinker v. Schmidt, 106 Iowa, 71, 75 N. W. 672.

Contrary to appellant's contention, the evidence shows that defendant objected to the construction of the house close to hers. True she says she made no protest (evidently misunderstanding the use made of that word), but she did object, and that was sufficient to avoid the charge of acquiescing in the erection of the house in close proximity to her own. As the deed was not reformed, that phase of the case demands no attention. We merely say enough to indicate our views, without intending to fully review the evidence or arguments, for the record raises no question which we deem fairly debatable.

Affirmed.

SHELDON MAIL et al. v. O'BRIEN COUNTY DEMOCRAT et al.

(Supreme Court of Iowa. Oct. 13, 1903.)

APPEAL—PARTIES—DISMISSAL.

1. An appeal will be dismissed for lack of parties, the Sheldon Mail, named in the notice of appeal as the only appellant, and the O'Brien County Democrat, to whom the notice of appeal is addressed, not being corporations, but the names of papers; one published by an individual, and the other by a partnership.

Appeal from District Court, O'Brien County; Wm. Hutchinson, Judge.

Appeal from the action of the board of supervisors of O'Brien county in selecting the official newspaper of said county. Judgment in the court below in favor of defendants. The Sheldon Mail appeals. Dismissed.

Milt. H. Allen, O. H. Montzheimer, and J. L. E. Peck, for appellant. P. R. Bailey and E. C. Herrick, for appellees.

PER CURIAM. It appears without dispute that the Sheldon Mail is a newspaper published at Sheldon, O'Brien county, by a partnership, the firm name being Piper, Miller & Ayres. The O'Brien County Democrat is a newspaper published at Primghar, in said county, by H. B. Waite. Said partnership of Piper, Miller & Ayres and said H. B. Waite were parties to the appeal from the board, and appeared in the court below. The notice of appeal to this court is addressed to the O'Brien County Democrat and to the clerk of the district court alone. It recites that the Sheldon Mail has appealed, etc. It is signed by the attorneys for the Sheldon Mail, and service thereof is accepted by the attorneys for the O'Brien County Democrat only. The appellees now move to dismiss the appeal, on the ground that there are no proper parties before the court. It is clear that the motion must be sustained. The Sheldon Mail, which is named as the sole appellant, is not a corporation or a legal entity of any character, capable of prosecuting an action or an appeal. It is made to appear that the name is simply that of a newspaper published by the partnership named above. So, too, the O'Brien County Democrat is but the name of a newspaper, and does not represent any legal entity, capable of appearing as a party to any legal proceeding. It follows that, having no parties before us, there is no appeal, and we have nothing to determine.

Dismissed.

Digitized by Google

WILLIAMS v. IOWA CENT. RY. CO.

(Supreme Court of Iowa. Oct. 14, 1903.)

INJURY TO RAILROAD EMPLOYÉS—INSTRUCTIONS.

1. An instruction, in a personal injury action by an employé against his employer, that, in order to recover, plaintiff must establish "all the material allegations of his petition," was objectionable, as leaving the jury to determine what allegations of the petition were material.

2. It also imposed on plaintiff a greater burden than he was required to bear, it not being essential to a recovery to prove the allegations of the petition with reference to the extent and nature of the injury sustained.

3. Instructions submitting to the jury matters concerning which there is no controversy in the evidence are improper.

4. Code, § 2071, providing that railroad companies shall be liable to their employés for damages resulting from the negligence of their agents and servants when connected with the use and operation of any railway, renders them so liable to any employé engaged in work exposing him to the hazards arising from the operation of a railroad.

5. A servant employed by a railroad company in unloading rails from a car in a repair train by means of a cable was connected in his employment with the use and operation of the company's railway within Code, § 2071, relating to the liability of railroad companies for the negligence of employés.

6. In an action by a servant employed with others in unloading rails from a car in a repair train, an instruction that, if plaintiff gave the signal to move the train, and as a result of such movement he was injured, he could not recover, was erroneous, as ignoring the question of due care for his safety by his associates, and due care on his own part in giving the signal.

Appeal from District Court, Mahaska County; W. G. Clements, Judge.

Action at law to recover damages for personal injuries sustained by plaintiff while in defendant's service. Verdict and judgment for defendant, and plaintiff appeals. Reversed.

Carver & Wooster and Rickel, Crocker & Tourtellot, for appellant. George W. Seevers and J. O. Malcolm, for appellee.

WEAVER, J. Plaintiff claims that in the year 1899 he was in the employ of the defendant corporation, assisting in the operation of a construction or repair train, and that in pursuance of such service he undertook, with others, to distribute steel rails along the defendant's track. The unloading was accomplished by the use of two cables, one end of which was clamped to the track and the other hooked to a rail on the car, after which the train was moved forward, pulling the rail from the load. At the time in question the iron was being unloaded from a stock car, and two men riding in the car were charged with the duty of placing the rails in proper position to be hooked and drawn through the door or opening. Other men attended to the clamps at the rear end of the cables, while plaintiff and another unloosed the hooks from the unloaded rails, and carried them forward to repeat the process. Plaintiff alleges that while he was thus engaged the men in the car failed to use reasonable care in placing and preparing one of the rails for unloading, and that by reason of such negligence the rail, when hooked, caught in the end of the car, causing the hook to slip from its fastening and fly back with great violence, striking and injuring him, without fault on his part. The defendant admits its corporate capacity, denies plaintiff's claim, and alleges that by his own negligence he caused or contributed to the injury of which he complains. Upon the trial there was no dispute that plaintiff was employed substantially as above stated, or that he was injured by the recoil of the hook as alleged. There was a dispute, however, as to whose duty it was to attach the hook, and who in fact attached it at the time of the accident, and also as to the matter of signals for moving the car—whether any were given, and, if so, by whom given.

It is not seriously contended that the evidence failed to present a fair question for the jury, and the only errors discussed in argument are assigned upon the instructions given by the court. Among the instructions objected to we note the following:

"Par. 2. Under the issues thus joined, before the plaintiff can recover, he must establish all the material allegations of his petition by a preponderance of the evidence, according to the rules set forth in these instructions."

"Par. 5. Before the plaintiff can recover, he must establish by a preponderance of the evidence the following propositions: First. That plaintiff was in the employ of the defendant, and that such employment was connected with the use and operation of the defendant's railway at the time of the accident. * * * Fifth. That the plaintiff, in the performance of his duties at the time of the accident, exercised ordinary care and prudence, and did not in any manner contribute to his own injury. If each of the foregoing propositions are established by a preponderance of the evidence, then your verdict should be for plaintiff, and, if the plaintiff has failed to satisfy you by a preponderance of the evidence as to any one of these five propositions, then your verdict should be for the defendant."

"Par. 11. If you do not find that it was the duty of plaintiff to give the signal to the conductor to start the train, and you find that the plaintiff did not give such signal to the conductor to start the train at the time of the accident, and you find that the plaintiff handed the hook to the employés in the car, and by them hooked in the rail, or you find that plaintiff himself placed the hook in the rail, and you further find that it was the duty of the men in the car to place the rail in a position in the car so that it would pass out of the car unobstructed, and such men

¶ 4. See Master and Servant, vol. 34, Cent. Dig. § 863.

Digitized by Google

in the car failed and neglected to exercise ordinary care and caution in placing such rail, and they were negligent in so doing, and you further find that such employés in the car gave the signal to the conductor to start the train, and such conductor acted on such signal, and gave the signal to engineer to start the train and the train was thereby started, yet it was the duty of the plaintiff to exercise ordinary care and caution; and if the plaintiff, by the exercise of ordinary care, could have observed and ascertained that the rail would not pass out of the car in time to have gotten out of the way of danger, or in time to have notified the conductor that the rail would not pass out of the car, and thus have avoided the accident, and the plaintiff failed and neglected to do so, then the plaintiff would be guilty of negligence directly contributing to his own injury. But if you should find from the evidence that such a state of facts existed as stated above in this instruction, and you further find that such person in the car, giving such signal, if any, or other employés in the car, knew that the plaintiff was negligent, and knew that he had not exercised such ordinary care and caution, and knew that the circumstances were such as to indicate a strong probability that the plaintiff or some other person would get hurt, it would be the duty of such person or persons in the car having such knowledge, if any, to do whatever he or they could, with ordinary promptness, to avert the accident, after he or they saw that the plaintiff or other person was in danger of getting hurt; and in such event, if he or they failed to use reasonable means with reasonable promptness to avert the accident, this would be negligence on their part, which would make the defendant liable, even though the plaintiff may have been first negligent as stated in this instruction. But if the circumstances were not such as to suggest immediate danger to any person, or if it was reasonably apparent to such employé or employés that nothing could be done in time to avert the accident, after they discovered such negligence of the plaintiff (if they did discover it) and saw the danger, then, in either event, there would be no negligence of the employé or employés in the car, in not attempting to avert the accident."

After deliberating upon their verdict several hours, the jury returned into court with a written interrogatory as follows: "To the Court: Your instructions are not clear. We all agree that plaintiff and defendant were negligent. Section 5 of your instructions states that if we find plaintiff guilty of negligence we must find a verdict for defendant. Section 11 states that, if plaintiff was guilty of negligence and defendant had time to avert accident, then the plaintiff can recover. Are not these contradictory?" In response to this question the court gave an additional instruction as follows: "Gentlemen of the jury, to your written inquiry in regard to instructions number five and number eleven you are instructed that the fifth proposition embodied in instruction number five is qualified by instruction number eleven, should you find that the facts existed as stated in instruction number eleven." Later, and after still further deliberation, the jury again returned into court, repeating their complaint of inability to reconcile the instructions given in paragraphs 5 and 11 of the charge, and asking still further direction. Thereupon the court repeated in substance its former explanation of these paragraphs, and added the following: "If you find from the evidence the plaintiff himself gave the signal to move the train, and in obedience thereto the train was moved, and the plaintiff thereby received the injury of which he complains, then, and in that event, he is responsible for the result of such movement, and he cannot recover in this action."

While there is much in these several paragraphs of which appellant cannot justly complain, we cannot avoid the conclusion that the jury were in some respects misdirected.

1. By the second paragraph of the charge the jury were told that, in order to recover, plaintiff was required to establish "all the material allegations of his petition." This instruction is objectionable for two reasons: It leaves the jury to determine for themselves what allegations of the petition are material, and it imposes upon plaintiff a greater burden than he was required to bear. For instance, the petition, after alleging his injury in the manner we have described, proceeds to aver that in consequence thereof he has been made to undergo great pain and suffering, and to incur expense for medical attendance and nursing; that he is still laboring under the disability thus occasioned, and is liable to sustain further loss and suffering therefrom in the future. Now, these allegations are material, and are not improperly pleaded; but plaintiff is not required to prove the truth of all of them before he can recover. If he establishes the alleged negligence of the defendant, and consequent injury to himself without contributory fault on his own part, then his right of recovery is complete, although the jury may believe he has fully recovered, and there is no probability of future loss, pain, or suffering, or although he fails to show the employment of physician or nurse. The same suggestion may properly be made as to many other allegations of the pleadings, failure to prove which would not necessarily defeat plaintiff's right of recovery. See Kaline v. Stover, 88 Iowa, 245, 55 N. W. 346; Maichen v. Clay, 62 Iowa, 455, 17 N. W. 658; Harley v. Merrill Brick Co., 83 Iowa, 73, 48 N. W. 1000. The second paragraph of the charge, to which we have just referred, and the first subdivision of the fifth paragraph, are also open to the criticism that they submit to the finding of the jury matters which are conceded, or concerning which

Digitized by Google

there is no controversy in the evidence. That plaintiff "was in the employ of the defendant, and that such employment was connected with the use and operation of the defendant's railway," was not a matter of controversy; and, if the jury had specially found in the negative upon either proposition, the finding must have been set aside, as being manifestly unsupported by the evidence.

2. With further reference to the first clause of the pargraph it may be observed that, to entitle plaintiff to the benefit of Code, § 2071, he was not required to prove his employment to have been connected with the use and operation of the railway. Even though his employment may have had nothing whatever to do with the movement of trains, yet, if the performance of his duties brought him into a situation where he was exposed to the perils and hazards arising from such operation or movement, and he was thus injured by the negligence of a coemployé, he is within the protection of the statute. Pyne v. R. R., 54 Iowa, 223, 6 N. W. 281, 37 Am. Rep. 198; Keatley v. R. R., 94 Iowa, 691, 63 N. W. 560; Jensen v. R. R. (Iowa) 88 N. W. 952. It was error, therefore, as an abstract proposition of law, to direct the jury that plaintiff could not recover without showing his employment to have been connected with the operation of the road; but, as we hold that his employment was of that character, the error was not of itself prejudicial, and we should not be disposed to reverse upon that ground alone.

3. The eleventh paragraph of the charge attempts to collate the facts and circumstances bearing upon the question of contributory negligence, and to instruct the jury as to their effect upon plaintiff's right of action. In its commendable anxiety to make its résumé full and fair, the learned trial court seems to have been betrayed into some obscurity of statement. Indeed, it is hardly possible for any person to construct a sentence of such extreme length and multiplicity of subsidiary clauses having reference to technical matters, and succeed in making it so clear that a jury of nonprofessional men will be able to read and apply it with clear understanding. In the present instance the lack of clear comprehension by the jury was demonstrated by their repeated return into court asking further direction as to the effect of this particular paragraph. In giving such direction, the court, as we have seen, stated an additional proposition to the effect that, if plaintiff himself gave the signal to move the train, and as a result of such movement he was injured, then he was responsible for his own injury, and could not recover. This rule, we think, cannot be the law. It wholly ignores the question of due care for his safety by his co-employés, as well as due care on his own part in giving the signal. The mere fact that he himself gave the signal does not enable the court to say as a matter of law that he was guilty of contributory negligence. Whether it was or was not negligence, and, if negligence, whether it in any manner caused or contributed to the accident, depends entirely upon inferences to be drawn from the attendant circumstances; in other words, it was a question for the jury.

4. Other exceptions are urged to the instructions, but, in view of the conclusions already announced, it is unnecessary for us to further extend this opinion. This court is fully aware of the difficulties and embarrassments which surround trial courts in the preparation of instructions. Under the rule which requires the judge to remain in personal supervision of the trial in all its stages he is forced, if he would avoid delay, to prepare his charge at his desk, subject to constant interruption and distraction; and the chief cause for surprise is that so few prejudicial errors are committed. Many of the criticisms offered to the charge now before us are of a verbal or technical character. and we should be disposed to overrule most of them were it not that, taking the record as a whole, it seems very clear the jury became confused, and did not fully comprehend the rules of law laid down by the court. A new trial will therefore be ordered.

The judgment of the district court is reversed.

LUCAS v. WHITACRE.

(Supreme Court of Iowa. Oct. 13, 1903.)

ADVERSE POSSESSION—EXTENSION OF DOWER RIGHT—LIMITATION OF ACTIONS—PLEADING—DEMURRER.

1. Code, § 3366, provides that one-third in value of all estates in realty possessed by a husband at any time during marriage, and not sold under judicial sale, and to which the wife has made no relinquishment, shall be set apart as hers in fee simple if she survive. *Held*, that limitations do not run against a wife's action to enforce her dower rights until the death of the husband.

2. Adverse possession of land as against a husband does not operate to extinguish the wife's dower.

3. Where the petition of a widow for confirmation of title to her in certain lands of which her husband had been seised alleged that she was "the owner thereof," such allegation negatived the loss of her rights by sale of the land under judicial sale.

Appeal from District Court, Muscatine County; James W. Bollinger and P. B. Wolfe, Judges.

The plaintiff was married to Edward W. Lucas September 29, 1852, and lived with him as his wife until his death, which occurred December 17, 1900. On July 28, 1853. he and one Gilman Folsom acquired in severalty 39 acres of land in Muscatine county. She alleges her ownership of an undivided one-third of one-half thereof, and prays that

¶ 2. See Dower, vol. 17, Cent. Dig. § 97.

Digitized by Google

title thereto be confirmed in her. The defendant, in the first division of his answer, denied the ownership alleged, and in the second and third divisions pleaded that the land had been occupied by himself and grantors adversely for more than 40 years. A demurrer to the last two divisions was sustained, and on hearing decree was entered as prayed. The defendant appeals. Affirmed.

E. C. Nichols and Remley & Ney, for appellant. O. A. Byington and Titus & Jackson, for appellee.

LADD, J. Lucas was seised of an undivided one-half interest in the land, and lost title thereto through adverse possession. All this happened when husband of the plaintiff. Was she divested by such adverse possession of her inchoate interest therein, or is she entitled to a widow's distributive share in the property? Our Code (section 3366) provides that: "One third in value of all the legal or equitable estates in real property possessed by the husband at any time during the marriage, which have not been sold on execution or other judicial sale, and to which the wife has made no relinquishment of her right, shall be set apart as her property in fee simple, if she survive him." Prior to her husband's death her right was merely that of expectancy. It attached as an incident to the seisin of the husband during marriage. It could not be defeated or divested by any act or charge of the husband, or otherwise, save in the manner provided, though probably subject to proceedings to which all estates are held, such as eminent domain and the like. See Flynn v. Flynn, 171 Mass. 312, 50 N. E. 650, 42 L. R. A. 98, 68 Am. St. Rep. 427. But upon his death it became perfect, and related back, and comprised one-third of all real estate held by him during coverture. She could not be heard to assert title prior to becoming a widow, though the law will not wholly deny protection to even an inchoate interest in property. Buzick v. Buzick, 44 Iowa, 259, 24 Am. Rep. 740. The period of limitations is uniformly held to begin to run from the time a right of action accrues, and surely the wife cannot be said to have lost her inchoate right of dower by nonaction when she has been without power to save or protect it by suit. She could not have done so prior to her husband's death. and therefore the statute did not run against her. But is she bound by her husband's failure to protect his real property from the adverse claims of others? The language of the statute will not bear this construction. It is not the interest held by him at death, but at any time during coverture, in which she is awarded a share; and no act of omission or commission on his part can deprive her thereof save that which results from execution or other judicial sale. "The mere failure to sue for lands, of which he was legally seised during coverture, until the statute of limitations attaches against him," declared the court in Hart v. McCollum, 28 Ga. 478, "does not exclude the wife's right to dower in said lands—a right which she may assert when she becomes discovert." The same conclusion was reached in Durham v. Angier, 20 Me. 242; Moore v. Frost, 3 N. H. 126; Williams v. Williams (Ky.) 12 S. W. 760, 6 L. R. A. 637; Taylor v. Lawrence, 148 Ill. 388, 36 N. E. 74; Lucas v. White, 95 N. W. 209, and cases cited therein. Appellant cites numerous decisions to the effect that adverse possession extinguishes the right, and vests a perfect title in the adverse holder. But this language is invariably directed to the claim of a particular individual, and never toward one against whom adverse possession cannot be asserted. The vice of appellant's argument lies in the assumption that there has been adverse possession as to the wife. It would be absurd to say the statute could run against her in the absence of any provision for the protection of her right. Her right of action accrues the instant of her husband's death, and not until then does the period of limitation fixed by section 3447 begin. Nor can her inaction be construed a relinquishment when nothing she might have done could have tolled the running of the statute against her husband. Appellant has cited no authority sustaining his view of the law, and we have found none. We have no notion of amending the statute, and can only give it effect by holding that adverse possession of land seised by the husband in his lifetime will not cut off the wife's inchoate interest therein, but that she can maintain an action therefor after his death.

2. The petition did not, in terms, negative the loss of plaintiff's inchoate interest in the property by execution or other judicial sale, or by her own relinquishment, and it is urged that because of this omission the demurrer to the divisions setting up adverse possession as a defense should have been overruled. It is apparent from the facts alleged in the petition that plaintiff is claiming her distributive share in the property, and the allegation that she is owner thereof negatives its loss in the manner suggested. In a sense the averment of ownership is a conclusion, but no more so than would have been the statement that she had not been divested of her inchoate interest in any of the ways mentioned. It is generally treated as an averment of fact unless the context shows otherwise. Heeser v. Miller, 77 Cal. 192, 19 Pac. 375; Saline County Com'rs v. Young, 18 Kan. 445; Grace v. Ballou, 4 S. D. 333, 56 N. W. 1075; Gillett v. Robbins, 12 Wis. 329; 21 Ency. P. & P. 718; Ely v. Ry. Co., 129 U. S. 291, 9 Sup. Ct. 293, 32 L. Ed. 688. We think the argument of ownership under the circumstances sufficiently negatived the loss of her dower interest during coverture.

Affirmed.

Digitized by Google

DAILEY v. CHICAGO, M. & ST. P. RY. CO.

(Supreme Court of Iowa. Oct. 13, 1903.)

RAILROADS — KILLING STOCK — FAILURE TO MAINTAIN PROPER FENCES—WHAT CONSTITUTES RAILROAD FENCE—NEGLIGENCE—EVIDENCE—SUFFICIENCY.

1. A railway company built two fences on the north side of its track. The first fence, placed about a rod from the boundary of the right of way, was connected with a cattle guard at a street crossing, and was extended westward indefinitely. The second fence extended from the street forming the crossing along the boundary of the right of way westward for about 500 feet to a pasture, where it turned, and joined the first fence. At the pasture end of the lane thus formed was a gate opening into the pasture, while the street end of the lane was open. *Held*, that the first fence was a railroad fence, within Code, § 2055, making a railroad company liable for killing stock by reason of its failure to properly fence its track.

2. Live stock straying in the lane was stock running at large, within Code, § 2055, providing that any corporation operating a railway and failing to fence the same against live stock running at large shall be liable for the stock killed.

3. In an action against a railway company for killing a mule it was shown that the mule had been kept in a pasture at the end of a lane formed by two fences built by a railway company on its right of way; that at the pasture end of the lane was a gate leading into the pasture, while at the other end the lane was open at a street; that the day before the mule was killed it was in the pasture; that during the evening before it was killed it was seen in the lane; that it strayed from the lane on the track through a defective fence. *Held* sufficient to establish a prima facie case of negligence on the part of the company, shifting the burden on it to show its freedom from negligence.

4. In such a case it was not sufficient to negative the prima facie case of negligence to show that the mule was in a safe place the day before it was killed, or to indulge in the conjecture that some one opened the gate leading from the lane to the pasture, and thus allowed it to enter the lane, but the company must prove that the animal came through the gate.

Appeal from District Court, Kossuth County; A. D. Baille, Judge.

Action to recover the value of a mule killed upon defendant's right of way by one of its passing trains. The opinion states the facts. Trial to a jury, and verdict and judgment for plaintiff. Defendant appeals. Affirmed.

J. C. Cook, H. Loomis, and Clarke & Cohenour, for appellant. Thomas O'Connor and F. M. Curtiss, for appellee.

BISHOP, C. J. Defendant's line of road runs through the city of Algona nearly east and west. To the west from Thorington street, and connecting with a cattle guard on the west line of said street, the tracks are fenced on both sides. On the north side of the track there are two fences, the first extending west indefinitely, and the second extending for some 500 feet only, to what is referred to in the evidence as the "McCoy pasture." The first of such fences, which we will call the "south fence," connects with the cattle guard at Thorington street, and, as it runs east and west, is located about a rod south of the north line of defendant's right of way. The north fence is on the line of the right of way, and when it reaches the McCoy pasture it turns south, and is joined to the south fence. Thus a lane about a rod wide is formed, extending from the said street to said pasture. At the street end it is open, passage into it being wholly unobstructed. At the pasture end there is a gate, opening into the pasture field. Both fences were built by the defendant company, and whatever repairs have been made thereon were made by the employés of the company. The mule in question had been kept in said pasture, and was known to be therein the day before it was killed. During the evening before it was killed it was seen in the said lane. It is conceded that the south fence between the lane and the railway tracks had been out of repair for a long time, and there was evidence tending to prove that the mule in question strayed upon the tracks through such defective place in the fence, and that it came to its death by being struck by a passing train. It does not appear how, or at what time, the mule escaped from the McCoy pasture.

The liability of a railway company for stock killed by its trains is fixed by section 2055 of the Code. That section provides, in substance, that any railway corporation failing to fence its railway against live stock running at large where the right to fence exists shall be liable to the owner of any stock killed by reason of the want of such fence, etc.; and a failure to repair upon notice, or within a reasonable time, is a failure to fence, within the meaning of the statute. Aylesworth v. Railway, 30 Iowa, 459; Brentner v. Railway, 58 Iowa, 625, 12 N. W. 615; McCormick v. Railway, 41 Iowa, 193. Stating it in general terms, the contention of the appellant is that it cannot be held liable in this case, for that, as to stock running in the McCoy pasture, it was under no obligation to maintain the fence bounding this lane on the south; and, further, that as to the particular animal in question there is no direct evidence tending to prove that it came into the lane from the east or open end thereof, and was not, therefore, stock running at large, within the meaning of the statute. Such contention was embodied in a motion to direct a verdict, which was overruled, and in requests for instructions which were refused. We think there was no error in the rulings thus complained of. In the first place, were it not for the fact that the east end of the lane was open and unobstructed, we should be wholly disposed to agree that there was no obligation on the part of the defendant company to keep up or maintain the south fence. In view of such opening, however, the south fence became and was the railway fence, and the existence of the north fence became an immaterial consideration. We may qualify this by saying that, inas-

Digitized by Google

much as the north fence was on the right of way line, stock shown to have escaped through the same, or through the gate at the end of the lane from the McCoy pasture, directly upon the right of way, no negligence upon the part of the company appearing, it might be urged with much force that no liability for damages should attach to the company. Saying this is no more than to say that if a railway company, for the convenience of an adjoining landowner, puts in a gate between its right of way and a field of such owner, it cannot be held liable for injury to stock occasioned by the careless use of such gate by such owner or others not persons in its employ. Mears v. Railway, 103 Iowa, 203, 72 N. W. 509. But such doctrine cannot be made applicable to the case as it is made in the record before us. The lane in question was an open way, and stock straying thereon would be stock running at large, within the meaning of the statute. Now, the record does not answer the questions as to the time when and the place where the mule escaped from the pasture. It is certain enough that it was in there the day before it was killed, but it is also to be said that no one saw the gate open, and no one found any breaks in the fence of the McCoy pasture. But, with these facts before us, the questions still remain unanswered. The situation may be summed up by saying that we have simply the case of a mule running at large to-day that was within an apparently safe inclosure yesterday. This being true, and the mule having gone from an open way through a defective fence, and upon the tracks of the railway, where it was injured, a prima facie case of negligence on the part of the company can be said to have been made out. Such being the circumstances, the burden was then shifted to the defendant, to show its freedom from negligence. This conclusion has support in the following cases: Brentner v. Railway, supra; Small v. Railway, 50 Iowa, 338. And, in our opinion, it is not sufficient, to negative the case of negligence thus established, to point out that the mule was in a safe place the day before, or to indulge in the conjecture that some one opened the gate, and allowed it to enter the lane. In reason, the defendant may well be held to expect that stock would find its way into the lane, and ordinarily it could make no difference whether stock found there came from an adjoining inclosure or from one a mile away. If the company relies upon the fact that in getting upon its right of way such stock came through a gate in a fence separating its right of way from an adjoining field, it must prove such fact. The court cannot indulge in a mere supposition to relieve it from the effect of a prima facie case of negligence made out against it.

We discover no error, and the judgment is affirmed.

WILSON v. ONSTOTT.

(Supreme Court of Iowa. Oct. 14, 1903.)

BILLS AND NOTES—NATURE OF OBLIGATION—PRINCIPAL AND SURETY — ACTIONS — INSTRUCTIONS—SPECIAL INTERROGATORIES—HARMLESS ERROR.

1. Where, in an action on a note, the evidence showed a new consideration for a surety's agreement to pay the same as a principal, the court's failure to call the jury's attention to the requirement of a new consideration in an instruction that, though the deceased may have originally signed the note as surety only, if he subsequently agreed to become a principal, and pay the same, he would be liable, was not reversible error.

2. Where a court, of its own motion, submitted a special interrogatory, covering the material part of one asked, and the finding on such interrogatory answered the only question which could have been properly submitted, the court's refusal to submit the interrogatory asked was not error.

3. Where there was evidence warranting a finding that deceased, who was originally a surety on a note sued on, afterwards assumed its payment as principal for a valuable consideration, a general verdict based on such finding was not inconsistent with a special finding that he was originally a surety only.

Appeal from District Court, Cedar County; H. M. Remley, Judge.

Action in probate on a promissory note. Trial to a jury, and verdict and judgment establishing the claim. The defendant appeals. Affirmed.

C. J. Lynch and F. J. Casterline, for appellant. W. H. Smith and Jamison & Smyth, for appellee.

SHERWIN, J. There was evidence tending to show that the deceased was a principal on the note in suit, both by reason of his relation to the transaction in its inception, and by his subsequent agreement with his brother, one of the other signers thereof. But the jury found specially that he was only a surety when he signed, and, as it is conceded that his estate is not liable to the plaintiff unless he subsequently became liable as a principal, we need not further notice the surety feature of the case, nor the question whether he was an original principal.

Complaint is made of the eighth instruction, wherein the jury was told that, although the deceased may have originally signed the note as surety only, still if he subsequently entered into an agreement with the principal, whereby he agreed to take the machine and its earnings, and undertook to pay the note, he would be liable. So far as the instruction goes, it is undoubtedly correct, and the fault found with it is that it did not call the jury's attention specifically to a new consideration for such an agreement on the part of the deceased. The evidence showed such new consideration, and it would have been well to call the jury's attention to the matter of consideration; but a failure to do so when there is in fact evi-

Digitized by Google

dence thereof should not require a reversal of the case.

The fourth instruction is conceded to be correct so far as it relates to the question of suretyship, and the fact that it referred to instruction 8 was not error.

There was no error in refusing to submit the special interrogatory asked by the defendant. The court, on its own motion, submitted one covering the material part of the one asked, and the special finding on that answered the only question which could properly have been submitted.

The criticism of the other instructions is, we think, without merit; nor do we find any error in the rulings upon the introduction of the testimony. While the jury found specially that the deceased was originally only a surety on the note, there was evidence warranting its finding that he afterwards assumed its payment as a principal for a valuable consideration, and the general verdict was therefore in no way inconsistent with its special finding, and hence the court properly refused a judgment on such special finding.

Affirmed.

In re BRUNING'S ESTATE.

SALINGER & KORTE v. ARTS et al.

(Supreme Court of Iowa. Oct. 13, 1903.)

EXECUTORS — CONTRACTS FOR ESTATE — ATTORNEYS—FEES—ALLOWANCE BY COURT —JUDGMENT AGAINST HEIRS.

1. Where the shorthand notes of evidence were certified by the trial judge and by the reporter on the day of the submission of the cause, as shown by the certificate, such certificate and the date thereof cannot be impeached by affidavits filed in the Supreme Court on appeal.

2. Where the reporter's notes of the evidence bear a certain date as that of filing, it cannot be shown by affidavits on appeal that they were in fact filed on another date.

3. Where the reporter's notes of the evidence are filed with the clerk on the day on which the trial closed, the evidence is properly preserved, whether formally marked filed or not.

4. An application by attorneys to the probate court set up employment of plaintiffs by an executor under an agreement that a retainer fee should be fixed by the court, and that it had been fixed, and an order compelling payment was sought. Defendants resisted the application on the ground that there was no jurisdiction, and that the executor had no authority; and plaintiffs answered, praying that, if it be found that the order should be vacated, they have a personal judgment against the executor and heirs. *Held*, that a judgment against the heirs was erroneous, there being no facts alleged in the pleadings which could render them liable.

5. Where attorneys based their claim for services rendered an estate on a written contract with the executor, and the court refused to enforce such contract, it was error to enter judgment against the heirs.

6. A court sitting in probate has no jurisdiction to determine the individual liability of heirs for services rendered the estate by attorneys.

¶ 2. See Appeal and Error, vol. 2, Cent. Dig. § 2325.

Appeal from District Court, Carroll County; S. M. Elwood, Judge.

The defendant Arts is the executor of the estate of Clemens Bruning, deceased, and the other defendants are the heirs and legatees of said Bruning. November 15, 1899, Arts, as executor, entered into a written contract with the plaintiffs, whereby he employed them as attorneys for the settlement of the estate of Bruning, and agreed that a retainer's fee for such service should be fixed by the court. On the 9th day of February, 1900, without notice to the executor or heirs, the court fixed this fee at $500. April 10, 1901, the plaintiffs applied for an order of court compelling the executor to pay the said retainer's fee, and notice of said application was duly given. The defendants thereupon resisted the application, and asked that the order of allowance be set aside for want of jurisdiction, and for the further reason that the executor had no authority to make the contract, and, further, that the order of allowance was procured by fraud. The plaintiffs answered the allegations in resistance to their applications, admitting that the order fixing the retainer's fee was made without notice to the defendants, but stating that the defendants authorized Arts to make the contract, and that they and Arts were estopped from denying his authority to make the same. They alleged they had suffered damages in the sum of $2,000 by reason of a breach of the contract, and prayed for an allowance of that sum in addition to the retainer's fee against the estate, or against Arts individually if the estate was found not liable. In an amendment to their answer the plaintiffs pray that, if it shall be found that the order should be vacated, and that Arts was authorized by his codefendants to make the contract, the court determine the amount to which the plaintiffs are entitled, and order the same paid from the estate. In a later amendment the plaintiffs pray that, if the original order be vacated, they have a personal judgment against Arts and his codefendants for the sum of $1,300. There was a trial by the court, and a judgment denying the application of the plaintiffs for an order directing the executor to pay them the $500 retainer's fee, and setting aside the order making such allowance. The judgment also denied a recovery against Arts individually or as executor, but the plaintiffs were given a personal judgment of $1,300 against the other defendants, and they appeal. Reversed.

Lee & Robb, for appellants. Salinger & Korte, for appellees.

SHERWIN, J. The plaintiffs filed a motion to strike the evidence presented by the appellants' abstract because the same was not preserved by a proper bill of exceptions, the point being that the shorthand notes of the evidence were not duly certified and filed as required by statute in law cases. This mo-

tion was submitted with the case, and we shall first determine it. The case was finally submitted on the 4th day of October, 1901, though judgment was not entered until some time thereafter. The reporter's notes were certified by the trial judge and by the reporter on the day of the submission, as shown by the certificate. This certificate and the date thereof cannot be impeached by affidavit filed in this court. Barber v. Scott, 92 Iowa, 52, 60 N. W. 497. We must therefore find that the certificate was made on the 4th day of October, 1901, the day on which the case was finally submitted. The reporter's notes, as they now appear, bear a filing mark of date June 20, 1902, but it is claimed by the appellants that they were in fact left with the clerk for filing on the 5th day of October, 1901, and this claim they seek to establish by affidavits filed in this court. The same rule which applies to the date of the certificate is applicable to this point, and we cannot consider the affidavits as to the date of actual deposit with the clerk for filing. But in their third amendment to the abstract the appellees concede that the shorthand notes were filed at the close of the trial, but say that they were not then certified. As has already been said, they were certified on the 4th day of October, 1901, the day on which the trial was closed, and, it being conceded that they were immediately filed with the clerk, the evidence was properly preserved, whether formerly marked filed or not, and the motion to strike the same is overruled. Foster et al. v. Hinsen et al., 75 Iowa, 291, 39 N. W. 505.

The motion to strike the appellants' argument on the motion to strike the evidence because not filed in time was also submitted with the case, and is overruled.

On the merits of the case no argument seems necessary to demonstrate that the judgment against the heirs is radically wrong. A mere statement of the issues tendered by the plaintiffs seems to settle this point beyond all controversy. No facts are alleged which would make them liable. There is nowhere in the entire pleadings anything more than a mere prayer for judgment against them, and it is well settled that a prayer for relief cannot take the place of a statement of facts. Casady v. Woodbury County, 13 Iowa, 113; Kows v. Mowery, 57 Iowa, 20, 10 N. W. 283; Hines v. Horner, 86 Iowa, 594, 53 N. W. 317; 16 Enc. Pldg. & Prac. 779, and cases cited. It is claimed, however, that the case was tried on the theory that a case against the heirs was in fact presented by the pleadings. The record, however, does not sustain this contention, for it clearly shows that the appellants by timely objections and by motions to strike testimony bearing upon this issue sought to eliminate the question, and to confine the issue to the facts pleaded. Furthermore, there is no warrant in the evidence for a personal judgment against the defendants. The appellees based their claim upon a written contract made with the executor, whereby he undertook to compensate them from the funds of the estate. This the court refused to enforce, and when it did so, and vacated its former order, it was an end of the case as it then stood, and the heirs were not personally liable.

Nor do we think the court, sitting in probate, had jurisdiction to try and determine the individual liability of the heirs. Such an action would be entirely foreign to any matter properly arising relative to the estate, and the parties would be entitled to a trial to a jury, as in any other law action. See Prouty v. Matheson, 107 Iowa, 259, 77 N. W. 1039, and cases therein cited. This objection does not seem to have been urged below, however, and may be passed without further comment.

For the reasons pointed out, the judgment is reversed.

CHANNELL v. ALDINGER et al.

(Supreme Court of Iowa. Oct. 15, 1903.)

WILLS—CONSTRUCTION—DEVISE IN FEE.

1. Testator willed to his wife all his real and personal property, but provided that if she died without issue, and without disposing of the property by will, the same should descend to a designated person, if living, and, if not, then to his heirs. *Held*, that the wife took a fee, the directions as to the disposition of the property if the wife died without issue and without making a will being repugnant to the gift, and void.

Appeal from District Court, Keokuk County; W. G. Clements, Judge.

Action to construe a will. A demurrer to the petition was overruled, and a judgment was rendered on the pleadings for the plaintiff. The defendants appeal. Affirmed.

Brown & Brown, for appellants. B. W. Preston, for appellee.

SHERWIN, J. The clause of the will which is before us for construction is in the following words: "I give and bequeath to my wife, Louisa Stratton, all of my real estate and personal property of all and every kind that I may be possessed of at the time of my decease, and in case of my wife, Louisa Stratton, dying without issue and without devising of said property by will, then, in that case, the said property willed to her by me shall descend to Rachel Aldinger, if living; if not, then to her heirs, forever." The district court decreed that the plaintiff took thereunder an absolute title in fee to the real estate left by the testator, her husband. There is no serious difficulty in determining the intent of the testator from the language of the will itself. In the fore part of the clause an absolute bequest is made of his entire estate. Nothing is contained therein which in any way indicated a purpose to create a life estate only. In the latter part

Digitized by Google

of the clause the language which it is contended limits the estate to one for life in our judgment recognizes the bequest as in fee. It distinctly says that, if the devisee shall not have disposed of the property by will at the time of her death, then it shall descend to the persons named by the testator. We think it conclusive that the testator intended to and supposed that he was in fact making a will which would vest his entire estate absolutely in his wife, with full power of disposition for any purpose; and, if this is true, it follows that his attempt to direct to whom it should go in case it was not disposed of by his primary devisee is repugnant to his gift, and void. This rule is thoroughly settled by our own cases and by the great weight of authority elsewhere. Among our own cases so holding are Bills v. Bills, 80 Iowa, 269, 45 N. W. 748, 8 L. R. A. 696, 20 Am. St. Rep. 418; Law v. Douglass, 107 Iowa, 606, 78 N. W. 212; Hambel v. Hambel, 109 Iowa, 459, 80 N. W. 528; In re Barrett's Will, 111 Iowa, 570, 82 N. W. 998. In In re Estate of Proctor, 95 Iowa, 172, 63 N. W. 670, relied upon by the appellants, the devise to the wife expressly stated that it was for life, and the power of disposition was limited to sales necessary to furnish her support and pay debts —a decidedly different case from the one at bar. And in Podaril v. Clark (Iowa) 91 N. W. 1091, the devise was also for the devisee's natural lifetime, with an additional grant of a power of disposal in a separate clause of the will. The conclusion we reach on this branch of the case eliminates the question of a conditional fee, and we will not further notice it.

The demurrer was rightly overruled, and the judgment is affirmed.

UNITED STATES FIDELITY & GUARANTY CO. v. HITTLE.

(Supreme Court of Iowa. Oct. 16, 1903.)

BONDS—CONTRACT OF SURETY FOR INDEMNITY.

1. Plaintiff furnished defendant's official bond on the express condition that he would indemnify it against all loss, counsel fees, and expenses of every kind which it should for any cause sustain or incur by reason of its having executed the bond. *Held*, that plaintiff was entitled, in the absence of bad faith, to recover for fees of counsel employed by it in a suit brought against it and defendant on the bond, though he had employed competent counsel to represent them both, and had notified it thereof.

Appeal from District Court, Woodbury County; F. R. Gaynor, Judge.

The defendant was the treasurer of Sioux City, Iowa, and the plaintiff furnished his official bond in the sum of $100,000. In his application for the bond, the defendant agreed to "indemnify and keep indemnified" the company "from and against any, all loss, costs, charges, suits, damages, counsel fees, and expenses of whatever kind or nature which said company shall or may, for any cause, at any time, sustain or incur or be put to for or by reason or in consequence of said company having entered into or executed said bond." The defendant, as city treasurer, and the plaintiff, as his bondsman, were afterwards sued for a large amount. The defendant employed counsel to defend him, and notified the plaintiff of the fact, and also stated to it that his attorney would attend to the case for his bondsman. Notwithstanding this information, the plaintiff employed and paid counsel for looking after its interests in the litigation, and bring this action to recover the amount so paid. There was a trial to a jury, and a verdict and judgment for defendant. The plaintiff appeals. Reversed.

John R. Carter, for appellant. F. E. Gill, for appellee.

SHERWIN, J. The court instructed that the plaintiff could recover nothing unless it proved that the attorneys' fees paid by it were reasonably and necessarily expended in defending against the suits, and reasonably necessary to protect it from liability on its bond. The clearly-expressed thought of the charge is that no matter how conscientiously the plaintiff acted in employing and paying counsel to represent its interests in the litigation, it cannot recover, under the terms of its agreement with the defendant, unless the employment of such counsel was reasonably necessary; or, in other words, that if the defendant had employed competent counsel to represent himself and his bondsmen, the plaintiff could not recover. The plaintiff was asked to become the defendant's surety for a large sum, and it furnished the bond upon the express condition that the defendant would indemnify and keep it indemnified from and against any and "all loss, counsel fees, and expenses of whatever kind or nature which said company shall, for any cause, sustain, or incur, or be put to." This language is very broad, and was evidently intended to protect the company from any financial loss arising from its suretyship for the defendant. When it was made a co-defendant with him in suits seeking to recover large sums of money, it was but natural, and dictated by good business policy as well, that it should employ competent counsel to specifically look after its interests. This was the reasonable thing to do, under the broad language of the contract. No one will contend that expenses of any kind could be incurred for the sole purpose of mulcting the principal; but unless bad faith is shown, which would operate as a fraud upon the defendant, we think there can be no question of the plaintiff's right to employ and pay counsel under this contract, whether reasonably necessary, within the meaning of the instruction, or not. Hulett v. Soullard, 26 Vt. 295; Chilson v.

Digitized by Google

Downer, 27 Vt. 536; Trustees of Village of Newburgh v. Galatian, 4 Cow. 340. The contract is not to pay such expenses as may appear to have been reasonably necessary, but to pay such as have been paid or assumed for any cause; clearly leaving it discretionary with the plaintiff as to whether necessary or not, and only requiring it to act in good faith in the matter.

One or two other minor matters are argued, but, as our conclusion on the construction of the contract goes to the merits of the controversy, we do not discuss the others.

The instruction complained of is wrong, and the judgment is reversed.

GRAEBNER v. POST.

(Supreme Court of Wisconsin. Oct. 20, 1903.)

CORPORATIONS — ADOPTION OF BY-LAWS — STOCKS SUBSCRIPTIONS—CALLS—WAIVER OF IRREGULARITIES—CREDITS.

1. Though by-laws prepared and approved at a stockholders' meeting were not adopted by express vote of the directors, they will be considered as adopted by them, the conduct of the directors indicating that they regarded them as the by-laws of the corporation.

2. The participation of a stockholder, as stockholder, director, and president, in proceedings making and ratifying calls on stock subscriptions, is a waiver of irregularity in the calls and notice thereof, estopping him to object to their validity on account thereof.

3. A stockholder is entitled to credit on his unpaid subscription for money advanced by him as a fee to an attorney employed by him for services to be rendered the corporation, there being no funds available therefor, and his action being ratified by the directors.

Appeal from Superior Court, Milwaukee County; Orren T. Williams, Judge.

Action by W. H. Graebner, receiver, against W. M. Post. Judgment for plaintiff. Defendant appeals. Reversed.

Action by respondent, as receiver of the Blue Mounds Investment Company, to recover balance due upon a stock subscription. The corporation was organized for "the buying and selling of real estate and improving the same and the loaning of money upon securities." The articles of incorporation were recorded August 25, 1892. On the 22d day of August, 1892, at a stockholders' meeting, by-laws were presented and approved by them, but they were not thereafter formally adopted by the board of directors. These were the only by-laws the corporation had, and they were referred to and treated as the by-laws by the board of directors. Judgment had been rendered in a suit begun to foreclose a mortgage upon 18 acres of land owned by the corporation. Pending an appeal to the Supreme Court from this judgment, a call for the unpaid balance on the assessable stock was made January 18, 1899. Reference was made in the call to the possibility of judgment being given for a large sum against the corporation in the foreclosure suit. The resolution is as follows: "Whereas, litigation is pending against the Blue Mound Investment Company, which is to be determined on appeal to the Supreme Court, and as the same is uncertain as to how it will be decided and as a judgment is possible against this company for a large sum of money, aggregating between $8,000 and $9,000, and whereas, it is thought best to be prepared for the worst, and to prepare in ample time, so as to prevent any danger of additional and unnecessary expense, be it resolved, that a call be, and is hereby levied upon all unpaid subscriptions to the stock of the Blue Mound Investment Company for the entire amount remaining unpaid thereon, and that the same is hereby ordered to be paid into the company's treasury on or before the first day of August, 1899. Be it further resolved, that the secretary notify every member of this company of this call by sending notice thereof, personally or by mail, as soon as he reasonably can do so." Appellant participated in this meeting as president and stockholder, and also at subsequent meetings when this call was considered and ratified, without making any objection thereto. He gave his notes for the balance due on his subscription. The time for payment under the call was extended at various times. February 24, 1900, the liabilities of the corporation, which was in the form of this judgment, amounted to the sum of $8,910.65. The assets consisted of cash, $1,396.85; unpaid stock subscriptions, $2,364.25; and the 18 acres of land. The land was sold for $2,375, and a deficiency judgment entered for $6,105.55 on the 19th day of May, 1900. On the 21st day of May, 1900, upon the petition of the judgment debtor, the court, without giving notice of the application to the corporation, made an order declaring the corporation insolvent, and appointed a receiver. On the 19th day of May, 1900, the appellant, as president of the corporation, employed attorneys to protect the corporation in the litigation then threatened, and paid them $250 as a retainer. On the evening of the 21st day of May, 1900, at a meeting of the board of directors, this action of the president was ratified by resolution, and it was directed that he receive credit of $250 upon his unpaid stock, and that the secretary return to him his notes given for his unpaid assessment due on this call. On appeal to the Supreme Court, the order appointing a receiver was set aside. 86 N. W. 185. Subsequently a new petition was filed and the corporation was given notice thereof. At a meeting of the directors on the 29th day of August, 1901, the president was authorized to advance and pay to the attorneys an additional sum of $100. These attorneys represented the corporation on such appeal, and resisted this application for the appointment of a receiver. The board of directors thereafter applied this amount as a payment

¶ 2. See Corporations, vol. 12, Cent. Dig. §§ 236, 377.

Digitized by Google

judgment for the full amount they appeal. Affirmed.

Morton Barrows, for appellants. Theodore Bruener, for respondent.

BROWN, J. Action to recover a premium alleged to be due upon a policy of insurance claimed to have been sold by plaintiffs to defendant. Plaintiffs had a verdict for a portion of the amount sued for, and appeal from an order denying their motion for judgment for the full amount notwithstanding the verdict.

The facts are as follows: Some negotiations were had between the plaintiffs and defendant looking to the issuance of an employer's liability insurance policy to defendant, pursuant to which plaintiffs caused to be issued by the Ocean Accident & Guaranty Company, a corporation formed and created in England, but doing business in this country, and for which plaintiffs were general agents, a policy of insurance covering risks by accidents to defendant's employés, the agreed premium for which was $82.50. The policy was transmitted by plaintiffs by mail to defendant at its place of business in Sauk Center, this state, on May 21, 1900, and was duly received by it and retained until the 10th of July following, when it was returned by mail to plaintiffs at their place of business in Minneapolis, with the statement by defendant that it did not wish to take out such insurance. Plaintiffs immediately returned the policy to defendant, claiming that the long delay in returning it amounted to an acceptance, and that it could be canceled or surrendered only by agreement of the parties, and payment by defendant of a pro rata share of the premium, and stating, further, that, if defendant desired it so canceled, plaintiffs would comply with the request, and formally cancel it, upon receipt of the earned portion of the premium. The policy, with the accompanying letter, was received by defendant, and, without directions or instructions, the policy was again returned to plaintiffs, whereupon plaintiffs wrote defendant, acknowledging the receipt of the policy, and stating that it was held by them subject to the order of defendant, and notifying defendant, also, that action would be brought to recover the full premium. No further negotiations looking to the cancellation of the policy or a settlement of the dispute between the parties were had, and this action was subsequently brought to recover the full amount agreed to be paid for the policy, $82.50. The defense interposed at the trial was (1) that the policy had never been accepted by defendant, and never became operative as a contract between the parties; (2) that the policy was canceled by mutual consent of the parties on July 10th, at the time it was finally returned to plaintiffs by defendant. The trial court instructed the jury that if defendant retained the policy after its receipt an unreasonable time, without objecting to its form or contents, such act would amount to an acceptance, and bind defendant to pay the premium therefor; that, if the jury so found, they would return a verdict for plaintiffs, but that in no event could plaintiffs recover more than $10.25, the same being the earned portion of the premium to the date when the policy was returned to them, on July 10th. The latter part of this instruction was given on the basis that the evidence showed, as a matter of law, a cancellation of the policy on that date. The jury returned a verdict for plaintiffs for $10.25, thereby necessarily finding an acceptance of the policy by defendant when first delivered to it; that it was retained by defendant an unreasonable length of time, which amounted to an acceptance. Plaintiffs subsequently moved for a new trial on various grounds, and also for judgment for the full amount of the premium, notwithstanding the verdict. The trial court granted the new trial, but refused the motion for judgment notwithstanding the verdict, and the appeal is from the latter order.

The only question we deem it necessary to consider is whether the evidence is conclusive against the contention of defendant that the policy was canceled by the consent of the parties at the time of its return to plaintiffs on July 10th, though, in view of a new trial, we may say in passing that the question whether defendant retained the policy an unreasonable length of time was, under the evidence, properly submitted to the jury. If the policy was canceled, and that fact appears conclusively from the record, the trial court was entirely correct in instructing the jury as it did; but, if it does not so appear, the question was one of fact for the jury to determine. The record does not disclose the views of the trial court upon this question, but we assume that it came to the conclusion that the question was one for the jury, and for that reason denied the motion for judgment notwithstanding the verdict and granted a new trial. It is contended by counsel for appellants that the policy was not canceled, and that they are entitled to judgment for the full amount of the premium, the jury having found by their verdict an acceptance of the policy by defendant when it was first delivered. The only ground urged in support of this claim is that defendant could not effect a cancellation of the policy, for the reason that it had not complied with its terms giving the right of cancellation. This is based on that part of the policy which provides that it may be canceled by the insured by notice in writing to the company, "provided the premium shall have been paid." It is urged that, because the premium in question had never been paid, defendant was in no position to demand its cancellation. We do not concur in this view of the case. If it may be said that this provision of the policy is applicable as between these parties, it is clear that plaintiffs waived it, or at least whether

Digitized by Google

they did so waive it was a fair question for the jury. For by their letter of July 11th, returning the policy to defendant, after defendant first returned it to them, they expressly offered and agreed to cancel it as of that date, provided defendant paid them a pro rata share of the premium, and this with knowledge of the fact that no part of the premium had ever been paid. But this provision of the policy was inserted therein for the benefit of the insurance company, and we do not understand upon what theory plaintiffs can invoke it in their behalf. It is true, they are the general agents of the insurance company; but this action was brought in their own right, not as such agents, nor as representatives of the company, and whatever contract they may have made with defendant concerning the issuance of this policy was made in their own behalf, and not in behalf of the company. It is beyond question that they could rescind and cancel such contract, and the terms and provisions of the policy as respects the right of cancellation as between defendant and the insurance company could in no way affect their action in that respect. Whether a cancellation of the policy could be effected as to the insurance company before the full premium had been paid, by a waiver of such payment on the part of the agents without the consent of the general manager, as provided in the policy, we need not determine. The rights of the company in that respect are not here involved. The evidence made the question, as between plaintiffs and defendant, one of fact for the jury to determine; and the court below properly granted a new trial, instead of judgment in favor of plaintiffs notwithstanding the verdict.

Order affirmed.

MEYERS v. MARKHAM.

(Supreme Court of Minnesota. Oct. 23, 1903.)

VENDOR AND PURCHASER—BREACH OF CONTRACT—CLOUD ON TITLE.

1. Where the vendor in a contract for the sale of land subsequently conveys the land to a third party, the contract vendee has the election of two remedies: (1) To acquiesce in the conveyance, and seek a performance of the contract by a third party; or (2) treat the conveyance as a breach of the contract, and resort to an action against the vendor for damages.

2. In this case it is *held* that, by defendant's refusal to carry out the contract with the third party, he is conclusively presumed to have elected to pursue his remedy against his vendor; and plaintiff, vendee in the subsequent conveyance, is entitled to have the record of the contract removed, as a cloud upon his title.

(Syllabus by the Court.)

On rehearing. Reversed.

For former opinion, see 96 N. W. 835.

BROWN, J. We were impressed by the oral argument on the former presentation of this cause that there was very little for controversy between the parties to the litigation. We understand from what was said on the argument by counsel for plaintiff that the latter was willing to accept the purchase price of the land and carry out the terms of the contract, but defendant had refused to deal with him in the transaction; and on that theory the former opinion was written. On the reargument our attention is more clearly called to the real point in the case, namely, that, though plaintiff was, at the time the land was conveyed to him by Ogren, willing to carry out and perform the contract between Ogren and defendant, and to accept the purchase price there agreed by defendant to be paid, defendant has at all times persistently refused to recognize him in the transaction, or to perform or carry out the terms of the contract with him. To bring the matter to an end, plaintiff gave notice to defendant, some time after the conveyance by Ogren to him, of a cancellation of the contract for his (defendant's) failure to comply therewith, giving him 30 days' notice of such cancellation. Notwithstanding such notice, defendant refused to perform the contract or to recognize plaintiff as having any rights in the premises, and it is insisted that by his refusal defendant waived all right to pursue the land under the contract, or to have a specific performance thereof. We are urged to reconsider the case in this new light. Assuming, as we did, the willingness of plaintiff specifically to perform the contract, we did not give this feature of the case on the former hearing the consideration to which it was entitled.

The fact that the owner of land has entered into a contract for the sale of the same does not disable him from subsequently conveying and transferring the land to a third party, as was done in this case. The effect of such a transfer would be a breach of the contract, and would give the contract vendee the option of two remedies: (1) Acquiesce in the transfer, which in this case would have resulted in substituting Meyers for Ogren; or (2) treat the conveyance to the third person as a breach of the contract, and resort to an action for damages for such breach. In the case at bar the trial court found that, after Ogren had conveyed the land to Meyers, defendant refused to recognize the latter as having any interest in the land, or any right to insist on the performance of the contract, and he at all times refused to carry out the contract or perform any of its provisions. He must, from this, be deemed to have elected to repudiate the conveyance to Meyers, and to resort to his remedy against Ogren as for a breach of the contract. Meyers having given defendant notice of the cancellation, it was his duty to act promptly, and either treat with Meyers as the real party in interest, and perform the contract, or rely wholly upon his action against Ogren; and, not having proceeded under the contract, he can no longer pursue his remedy against the land. He must be taken to have abandoned all rights or claim

Digitized by Google

to a specific performance of the contract as against Meyers. It follows that plaintiff is entitled to have the record of the contract between Ogren and Markham canceled of record as a cloud on his title, and defendant limited to his action against Ogren for a breach of the contract. This is not a cancellation of the contract itself, but only removes it from the record as a cloud upon plaintiff's title, and whatever rights defendant may have as against Ogren for a breach of the contract are in no way affected. The notice of cancellation given by plaintiff to defendant was sufficient to require defendant to act, and in view of the fact that he has at all times refused to recognize plaintiff in the transaction, though having full notice of the conveyance to him, the written notice is sufficient to bring their relations to an end. Perhaps no written notice at all was necessary, under the circumstances.

It is therefore ordered that the judgment appealed from be reversed, with directions to the court below to order judgment for plaintiff, removing the contracts in question from record as clouds upon plaintiff's title, and excluding defendant from any right or interest in the land by reason of such contracts.

THOMPSON v. LAPSLEY et al.

(Supreme Court of Minnesota. Oct. 23, 1903.)

ADVERSE CLAIMS TO REALTY—EVIDENCE—NOTICE—BONA FIDE PURCHASER.

1. A finding of the trial court that plaintiff had knowledge of facts and circumstances sufficient to put him upon inquiry as to the nature of defendant's interest in the land in controversy in the action *held* not sustained by the evidence.

2. Notice of a specific title or interest in real property is operative as to a purchaser charged therewith in respect to the particular title or interest specified only, and is insufficient to put such purchaser upon inquiry as to some other inconsistent right.

(Syllabus by the Court.)

Appeal from District Court, Sherburne County; A. E. Giddings, Judge.

Action by Ernest Thompson against James W. Lapsley and others. Judgment for defendant Lapsley, and from an order denying a new trial plaintiff appeals. Reversed.

E. L. McMillan, Penney & McMillan, and James I. Best, for appellant. Frank T. White and Edson S. Gaylord, for respondent.

BROWN, J. Action to determine adverse claims to real property, in which, after a trial before the court without a jury, defendant had judgment, and plaintiff appeals from an order denying a new trial.

The facts are as follows: Both parties claim title to the land through one Knieaper—plaintiff, by deed executed in 1901, which was duly recorded; and defendant, through a mortgage executed by Knieaper prior to the execution of the deed, which was not recorded. It appears from the record that defendant Lapsley was formerly the owner of the land, which was largely incumbered by mortgage and otherwise, and he conveyed the same by properly executed warranty deed to Knieaper, which was not recorded. Knieaper left the deed with the register of deeds for record, but, for the reason that the taxes had not been paid, it could not be recorded. He entered into the possession of the land, and continued therein for some time, but, finding the incumbrances too heavy, and being unable to discharge the same, he abandoned the property, moving to Canada. As a part of the purchase price of the land, Knieaper executed to Lapsley a mortgage thereon for $1,700, which was not recorded, and is the mortgage under which defendant now claims in this action. Subsequent to the time Knieaper abandoned the land, Lapsley, learning of the fact, and knowing that his deed had not been recorded, undertook to make a sale thereof as the owner of the fee. He offered to sell it to plaintiff and his associates, but did not inform them that he held the mortgage he now relies upon. Plaintiff discovered the unrecorded deed to Knieaper in the office of the register of deeds, and subsequently purchased the land from him, paying therefor a consideration of $300. He then brought this action against Lapsley to determine the latter's claim to the land, in which Lapsley set up his unrecorded mortgage. The only question litigated at the trial was whether plaintiff had, prior to his purchase, actual or constructive notice of the unrecorded mortgage. The trial court found upon that question as follows: "While it is probable that actual notice of the mortgage above described, given by said Knieaper to Lapsley, was not given to said Rutherford and Webb, or this plaintiff, prior to their purchase of said premises, the said Rutherford and Webb had notice and knowledge prior to their purchase of the said premises of facts and circumstances amply sufficient to have put them on inquiry, which, if prosecuted with proper diligence, would have disclosed the nature of the interest of said defendant Lapsley in and to the premises, to wit, the mortgage above described, and that said plaintiff, Rutherford, and Webb neglected to make such inquiry." Rutherford and Webb negotiated the purchase of the property from Knieaper, and were jointly interested with plaintiff therein, so that whatever information they possessed concerning defendant's mortgage was notice as well to plaintiff.

The only question we deem necessary to consider is whether the finding of the trial court that plaintiff and his associates had notice of facts and circumstances sufficient to put them upon inquiry concerning defendant's mortgage is sustained by the evidence. Other questions are argued in the brief of appellant, but, as the result of our examina-

Digitized by Google

tion of the evidence is that the finding is not sustained, it is unnecessary to extend this opinion by their consideration. We have searched the record in vain for a single fact or circumstance reasonably tending to disclose to plaintiff or his associates the existence of this mortgage, other than the testimony of Knieaper that he applied to Rutherford to make a loan on the land for the purpose of paying the mortgage debt. He testified that he made such application, and expressly informed Rutherford of the fact that the mortgage was held by Lapsley. This testimony was denied by Rutherford, and the effect of the finding of the court that Rutherford, Webb, or plaintiff had no actual notice of the mortgage is equivalent to a finding that Knieaper's testimony in that respect was not true. It is clear that this testimony would have sustained a finding of actual notice, but, the court having found that he had no such notice, the testimony, as tending to disclose a circumstance sufficient to put plaintiff upon inquiry, must be eliminated from the case. The other alleged circumstances pointed out by counsel on the argument are wholly insufficient to justify the finding. It is unnecessary to refer to them in this opinion. Suffice it to say that no fact pointed out by counsel tends in any way to disclose the existence of the mortgage, or to show that defendant had any claim to the property, other than a title in fee. He endeavored to sell and convey the property to plaintiff, Rutherford, and Webb, as the owner, but made no mention whatever of the fact that he claimed any interest therein by virtue of the mortgage in question, and we find nothing upon which to base the charge that plaintiff or his associates failed to make due inquiry as to his rights or interests. Defendant having claimed a title in fee, plaintiff was justified in assuming that to be his only right, and was not required to inquire whether he might not have some other interest in the land. The notice of the specific claim was operative only as to the particular claim made, and not as to some right or interest inconsistent with such claim. 21 Am. & Eng. Ency. Law (2d Ed.) 587; Davison v. Waite, 2 Munf. (Va.) 527; Fire Ass'n v. Flournoy, 84 Tex. 632, 19 S. W. 793, 31 Am. St. Rep. 89; Bank v. Delano, 48 N. Y. 326; Rutherford Land & Improvement Co. v. Sanntrock (N. J. Ch.) 44 Atl. 938.

Order reversed and new trial granted.

VANT HUL v. GREAT NORTHERN RY. CO.

(Supreme Court of Minnesota. Oct. 23, 1903.)

INJURY TO EMPLOYÉ—DEFECTIVE TOOLS—KNOWLEDGE—EXPERT EVIDENCE—DAMAGES.

1. A flogging hammer, used in a machine shop for striking chisels and similar instruments, when manufactured and furnished by the master, is an implement, within the rule requiring the master to furnish tools and appliances reasonably safe for the purpose used.

2. It was not error to submit to the jury the question whether, under all the circumstances, the workman receiving the injury ought to have known that the hammer was defective, and ought to have appreciated the danger, and that, where inspection was made by the master, the foreman had a right to presume the instrument was reasonably safe for the purpose, and that the jury might take into account the workman's age and experience, in determining whether he ought to have known or discovered the defects.

3. The condition of the hammer, and the question of its suitability for the purpose, were not proper subjects for expert testimony.

4. The verdict was not excessive.

(Syllabus by the Court.)

Appeal from District Court, Ramsey County; George L. Bunn, Judge.

Action by Henry Vant Hul, by Sophie Vant Hul, his guardian ad litem, against the Great Northern Railway Company. Verdict for plaintiff. From an order denying a motion for judgment notwithstanding the verdict, and for a new trial, defendant appeals. Affirmed.

M. L. Countryman, for appellant. Sheehan & Keefe, for respondent.

LEWIS, J. Henry Vant Hul, a young man of 18 years, was in the employ of appellant company as an apprentice in its boiler shops. Having been directed by the foreman in charge of the shops to go to work rounding up flumes in the boiler of a certain engine, he did so, using a flogging hammer and steel pin; and while so engaged a small piece of steel broke off the face of the hammer when he struck the pin, and flew into respondent's left eye, destroying its sight, and seriously injuring the power of vision of the right eye. This action was commenced to recover damages, based upon the ground that appellant had been negligent in failing to properly inspect the hammer, and in furnishing respondent with a defective tool. The trial court submitted the issues to the jury, by stating that it was admitted respondent was directed by the foreman to do the work, and that he was injured by a piece of steel flying from the hammer furnished him, and instructed the jury that it was the duty of the master to furnish tools reasonably safe for the purposes used; submitting to it the question whether in this instance the master had complied with this requirement. This part of the charge embodied the direction that the jury should take into consideration the condition of the hammer, and, from all the evidence, determine whether it was in a dangerous condition—whether its defects, if any, were of such character that a piece of steel might fly from it when used with ordinary care, or whether it was reasonably safe for use. The court further charged the jury that if, from the evidence, they found that the inspector of tools gave respondent the hammer, then they should, from a consideration of all the circumstances, determine

Digitized by Google

respondent ought to have known that the hammer was defective, and ought to have appreciated the danger. The jury were also instructed that, if they found the tool inspector furnished respondent the hammer, they should take into account that circumstance, in deciding whether respondent was excused from not discovering or knowing its defects; that where the master employs an agent or inspector to care for and inspect its tools, and an employé is given a tool by such inspector, the employé has a right to presume it to be in proper condition—reasonably safe for use. The court further charged the jury that respondent was not entitled to any consideration by reason of his minority; that he was old enough to be considered a man of ordinary intelligence and capacity; but that they might take into consideration his experience at such work—his experience in boiler shops, with flogging hammers, or other hammers used around machinery—in determining whether he ought to have known or discovered the defects in the hammer at the time he was using it. The assignments of error challenge the correctness of these instructions. Appellant offered expert testimony to the effect that the hammer used by respondent at the time of his injury was not dangerous or improper for such purpose, and that it was safe and a proper tool. Error is assigned upon refusal of the court to permit the following question: "I will ask you whether or not hammers in the condition that the hammer which the plaintiff used on that day—hammers with checks—were in general use around the boiler repair shops at the time plaintiff was hurt during the time he was employed?" A verdict of $14,400 was returned for respondent, and appellant appealed from a motion for judgment notwithstanding the verdict and for a new trial.

(1) Was the flogging hammer a tool of that class of instruments within the general rule which requires the master to furnish the employé tools and instruments which are reasonably safe for the uses to which they are to be put, and does it conclusively appear from the evidence that respondent assumed the risk of using the hammer in its defective condition? (2) Should expert testimony have been received to the effect that the hammer was a safe and proper tool? (3) Was it error to exclude evidence offered to show that other hammers than the one used by respondent were in a similar condition and in general use around the boiler shops? (4) Was the verdict excessive?

1. In the case of Hefferen v. Northern Pacific Railway Co., 45 Minn. 471, 48 N. W. 1, 526, the plaintiff was injured by a sliver of steel which flew from a tool called a "side-set." It was there held that defendant was not liable for the condition of the tool, upon the ground that it did not inspect, and provide a tool repairer, whose duty it was to furnish tools to the men, but, on the contrary, it was the custom for the men to take the tools to the repairer when necessary, and to select others from those furnished at different places in the shop. It was there stated that it was not the duty of the master, under ordinary circumstances, to see to it that tools which became obviously unfit for use were removed beyond their reach, and that other tools were furnished to take the place of those getting out of repair, and it was plaintiff's duty to lay aside the defective side-set when it became dangerous and select a proper one. In Morris v. Eastern Ry. Co. (Minn.) 92 N. W. 535, the complaint was sustained on demurrer, and the charge of negligence was that defendant manufactured and delivered to plaintiff a flogging hammer which was defective, in that the face of it contained several flaws or holes; that, in using the hammer upon a side-set, a sliver of steel was detached from one of the holes or flaws, causing the injury, and it was alleged that these defects were not apparent, and their danger was not appreciated by the plaintiff by the exercise of ordinary care. In the decision the case was distinguished from Hefferen v. Railway, supra, as follows: In the former, the condition of the instrument was apparent, and did not arise from a defect in its manufacture, whereas in the Morris Case the defect arose in the manufacture of the tool: and the distinction was also pointed out that in the one case it was the duty of the workman to select the tool with which to do the work, while in the latter the allegation of the complaint was that the hammer manufactured was furnished to plaintiff for the purpose of doing the work specified. In the case before us, the hammer in question was manufactured by appellant. Such hammers were made from bars of steel, and it required experience and great skill to properly temper them, and very few will stand continual use without, in the course of time, showing cracks or checks upon their surface and edges, which appear sooner or later, according to the temper of the steel and the manner and length of time of use, and that, as a result of such checks and cracks, there comes a time in the life of such hammers when they are liable to break, and must be set aside as useless. The evidence was conflicting upon the question whether or not appellant inspected the tools, and furnished the hammer in question to respondent. The jury found contrary to the claim of appellant, and found that such inspection was made, and that the hammer was delivered to respondent. This fact alone distinguishes the case from Hefferen v. Railway, supra. According to the decision of the jury, the company not only manufactured the hammers, but kept them in a room fenced off for that purpose, and provided a tool inspector, whose duty it was, upon application from the workmen, to hand out tools for the given purpose. When we consider the skill required in the manufacture of such hammers, and the fact

Digitized by Google

that there arrives a point in the course of their use when their vitality is destroyed and they are liable to check and break, a condition is presented which takes them out of the class known as common tools, whose condition is as easily discernible by a workman as an inspector. It is desirable that an inspector be furnished, whose duty it is to pass upon the safety of such instruments; and, according to the evidence, the company recognized the desirability of inspection, and provided for it. It is evident from the nature of the checks and cracks, as appears from the evidence, that a hammer might be in an unsafe condition, and yet the danger of using it not be apparent to an inexperienced and unskilled workman. It is true that a workman of long experience, accustomed to use such hammers, and who had become familiar with the fact that they would crack in the course of time, might be as competent to judge of their safety as would an inspector furnished by the company for that purpose; but if the company established the system of collecting its tools and hammers under the charge of a custodian, whose duty it was to inspect and furnish them to the workmen as required, such practice would tend to cause the workmen to become less vigilant in their inspection of the tools than if the practice was to permit them to use their own judgment in selection. In this case respondent was an apprentice, 18 years of age, with very limited experience; and it was for the jury to say whether he assumed the risk of using the hammer in the condition in which it was, and it was proper for the court to instruct the jury that in determining that question they might take into account his experience as a workman. Although the checks and cracks upon the face of the hammer were observable, he was not necessarily in a position fully to appreciate the danger arising from its use. His experience being of a limited character, it was a question for the jury to say how much he was entitled to rely upon the inspection provided by the company, and whether he assumed the risk of using it.

2. The expert testimony was properly excluded. It was for the jury to find, under all the circumstances, whether the tool was a proper one, and, if not, whether the respondent assumed the risk of using it.

3. It was not error to exclude the testimony with reference to the condition of other hammers around the shop. There may have been other hammers which at different times had similar marks or defects, but that fact could have no bearing upon the case, unless for the purpose of showing that respondent was familiar with such defects, and that he knew the condition of the hammer in question when he received it, and assumed the risk of using it, but the evidence excluded did not go to that extent.

4. The young man lost the entire vision of one eye, and, according to the testimony, the other eye was impaired to the extent of about nine-tenths, with a strong probability that the sight would ultimately be entirely lost. Under these conditions, it cannot be said that the verdict is excessive.

Order affirmed.

ERICKSON v. SORBY.

(Supreme Court of Minnesota. Oct. 23, 1903.)

MASTER AND SERVANT—ABANDONMENT OF EMPLOYMENT—EXCUSE.

1. An assault and battery wrongfully and unlawfully committed by a master upon his servant may justify the servant in abandoning the master's service, even though he be under contract for a definite period of time. The nature of the assault, and whether a sufficient justification, is a question of fact to be determined by the trial court.

2. Evidence considered, and *held* sufficient to sustain the judgment appealed from.

(Syllabus by the Court.)

Appeal from District Court, Chippewa County; G. E. Qvale, Judge.

Action by Peder Erickson against M. H. Sorby. Judgment for plaintiff before a justice of the peace was affirmed, and defendant appeals. Affirmed.

Oluf Gjerset, for appellant. C. D. Bensel, for respondent.

BROWN, J. Action to recover for work and labor, brought in justice court, where plaintiff had judgment, from which defendant appealed to the district court on questions of law alone. The judgment of the justice was there affirmed, and defendant appealed to this court.

The only question presented for consideration is whether the evidence, which was returned by the justice on the appeal, is sufficient to sustain plaintiff's recovery. The defense to the action was that plaintiff had entered into a contract to perform labor and services for defendant for a definite period, and that without cause or justification he abandoned the contract before its completion. The contract was admitted by plaintiff, and he justified his failure to perform on the ground that defendant wrongfully and unlawfully committed an assault and battery upon his person, by reason of which he quit his service. The evidence presented in the record tends fairly to sustain plaintiff, and to show that defendant did, when plaintiff was engaged under the contract, commit an assault and battery upon him. This, if true, might justify plaintiff in abandoning his contract. The character of the assault, and whether a sufficient justification, was a question of fact, and we discover no reason for disagreeing with the conclusion reached by the court below. As a general rule, a wrongful and unlawful assault and battery committed by the master upon his servant will jus-

¶ 1. See Master and Servant, vol. 34, Cent. Dig. §§ 29, 122.

Digitized by Google

tify the latter in abandoning his employment, though engaged for a definite and fixed time, and without working a forfeiture of compensation for the time actually engaged under the contract. Matthews v. Terry, 10 Conn. 457; Bishop v. Ranney, 59 Vt. 316, 7 Atl. 820.

The point made that the evidence tending to justify plaintiff in abandoning the contract was inadmissible under the pleadings, cannot, in view of the liberal rules applicable to proceedings in justice court, be sustained.

Judgment affirmed.

KENNEDY v. KELLUM.

(Supreme Court of Minnesota. Oct. 23, 1903.)

JUSTICE OF THE PEACE—CONTINUANCE—PLEADING.

1. In this action, which originated in justice court, it is *held* that the pleadings were closed on the day to which the cause had been adjourned, and that the defendant was then entitled to an adjournment of the case for not exceeding one week, as a matter of right.

(Syllabus by the Court.)

Appeal from District Court, Clay County; L. L. Baxter, Judge.

Action by J. W. Kennedy against D. D. Kellum. Judgment for plaintiff before a justice was affirmed in the district court, and defendant appeals. Reversed.

Chas. S. Marden, for appellant. E. E. Corliss, for respondent.

START, C. J. This action originated in justice court. The summons was returnable December 13, 1902, at 10 o'clock a. m., at which time the parties appeared. The plaintiff filed his complaint, and the defendant asked for a continuance for one week, and to file his answer by December 18th, and serve a copy thereof on the plaintiff within five days. Thereupon the justice adjourned the cause to December 20th, at 10 o'clock a. m. The defendant, December 15th, filed his answer, which alleged a counterclaim, and served a copy thereof on the plaintiff. At the time to which the action was adjourned, the parties appeared. The justice then adjourned the case until 1:30 o'clock p. m. of the same day, at the request of the defendant, when the parties again appeared. The plaintiff filed a reply to the answer, putting in issue the alleged counterclaim. The defendant then amended his answer by omitting his counterclaim. The defendant moved an adjournment of the cause for one week, stating that it was necessary to take the depositions of certain witnesses. The motion was denied. The defendant excepted, and left the courtroom. The justice then heard the plaintiff's evidence, and rendered judgment in his favor and against the defendant, who appealed therefrom to the district court on questions of law alone. The district court affirmed the judgment of the justice, and the defendant appealed to this court. The sole question presented by these facts for our decision is whether the defendant was entitled, as a matter of right, to a continuance of the cause for one week, at the time he requested it. If he was, then the justice erred in denying the request and awarding judgment against the defendant. If the pleadings were closed on the day to which the cause was adjourned, and not before, the defendant was entitled, as a matter of right, to a continuance not exceeding one week. Gen. St. 1894, § 4990; Franek v. Vaughn, 81 Minn. 236, 83 N. W. 982; Johnson v. Little, 82 Minn. 69, 84 N. W. 648.

The question, then, stated concisely, is, were the pleadings closed on the adjourned day, and not before? We answer the question in the affirmative. This answer is strictly in accordance with the understanding and action of the parties and of the justice on the adjourned day until the defendant asked for a continuance for one week, for the plaintiff on that day filed his reply, and the defendant an amended answer, without objections. The plaintiff, however, here claims that the pleadings were closed on the return day of the summons. The claim is contrary to the record, for only the complaint was then filed, leaving the matter of further pleadings open, the defendant having the right to thereafter file his answer. It is true that it was not expressly provided by the order of the justice that the plaintiff might reply to the answer in case it contained a counterclaim, but this was necessarily implied. Otherwise the defendant might, as he did, allege a counterclaim which would stand as admitted by the plaintiff if he had no right to reply. This right to reply was exercised by the plaintiff on the adjourned day, without objection from any one. How, then, can he now consistently claim that the pleadings were closed on the return day of the summons? The plaintiff also claims that the adjournment on December 20th from 10 o'clock a. m. to 1:30 p. m. exhausted the defendant's right to an adjournment for one week. Whether this was an adjournment of the cause, within the ordinary meaning of the term, or simply a holding of the case open until a later hour of the same day, we need not inquire, for the fact remains that the pleadings were not closed until 1:30 o'clock p. m., when the right of the defendant to demand an adjournment of the case for not exceeding one week accrued.

Judgment of the district court must be reversed, and the case remanded, with directions to enter judgment reversing the judgment of the justice. So ordered.

Digitized by Google

BROWN et al. v. ROBERTS et al.

(Supreme Court of Minnesota. Oct. 23, 1903.)

ACTION ON CHECK—FAILURE OF CONSIDERATION—FINDINGS.

1. A partial want or a partial failure of consideration can be shown, if properly pleaded, as a defense pro tanto to a negotiable instrument in the hands of the original payee, or of a party standing in his shoes.

2. A finding that "the allegations of the answer are not proven" is the equivalent of a general finding that the facts are not as alleged in the answer, and is sufficient, except as against a motion to make it more specific.

3. In this, an action upon a check, it is *held* that the answer alleges facts constituting the defense of a partial want of consideration; that the trial court heard and determined such defense, and found that the facts were not as alleged; and that the finding is sustained by sufficient competent and relevant evidence.

(Syllabus by the Court.)

Appeal from Municipal Court of St. Paul; R. C. Hine, Judge.

Action by Hiram D. Brown and Herbert H. Bigelow against E. P. Roberts and others, doing business as the Minnesota Association of Local Insurance Agents. From a judgment for plaintiffs, defendants appeal. Affirmed.

Edward B. Graves, for appellants. H. A. Hageman, for respondents.

START, C. J. Appeal by defendants from a judgment of the municipal court of the city of St. Paul. The complaint alleges that the defendants, for value received, made and delivered their check to the plaintiffs, wherein and whereby they directed the Minnesota Loan & Trust Company to pay to their order $86; that the plaintiffs duly indorsed the check, and it was duly presented to the drawee for payment, which was refused for the reason that the defendants had stopped payment thereof, and thereupon the check was protested for nonpayment, and notice duly given; and, further, that no part of the check has ever been paid. The answer admits the making of the check, the stopping of payment thereof by the defendants, and that it was duly presented for payment and has never been paid. The answer then alleges, in substance, that the defendants ordered from the plaintiffs 300 membership certificates, for the agreed price of $51, for which sum, and no more, they were indebted to the plaintiffs; that the check for $86 made and delivered to them included a present to them of $35, for which there was no consideration whatever, and that the plaintiffs were so notified when the check was delivered to them; and, further, that before the check was presented for payment the defendants decided not to make them a present of $35, and stopped payment of the check. The reply alleged, in effect, that the price of the certificates was 17 cents each, $51, plus the reasonable cost of engraving the plate, which was $35, and that the check was given for the amount of the plaintiffs' bill, $86. The cause was tried by the court, and findings of fact and conclusions of law made, wherein the court found as facts that the check was made and delivered as alleged in the complaint; that it was duly presented for payment, which was refused, and that no part thereof has ever been paid; and, further, "that the allegations of the answer are not proven"; and, as a conclusion of law, that plaintiffs were entitled to judgment against the defendants for $86. The defendants then moved the court to amend its findings of fact by substituting for them findings of certain evidentiary facts, and to find, as a conclusion of law, that defendants were entitled to judgment. The motion was denied. The defendants here claim that their answer alleged a partial want of consideration for the check, to the extent of $35; that this was a good defense; and that the trial court ignored this defense, and refused to make any findings thereon, although evidence was offered in support of the defense on the trial. If this claim is supported by the record, the action of the trial court was reversible error. Whatever doubt there may have been at one time as to the question, it must now be held, in view of later decisions of this court, that a partial want or a partial failure of consideration can be shown, if properly pleaded, as a defense pro tanto to a negotiable instrument in the hands of the original payee, or of a party standing in his shoes. Stevens v. Johnson, 28 Minn. 172, 9 N. W. 677; Torinus v. Buckham, 29 Minn. 128, 12 N. W. 348. While a distinction has sometimes been made between a partial failure of consideration and a partial want of consideration, it has been quite uniformly held that the latter is always a defense pro tanto as between the original parties to the instrument. 4 Enc. of Law, § 195; 1 Daniel, Neg. Instruments, § 201. The answer of the defendants, then, stated a defense pro tanto, and they were entitled to have their defense heard and passed upon by the court, and the only question of any practical importance raised by the assignments of error is whether the court did so hear and pass upon the defense. The court certainly held that the answer stated a defense pro tanto, for it denied plaintiffs' motion for judgment on the pleadings, and received the evidence of the defendants in support of their defense. The burden was upon the defendants to establish their defense, as the answer admitted a prima facie case; that is, the making, delivery, and nonpayment of the check. Whether or not the defendants sustained their defense depends upon the question whether they were, at the time the check was delivered, owing the plaintiffs $86, or only $51. The evidence shows that the plaintiffs demanded from defendants payment of their

¶ 1. See Bills and Notes, vol. 7, Cent. Dig. §§ 1373, 1374, 1374½.

Digitized by Google

bill, $86; that the defendants then sent the check to them for the full amount of the bill, but stated in the letter of transmittal that $51 was in payment of the bill, and the balance, $35, was sent as a present, as they did not care to be involved in any possible litigation or controversy. Now, if in fact the defendants owed the full amount of $86, their simple statement that the $35 was a present would not make it so. There would be no partial want of consideration, for in that case the check would be for the exact amount the defendants were bound to pay. The evidence was conflicting as to the true amount of the bill, but it is ample to sustain a finding against the defendants on the question. This leaves only the question whether the trial judge passed upon the evidence, and found upon the issues tendered by the answer. The record shows that he did so, for he expressly found that "the allegations of the answer are not proven." This form of an omnibus finding as to specific issues is not to be commended. Nevertheless it is the equivalent of a general finding that the facts are not as alleged in the answer, and is sufficient, except as against a motion to make it more specific. Hewitt v. Blumenkranz, 33 Minn. 417, 23 N. W. 858; Reynolds v. Reynolds, 44 Minn. 132, 46 N. W. 236.

No motion was made to have the court find specifically the amount of the defendants' indebtedness at the time the check was delivered, and we hold that the trial court did hear and find upon the issues tendered by the answer. It must be admitted that there are certain statements in the memorandum of the trial judge, which, if considered without reference to other portions thereof, tend to substantiate the claim of the defendants, but the memorandum is no part of the findings.

Several errors are assigned and urged as to the rulings of the court in admitting evidence. We have examined them, and hold that the findings of fact are sustained by sufficient competent and relevant evidence, and that the record shows no reversible errors.

Judgment affirmed.

CRANE & ORDWAY v. SAUNTRY.

(Supreme Court of Minnesota. Oct. 23, 1903.)

JUDGMENT BY DEFAULT—VACATING—DISMISSAL.

1. As a general rule, in applications to vacate a judgment by default an affidavit of merits is essential. But where it fairly appears from the records and papers upon which the motion is based that the moving party has a good cause of action or defense on the merits, the necessity for such an affidavit is a question for the trial court.

2. The trial court did not abuse its discretion in setting aside a judgment of dismissal taken on plaintiff's default.

(Syllabus by the Court.)

¶ 1. See Judgment, vol. 30, Cent. Dig. § 311.

Appeal from Municipal Court of Stillwater. A. E. Doe, Judge.

Action by Crane & Ordway against William Sauntry. From an order granting plaintiffs' petition to set aside a dismissal of an action, defendant appeals. Affirmed.

Manwaring & Sullivan, for appellant. H. H. Gillen, for respondents.

START, C. J. This is an appeal by the defendant from an order of the municipal court of Stillwater granting plaintiff's motion to set aside a judgment of dismissal of the action taken by default and to reinstate the action for trial. The order was based upon the records and files in the action and the affidavit of the plaintiff's attorney, which was uncontradicted. There was no formal affidavit of merits. The motion was one addressed to the discretion of the trial court, and its decision thereon will not be reversed, unless it appears from the record that there was a clear abuse of such discretion. This proposition the defendant concedes, but he here claims that the court did abuse its discretion in making the order, because there was no affidavit of merits; and, further, that the affidavit of the plaintiff's attorney conclusively shows that he was guilty of inexcusable neglect in the premises, which resulted in his client's default. The general rule is that in applications to vacate a judgment on default an affidavit of merits is essential. People's Ice Co. v. Schlenker, 50 Minn. 1, 52 N. W. 219. The rule, however, is one of practice, and the sufficiency of an affidavit of merits, or the necessity for one, where it fairly appears from the records and papers upon which the motion is based that the moving party has a good cause of action or defense on the merits, is a question for the trial court. Sheldon v. Risedorph, 23 Minn. 518; Nye v. Swan, 42 Minn. 243, 44 N. W. 9; Gillette-Herzog Mfg. Co. v. Ashton, 55 Minn. 75, 56 N. W. 576; Rhodes v. Walsh, 58 Minn. 196, 59 N. W. 1000; Forin v. City of Duluth, 66 Minn. 54, 68 N. W. 515; McMurran v. Bourne, 81 Minn. 515, 84 N. W. 338. The complaint alleges the sale and delivery of certain goods by plaintiff to the defendant. The answer admits the sale and delivery, but alleges that the goods were defective, and claims damages by way of counterclaim. The defendant, however, upon plaintiff's default, made no proof of his counterclaim, but took a simple judgment of dismissal. These facts justify the conclusion that the trial court did not err in dispensing with a formal affidavit of merits.

The facts relied upon to excuse the plaintiff's default do not appeal to us very strongly, and the trial court might well have denied the motion upon the merits. If there were any negligence in the premises, it was solely that of the plaintiff's attorney, and the facts relied upon to excuse the default are substantially these: In February, 1902, the plain-

Digitized by Google

tiff's attorney was elected a delegate to a convention of Foresters to be held in California April 29th. He commenced this action March 24th. April 3d the defendant's attorney served an answer in the case. Counsel on both sides then knew that plaintiff's attorney intended to be present at the convention, and defendant's counsel, in response to the question of plaintiff's counsel as to when he wanted to try the case, replied, "I think we are ready whenever you are." The plaintiff's counsel then said that he would serve a reply and notice of trial as soon as he got around to it, and the other counsel answered, "All right, we will be there." Counsel for plaintiff, assuming and believing that no notice of trial would be served by defendant's counsel during his absence, went to California on April 21st, and returned May 12th. Meantime defendant's counsel served notice of trial of the case by leaving it at the residence of plaintiff's counsel, and took judgment of dismissal by default. Neither the plaintiff nor its counsel had any actual notice of the trial or judgment until after May 12th. The defendant's counsel, in response to an inquiry why he had taken the default in the absence of plaintiff's counsel, responded, "Because you dismissed our motion in the Starkey case." The trial court required the plaintiff to pay all of defendant's disbursements in the action as a condition of opening the default. It is not here claimed that the defendant was in fact injured by the order. It must also be conceded that the plaintiff might have commenced his action again without any special burden of cost. Upon these facts it would seem that the plaintiff's counsel was lacking somewhat in caution, and that in the exercise of reasonable prudence he ought to have secured a definite agreement as to the noticing of the case for trial before leaving the state. But upon the whole record we are not prepared to hold that the trial court abused its discretion in making the order.

The order must be affirmed, but no statutory costs will be allowed. So ordered.

In re HARNEY.

(Supreme Court of Michigan. Oct. 22, 1903.)

PRISONS—REDUCTION OF TERM FOR GOOD BEHAVIOR—PRIOR SERVICE OF TERMS.

1. One has not served a term in prison, within Comp. Laws 1897, § 2112, allowing a prisoner reduction of term for good behavior if he has not already served a second term, though he was sentenced to and confined therein, the convictions having been of offenses not punishable by such confinement.

Application of John Harney for a writ of habeas corpus. Petitioner discharged.

Parkinson & Campbell, for petitioner. Charles A. Blair, Atty. Gen., for respondent, the warden of the State Prison.

CARPENTER, J. Petitioner is an inmate of the State Prison at Jackson. He was sent to that institution December 14, 1894, for a term of 10 years. He admits that prior to this time he had served a term of imprisonment in that institution, of 1 year. If petitioner is now serving his second term in said prison, his allowance of time for good conduct, under section 2112, Comp. Laws 1897, entitles him to his freedom. It is claimed, however, that petitioner had served his second term before his present term of imprisonment commenced. If this is true, his detention is legal, for section 2112, Comp. Laws 1897, provides, "If any convict has already served a second term in said prison, he shall be allowed no good time, but shall be held until the full completion of his sentence."

The facts upon which said claim is based are these: Before petitioner was convicted of the offense for which he is now being punished, he served four terms of imprisonment in the State House of Correction and Reformatory at Ionia. That a term of imprisonment in that institution is "a term in said prison," under the proper construction of section 2112, was determined by this court in the Case of Armstrong, decided in 1898, and in Re Coy (no written opinion). Each of these terms of imprisonment in the Ionia institution was 90 days in length. He was sentenced to one of these terms of imprisonment by a circuit judge. He was sentenced to each of the other three by a justice of the peace. The offense of which he was convicted in each case was that of assault and battery. Neither the justice of the peace (see In re Silverthorn, 73 Mich. 644, 41 N. W. 834), nor the circuit judge (see Brown v. People, 39 Mich. 57), had jurisdiction to impose this punishment. In determining what terms of imprisonment petitioner is now serving, shall we count any of these terms spent in the Ionia institution? The imprisonment in that institution was justified by no law. It was sufficiently illegal to be open to collateral attack by a writ of habeas corpus. See In re Silverthorn, supra. One is not "serving a term," within the meaning of the act, when he is detained in prison without warrant of law. We think it obvious that the Legislature intended to deprive the convict serving his third term of the benefit of all allowance for good time because he had twice been found guilty of a crime punishable by imprisonment in a state prison, and received such punishment therefor. Until he has been twice convicted of such an offense, a convict cannot serve his second term, within the meaning of the act. Under the contrary construction, the convict loses the good time, not through any fault of his, but through the mistake of the judge who sentenced him. When he served a sentence which was in at least one sense unlawful, he paid a sufficient penalty for this mistake. His misfortune should not be doubled, as it would be if he were deprived of his good-time allowance.

The petitioner should be discharged. The other Justices concurred.

Digitized by Google

HINE v. GRANT et al.

(Supreme Court of Wisconsin. Oct. 20, 1903.)

DISMISSAL AND NONSUIT—FAILURE TO PROSECUTE—JUDGMENTS—VACATION—ABUSE OF DISCRETION.

1. Rev. St. 1898, § 2611a, authorizes the dismissal of actions not brought to trial within five years, and section 2832 authorizes the court, in its discretion, to relieve a party from a dismissal, provided the judgment was taken through his mistake, inadvertence, surprise, or excusable neglect. An action was dismissed for failure to prosecute by an ex parte order, and shortly thereafter plaintiff applied for a vacation of such order. Issue was joined on October 2, 1897, and it was first noticed for trial on August 4, 1898. Shortly thereafter negotiations for settlement were entered into, which were continued until the close of 1901. Thereafter defendant's attorney requested a continuance from the March, 1892, term of the court, and a stipulation was filed that the case should be placed on the calendar at the September, 1902, term. A few weeks before such term such attorney again asked for a continuance, to which plaintiff's attorneys consented, and notice of trial was served for the succeeding March term, which was the first term following the September, 1902, term. The March, 1902, term was within the five-year limit, but the September, 1902, and the March, 1903, terms were beyond the limit. *Held*, that an order refusing to set aside the dismissal was an abuse of the trial court's discretion.

2. Where, in an action on a note, the complaint was duly verified, and stated a cause of action, no further showing of merits was necessary on an application to set aside an order dismissing the complaint for failure to prosecute.

Appeal from Circuit Court, Kenosha County; E. B. Belden, Judge.

Action by Thomas W. Hine against Emory L. Grant, impleaded with another. From an order denying a motion to set aside a judgment dismissing plaintiff's complaint, he appeals. Reversed.

This is an action upon promissory notes, which was commenced by the service of summons July 5, 1897, the complaint being duly verified. The defendant Grant appeared and answered October 2, 1897, setting up various defenses, which are not necessary to be stated. On the 7th of March, 1903, an order was made by the circuit court, without notice, ordering judgment of dismissal of the complaint, the same being based upon an affidavit of J. V. Quarles, Jr., one of the defendant's attorneys, stating the date of the service of the summons and the date of the joining of issue, and that the action had not been brought to trial, and that it had been more than five years since its commencement. On the 9th day of March following a motion was made by the plaintiff to vacate the said order of dismissal, which motion was based upon the record and the affidavit of Charles Canright, one of the attorneys for the plaintiff, in which he stated that he "has had personal charge of said action from its beginning up to the present time; that Quarles, Spence & Quarles are the attorneys for the defendant Emory L. Grant, and that Senator J. V. Quarles has had personal charge of the matter for said defendant's attorneys; that said action was begun on the 14th day of July, 1897, in the superior court of Milwaukee county, and thereafter transferred to the circuit court of Kenosha county; that issue in said action was joined on the 2d day of October, 1897; that on the 4th day of August, 1898, said action was noticed for trial, which notice was filed with the clerk of this court in time for the case to be placed on the term calendar for the September term following; that shortly thereafter negotiations were entered into between the attorneys in said action for a settlement thereof; that said plaintiff is a resident of the state of California, and said negotiations occupied a period of several months; that the offer of settlement suggested by said defendant was finally refused by said plaintiff, and the trial of said action was thereby delayed until the close of the year 1901; that thereafter Senator Quarles advised plaintiff's attorneys that he would be unable to take up said action at the March, 1902, term of said court, and at his request, on the 21st day of February, 1902, a stipulation was entered into between the attorneys herein, by which it was agreed that said action should be continued for the March, 1902, term, and placed on the calendar for trial at the September, 1902, term, and not prior thereto; that said stipulation was duly filed with the clerk of the court; that thereafter, and a few weeks prior to the September term of said court, Senator Quarles again advised plaintiff's attorneys that he could not take up said action for trial at the September, 1902, term, as he was about to go to Alaska, and asked that said action be permitted to go over until some later date, to which plaintiff's attorneys consented; that notice of trial was served upon defendant's attorneys for the present March term of said court, this being the first term following the September, 1902, term; that upon filing said notice with the clerk of this court said clerk notified plaintiff's attorneys that an order had been filed by defendant's attorneys dismissing said action for the reason that same had not been brought to trial within five years from the date of joining issue; that the procuring and filing of said order was a great surprise to plaintiff's attorneys, and without their knowledge or consent; that the reasons why said action had not been brought to trial are set forth in this affidavit, and affiant asks that said action be reinstated and placed on the calendar for trial on the regular order of the business of this court." This motion was heard March 16th, and upon the hearing thereof J. V. Quarles, Jr., filed an affidavit stating that "for the space of two years and more last past he has had personal charge of the above-entitled action; that all of the negotiations which have taken place in the above-entitled action within said period of time have taken place between this affiant, representing Em-

Digitized by Google

ory L. Grant, and Charles E. Canright, representing said plaintiff, to the best of this affiant's knowledge and belief; that the stipulation of continuance for the term referred to in the affidavit of said Charles E. Canright was entered into and signed by this affiant." After hearing, the court denied the motion, and entered judgment of dismissal, from which the plaintiff appeals.

Nath. Pereles & Sons, for appellant. Quarles, Spence & Quarles, for respondents.

WINSLOW, J. (after stating the facts). It seems very plain that upon the showing made the trial court should have vacated the order of dismissal. Our statute (section 2811a, Rev. St. 1898) provides that circuit or superior courts may dismiss, with or without notice, all actions or proceedings pending in which issue has been joined, and which are not brought to trial within five years after their commencement. Section 2832 of the same statutes provides that the court or judge may in discretion, and upon just terms, and within a year after notice, relieve a party from any judgment, order, or other proceeding taken against him through his mistake, inadvertence, surprise, or excusable neglect. The order of dismissal was properly made under the first section cited. All the facts required by the section then appeared without dispute. It appeared to be a case of sheer and inexcusable neglect. But when the application to vacate the order was made other facts appeared, which were undisputed, and very persuasive. These facts were that the action was noticed for trial in August, 1898, and that negotiations for settlement were then entered into which lasted for several months; that in February, 1902, on request of one of the defendants' attorneys, a written stipulation was made, continuing the case over the then approaching March term, and placing it on the calendar for the September term; that at some time prior to the last-named term, the plaintiff's attorneys, upon request of one of the defendants' attorneys, consented that the case might go over that term, and that the plaintiff's attorneys duly noticed it for trial at the March term, which was the next term following the September term. The March term, 1902, was within the five-year limit; the September term, 1902, and the March term, 1903, were beyond the limit. Thus it appears that the plaintiff's attorneys agreed to a continuance over the last term within the five-year limit at the request of and for the convenience of the defendant's counsel; that counsel on both sides agreed to place the case on the calendar of the first term beyond the five-year limit, and that plaintiff's counsel consented to continuance over that term to accommodate defendants' counsel. These facts can leave no reasonable doubt as to the plaintiff's right to be relieved from the order of dismissal. The statute referred to (section 2811a) was passed to punish the suitor who sleeps away his day in court, and give trial courts a certain and speedy means of clearing the records of mere deadwood, not to turn out of court a suitor who, though ready to proceed seasonably, has consented to delay in order to accommodate opposing counsel, as was shown to be the case here. This proposition seems too plain for extended discussion. The complaint was duly verified, and stated a cause of action. No further showing of merits was necessary. The court abused its discretion in not vacating its order of dismissal.

Judgment reversed, and action remanded, with directions to grant the plaintiff's motion to vacate the order of dismissal upon such terms as may be just, and for further proceedings according to law.

BARRY v. ORDER OF CATHOLIC KNIGHTS OF WISCONSIN.

(Supreme Court of Wisconsin. Oct. 20, 1903.)

MUTUAL BENEFIT SOCIETIES—CONDITIONS OF MEMBERSHIP—RELIGIOUS ORDERS—FORFEITURE—CONSTITUTIONAL LAW.

1. Plaintiff's decedent took out a membership certificate in a mutual benefit society organized for the sole benefit of practical members of the Roman Catholic Church, and in his application agreed that, if admitted he would comply with the constitution and by-laws of the order, and that on failure to do so he would forfeit his membership. The by-laws required that persons should remain practical Catholics, and communicants of the church. Decedent was afterwards married to plaintiff by a Protestant minister. *Held* that, as decedent was ipso facto excommunicated by his own act, the liability of the society ceased without an expulsion of the decedent, and plaintiff, who had been made beneficiary in the certificate by the society without knowledge of the facts, could not recover thereon.

2. The provisions of the constitution and by-laws of the order did not interfere with the liberty of conscience or freedom of worship, contrary to Const. art. 1, §§ 18, 19.

Appeal from Circuit Court, Milwaukee County; Warren D. Tarrant, Judge.

Action by Emma S. Barry against the Order of the Catholic Knights of Wisconsin. From a judgment dismissing the complaint, plaintiff appeals. Affirmed.

This is an action by the plaintiff, as widow of one James H. Barry, deceased, upon a mutual benefit certificate issued by the defendant to said James H. Barry in his lifetime. The action was tried by the court, and the facts necessary to be stated are undisputed. The defendant is a mutual benefit association incorporated under the laws of Wisconsin for the benefit of practical Roman Catholics only, and providing the death benefit of $2,000. Its articles of incorporation provide, among other things, that "a member who shall cease to be a practical Catholic or a communicant of said church, or who shall neglect to receive holy communion at least once a year, or who shall join any organiza-

tion condemned by the church, or any society using the oath of secrecy, or who shall fail or neglect to pay any assessment or dues within the time therefor prescribed, shall be discharged and expelled from membership of this order, and deprived of all benefits thereof." The constitution of the order provides, among other things, as follows: "Sec. 2. No person shall be admitted to membership in this branch unless he is a practical Catholic, and a communicant of said church, nor unless he furnish a certificate from his pastor, or the spiritual director of the branch, that he is a practical Catholic. * * * He must receive holy communion at least once a year, at Easter or thereabouts, and he shall furnish and file with the branch a certificate from his pastor or furnish other satisfactory evidence within sixty days after Easter Sunday, certifying or showing that he performed his Easter duty, under penalty of forfeiture of all benefits. * * * Sec. 40. Any member in good standing shall be permitted to remove from this state to spend any or the whole part of his life elsewhere without losing his benefits, provided he keeps his assessments and his share of the expenses of the branch to which he may belong and the expenses of the order paid up as they may become due. He must also, in every respect, comply with the constitution, laws, rules and regulations of the order and furnish to the branch of which he is a member a certificate once a year from the pastor of the parish in which he resides, that he is a communicant of said church, and that he has received holy communion at least once during the year." Upon the 24th day of October, 1885, James H. Barry, being then a single man, residing in Madison, made written application for membership in the Madison branch of the defendant corporation, in which application he stated as follows: "Having read the constitution and laws of your order, the subordinate constitution and by-laws, and being fully acquainted with the objects of your order and fully endorsing them, I desire to become a member of your branch, and of your order, and if elected eligible to membership and admitted upon examination, I do promise to faithfully carry out the principles as set forth in the constitution of your order, your subordinate constitution and by-laws; and upon any failure on my part to strictly conform to the said constitution and subordinate constitution and by-laws, that now, or may hereafter govern your order, as well as your branch, I do hereby agree to forfeit all rights to membership and benefits." Upon this application a benefit certificate was issued to him December 3, 1885, in which his father and sisters were named as beneficiaries. September 23, 1890, Barry was married to the plaintiff at Batavia, Ill., by a Protestant minister; the plaintiff having been previously married to one Moulton, whom she left in 1884, there being no evidence as to his death, or whether a divorce had been obtained. On December 19, 1891, Barry surrendered the first certificate issued, and a new certificate was issued to him, in which the plaintiff was named as the sole beneficiary; the defendant's officers not knowing at the time the fact that Barry had been married by a Protestant minister. This certificate recites that it is issued in consideration of the statements and representations made in the original application, which is made a part of the certificate, and upon the express condition that Barry should well and truly perform all of the requirements of the constitution, laws, and regulations of the order then in force or thereafter adopted; and provided that, if he did do so, and in that case only, the order would pay to the beneficiaries the death benefit. From 1893 up to his death Barry lived outside of the state. June 4, 1893, the Madison branch voted to expel him from the order because of his marriage by a Protestant minister, by which fact he ceased to be a practical Catholic. This action was claimed by the appellant to be void for lack of proper notice and other reasons. Barry died October 11, 1898. Proofs of his death in the ordinary form of life insurance proofs were tendered to the defendant's officers in due time, and refused. Said proofs contained no statements showing that Barry had performed his church duties as required by the constitution and articles of incorporation, nor that he was at the time of his death a practical Catholic. There was undisputed proof that by the laws of the Roman Catholic Church a member thereof who is married by a Protestant minister is thereby excommunicated, and the trial court found that Barry at the time of his death had ceased to be a practical Catholic, and for that reason the plaintiff was not entitled to recover, and the complaint was dismissed, and the plaintiff appeals.

Pliny B. Smith and R. B. Mallory, for appellant. Wigman, Martin & Martin, for respondent.

WINSLOW, J. (after stating the facts). There were a number of interesting questions discussed in the briefs in this case, which we have not found it necessary to consider. To our minds, a few simple propositions demonstrate the correctness of the judgment. The defendant corporation was organized for the sole benefit of members of the Roman Catholic Church, and for them only so long as they remain practical Catholics. The decedent, in his application for membership, understood this, and agreed that, if admitted, he would faithfully carry out the principles set forth in the constitution and by-laws of the order, and that upon any failure so to do he should forfeit all right to membership and benefits. This agreement became part of the contract of insurance by the terms of the certificate in

Digitized by Google

suit, and the certificate further provided that the death benefit should only be payable in case the insured should well and truly perform all the requirements on his part prescribed by the constitution, by-laws, and regulations of the order during his lifetime. Thus the liability was doubly guarded: First, by an agreement to forfeit the benefit in case of noncompliance with the laws of the order; and, second, by a clause making liability dependent upon compliance. These contract provisions are self-executing. The laws of the order provide, in terms too plain to be misunderstood, that none but practical Catholics shall be admitted to the order, and that members must remain practical Catholics and communicants of the church in order to participate in the benefits. The evidence shows that the decedent was ipso facto excommunicated and ceased to be a Catholic, practical or otherwise, upon being married by a Protestant minister. Thus, by virtue of the provisions of the contract sued on, all liability ceased, and expulsion was not necessary.

An argument is made that these provisions are contrary to the policy of the law, in that they impose a religious test, and sections 18 and 19 of article 1 of the Constitution are cited. The objection seems puerile. By these provisions no man's conscience is coerced, nor his freedom of worship curtailed. Membership is purely voluntary. If a man chooses to join an organization having such requirements, and agrees that he shall forfeit his right to benefits on failure to live up to them, he is at liberty to do so. All men may make contracts as they choose, so long as they be not contrary to law or public policy. The point has been expressly decided in other courts in accordance with these views. Franta v. Union (Mo. Sup.) 63 S. W. 1100, 54 L. R. A. 723, 86 Am. St. Rep. 611; Mazurkiewicz v. Society, 127 Mich. 145, 86 N. W. 543, 54 L. R. A. 727.

Judgment affirmed.

PERELES et al. v. LEISER et al.

(Supreme Court of Wisconsin. Oct. 20, 1903.)

MORTGAGES—FORECLOSURE—PERSONAL JUDGMENT FOR DEFICIENCY—DEATH OF MORTGAGOR—FAILURE TO FILE CLAIM IN COURT—EFFECT—APPEAL—RIGHT TO.

1. A defendant in a suit to foreclose a mortgage immediately after the sale of the premises under the foreclosure judgment appeared in the action, and moved that the order for a judgment for deficiency should be disregarded, on the ground that no personal liability existed on the debt. The court ordered judgment for the deficiency shown by the sheriff's report. *Held*, that defendant could appeal from the part of the judgment awarding a deficiency judgment.

2. Under Rev. St. 1898, § 3844, providing that any person having a claim against a deceased person who shall not exhibit his claim to the court within the time limited therefor shall be barred from recovering such demand, a mortgagee who does not present his claim against the estate of the deceased mortgage debtor within the time limited therefor cannot, in an action to foreclose the mortgage, recover a deficiency judgment.

Appeal from Superior Court, Milwaukee County; Orren T. Williams, Judge.

Action to foreclose a real estate mortgage by Max Pereles and another, as executors of the will of Benjamin Pereles, deceased, against Isador Leiser, as executor of the will of Sarah Leiser, deceased, and others. From the part of the judgment of foreclosure which orders judgment for a deficiency, defendants appeal. Reversed.

An action by respondents, commenced on August 24, 1900, to foreclose a real estate mortgage executed by Sarah Leiser, deceased, on or about the 15th day of April, 1892. The debt secured was evidenced by a note of the same date, due three years thereafter. Respondents' testator became the owner of the note and mortgage, for a valuable consideration, on the 30th day of June, 1900. No part of the principal sum has ever been paid on this note, and this action is brought to foreclose the mortgage and to collect the principal and the interest due. Sarah Leiser, deceased, was a married woman when the note and mortgage were given, and owned the real estate, which she mortgaged as a part of her separate estate. She died in the city of Milwaukee, June 16, 1895, leaving a will, which was probated September 14, 1895. Letters testamentary were issued to Isidor Leiser, the executor named in the will, who qualified, and is now the executor. The county court of Milwaukee county made an order limiting the time for presenting and filing claims against the estate of the deceased, and directed notice to be given to creditors, as required by law, requiring all creditors to file their claims on or before the second Tuesday of April, 1896. The estate of the deceased included the premises mortgaged to secure this debt. Thereafter the executor conveyed the premises to one William J. Allen, and he conveyed them, subject to this mortgage, to one George Chrest, a defendant in this action. It appears that Francesca Stroeble was the owner and holder of the note and mortgage from November 2, 1892, until she sold and assigned them to the respondents. This note was due at the time of the death of Sarah Leiser, and was not presented or filed as a claim against her estate. Respondents were awarded judgment for the amount due, with interest, and foreclosure and sale of the premises, and to have judgment for any deficiency against Isidor Leiser, as executor of the last will and testament of Sarah Leiser, deceased, and the deficiency was made a charge upon, and to be collected out of, her estate. Eaton & Bolzendahl served notice of retainer as attorneys for the executor November 23, 1901, and filed the petition of the executor, praying, in effect, that the part of the judgment ordering judgment for deficiency should be held inoperative. The sher-

Digitized by Google

iff's report of sale was made November 18, 1901, and the proceedings thereon and the executor's petition were heard by the court January 6, 1902. In this proceeding the court approved the sheriff's report, and directed that judgment for a deficiency be entered, as awarded in the foreclosure judgment, for the deficiency specified in the sheriff's report. This is an appeal from that part of the judgment of foreclosure which orders judgment for the deficiency and the order directing the amount to be entered as such deficiency.

H. L. Eaton, for appellants. W. O. Thomas, for respondents.

SIEBECKER, J. (after stating the facts). Appellant appeared by counsel in this action November 23, 1901, immediately after the sale of the premises under the foreclosure judgment. He moved upon the record proceedings and by petition that the order in the judgment for a judgment of deficiency be disregarded, on the ground that no personal liability existed on the note at the time of the commencement of this action, and that the order in the foreclosure judgment for a judgment of any deficiency should therefore be disregarded and treated as of no effect. On January 6, 1902, after hearing respondent for the entry of a judgment for deficiency on the sheriff's report, and the appellant opposing such order and judgment because contrary to law, the court approved the sheriff's report, and ordered that judgment for a deficiency be entered, as awarded in the judgment for the deficiency shown by the report of the sheriff.

It is contended that appellant cannot now avail himself of the error of the lower court in awarding judgment of deficiency. Respondent concedes no claim was filed on the note against the estate of Sarah Leiser, deceased, and when this action was commenced the time for filing claims against her estate had expired, and that he took his judgment of deficiency against appellant as executor of her estate under the judgment decreeing a foreclosure, and awarding the entry of such a judgment. We can perceive no reason why appellant after such appearance and hearing in the matter cannot avail himself of the right to appeal from that part of the judgment of foreclosure awarded against him as executor, and the order directing the entry thereof, since such appeal has been taken within the time limited by statute after the entry of judgment.

The vital question on this appeal is, was respondent entitled to recover on the note against the appellant as executor of this estate on August 24, 1900, when this action was commenced which resulted in this judgment of foreclosure and for deficiency in respondent's favor. Section 3844, Rev. St. 1898, provides: "Every person having a claim against a deceased person, proper to be allowed by the court who shall not after notice given as required by section 3840 exhibit his claim to the court within the time limited for that purpose, shall be forever barred from recovering such demand or from setting off the same in any action whatever." It was held, under this statute, that all claims against a decedent which can properly be presented against his estate must be filed for allowance with the county court upon due notice, and all claims not presented as required by section 3844 are absolutely barred, and thereby the remedy is cut off, and the right of action is extinguished. Carpenter v. Murphy, 57 Wis. 541, 15 N. W. 798; Winter v. Winter, 101 Wis. 494, 77 N. W. 883. In Eingartner v. Steel Co., 103 Wis. 373, 79 N. W. 433, 74 Am. St. Rep. 871, this court approved the doctrine as stated in Woodman v. Fulton, 47 Miss. 682, "that the bar created by the statute of limitation is as effectual as payment or any other defense, and when once vested cannot be taken away by legislative action without the defendant's consent." In this case the limitation for exhibiting a claim on this note against the estate of Sarah Leiser, deceased, had run against it before this action was commenced. Hence, there can be no judgment over for any deficiency against the appellant as the executor of her estate. The question is well settled under repeated decisions in this state, which declare, in positive terms, that after such an extinguishment of a claim, no foundation for a personal judgment remains on the note, though the right to a judgment of foreclosure of the mortgage to enforce the lien still existed, and therefore "the power to render a personal judgment in the foreclosure action cannot be exercised, because there is no longer any one personally liable to satisfy the conditions of the statute." Duecker v. Goeres, 104 Wis. 29, 80 N. W. 91.

The judgment of deficiency was without authority and therefore erroneous.

The order directing the entry of a personal judgment against Isidor Leiser, as executor of the last will and testament of Sarah Leiser, deceased, and making it a charge upon her estate, and the part of the judgment appealed from, are reversed.

MUENCH v. HEINEMANN et al.

(Supreme Court of Wisconsin. Oct. 20, 1903.)

ELEVATORS—INJURY TO LICENSEE—LIABILITY—EVIDENCE—DAMAGES—LOSS OF PROFITS—DECISION ON APPEAL.

1. In an action for injuries occasioned by a falling pulley in an elevator, statements by a copartner with the other defendants, after the accident, as to the way in which the accident was caused, and the manner in which the pulley was attached to the ceiling, are admissible.

2. In an action for injuries which disabled plaintiff from attending to his business, it is not error to permit him to state what were his customary profits from his business.

3. Where plaintiff went on defendant's premises to transact private business with the defendant's employés, in which defendant had no

¶ 3. See Negligence, vol. 37, Cent. Dig. §§ 42, 43.

Digitized by Google

interest, he was a mere licensee, though defendant directed him to use the elevator in which he was injured; and, no active negligence being shown, he was not entitled to recover for injuries sustained in using the elevator.

4. Where a special verdict has been rendered, and motion made for judgment notwithstanding the verdict, the Supreme Court, on determining that defendant was entitled to judgment, will remand, with direction to enter judgment for defendant.

Appeal from Circuit Court, Milwaukee County; Warren D. Tarrant, Judge.

Action by Joseph G. Muench against George H. Heinemann and others. From a judgment for plaintiff, defendants appeal. Reversed.

This is an action to recover damages for personal injuries. In August, 1900, and for some time prior thereto, the defendants, as partners, were manufacturers of hats in the city of Milwaukee, and at the time of the accident occupied a four-story building, and had occupied the same for about two weeks. In this building there are two freight elevators, which were moved by hydraulic power, and in each of them the shifting cable passed over a sheave or pulley at the top of the shaft, which sheave or pulley was attached to a hanger, which hanger was attached by screws to planks forming the ceiling of the shaft. The plaintiff was in the grocery business in Milwaukee, and also peddled milk from 5 a. m. to noon each day, and had for some time sold milk to the defendants' employés, and continued that practice after the defendants moved into the building aforesaid. He was accustomed to take his milk cans into the east freight elevator aforesaid, and go up to the fourth floor in the elevator, operating the shifting cable himself, and come down in the same way after delivering his milk. The milk was for the employés' convenience and use, solely, but the forewoman upon the fourth floor was accustomed to collect the money from the employés and hand it to the plaintiff, thus saving time. Plaintiff testifies that on August 3, 1900, he entered the building as usual to deliver milk, and that he met Mr. Jenner, one of the defendants' firm, who saw him using the east elevator, and directed him in the future to take the west one, as that was the passenger elevator. This statement is absolutely denied by Jenner. On the morning of August 4, 1900, plaintiff entered the building with his milk cans as usual, took the west elevator to the fourth floor, delivered his milk, and then took the elevator down again; and, when he was part way down, the sheave, over which the shifting cable ran, fell, striking him and badly injuring him. The jury returned the following special verdict: "(1) Was the plaintiff injured on the 4th of August, 1900, in defendants' place of business, while riding upon an elevator therein, by being struck by an iron wheel, called a 'shifting pulley,' which fell from the top of such elevator shaft? Answer. Yes. (2) Prior to August 4, 1900, had the plaintiff been expressly directed by the defendants, or one of them, to use the elevator which he was using when injured, and not to use the other elevator, when he desired to visit the various floors in defendants' building? Answer. Yes. (3) Was the pulley or wheel at the top of the elevator shaft, over which the shifting cable passed, fastened in an insecure and unsafe manner, so as to be likely to be pulled or to fall from its position by reason of the operation of such elevator in a proper manner, and with ordinary care and skill? Answer. Yes. (4) When the elevator and its machinery were turned over to the defendants, was there any obvious and patent defect in the manner in which such shifting pulley was fastened to the timbers at the top of the building, above the elevator shaft? Answer. Yes. (5) If you answer the fourth question 'Yes,' then had such manner of fastening existed for such a length of time that the defendants, in the exercise of reasonable diligence, knew, or ought to have known, of its existence? Answer. Yes. (6) If you answer question 4 'Yes,' was such manner of fastening the proximate cause of the plaintiff's injury? Answer. Yes. (7) Was plaintiff guilty of any want of ordinary care which contributed to produce the injury received? Answer. No. (8) What sum of money will compensate plaintiff for his injury? Answer. Five hundred dollars." Plaintiff moved for judgment upon the verdict. The defendants also moved for judgment, and, if that motion should be denied, for an order changing the answers to the second, third, fourth, and fifth questions from the affirmative to the negative, and for judgment upon the verdict when so amended; and, if both motions should be denied, the defendants then moved for a new trial. All the motions of the defendants were overruled, exception taken, and judgment rendered for the plaintiff upon the verdict, from which the defendants appeal.

Joseph B. Doe, for appellants. Doerfler, McElroy & Eschweiler, for respondent.

WINSLOW, J. (after stating the facts). There were two exceptions taken to rulings upon evidence, which will be noticed before proceeding to the main question in the case:

Both the plaintiff and his brother testified to having had conversations with one of the defendants (Mr. Jenner) after the accident, and that Mr. Jenner stated that plaintiff was struck by the falling pulley or wheel; that it was put up carelessly, and that it was just put up on a two-inch piece of pine wood with a screw, and the screw worked through; that it was negligent on the part of the elevator people to put it up in that way; and that it ought to have been bolted. Due objection and exception were taken to the reception of this evidence, but we are unable to see wherein there was any error. Jenner was one of the defendants, and

a copartner with the other defendants. His statements, which were in the nature of admissions as to the way in which the accident was caused, and the manner in which the pulley was attached to the ceiling, were certainly competent, not only as against himself, but as against his copartners.

It appeared that the plaintiff had a small grocery business, which he managed afternoons, and that he peddled milk in the morning, and that he was prevented by the accident from attending to either business for about eight weeks. He was then asked the question: "What were your customary and usual profits from your business—both the milk and grocery business—for the six months prior to the accident?" To this objection was made by defendants as incompetent, with a request to be allowed to ask the witness a question to show its incompetency, which being granted, the witness was asked if he kept books in his business, and replied in the affirmative. Upon this, the objection was renewed and overruled, and the witness answered, "About $20 per week." The witness further stated that he was obliged to employ a man for eight weeks, at an expense of $10 per week, while he was laid up. No further evidence was given as to the size or character of the plaintiff's business. In charging the jury as to the eighth question of the special verdict, the trial judge said, in substance, that compensation would consist of a reasonable physician's bill, the reasonable expense of hiring an extra man, made necessary by his injury, and such sum as would reasonably compensate plaintiff for his pain and suffering resulting from the injury, and that the jury should answer the question by taking into consideration these elements. It is claimed that it was error to admit the testimony as to the profits of the plaintiff's business. This subject had been so recently reviewed by this court in the case of Heer v. Warren-Scharf Asphalt Pav. Co., 94 N. W. 789, that any extended discussion now seems out of place. In that case it was, in substance, held that where a man not working on a salary, but managing an established business, which is mainly dependent on his personal exertions, has been disabled, and sues to recover damages for the injury, it is competent to show the character and magnitude of the business, and to that end to show the capital and assistance employed in the business, also the quality and amount of the plaintiff's services in the business before the accident, and the amount of the profits of the business, not for the reason that such profits are in any respect elements of damage, nor that their loss of impairment can be proven because they represent interest on the capital employed, the value of the good will, and perhaps other elements, in addition to the value of the personal services of the plaintiff, but for the reason that all these elements, when known, are truly descriptive of the quality of the service of which the plaintiff was capable before his injury, and thus tend to throw light on his earning capacity. Of course, all of the elements above named are essential, and, in the orderly trial of a case, the proof of the amount of profits should not be made until the other necessary elements are shown. This, however, is simply a question of the order of the proof, which is largely in the discretion of the court, and it is manifest that all the elements cannot be proven in one breath; nor was any objection made upon this ground, but simply upon the ground, apparently, that the books were the best proof of the fact. Had objection been made on the ground that the preliminary facts had not been shown, or had motion been made to strike out on that ground, it may well be that the objection should have been sustained, or the proof stricken out; but, in the absence of such objection or motion, we cannot say there was affirmative error in the ruling, especially in view of the fact that the charge of the court was entirely correct, and did not allow the consideration or recovery of loss of profits as an element of damage.

The main question in the case, however, is whether, under the facts testified to by the plaintiff himself, and found by the jury, there is any liability shown; and this depends upon the question whether, under those facts, the plaintiff was a mere licensee, or one who was upon the premises by invitation, express or implied. If he was a mere licensee, there can be no recovery, because a mere licensee takes the premises as he finds them, and the licensor owes him no duty, save to refrain from acts of active negligence rendering the premises dangerous. Cahill v. Layton, 57 Wis. 600, 16 N. W. 1, 46 Am. Rep. 46. If, on the other hand, he was more than a mere licensee, and was on the premises by invitation, express or implied, the defendants owed him the duty of exercising ordinary care to keep the premises in safe condition for use by persons themselves exercising ordinary care. Gorr v. Mittlestaed, 96 Wis. 296, 71 N. W. 656. Mere permission or license does not imply invitation. When that fact alone appears, the permitted person is a mere licensee; but when it is shown that the permitted person enters on the premises in the ordinary way to transact business with the licensor, or that the object of his visit is one in which there is mutuality of interest between licensor and licensee, then the permitted person ceases to be a mere licensee, and becomes not only a licensee, but an invited person, to whom the duty of exercising ordinary care is owing. Hupfer v. Nat. D. Co., 114 Wis. 279, 90 N. W. 191. In the present case it appears without dispute that the plaintiff went upon the premises for the transaction of private business of his own with the defendants' employés, in which the defendants themselves had no interest, and up to the time, at least,

Digitized by Google

when the defendant Jenner, as alleged and found, directed him to use the west elevator, he was a mere licensee; and the simple question presented is whether that direction constituted an invitation, either express or implied. We have been unable to see how it can be so construed. True, it was a permission, but a mere licensee has permission. It substituted affirmative consent for mere sufferance, but simple consent is not invitation, express or implied. It was as if Jenner had said, "You are at liberty to use this elevator in transacting your own business with my employés." How can this be construed as invitation, express or implied? There was still no mutuality of interest in the object of the plaintiff's visits, nor any express or implied request to continue them, but only affirmative permission in place of tacit sufferance. We are referred to the case of Ill. Cent. Ry. Co. v. Hopkins (Ill.) 65 N. E. 656, as sustaining the idea that there was implied invitation in the present case. That case certainly carries the rule very far, and furnishes some ground for the contention made here; but the decision was placed upon the ground that mutuality of interest was shown, and hence that there was implied invitation, and we are unable to find any such element in the present case. The result is that, in any aspect of the evidence, the plaintiff was a mere licensee upon the premises; and, no active negligence being shown, he cannot recover. We have found no other exceptions in the record which require discussion.

The question as to whether the case should be sent back for a new trial, or for the entry of a judgment in favor of the defendants, is not entirely clear. The ordinary rule in jury cases is that upon reversal for error they will be remitted to the trial court for a new trial; but where a special verdict has been rendered, and the appellant has moved in the trial court to change the answers to certain questions, and for judgment on the verdict when so changed, this court will, on reversal, send the case back with directions to enter judgment according to the motion, if it be held that the motion should have been granted. Conroy v. C., St. P., M. & O. Ry. Co., 96 Wis. 243, 70 N. W. 486, 38 L. R. A. 419; Keller v. Schmidt, 104 Wis. 596, 80 N. W. 935. In the present case there were motions to change the answers to questions 2 to 5, inclusive, and for judgment on the verdict when so amended; but the difficulty is that there was evidence in support of all these answers, and hence the motions were properly overruled. The defendants, before making these motions, however, had moved for judgment notwithstanding the verdict; but here we are met with the proposition broadly stated in Sheehy v. Duffy, 89 Wis. 6, 61 N. W. 295, and reiterated in the Conroy Case, that the defendant cannot move for judgment notwithstanding the verdict. This was a technical rule of the ancient practice, the reason for which is found in finespun distinctions, more fanciful than convincing. It seems to sacrifice the substance of things to mere form. The substance of the requirement is that the appellant should move for judgment after the verdict is in, so that the trial court may have an opportunity to pass on the question. To say that when he moves for judgment on the verdict this court will, on reversal, direct the judgment, but will refuse it when he moves for judgment notwithstanding the verdict, savors extremely of legal hairsplitting. In either case the trial court is moved to grant the very judgment which we now say should have been granted, and we have concluded to overrule the case of Sheehy v. Duffy upon this point.

Judgment reversed and action remanded, with directions to enter judgment for the defendants.

EGGETT v. ALLEN.

(Supreme Court of Wisconsin. Oct. 20, 1903.)

MALICIOUS PROSECUTION — EVIDENCE — INSTRUCTIONS — MALICE — PROBABLE CAUSE—PUNITORY DAMAGES—EXCESSIVE DAMAGES.

1. In an action for malicious prosecution because of defendant having prosecuted plaintiff for obtaining property under false pretenses and for embezzlement, arising out of a land deal whereby defendant contracted to sell land to plaintiff, evidence that the agent, placed on the land by defendant, prohibited plaintiff, after the second prosecution, from going on the land, was admissible.

2. The decision of the Supreme Court on appeal, on a question arising on the trial of a case, is the law of the case on a subsequent trial thereof.

3. In an action for malicious prosecution, the justice's minutes of the testimony of complainant in the criminal case was inadmissible.

4. The admission, in an action for malicious prosecution, in evidence, the justice's minutes of the testimony of the complainant in the criminal case, was not prejudicial error where it was admitted or shown by uncontradicted evidence that the complainant testified substantially to all the facts appearing in the minutes.

5. Probable cause is such a state of facts in the mind of the prosecutor as will lead a man of ordinary caution and prudence to believe or entertain an honest and strong suspicion that the person arrested is guilty; but mere belief of guilt, however strong and honest, will not constitute probable cause unless founded on circumstances sufficient in reason to warrant it.

6. In malicious prosecution malice may consist of any motive other than a desire to bring a guilty party to justice.

7. Whether a prosecution is malicious is a question of fact and law, the jury determining whether the prosecution was begun for an unlawful purpose; and, when this is decided in the affirmative, the law decides that in such a case there was legal malice, so that if the jury should also find want of probable cause the cause of action is established.

8. A discharge of defendant in a criminal prosecution is prima facie evidence of want of probable cause, though the examining magistrate failed to certify that the complaint was malicious and without probable cause, and did not render judgment for costs against complainant, as permitted by Rev. St. 1898, § 4791.

¶ 5. See Malicious Prosecution, vol. 33, Cent. Dig. §§ 26, 27.

Digitized by Google

9. The error, if any, in an instruction, in an action for malicious prosecution, that defendant was liable if he either commenced the prosecutions himself or authorized his attorney to do so, if the cause of action was in other respects proved, and even if the signature to the criminal complaint was not defendant's, but he was advising the prosecution and taking part therein, he was liable, and the jury might consider the question whether he signed the complaint, and what he supposed as to the nature of the proceedings, as bearing on the question of malice, as limiting the jury to a consideration of the subject of malice alone, was cured by another instruction, that the jury might consider what transpired between defendant and his attorney in deciding whether defendant acted maliciously and without probable cause.

10. An instruction, in an action for malicious prosecution, authorizing punitive damages if defendant, without probable cause and maliciously, caused the arrest of plaintiff, was not erroneous for failing to state that, if the prosecution was commenced by an agent of defendant without his direction, then defendant must have ratified the act in order to be liable, where there was no question of prosecution by an agent submitted to the jury.

11. In actions for malicious prosecution, where plaintiff recovers at all, punitory damages may be awarded, at least in cases where the prosecution was begun or actively carried on by defendant, and was not the unauthorized and unratified act of an agent.

12. In an action for malicious prosecution, based on defendant maliciously and without probable cause having prosecuted plaintiff on the charges of obtaining property under false pretenses and embezzlement, an award of $1,000 for damages on the second trial of the action was not excessive.

Appeal from Circuit Court, Clark County; James O'Neill, Judge.

Action by Alfred Eggett against G. W. Allen. From a judgment for plaintiff, defendant appeals. Affirmed.

R. J. MacBride, for appellant. J. R. & C. R. Sturdevant, for respondent.

WINSLOW, J. This is an appeal from a judgment in favor of the plaintiff in an action for malicious prosecution. The complaint contained two counts—one for a prosecution for obtaining money under false pretenses, and the other for a subsequent prosecution for embezzlement. The action was once tried, and a judgment for the plaintiff was reversed by this court. 106 Wis. 633, 82 N. W. 556. Upon the second trial the jury returned a verdict for the plaintiff, assessing his damages at $300 upon the first cause of action, and $700 upon the second. The pleadings are the same as upon the former appeal.

A number of exceptions were taken, which will be discussed as far as seems necessary. The difficulties between the parties arose out of a real estate deal, March 30, 1896, by which Allen contracted in writing to sell to Eggett 80 acres of land for $1,350, of which $100 was paid down, and the balance was to be paid in annual installments, running through five years; it being further agreed that 60 per cent. of the proceeds of any timber taken off the land by Eggett should be paid to Allen. There was evidence tending to show that Eggett cut considerable timber from the land during the following winter and did not pay any part of the proceeds to Allen. In March, 1897, Allen, learning this fact, consulted G. I. Follett, an attorney at Loyal, Clark county, and on the 23d day of March, 1897, a criminal complaint, purporting to be signed by Allen, was filed before G. W. Barker, a justice of the county, charging Eggett with having obtained the land contract on the false and fraudulent representation that he (Eggett) was more than 21 years of age, when in fact he was a minor. Allen denied having signed this complaint or having had anything to do with the prosecution thereof. The plaintiff's claim in the present case was that both of the prosecutions complained of were instituted by Allen for the sole purpose of collecting the money due from the sale of the timber cut on the property by Eggett, and hence malicious. In attempting to prove this element of malice, the plaintiff testified that after the second prosecution had ended Allen had a man on the land in question plowing, and that this man forbade him (Eggett) from going on the place. Motion was made to strike out that part of the answer about the man forbidding Eggett going on the place, but the testimony was allowed to stand, and exception taken. We can see no error in the ruling. If Allen himself had forbidden the plaintiff from going on the place, it would certainly be admissible, as throwing some light upon Allen's motives in the prosecution; and, when it appeared by positive testimony that he (Allen) had placed a man on the place to cultivate it, we think that the act or statement of that man in refusing to allow Eggett on the place must also be admissible upon very familiar principles of agency.

The plaintiff was asked upon cross-examination whether he did not vote at the presidential election in November, 1896, and an objection to the question was sustained and exception taken. Whatever our views of the relevancy of this question might be as an original proposition, it is sufficient now to say that the same objection was sustained upon substantially the same record, so far as this point is concerned, upon the former appeal, and the ruling was assigned as error, and this court held that, even if erroneous, the ruling was not prejudicial. This settles the question for this case, and renders any discussion of it unnecessary.

The plaintiff introduced the record of the justice in the embezzlement prosecution, and as a part of it the justice's minutes of the testimony taken, which consisted simply of the evidence of the defendant, Allen. Objection was made to the reception of the minutes, but it was overruled, and this ruling is now claimed to be error. Doubtless the ruling was erroneous. If it became necessary to show what was sworn to on that hearing, it should have been done by examination of the justice himself, or of some witness who

Digitized by Google

heard it. Zitske v. Goldberg, 38 Wis. 216. However, there was no prejudicial error in admitting it. It was admitted that Allen did testify as a witness on that hearing, and all the facts which appear in the minutes were either admitted or testified to without contradiction on this trial, except the statement that Eggett was not apprenticed to the defendant, and we cannot regard this as of sufficient moment to be seriously considered as a ground of reversal. We have found no prejudicial error in the remaining exceptions to rulings on evidence, and do not deem them of sufficient importance to review.

The court charged the jury on the subject of probable cause as follows: "Probable cause has been defined to be such a state of facts in the mind of the prosecutor as would lead a man of ordinary caution and prudence to believe or entertain an honest and strong suspicion that the person arrested is guilty. * * * Whether the facts known to the defendant were such as to lead him, as a man of ordinary caution and prudence, to believe and entertain an honest and strong suspicion that plaintiff was guilty of either charge is submitted to the jury, to be decided as a question of fact." Inasmuch as the foregoing definition was approved on the former appeal, there can be no question of its correctness so far as this case is concerned, nor do we see any fault to be found with it, even if the question were open for discussion. The radical difference between this definition and the one which was condemned on the former appeal is apparent at a glance.

In this connection the court also charged as follows: "Mere belief of the defendant in plaintiff's guilt, however strong, sincere, and honest, will not constitute probable cause, unless founded on circumstances sufficient in reason to warrant it." This, also, is attacked as erroneous, but it is manifestly correct, and merely a corollary of the propositions previously cited.

Upon the subject of malice, the court charged as follows: "Malice may consist of any motive other than a desire to bring a guilty party to justice. A prosecution is malicious when actuated by hostile or vindictive motive, provided there is also a lack of probable cause, as is hereinafter explained. A prosecution instituted willfully and purposely, to gain some advantage to the prosecutor, or through mere wantonness, or carelessness, if it be at the same time wrong and unlawful, within the knowledge of the actor, and without probable cause, is, in legal contemplation, malicious."

The court also repeated the substance of the foregoing propositions in different phraseology in other instructions, and it is claimed that these instructions are erroneous, in that the facts named do not constitute malice as matter of law, but that they are only evidence from which the jury may find or infer if they choose, and hence that the province of the jury was invaded by the instructions.

The instructions given were evidently taken from the Am. & Eng. Ency. of Law (2d Ed.) pp. 675, 676, and they correctly state the law as we understand it. If the criminal law be set in motion for the purpose of collecting a debt, or compelling the delivery of property, or to accomplish some other ulterior and unlawful purpose, then it is begun maliciously as much as though inspired by hatred or revenge. Whether the prosecution in a given case be malicious or not is a mixed question of fact and law. The jury are to determine the question of fact, namely, whether it was begun for a vindictive, ulterior, or unlawful purpose, and when they decide that question in the affirmative the law steps in, and says that in that case there was legal malice, and if the jury also find lack of probable cause the law then says that the cause of action is complete. Such was the purport of one of the instructions approved by this court in the case of Spain v. Howe, 25 Wis. 625, and we are not aware that the principle has been questioned since that time. It was approved in Lueck v. Heisler, 87 Wis. 644, 58 N. W. 1101, and the criticism of the last-named case in Strehlow v. Pettit, 96 Wis. 22, 71 N. W. 102, in no wise affected this proposition.

It appears by the evidence that, in the first of the criminal prosecutions complained of, Eggett was discharged from custody because the evidence was not sufficient to convict, but no certificate was made that the complaint was willful and malicious and without probable cause, nor was judgment for costs rendered against the complainant as permitted by section 4791, Rev. St. 1898. The court charged the jury that this discharge was prima facie evidence, though not conclusive, of want of probable cause, and this instruction was vigorously attacked. The respondent relies upon the case of Bigelow v. Sickles, 80 Wis. 98, 49 N. W. 106, 27 Am. St. Rep. 25, in support of the instruction given. It is said, however, by appellant that the Bigelow Case was a case where the justice made the certificate of the presence of malice and want of probable cause, and hence that it is not applicable to the present case. It is true that the Bigelow Case might have been decided upon the narrow ground that the certificate aforesaid was made, but the difficulty is that the court did not so treat it, but, on the contrary, after reviewing the authorities on the effect of a simple discharge upon a preliminary examination, and recognizing that there was a conflict, deliberately adopted the broad doctrine that such a discharge was prima facie evidence of want of probable cause in all cases whether the certificate aforesaid was made or not. Whatever might be our opinion upon the question as an original proposition, we do not feel called upon to overrule that decision now. It was not shaken by the decision in Cullen v. Hanisch, 114 Wis. 24, 89 N. W. 900. It has doubtless been acted upon by trial courts many times since it

Digitized by Google

was made, and we do not feel that there are any considerations so weighty in character as should compel us to disregard the doctrine of stare decisis. If the Legislature deems the rule unwise, it can easily change it.

The following instructions were given by the court: "There is evidence tending to show that a Mr. Follett acted as attorney for the defendant in the proceedings before Mr. Barker. Of course, the defendant is liable if he either commenced these prosecutions himself or authorized and directed his attorney to do so, if in other respects the cause of action stated in the complaint is proved. * * * Now, even if the signature to this complaint is not defendant's, yet if the defendant was there counseling and advising the prosecution of the plaintiff, and taking part in maintaining the prosecution, he would be just as liable as if he signed the complaint. However, you may consider the question whether he signed the complaint, and what he supposed as to the nature of the proceedings, whether they were tort or criminal in their nature, as bearing on the question of malice." Both of these instructions were excepted to, but we have been unable to see that they are in any wise erroneous. It is said that the last clause quoted is objectionable because limiting the effect of the supposition in Mr. Allen's mind as to the nature of the proceedings to its bearing on the question of malice, whereas it also had a bearing on the question of probable cause. Obviously, its most important bearing must be on the question of malice; but, even if it be conceded that it might also be considered on the question of probable cause, still this inaccuracy is cured by a subsequent portion of the charge, where the court informed the jury that they might consider what transpired between Allen and his attorney, Follett, in deciding whether defendant acted maliciously and without probable cause. Inasmuch as it appears that whatever supposition Mr. Allen had as to the nature of the proceedings was gathered from his conversation with Follett, it seems evident that the question was fully covered.

Upon the question of punitory damages, the court charged the jury as follows: "If you find that the defendant, without probable cause, and maliciously, caused the arrest of the plaintiff, you are authorized to go further, and award punitory damages in such sum as will be a warning to defendant and all other persons not to commit similar wrongs, and consequently such damages, to be effectual, must have some relation to the financial ability of the defendant. It is on this theory that evidence as to defendant's financial ability has been admitted." This charge is attacked on several grounds. It is said that, if either prosecution was commenced by Follett or some other agent without Allen's direction, then it must be shown that Allen ratified the act in order to charge him with punitory damages. That this is the rule with regard to a principal's liability for the unauthorized torts of his agent there can be no doubt. Robinson v. Railway, 94 Wis. 345, 68 N. W. 961, 34 L. R. A. 205, 59 Am. St. Rep. 897. But the complete answer to the objection is that there was no question of prosecution by an agent admitted to the jury in this case. The charge of the court was explicit, and did not allow the jury to return a verdict for the plaintiff at all unless it was shown that the plaintiff himself either commenced or authorized the commencement or actively participated in the prosecutions. So there was no recovery possible under the charge, if the prosecutions were the unauthorized acts of an agent, and hence the question of ratification cut no figure.

Of course, punitory damages are not necessarily to be recovered even if the verdict be for the plaintiff, and we should have been better pleased had the court more clearly informed the jury that the matter was in their discretion, and that they might allow them or not as they thought proper; still the expression used by the court that they "were authorized" to award them is strictly correct, and does not carry the implication that they must be awarded. Again, it is said that there must be something more than mere malice in order to justify the imposition of punitory damages; that there must, in effect, be wantonness or an aggravated degree of malice. We do not understand this to be the rule. The rule is generally stated to be that where an injury is committed with wantonness or malice, or under circumstances of insult or indignity, punitory damages are proper. In the case of malicious prosecution, malice is an essential ingredient in the cause of action, without which there can be no recovery, even of compensatory damages. Hence it must follow that the recovery of punitory damages is proper in case of malicious prosecution, where the plaintiff recovers at all, at least in all cases where the prosecution was begun or actively carried on by the defendant himself, and is not the unauthorized and unratified act of an agent. Winn v. Peckham, 42 Wis. 493.

Some exceptions were taken to the conduct and remarks of counsel upon the trial, but we do not consider them tenable nor of sufficient importance to state in detail. We have been unable to see that the damages are so large as to be considered excessive.

Judgment affirmed.

WALDUM v. HOMSTAD.

(Supreme Court of Wisconsin. Oct. 20, 1903.)

BENEFICIAL ASSOCIATIONS — CERTIFICATES — BENEFICIARIES — CHANGE — METHOD — COMPLETION BEFORE MEMBER'S DEATH.

1. Where a beneficial association had made no rules or regulations governing the change of beneficiaries by members, expressly authorized by Rev. St. 1898, § 1955c, as amended by L. 1899, p. 138, c. 101, a member of such association is entitled to change the beneficiar

in his certificate according to the custom prevailing in such association.

2. A member of a beneficial association, on being stricken with disease, applied to his physician to change the beneficiary in his certificate to plaintiff. Twelve days before his death he wrote to the grand secretary of the association, who had authority to make the change, requesting the same, and such secretary answered, directing a delivery of the old certificate and a payment of 50 cents to the local secretary, who would forward the same to the grand secretary, from whom deceased would get a new policy, making the change. Ten days before deceased died he fully complied with such direction, but the local secretary failed to forward the old certificate, and a new certificate was not granted until after decedent's death. *Held* that, since decedent had done all acts to complete the change, and the only acts remaining to be done were ministerial acts of officers of the society, the change would be regarded as made.

Appeal from Circuit Court, Jackson County; James O'Neill, Judge.

Action by Anne Waldum against E. A. Homstad, as administrator of Elias Sklet, deceased. From a judgment in favor of plaintiff, defendant appeals. Affirmed.

This action was commenced to recover $950 life insurance under a certificate issued by the Independent Scandinavian Workingmen's Association to one Elias Sklet, payable to his estate. It appears from the record, and is undisputed, or found by the court, in effect, that the grand lodge of such association is the governing body, and is authorized to issue certificates to persons who become members thereof on the mutual assessment plan, entitling such members to participate in the beneficial fund of the order to the amount specified in such certificates; that January 13, 1900, Elias Sklet, since deceased, became a member of such association by initiation in Nora Branch No. 10 of the order, and had a certificate issued to him to the amount of $1,000, payable at his death to his estate; that up to the time of his death he paid all sums necessary or required of him to be paid, and was at the time of his death in good standing with the order; that there were no provisions of any kind in the constitution, by-laws, rules, or regulations of the order in any manner providing for or restricting the right of persons insured therein to change the beneficiary by them named in their certificate of insurance; that ever since the organization of the association it had been customary to change the beneficiary at the pleasure of the insured by surrendering the old certificate and the payment of a fee of 50 cents, and a request to have the beneficiary changed to some other person than that named therein, and that Elias Sklet knew that such was the custom, and had such custom in mind before his death. Sklet was a laboring man, and made his home with the plaintiff, who kept a boarding house, to whom he paid his board when he had the money, but when he had none he was cared for by the plaintiff just the same. He had no relatives in this country, but had two sisters in Norway, whom he seldom heard from. Sklet came to the home of the plaintiff Sunday evening September 15, 1901, sick with typhoid fever, and took to his bed, and died September 29, 1901. One Dr. Krohn attended to him during his illness, and while so attending him, and on Monday, September 16, 1901, Sklet spoke to him about his insurance, and on the following day directed Dr. Krohn to write a letter to P. J. Smith, the grand secretary of the order, to change the beneficiary named in his policy from his estate to the plaintiff, which letter was written and signed by the deceased on that day. P. J. Smith wrote a letter in answer thereto on Wednesday, September 18, 1901, directing Sklet to send his old policy to one H. A. Johnson, together with 50 cents, and that he could then get a new policy from him. On the same day Sklet gave the letter from Smith, together with his old certificate and 50 cents, to Dr. Krohn, and requested him to take the same to the local secretary, H. A. Johnson, for the purpose of having the beneficiary changed as directed, which the doctor did by handing to Johnson, the next day (Thursday, September 19, 1901), the letter, the old certificate, and the 50 cents, stating that Sklet wanted a new policy, and the beneficiary changed from his estate to the plaintiff; and that Johnson took the letter, the certificate, and the 50 cents, and kept them from that time to the date of the trial, and neglected to send them to the grand secretary of the order, and so prevented the change from being made, as it would have been had he observed such request. On Friday, September 20, 1901, Dr. Krohn informed Sklet that the local secretary, Mr. Johnson, had not complied with the request, but Sklet said that it was all right, and that Krohn had done just as he wanted him to do. On that same day the local secretary wrote the president of the order, stating that application had been made to change the beneficiary, but omitted to inform the president that a written, formal application had been made, or that the old certificate and 50 cents had been delivered to him with a request to make the change. The president answered the local secretary, and made objections to the manner in which an attempt to so change the beneficiary had been made, and advised the local secretary not to do anything with the matter until further instructions. From Saturday, September 21, 1901, until the date of his death, September 29, 1901, Sklet was delirious, and nothing more was done towards changing the beneficiary named in the certificate. October 5, 1901, proofs of the death of Sklet were made by the officers of Nora Branch No. 10 of the order. October 7, 1901, the plaintiff notified the Independent Scandinavian Workingmen's Association and the grand lodge that she was the beneficiary under such certificate, and was entitled to the money payable thereunder, and she thereupon filed a verified and formal claim there-

Digitized by Google

for. By the terms of the order, when a member dies who has no family, the branch lodge to which he belongs at the time of his death attends to and pays the expenses of his funeral and burial, which the Nora Branch No. 10 did, amounting to $50, which amount was deducted from the $1,000 payable under the certificate. November 20, 1901, the defendant, Elias A. Homstad, was appointed special administrator of the estate of Sklet, deceased, and on the same day he demanded of the order the amount payable under the insurance certificate, which was refused on the ground that the plaintiff also claimed the same, and no payment thereof would be made to any one until determined by the court. December 31, 1901, this action was commenced by the plaintiff against the association to recover the $950. January 7, 1902, the defendant, Elias A. Homstad, was appointed administrator of the estate of the deceased, and duly qualified as such, and on the same day he demanded of the order the amount payable under the insurance certificate, which was refused, and thereupon such administrator began an action in the circuit court against said association, which action is still pending under a stay of proceedings by order of the circuit court. January 29, 1902, the court ordered the association to pay the money into court, which it thereupon did do. Sklet was of sound and disposing mind and memory up to and including Friday, September 20, 1901, and in all respects mentally competent to make a change of beneficiaries in his certificate in such order; that Sklet pursued the course required by his policy and the rules and customs of the order, and fully complied with the written direction of the grand secretary of the order, and did all in his power to so change the beneficiary in his certificate from his estate to the plaintiff; and that the only thing remaining to be done were the formal acts on the part of the association, concerning the doing of which it had no discretion, but must act as directed by Sklet. As conclusions of law the court found that September 19, 1901, Sklet changed the beneficiary named in his certificate from his estate to the plaintiff; that December 5, 1901, the plaintiff was entitled to receive the amount of such certificate, $950; that the plaintiff is entitled to judgment in the amount of $950, together with costs and disbursements in this action, to be taxed against the defendant, Elias A. Homstad, as administrator of said estate. From the judgment entered thereon accordingly the defendant, Elias A. Homstad, brings this appeal.

Pope & Pope, for appellant. Frawley, Bundy & Wilcox, for respondent.

CASSODAY, C. J. (after stating the facts). There is no bill of exceptions. The facts are all found by the court, and, of course, are undisputed. It stands admitted that the association was authorized to issue certificates to its members, according to its constitution, by-laws, and rules, on the mutual assessment plan, entitling such members to participate in the beneficial fund of the order for the amount specified in such certificate. Such was the certificate in the case at bar, issued by the association to the deceased, Elias Sklet, and payable at his death to his estate. The question presented is whether, from the facts found, the deceased succeeded in changing the beneficiary from his estate, named in his certificate, to the plaintiff in this action. Twelve days before his death he wrote to the grand secretary of the association requesting him to change the beneficiary in his policy from his estate to the plaintiff in this action, giving his reasons therefor, and requesting prompt attention. The next day the grand secretary wrote to the deceased to the effect that, in order to get his policy changed, he must give the old policy and 50 cents to his local secretary, therein named, and that such local secretary would then forward the same to him, the grand secretary, and that the deceased would then get a new policy from him. It is undisputed that 10 days before Sklet died he fully complied with such direction of the grand secretary. The contention is that the attempted change of the beneficiary was ineffectual, because the local secretary never forwarded the old certificate or the 50 cents to the grand secretary. There is no claim nor pretense that the grand secretary did not have authority to receive the old certificate and the 50 cents and change the beneficiary, as requested by the deceased 12 days before his death. That he had such authority is manifest from the findings. Having such authority, it was competent for him to direct the deceased, as he did, to deliver the certificate and 50 cents to the local secretary, instead of himself. Having given such direction, and the same having been fully complied with by the deceased, the transaction was the same, in legal contemplation, as though the deceased had delivered the certificate and the 50 cents to the grand secretary personally, and requested him to make such change. In his letter giving such direction the grand secretary informed the deceased that upon his compliance with such direction he would get a new policy from him, the grand secretary. It is found that there is nothing in the constitution, by-laws, rules, or regulations of the order restricting the right of members to make such change. There is nothing in the statutes to prevent such change. On the contrary, the statute expressly declares that: "Any member may change the beneficiary named in his certificate or policy without the consent of such beneficiary, by complying with the by-laws of the society, order or association which issued the same." Section 1955c, Rev. St. 1898, as amended by chapter 101, p. 138, Laws 1899. Since the right of members to make such change was not restricted by anything in the statutes, nor

Digitized by Google

in the constitution, by-laws, rules, or regulations of the order, nor in the contract with the deceased, it is obvious that he was not precluded from making the change in the manner indicated merely because the association had not prescribed a different method for making such change. The right of the assured to make such change, under similar circumstances, has frequently been recognized and sanctioned by this and other courts. Rawson v. Milwaukee M. L. Ins. Co., 115 Wis. 641, 646, 92 N. W. 378, and cases there cited. Thus it is held in Indiana that: "Where a member of a benefit association has a right to change the beneficiary named in his certificate, and no prescribed mode of making the change is shown, an assignment of the certificate, with directions to the association to pay the proceeds to the assignee, effects a change." Milner v. Bowman, 119 Ind. 448, 21 N. E. 1094, 5 L. R. A. 95. See, also, Niblock, Ben. Soc. & A. Ins. §§ 212, 214.

The only remaining question is whether what was done by the deceased under the direction of the grand secretary had the effect to change or modify the contract. It is said by a learned text-writer that: "When a member has done all that he is required to do under the contract to effect a change of beneficiaries, the change will be deemed complete, even though some ministerial acts of the officers of the society are still to be performed." Section 223, Niblock, Ben. Soc. & A. Ins. This court has recently held that, where the insured has done every substantial act required of him, and dies before the new certificate is actually issued, and only formal acts on the part of the association remain to be performed, the change will be considered to have been made, even in an action at law. McGowan v. The Supreme Court of the I. O. F., 104 Wis. 173, 80 N. W. 603; Opitz v. Karel, 95 N. W. 948. To the same effect. Hirschl v. Clark, 81 Iowa, 200, 47 N. W. 78, 9 L. R. A. 841; Schmidt v. Iowa K. P. Ins. Ass'n, 82 Iowa, 304, 47 N. W. 1032, 11 L. R. A. 205; Carpenter v. Knapp, 101 Iowa, 712, 70 N. W. 764, 38 L. R. A. 128. We must hold that the beneficiary was effectually changed from the estate of the deceased to the plaintiff.

The judgment of the circuit court is affirmed.

HUPFER v. NATIONAL DISTILLING CO.

(Supreme Court of Wisconsin. Oct. 20, 1903.)

BURSTING OF VAT—NOTICE OF INJURY—EVIDENCE — DECLARATIONS OF SERVANT — RES GESTÆ — ACTS OF SERVANT — AUTHORITY — IDENTIFICATION — NONSUIT — APPEAL—REVIEW—FINDINGS.

1. An order of nonsuit at the close of plaintiff's evidence, in an action based on negligence, is error if any reasonable probability of defendant's negligence may account for the event by inference from the evidence within plaintiff's control, since in that case the defendant should be put to its proofs to supply the facts as to its own conduct.

2. Plaintiff's intestate went to defendant's distillery to purchase distillery slops, and was allowed, in accordance with custom, to go on top of the vat to stir the same. While he was so engaged the vat collapsed by the breaking of the hoops, and intestate was so scalded by the slops that he subsequently died. The vat was about five years old, was maintained out of doors, and the slops frequently overflowed and percolated through the wood, the effect of which disintegrated the hoops. The wood had not been painted, and the hoops had not been painted for at least two years prior to the collapse. Defendant's officers had knowledge of the tendency of the hoops to rust, and thereby become weakened, and, though the rusting of the hoops was mainly on the inside, it was discoverable from the outside of the bands. *Held*, that such facts tended to show defendant's negligence, and hence that an order directing a nonsuit was error.

3. Plaintiff's intestate was thrown into a tank of distillery slops by the bursting of the tank, and was carried some distance by the outflow of the liquid. Defendant's servant immediately went to deceased's assistance, and pulled him out of the scalding liquid, and while he was so doing stated to one, who immediately went to the place of the accident on seeing the occurrence, that such servant had knowledge of the defective condition of the vat and the hoops which held the same. *Held*, that such statement was admissible as res gestæ.

4. In an action for the killing of plaintiff's intestate by the bursting of a vat containing scalded distillery slops, evidence that defendant's chief engineer, who was superintendent of machinery, and over every person employed by defendant except the expert chemists, pointed out to a photographer the hoops which had surrounded the vat shortly after the accident was admissible for the purpose of identifying the hoops photographed as those that surrounded the vat.

5. A ruling on the question of identification, as preliminary to the admissibility of photographs, will be reversed only where the appellate court can say that the ruling is contrary to a very clear preponderance of the evidence.

6. Under Rev. St. 1898, § 4222, providing that no action for personal injuries shall be maintained unless notice in writing, signed by the party damaged, his agent or attorney, shall be served on the person by whom it is claimed such damage was caused, etc., a notice describing an accident in which plaintiff's intestate was injured, declaring that he was instantly killed, and that satisfaction is claimed by H., administrator of his estate, and signed by C., attorney for claimant, was not objectionable on the ground that it was not given by the beneficiaries, and did not notify the defendant of a claim for their damages.

Appeal from Superior Court, Milwaukee County; James O'Neill, Judge.

Action by George Hupfer against the National Distilling Company. From a judgment of nonsuit, plaintiff appeals. Reversed.

This action is between the same parties and arises out of the same facts as did that reported in 114 Wis. 279, 90 N. W. 191; this, however, being brought under section 4255, Rev. St. 1898, to recover for the benefit of the widow and children of the deceased. Simon Hupfer. The plaintiff offered evidence of a custom on the part of the defendant to sell distillery slops to the public generally from a large slop vat of about 16 feet in diameter, constructed of pine staves about 3½ inches thick, and surrounded by five iron bands or hoops 3/16 of an inch in thick-

Digitized by Google

that customers were permitted, because they would not purchase otherwise, to themselves go upon a platform adjoining the tank in order to stir up the contents while drawing it off into their own receptacles; that Hupfer, a frequent customer through a series of years, was, on September 13, 1899, upon this platform, drawing off slops, when the hoops parted, the tank collapsed, and the contents washed him from the platform and down a hill a considerable distance, until stopped by a fence, whereby he was terribly scalded, and as a result died in a few hours after removal to a hospital. The breaking of the hoops was alleged to have been caused by defendant's negligence in failing to take proper care and precautions and in omitting proper inspection, whereby they had become so weakened as to be unsafe. At the close of the plaintiff's evidence the court made an order, and later entered judgment of nonsuit, from which the plaintiff appeals.

Joseph B. Doe, for appellant. O'Connor, Schmitz & Wild, for respondent.

DODGE, J. (after stating the facts). 1. Error is assigned upon the nonsuiting the plaintiff at the close of his testimony. The rule is, of course, familiar that such an order can be proper only when the plaintiff's evidence, giving it the most favorable inferences reasonably possible in his favor, does not tend to establish his cause of action. Lewis v. Prien, 98 Wis. 87, 73 N. W. 654; Beyer v. Insurance Co., 112 Wis. 138, 141, 88 N. W. 57; Morton v. Smiley (decided Sept. 29, 1903) 96 N. W. 534. While the rule of law is the same, the practical restrictions upon the court are even greater in the face of a motion for nonsuit than they are upon the motion to direct a verdict after all the evidence is in, especially in a case of this sort, where the actual knowledge of the perils and precautions taken against them by the defendant are necessarily with it, and cannot well be made to appear in the plaintiff's case. If any reasonable probability of negligence may account for the event by inference from the evidence within plaintiff's control, the defendant should be put to its proofs to supply the facts as to its own conduct, and the plaintiff should not be nonsuited merely because he has not fully established those acts of which he can acquire knowledge only from the defendant or those in its interest. In the present case there was evidence tending to show that the vat in question was approximately five years old; that during all of its existence it had been used out of doors to contain distillery slops, which frequently overflowed and came in contact with the hoops, and which also were likely to percolate through the wood and come in contact with the interior surface of the hoops; that such slops contained acids and salts having the effect to disintegrate and eat away iron with which they came in contact, and that the officers of the defendant had knowledge of such tendency; that painting of the woodwork and the hoops would be a proper precaution against this result, whether from such chemicals or from atmospheric influence, but would have to be repeated frequently to be effective, certainly more than once a year. There was evidence tending to prove that the wooden parts had never been painted, and that the iron hoops had not been for at least two years prior to the collapse. Evidence also tended to establish that the breakage was due to the eating away of the hoops; that such rusting was mainly on the inside toward the tub, but that it was also discoverable upon the outside of the bands, and verbal testimony that in places rust had eaten away portions of the hoops, which were examined by the photographer, Breitwish. There is also the fact that the hoops did part while the tub was being used according to ordinary custom, and there was in this case, at the stage when terminated, entire absence of proof as to the ordinary life of vats of this sort or as to how often the hoops needed to be renewed. The evidence thus summarized, if believed by the jury, as it might have been, although thrown in conflict in some respects by other testimony, certainly tended to establish that the collapse of this vat was due to the weakening of the hoops from natural causes, such as might well have been anticipated, and by more diligence guarded against by the defendant, and might well have supported an inference of fact that the conduct of the defendant in permitting this condition to develop, and in exposing the decedent thereto, was not the care exercised under such circumstances by people of ordinary care and prudence. In our judgment, the order of nonsuit was erroneous. The defendant should have been put to its proof, to rebut, if it could, the inference of negligence resulting from the facts which the jury might have found at the time when the motion was made.

2. Exclusion of Evidence. (a) The first ruling complained of under this classification was upon an offer to prove a declaration made by the witness Dordel, to the general effect that he had knowledge of the defective condition of the vat and hoops. Dordel was an employé of defendant, whose duty it was to sell slops from the tank to customers, and to control the manner of delivery, i e., in permitting customers to go to the place where deceased was when injured. The circumstances of the declaration were, as related by witness Mrs. Koepp, substantially as follows: She lived across the street, less than 200 feet from the tank, saw it burst, and plaintiff's decedent disappear. She ran downstairs, out of her house, and across the street, where she met Dordel, also going to the place of the accident, with whom she went to the place where deceased lay struggling in the scalding liquid. Dordel rescued him, and brought him part way up the hill, and undertook to care for him. In the course of these transactions, and within five or ten

Digitized by Google

minutes after the bursting of the tank, Dordel made the declarations sought to be proved as part of the res gestæ. The rule that declarations which are part of the res gestæ may be given in evidence is, of course, familiar. It rests upon the theory that an event which is relevant is not complete unless the whole may be given, including the spoken words which constitute part of it. Such evidence is deemed safe because of the improbability that utterances will be untrue or fabricated while the mind of the speaker is engrossed with the act itself. The words must be part of the event, and to this end they must be so nearly concurrent in time as to warrant belief that they are spontaneous utterance of the thoughts instantly engendered by the event. They must not be in the nature of a narrative of the fact after it has fully transpired, the fruit of memory, or possibly of fabrication after opportunity to deliberate. The subject has been many times discussed and the rule applied in Wisconsin. A few of the cases in this court and elsewhere suffice. Mack v. State, 48 Wis. 271, 4 N. W. 449; Hooker v. Railway, 76 Wis. 542, 547, 44 N. W. 1085; Hermes v. Railway, 80 Wis. 590, 592, 50 N. W. 584, 27 Am. St. Rep. 69; Reed v. Madison, 85 Wis. 667, 56 N. W. 182; Christianson v. Pioneer Co., 92 Wis. 649, 653, 66 N. W. 699; Bliss v. State (Wis.) 94 N. W. 325; Mullan v. Phil. & S. S. Co., 78 Pa. 25, 33, 21 Am. Rep. 2; Elkins v. McKean, 79 Pa. 493; Shafer v. Lacock, 168 Pa. 497, 32 Atl. 44, 29 L. R. A. 254; L. & N. Ry. v. Foley, 94 Ky. 220, 228, 21 S. W. 866; I. & G. N. Ry. v. Anderson, 82 Tex. 516, 519, 17 S. W. 1039, 27 Am. St. Rep. 902; Keyser v. Railway, 66 Mich. 390, 394, 33 N. W. 867; State v. Murphy, 16 R. I. 528, 17 Atl. 998; Commonwealth v. Hackett, 2 Allen, 136, 139; Senn v. Southern Ry., 108 Mo. 142, 18 S. W. 1007; Jack v. Insurance Co., 113 Fed. 49, 51 C. C. A. 36.

We cannot agree with the contention that the declaration offered was after or separated from the transaction or event under consideration; for it was made, according to the evidence, while the victim was being rescued and cared for, and in the full heat and excitement of the catastrophe. The event in hand was not alone the bursting of the vat, but included the admission of decedent to the place of peril, the sweeping down hill of the decedent, his struggles, and his rescue and care at the place of injury. There was not nearly so much termination of the transaction as in Bliss v. State, supra. It is also intimated by counsel in argument that the remarks were of the nature of an exclamation of remorse over the tragedy such as would spring naturally and spontaneously from a state of mind momentarily developed by the sight. While we cannot know the exact character of the declaration, it suffices that the words may have been such as to be clearly material and unpremeditated. Being spoken, however, in and as a part of a transaction which itself was relevant and material, the declaration was admissible, and its exclusion error, from which prejudice must be presumed unless the contrary clearly appear. Hermes v. Railway, supra. This conclusion does not rest on the fact that Dordel was defendant's employé or agent, but that he spoke as a participant in the events.

(b) Appellant also assigns error on the exclusion of testimony that one Miller, five days after the catastrophe, on request of one of plaintiff's attorneys, pointed out to him and to a photographer certain hoops as the hoops which had been around the exploded tank; it being claimed by appellant that Miller's act in so doing was within the scope of his authority as an employé of the defendant corporation. It appeared by the testimony of the secretary of the company that Miller "was chief engineer and superintendent of machinery and apparatus, sort of foreman over the mechanics, engineer, and laborers around the yard,—everybody except the experts. * * * The mechanical part of the plant, the machinery and apparatus, was under the supervision of Mr. Miller. He was at the head, but was not manager, of the business. * * * He was next in rank to the general officers, except the chemist. It was the business of Mr. Miller, and possibly of Mr. Wedring, to see that the hoops and staves and material generally from the bursted tank was cleared away and taken care of. His direction in that regard would be authorized by the company." Immediately after the accident, he gave direction that the hoops should be removed to a certain small yard, described as back of the carpenter shop, and that the staves be otherwise disposed of. Some months later he sold these hoops as old iron. The testimony excluded was that he, on request of plaintiff's attorney, pointed out these hoops, and said they were the same which came from the broken tank.

The rule of law is entirely well settled that, when an agent is vested with authority to perform any business for his principal, his words, his verbal acts, in conducting that business, and in relation thereto, are the acts of the principal, and may be proved as against the latter. Hazleton v. Bank, 32 Wis. 34, 48; Scott v. Insurance Co., 53 Wis. 238, 10 N. W. 387; Morse v. Railway, 6 Gray, 450; McGenness v. Adriatic Mills, 116 Mass. 177; Green v. Ophir, etc., Co., 45 Cal. 522; Austin v. Chittenden, 33 Vt. 553; Weeks v. Barron, 38 Vt. 420; Midland Lbr. Co. v. Kreeger, 52 Mo. App. 418; Ayres v. Hubbard, 71 Mich. 594, 40 N. W. 10; Richards v. Murphy, 1 Whart. 185; Baker v. Westmoreland Co., 157 Pa. 593, 27 Atl. 789; Halsey v. Lehigh V. R. Co., 45 N. J. Law, 26, 34; Murray v. Weber, 92 Iowa, 757, 60 N. W. 492; Cheney v. Beaty, 56 Ill. App. 90; Toll Bridge Co. v. Betsworth, 30 Conn. 380, 391; Xenia Bank v. Stewart, 114 U. S. 224, 228, 5 Sup. Ct. 845, 29 L. Ed. 101; 2 Jones, Ev. §§ 359, 360. This rule is

Digitized by Google

especially applicable to corporations, which can speak and act only through agents. Justice to the rights of others requires that acts of such intangible entities must be significant, and the basis for conduct by others, as in the case of individuals. When, therefore, a corporation selects an individual to do an act in its behalf, the individual, in doing that act, i. e., within the scope of his authority, is, in legal effect, the corporation doing it. This, too, whether he be one of the highest of general officers or a mere temporary employé. The evidence, quite without dispute, establishes that all contact of the corporation with these retired hoops was intrusted to Miller, as well as control of the place where they were. If the hoops were to be identified by the corporation, or to be exhibited to plaintiff's attorney or concealed from him, Miller was obviously the officer to do such act. No one else had any such authority, and no one else had any knowledge on the subject. Surely, exclusion of plaintiff from inspection of the hoops, or their suspicious destruction, if material against the company as suppression of evidence, would be provable by acts of Miller, and in such acts his words characterizing them would be alike admissible. There can be no distinction between such acts and the contrary one of permitting inspection. When plaintiff's attorney applied to Miller for identification and inspection of the hoops, he applied to the corporation. When Miller admitted the attorney to the premises, and led him to the spot, the corporation was responding to that application, and when Miller declared those the hoops desired the words characterized the act; they were integral to it, and as much emanated from the corporation as did the act of admission to its premises. We cannot avoid the conclusion that identification of these hoops by Miller was admissible as evidence against the defendant, and exclusion thereof was error.

(c) A further assignment of error is predicated on the rejection of certain photographs taken four or five days after the accident, claimed to exhibit the hoops which came from the broken vat, and which, if admissible, would have shown an advanced stage of decay and deterioration, and elucidated the photographer's verbal description of their condition. The court, in making the ruling, declared his view, as an original proposition, that the identification was sufficient, but felt himself constrained, by the decision of this court in the previous case, to hold the contrary. In this respect we think he was mistaken. A comparison of the evidence of identification contained in the printed case in the former action and that now before us shows a very marked difference, not only in the specific facts of which testimony was given, but also in respect to the clearness and definiteness of evidence to facts which were in some degree suggested in the former case. Thus, it was proved, substantially without dispute, that the hoops taken from the tank were placed at the spot where were the hoops photographed, and there was no pretense that they had been moved. There was evidence, disputed it is true, that no other hoops were at that particular place, although others were scattered about in the yard in the general vicinity. It was also undisputed that the hoops in question were covered with the grain or meal, which formed the solid part of the slops; that none of the other old hoops which had previously been thrown in the same general vicinity had any such grain or meal upon them. The defendant's engineer, Miller, testified that the hoops in the photograph looked like the hoops from the vat; also that the hoops from the vat were easily distinguishable from the old ones by the fresh slops clinging thereto and by the fresh appearance of the inside surface of the hoops, the rust thereon differing in appearance from that on hoops which had been longer exposed to the weather on both sides. With this evidence to identify the hoops which came from the vat, the witnesses who took the photographs testified that the hoops so photographed were noticeable by reason of fresh slops adhering thereto; that they were also distinguishable from other old iron by the peculiarity of the inner surface; and that there were no other hoops in the pile with those photographed which agreed substantially in quantity with those which came from the vat. This state of the evidence certainly presents a very strong case of identification, and was, as we have said, in many respects differentiated from that which was reviewed on the appeal in the former case; we think sufficiently so differentiated that the trial court might well have considered his judgment uncontrolled by our former decision.

The question of identification, as preliminary to the admissibility of the photographs, was, however, one for the court, and not primarily for the jury, and, so far as it was a question of fact, the conclusion of the trial court upon the evidence must be given great weight upon appeal—substantially the same weight as is given that court's findings upon other issues tried without a jury. All of the advantages of observation of witnesses, understanding of the application of testimony to known facts, and the like, are the same in one case as the other, and only where the appellate court can say that the identification is established by a very clear preponderance of the evidence should it overrule the conclusion of the trial court thereon. Such weight is accorded the decisions of trial courts generally upon the various questions of fact arising as preliminary to a ruling upon competency of witnesses or admissibility of particular evidence. Emery v. State, 101 Wis. 627, 78 N. W. 145; Nelson v. Insurance Co., 71 N. Y. 453, 461; Slocovich v. Insurance Co., 108 N. Y. 56, 62, 14 N. E. 802; Johnson v.

Digitized by Google

Arnwine, 42 N. J. Law, 451, 458, 36 Am. Rep. 527; Granniss v. Irvin, 39 Ga. 22; Gorgas v. Hertz, 150 Pa. 538, 24 Atl. 756; Maughan v. Burns' Est., 64 Vt. 316, 23 Atl. 583; Jones v. Tucker, 41 N. H. 546; Bain v. Walsh, 85 Me. 108, 26 Atl. 1001; Page v. Page, 15 Pick. 368, 374; Walker v. Curtis, 116 Mass. 98; Blair v. Pelham, 118 Mass. 420; 1 Greenl. Ev. (15th Ed.) § 425. In some jurisdictions it is intimated, indeed, that such decisions by trial courts will not be reviewed on appeal, but we are not prepared to carry the rule of conclusiveness further than we have suggested.

In view of the deference due to a deliberate conclusion by the trial court as to sufficiency of the identification, we might hesitate, even in the present case, to overrule such conclusion and hold it reversible error. Resolution of the doubt on that question is, however, not necessary, as reversal must result upon other grounds, and upon a new trial the positive identification by defendant's engineer may substantially vary the situation.

3. Respondent urges, as justification for the nonsuit, insufficiency of the notice of injury required by section 4222, Rev. St. 1898. That notice was signed, "Lindley Collins, Attorney for Claimant," described the accident, and declared that Hupfer was instantly killed, and that satisfaction is claimed by George Hupfer, administrator of the estate. It is contended that the notice must have been given by the beneficiaries, the widow and children, and must notify the defendant of a claim for their damages. The sufficiency of this notice is fully established by Parish v. Eden, 62 Wis. 272, 22 N. W. 399; McKeigue v. Janesville, 68 Wis. 50, 31 N. W. 298; Carpenter v. Rolling, 107 Wis. 559, 83 N. W. 953.

Judgment reversed, and cause remanded for a new trial.

BOHN v. CITY OF RACINE.

(Supreme Court of Wisconsin. Oct. 20, 1903.)

MUNICIPAL CORPORATIONS—DEFECTIVE SIDEWALKS — INJURIES TO PEDESTRIANS — CONTRIBUTORY NEGLIGENCE — VERDICTS — APPEAL.

1. An order denying a motion to set aside a verdict against defendant, in an action for injuries caused by an alleged defective sidewalk, founded on a finding by the jury that plaintiff was guilty of contributory negligence, will not be reversed on appeal unless the decision of the trial court was clearly wrong.

2. Where, in an action against a city for injuries caused by an alleged defective sidewalk, there was sufficient light at the time to have enabled plaintiff to have easily seen the defect if he had looked, and there was no evidence that his attention was diverted in any way, and plaintiff was quite well acquainted with the fact that work on the walk, which caused the defect, was going on at that point, an order of the trial court, refusing to set aside a verdict finding that plaintiff was guilty of contributory negligence, would not be reversed on appeal.

Appeal from Circuit Court, Racine County; E. B. Belden, Judge.

Action by Andrew Bohn against the city of Racine. From a judgment in favor of defendant, plaintiff appeals. Affirmed.

Action to recover for personal injuries claimed to have been caused by the insufficiency of a sidewalk in the defendant city upon the east side of Villa street between Fourteenth and Fifteenth streets, about 80 feet north of the latter. The defect claimed consisted of an abrupt drop in the surface of the walk of about 8 inches, created by the construction of a new cement walk, from Fifteenth street north to the point in question, higher than the surface from there on, which had been partly prepared for a continuance of the cement walk. It was alleged that such condition existed prior to the accident for about two weeks.

The right to recover on most of the material points was put in issue by the answer. There was evidence tending to establish all the issues in plaintiff's favor. On the issue as to plaintiff's contributory negligence there was evidence to the following effect: Plaintiff, when injured, was about 25 years of age. He had always resided a distance of about two blocks from the scene of the accident. It occurred between 8 and 9 o'clock p. m., July 27, 1902. He had been out walking for pleasure since about 7 o'clock, traveling during the time a little less than two miles. He traveled continuously after starting till the accident occurred except a momentary stop at a saloon. It was not very dark. As he walked south on the east side of Villa street where the surface had been prepared for putting in a cement walk, the old plank walk having been removed and the material lying about, when about 80 feet from Fifteenth street, he reached the north end of a new cement walk that had been constructed north from Fifteenth street. The surface of such new walk was about eight inches higher than the footpath upon which he approached. Not noticing that fact he collided with the end of the new walk, and was thereby caused to fall forward onto the hard surface thereof, with the consequences for which he claimed compensation. Villa street was a much-used thoroughfare. Sidewalks had existed on both sides thereof for many years. Plaintiff was very familiar therewith. Though he had not traveled on such street for some time, he knew that work of laying cement walks had been there in progress for a considerable period. It was his custom to pass within sight of the walk where he was injured every working day as he went to and from his business. On such occasions he often traveled on Fifteenth street, passing within about 80 feet of the scene of the accident. He saw the walk in question as he passed along one of the streets intersecting Villa street earlier in the evening of the day he was injured. There was an arc light at the intersection of Villa and Fifteenth streets located 16 or 18 feet from the ground, and

Digitized by Google

another at the intersection of Villa and Fourteenth streets. The bright surface of the cement walk, together with the lights from the crossings, made the walk quite prominent. There were trees on both sides of the walk, with foliage so near the surface as to cast shadows upon the walk and more or less intercept the rays of light from the crossing to the point where the accident occurred. There was no evidence tending to show that plaintiff could not have seen the raise in the walk had his attention been directed to the surface of the ground in front of him. There was no evidence that his attention was diverted in any way from the appearance of things in his pathway.

The jury found in favor of the defendant on the issue of plaintiff's contributory negligence, but found all others in plaintiff's favor. Plaintiff's counsel moved the court to change the unfavorable answer to one in favor of plaintiff, which was denied. Plaintiff's counsel moved further for judgment upon the verdict, which was denied. A further motion was made by plaintiff's counsel to set aside the verdict and grant a new trial, which was denied. Judgment was thereupon rendered for defendant, and plaintiff appealed.

Wallace Ingalls, for appellant. M. E. Walker, for respondent.

MARSHALL, J. (after stating the facts). To the trial court there was presented for determination a question as to whether there was evidence susceptible of a reasonable inference that appellant, on the occasion of his injury, was guilty of contributory negligence. That question was deliberately decided in the affirmative. The effect of this appeal is to challenge that decision as one not only wrong, but clearly so. Powell v. Ashland I. & S. Co., 98 Wis. 35, 73 N. W. 573; Nicoud v. Wagner, 106 Wis. 67, 72, 81 N. W. 999. As has often been said, in effect, if there is room for conflicting reasonable inferences on the record as it comes to us, as to whether there was or was not evidence tending to establish contributory negligence, a proper regard for the deliberate judgment of the circuit court should incline us to the view that it is right.

A study of the evidence in the light of the legal principle applicable thereto does not leave the mind free from reasonable doubts but that it is susceptible of conflicting reasonable inferences as to appellant's contributory fault. True, he had a right to assume, in the absence of knowledge to the contrary or any circumstance reasonably sufficient to put him on his guard, that the walk was reasonably safe; but, just as true, it was his duty to exercise ordinary care with his eyes as well as his feet, as he proceeded, and to observe those things affecting his personal safety which were open and obvious to ordinary attention to his surroundings. In many sidewalk cases that might be cited the plaintiff was held guilty of contributory negligence because when he was injured the defect could easily have been seen by him had he observed, as persons ordinarily do, his pathway as he proceeded, and there was no evidence that his attention was for the moment diverted. Robb v. Connellsville Borough, 137 Pa. 42, 20 Atl. 564; Shallcross v. Philadelphia, 187 Pa. 143, 40 Atl. 818. In a late work treating on this subject the law is stated thus:

"A traveler is not bound to give his whole attention to the highway over which he is passing, nor to keep his eyes constantly fixed upon the pavement or roadbed, watching for defects; nor need he look far ahead for defects or obstructions. Hence if, while his attention is momentarily diverted, he falls into an excavation or runs against an obstruction, the presence of which was not known to him, he is not necessarily, as a matter of law, guilty of contributory negligence, and that, too, even though such accident happens in broad daylight." Williams, Municipal Liability for Tort, § 128.

That is well supported by the authorities cited. It suggests, as will be seen, that in the circumstances stated the fact that the defect is easily observable by the ordinary use of the traveler's eyes as he proceeds is sufficient to carry the case to the jury on the issue of contributory negligence. That is because of the opportunity for reasonable controversy as to whether there was reasonable diversion of attention. When a defect in a walk is in plain sight of the traveler, and yet he is injured by it, that is sufficient to rebut the legal presumption in his favor of due care, and call upon him to show some reasonable excuse for not seeing the danger, substantially the same as if he knew of the defect. Crites v. New Richmond, 98 Wis. 55, 73 N. W. 322; Collins v. Janesville, 111 Wis. 348, 87 N. W. 241, 1087. Of course, he is not absolutely bound to see defects that are observable by looking, any more than he is bound to remember a defect of which he has knowledge. But he is called upon in both cases to show some reasonable diversion of attention at the instant of the injury, and that is rarely accomplished with such clearness as to take the issue in regard to the matter from the jury.

Applying the foregoing to the record before us, a decision is not difficult to reach. By the aid of the photographs it seems that the jury might reasonably have come to the conclusion that the defect in question was so prominent that appellant could readily have seen it had he been looking at or paying any attention to the walk in front of him. Respondent's attorney seems rather to concede that, in the absence of evidence showing that it was dark and that by reason of dense foliage on the shade trees at the sides of the walk, rays of light from the electric lamps at the crossings did not reach the place of the accident, the obstruction could

Digitized by Google

easily have been seen by appellant. But the evidence is by no means either conclusive that it was so dark that without artificial light the obstruction was not observable by ordinary attention, or that there was no artificial light effectual to dispel the darkness if that condition existed. The jury may well have come to the conclusion from the evidence that the accident happened soon after 8 o'clock. Appellant started out on his pleasure walk at 7 p. m. Traveling continuously except for a momentary stop at a saloon, he proceeded about two miles before the accident occurred. A person would go that distance at a very slow walk in an hour. On July 27, 1902, the sun did not set till about half past 7. So it will be seen that there is ground for believing that there was a sufficient degree of twilight when the accident occurred to enable appellant to easily see the end of the walk as he approached it, if he had been paying any attention to his pathway. But, assume that such was not the case,—there is considerable evidence that the street lights at the crossings made the end of the walk a conspicuous object, either by the rays of light reaching the point directly or being reflected thereto from surrounding objects. The pathway upon which appellant approached the cement walk was black. The surface of the cement walk was white. The contrast between the two surfaces was so great that the jury might very reasonably have come to the conclusion that there was sufficient light to render the end of the cement walk plainly visible. In addition to all this there is an entire absence of evidence that appellant's attention was diverted in any way, while there is much evidence that he knew quite well the fact that the work of putting down new cement walks on the street had been in progress for a long time, that a new walk had been partly laid between Fourteenth and Fifteenth streets commencing at Fifteenth street, upon which he was traveling, and that he must necessarily reach it before arriving at Fifteenth street. He had passed in plain view of the whole situation many times prior to the accident, the last time being on the day of the occurrence. In view of all we have detailed, it would seem that the trial court had good ground for holding that there was evidence in the case tending to prove that appellant heedlessly walked into the danger, and that his fault in so doing contributed proximately to the result for which compensation was sought.

It must be remembered that the issue of contributory negligence is peculiarly one for the jury; that is, that the cases are exceptional where it can be said as a matter of law either that the plaintiff was or was not guilty of contributory fault. There are a few exceptions where rules of law supply a certain test; but, generally speaking, the test is the judgment of the jury, from their conception of what ordinary care would require under the same or similar circumstances. So, it is generally difficult to determine whether, from any given state of facts, reasonable conflicting inferences of fact can or cannot be drawn. We are not prepared to say that the effect of the trial judge's decision in this case need be taken account of in coming to a conclusion that the judgment should be affirmed; but if we were to arrive at that point, certainly there is sufficient doubt as to the right of the matter that such decision should be deemed controlling.

The judgment is affirmed.

BARTON v. BRULEY.

(Supreme Court of Wisconsin. Oct. 20, 1903.)

ASSAULT—EVIDENCE—OTHER LIKE OFFENSES—CHARACTER FOR CHASTITY—WITNESSES—CONTRADICTION — IMMATERIAL ISSUE — INTEREST — TRIAL — CROSS-EXAMINATION — MISCONDUCT OF ATTORNEY.

1. In an action for assault, evidence of contradictory statements by a witness out of court as to whether he was not married to plaintiff's daughter was inadmissible as impeaching evidence.

2. Such evidence was hearsay, and inadmissible for the purpose of proving the fact of marriage to show witness' interest in the case.

3. Where, in an action for assault on a female, the court permitted evidence attacking her character on the subject of morality and chastity, both by proof of reputation and by specific acts of unchastity and lewd conduct, evidence that on certain occasions plaintiff had purchased beer was properly excluded as too remote.

4. Where, in an action for assault on a female, plaintiff's counsel was permitted, over objection, to ask defendant on cross-examination several questions as to his having made various similar assaults on other women in the past, and questions tending to show insults and indecent proposals made by the defendant to other women, which plaintiff's counsel did not expect defendant would admit, and which he had no expectation of being able to prove, such conduct was reversible error.

5. In an action for assault on a female, evidence concerning plaintiff's character and reputation for chastity was material as bearing not only on the probability of the assault being committed upon her, but also on the question of damages.

Appeal from Circuit Court, Clark County; James O'Neill, Judge.

Action by Emma J. Barton against E. Bruley. From a judgment in favor of plaintiff, defendant appeals. Reversed.

Action for damages for an assault. Plaintiff charged that on an occasion when she went to defendant's office to collect an order on him he seized her in his arms, kissed her, and solicited sexual intercourse, which was refused, and, after obtaining the money for which she went, departed. Defendant denied everything of the transaction except her coming to his office and collecting the money. There were no other witnesses of the transaction. Considerable testimony was intro-

¶ 5. See Assault and Battery, vol. 4, Cent. Dig. §§ 42, 47.

Digitized by Google

duced impeaching plaintiff's reputation both for morality and chastity and for veracity. The jury returned a verdict of $500 compensatory damages and $1,000 punitory damages, which latter element was cut down by the trial court to $100, and plaintiff required to remit the excess, which she did. From judgment for the remaining $600, defendant appeals.

Chas. F. Grow and J. R. & C. R. Sturdevant, for appellant. Dayton E. Cook, for respondent.

DODGE, J. (after stating the facts). 1. The first error is assigned upon the exclusion of certain evidence. A witness (H.), having testified for the plaintiff, was asked, both to affect his credibility and show interest, whether he was not married to the plaintiff's daughter, and on denial was asked whether he had not stated to one Cunningham that he was so married. Defendant offered to prove by Cunningham that H. did state to him that he was married to plaintiff's daughter, which was excluded. In this ruling there was no error. The testimony of Cunningham was not admissible as impeaching evidence purely, for it is never admissible to attempt to impeach a witness by showing contradictory statements out of court, having no relevancy to any of the issues in the case. 3 Jones, Ev. § 847; Kaine v. Trustees of Village of Omro, 49 Wis. 371, 373, 5 N. W. 838. This is on the principle that the jury are not at liberty to reject the evidence of a witness because he may have willfully sworn falsely, unless such willful false swearing were to some fact material to the issues on trial. Neither could the evidence be admissible to prove the fact of marriage, although that fact might have borne upon the witness' interest and impartiality. If the fact of marriage might be proved for that purpose—as, indeed, the court ruled it might—it must be proved by direct evidence, and not by mere hearsay, or admissions of those not parties to the action. Defendant could no more prove this fact by hearsay than any other.

2. Defendant made two offers by different witnesses to prove that on certain occasions plaintiff had purchased beer. The admissibility of such evidence is now asserted as tending to show bad character of plaintiff. The court allowed her character to be attacked upon the subject of morality and chastity, both by proof of reputation and by any specific acts of unchastity or lewd conduct, but ruled that the purchase of beer was too remote. In this respect we think the court was right. While, perhaps, it may be legitimately argued that women of loose morals and promiscuous habits with men are frequently addicted to the use of intoxicants, the converse is not necessarily true—that the purchase, or even the use, of intoxicating liquors, is proof of immorality in other directions. Such acts, to say the worst, are ambiguous, and the line of demarcation between them and quarrelsome habits, use of vituperative language, and many other acts even less suggestive, could not be logically drawn. No case is cited to us which authorizes the idea that a plaintiff may be assailed in court by proof of every fact derogating from the highest degree of modesty of demeanor or propriety. The inquiry at the most cannot extend beyond acts of lewdness which quite necessarily evince looseness in sexual morals. Ketchingman v. State, 6 Wis. 426, 431; Watry v. Ferber, 18 Wis. 500, 86 Am. Dec. 739; Gulerette v. McKinley, 27 Hun, 320.

3. The next error assigned is so closely associated with one of the grounds for the motion for new trial that the two can best be considered together. The defendant, upon cross-examination, was asked whether he had been divorced from his wife, which, being objected to, was withdrawn; but another question was put, so worded as to bring out the fact of a prior divorce. That was followed by the question: "Have you ever committed an assault of this kind before?" which being answered "No, sir," a motion was made to strike it out, and overruled by the court. Another question: "Did you, somewhere in the neighborhood of ten years ago, make an assault of the character of the assault here on —— on the streets of Neillsville?" Objected to for the reason, stated by the court, that "ten years ago is very remote." Again: "Q. Did you, some few years ago, while you were not living with your wife, make an indecent assault upon a Mrs. —— in your own store, and keep her in your back room all night?" Answered, "No, sir;" the court declining to rule. Again: "Q. Can you explain the reason why that night after night, after dark, during the time you were there in Cadott, and immediately preceding the time of this alleged assault, you were seen coming from your office after dark on one road and a woman coming down another road from the direction of your office at the same time." An objection was sustained because not cross-examination, and because the defendant's character was not in issue. Again: "Q. As a matter of fact, it has been your practice, has it not, Mr. Bruley, for the past three or four years, to insult and make indecent proposals to every woman where an opportunity was presented? Is that not a fact?" Objection overruled. Answered, "No." "Q. How many times have the police force of the city been called down to your house here in the last two years to protect your family against your assault?" to which objection was sustained. Nothing is better settled than that the commission of one assault cannot be established by commission of others, and that in a civil action for an assault such as this the defendant's character is in no wise in issue. Fossdahl v. State, 89 Wis. 482, 62 N. W. 185; Paulson v. State (Wis.) 94 N. W. 771, 774; 1 Jones, Ev. § 147. On the other hand, no irrelevant fact is more likely to have

Digitized by Google

weight with the ordinary jury than that the accused has done similar acts on other occasions. See Paulson v. State, supra. Now, upon the trial under consideration, obviously this rule of law was ignored twice by the court in specific overruling of objections to such questions. This error must reverse, unless we can say with reasonable certainty that it could not have worked prejudice. Were there a single question, although bordering on this forbidden territory, which might have been asked in good faith, and as to which the court might merely have made a mistaken ruling, we might think that the negative answer of the witness was enough to exclude the probability of prejudice; but the conduct here of the plaintiff's attorney was such as to exclude any palliation of this error of the court, or to permit us to do otherwise than condemn most distinctly that conduct. Here question after question was put by that attorney, which, of course, he knew, if answered at all, would be answered in the negative, and some of which were so vague and indefinite as to make certain that he had no expectation of proving any such fact, even he might have hoped that the trial court would permit him to attempt it. But one inference is warranted by such conduct, and that is that the plaintiff's attorney was seeking to insidiously propagate in the minds of the jury a belief that such facts did exist, and might be proved, but for technical legal objections, and to gain benefit from the suspicion and the antagonism toward the defendant likely to arise from a belief that he was a habitual debaucher of women. Such conduct is not worthy of members of a profession devoted by their oaths, if by no other restriction, to aiding courts in promotion of justice. It never should pass without condemnation and disapproval, though not always is its effect so obvious as to make necessary reversals of judgment. Similar conduct has been characterized by this court in uncertain terms in Buel v. State, 104 Wis. 135, 80 N. W. 78; McNamara v. McNamara, 108 Wis. 613, 84 N. W. 901; Goodman v. State, 114 Wis. 318, 323, 90 N. W. . Under the rule of such cases, we cannot sustain a judgment founded upon a verdict which may well have resulted from such conduct of counsel and erroneous rulings of the trial court as here described.

. Error is assigned upon certain instructions which substantially informed the jury that plaintiff's character and reputation for chastity were material as bearing upon the probability of the assault being committed upon her. It is not contended that there is error in what was said, but that the basis of the materiality of such evidence in one point impliedly excluded its relevancy in any other; and it is now urged that it was also material as bearing upon the question of damages. This contention is undoubtedly well founded. B—— v. I——, 37 Wis. 372, 94 Am. Dec. 604; Plummer v. Johnsen, 70 Wis. 131, 35 N. W. 334; Candrian v. Miller, 98 Wis. 164, 73 N. W. 1004. We shall not, however, deem it necessary to decide whether the omission of this further idea, in absence of any request by appellant's attorney to challenge the court's attention thereto at a time when it might have been corrected, would of itself work a reversal, since that result follows from other grounds. We agree with counsel for appellant that an omission did occur, which doubtless will not be the case upon another trial. It is, however, due to the trial court that counsel should promptly make known any desire for further amplification upon any subject. Indeed, it has been said that his failure to do so will be construed into such a waiver that he cannot upon appeal be heard to assign error.

5. Error is assigned for the failure of the court to set aside the verdict for want of evidence to support it, amongst other things. This we cannot sustain. The plaintiff and defendant were squarely antagonized to each other as to the principal event, and while other circumstances as well as impeaching evidence might well have warranted the jury in discrediting, in whole or in part, plaintiff's testimony, still that was distinctly a question within the jury's province, and we cannot say that discretion was abused by the trial court in refusing to set aside their conclusion thereon. The court should, however, upon the motion to set aside the verdict, have considered the misconduct of plaintiff's attorney in cross-examination of the defendant hereinabove referred to, and on that ground have awarded a new trial. That conduct went not only to questions of damage, wherein it might well have been inflammatory, but also to vilification of the defendant, and must have aided to discredit his testimony before the jury.

Judgment reversed, and cause remanded for a new trial.

RINGENOLDUS v. ABRESCH et al.

(Supreme Court of Wisconsin. Oct. 20, 1903.)

ASSIGNMENT FOR BENEFIT OF CREDITORS—ASSIGNEE'S BOND—ACTION—DISCHARGE OF ASSIGNEE — REDELIVERY OF PROPERTY — MANAGEMENT OF ESTATE—DEBTS—RELEASE OF SURETIES.

1. Rev. St. 1898, § 986, requiring plaintiff in an action against any officer and the sureties on his bond to file security for costs, does not apply to an action on a bond given by an assignee for benefit of creditors.

2. The statutes requiring the filing of claims against insolvents do not relate to a claim for an indebtedness incurred by an assignee on behalf of the estate after the assignment to him for the benefit of creditors.

3. Where an assignee for creditors has filed his petition showing that all creditors who had filed claims had filed releases, and secured an order of court discharging him on condition that the assignor pay all costs and expenses, and the assignee redelivered the property without his having paid a debt incurred by him in his management of the property, an action to re-

cover for such debt on his bond was not a collateral attack on the order of discharge, and was maintainable.

4. The action, being for damages for violation of the order, was properly brought, and the remedy was not by an application under Rev. St. 1898, § 2832, authorizing the court or judge to "relieve a party from an order" made through mistake or inadvertence.

5. Where an order discharged an assignee for creditors, and authorized him to redeliver the property to the assignor on his paying costs and expenses, and the assignee redelivered the property without paying, or having the assignor pay, a debt incurred in the management of the estate, the order did not discharge the assignee from liability on his bond.

6. The creditor, by filing his claims in bankruptcy proceedings afterwards brought by the assignor, did not lose his right to proceed therefor against the assignee and the sureties on his bond.

7. The action being for a violation of the conditional order for redelivery, it was immaterial that the sureties on the assignee's bond might not be liable for debts incurred in management of the estate.

8. Rev. St. 1898, § 1700, makes the expense of executing an assignment for creditors a preferred charge on the assigned property. Section 1701 provides, on certain conditions, for a redelivery of the property to the assignor, on proof of payment of claims and of costs and expenses. *Held*, that section 1701 was not alone for the protection of the assignee, but also protected those who dealt with him; and where he redelivered the property without obeying the condition of the order requiring the assignor to pay costs and expenses, creditors who had dealt with the assignee might bring an action on his bond.

9. Where plaintiff, who sold goods on credit to the assignee of an insolvent, who was managing the estate, on being notified that the assignee had released the trust property to the assignor, accepted in lieu thereof an indemnity bond of the assignor, he thereby assented to the release of the property.

10. The assent to the release of the property without the consent of the sureties on the bond of the assignee operated to release them for liability for the claim.

Appeal from Circuit Court, Milwaukee County; Warren D. Tarrant, Judge.

Action by Gabe Ringenoldus against Charles Abresch and others. From an order overruling a demurrer to the complaint, defendants appeal. Reversed.

Action on an assignee's bond, in the name of the clerk of the circuit court for Milwaukee county, for the benefit of the creditors of the assignee and the assignor. May 10, 1897, George Schweickhart made an assignment of his property in due form for the benefit of his creditors to Paul C. Biersach. The bondsmen of the assignee were Charles O. Manegold and Charles Abresch. There was an informality in the bond in that it ran to the state of Wisconsin as obligee instead of the clerk of the circuit court for Milwaukee county. The property that came to the hands of the assignee was of the value of about $35,000 and included a factory for putting up various kinds of mineral and carbonated waters. The court having supervision of the execution of the trust authorized the assignee to continue operating the factory, which he did, and in so doing incurred an indebtedness to C. F. Leng of $1,563.23 for bottles between May 10 and October 1, 1897. $812.05 thereof remains unpaid. The assignee made a profit, by continuing the business, of $2,135.67. October 2, 1897, the time having expired for creditors to file claims, upon the petition of the assignee, assented to by the assignor, showing that all creditors who had filed claims had filed releases of the same in the office of the clerk of the circuit court for Milwaukee county, an order was entered discharging the assignee and requiring him to deliver all property in his hands as such assignee to the assignor on condition of the latter paying the fees and expenses and costs of court. Thereupon the trust property was delivered to the assignor without his first paying the indebtedness to Leng, who was not informed of the transfer till December 28, 1898, when the information in that regard came to him accompanied by an assurance from the assignee that the assignor had assumed and agreed to pay such indebtedness and given a bond to indemnify the former against liability on account of his having parted with the trust property in advance of payment being made. January 10, 1900, Schweickhart filed his petition in bankruptcy in the United States court for the Eastern district of Wisconsin, and such proceedings were subsequently taken in that regard that Leng filed in such court a claim for the aforesaid indebtedness against the bankrupt, and received thereon a dividend of $12.50; that being the full amount recoverable in such proceedings. The only recourse of Leng and others to whom Biersach became indebted as assignee and failed to pay or require the assignor to pay before returning the assigned estate to him, is upon the assignee's bond.

All the aforesaid facts were set forth in the complaint as a cause of action, which Leng was entitled to prosecute in the name of the proper obligee in the assignee's bond against the obligors. The prayer for relief, among other things, was for the substitution of the clerk of the circuit court for Milwaukee county as obligee in the bond in place of the state of Wisconsin. Defendant Abresch demurred to the complaint for insufficiency and the demurrer was overruled. He appealed from the order accordingly entered.

Louis G. Bohmrich, for appellants. E. J. Henning (Kanneberg & Cochems, of counsel), for respondent.

MARSHALL, J. (after stating the facts). The major part of appellant's propositions to support the claim that the court erred in overruling the demurrer do not seem to call for extended discussion. We will refer to them briefly.

It is said that the complaint fails to show performance of the condition precedent created by section 986, Rev. St. 1898. That regulates procedure in the enforcement of official bonds, not such as the one involved here.

Digitized by Google

It is further said that the complaint fails to show that plaintiff complied with the statutes in regard to the filing of claims by creditors of insolvents. This was not such a claim. The indebtedness accrued after the assignment, by contract with the assignee.

The next suggestion is that the complaint shows that the assignee was by order of the court discharged from all obligations as assignee to the creditors of the assignor, for any money or property that came to his hands, and that the order cannot be collaterally attacked. We perceive no attempt to attack the order collaterally or otherwise. This suit is not to enforce the rights of a creditor of the assignor, but those of a creditor of the assignee having a right to a lien upon the assigned property, which the assignee, in breach of his duty and of his bond, has rendered valueless. The court expressly preserved that right, in that it ordered that the expenses of executing the trust should be paid by the assignor as a condition precedent to the trust property being restored to him.

The next point made is that Leng's remedy was under section 2832, Rev. St. 1898, for relief from the order. The answer to that is that he does not seek or want relief from the order. What he seeks is to recover his damages for a violation of the order.

Then it is suggested that the order discharged the principal and that such circumstance, upon familiar principles, discharged the surety. The trouble with that is that the principal was not discharged unconditionally. He was required to retain possession of the property till payment by the assignor of the expenses of executing the trust. That he failed to do, and it is for such failure, as indicated, that Leng complains.

Further, it is said that by Leng's filing his claim in the bankruptcy proceedings instituted by Schweickhart, he elected to rely upon the latter's liability, and so discharge the assignor. The rule invoked, it will readily be seen, has no application, since the enforcement of the claim against Schweickhart, as regards his personal liability, was perfectly consistent with holding the assignee likewise bound. Upon the facts alleged there was the situation, often met with, of a contract made by one person with another for the benefit of a third person, the latter being a creditor of the former and the benefit to flow to such third person being satisfaction of the first person's indebtedness to him. The beneficiary in such circumstances can assent to and sue on the contract made for his use without prejudice to the contractual liability of the original debtor till the actual discharge of the debt. Stites v. Thompson, 98 Wis. 329, 331, 73 N. W. 774; Kuhl v. C. & N. W. R. Co., 101 Wis. 42, 57, 77 N. W. 155.

It is further suggested that it is a question for consideration whether the sureties in any event would be bound by contracts of the assignee in carrying on the assigned business, though done by order of the court. No such question is necessarily involved here. This suit is not grounded on the idea that the sureties became liable to Leng because the assignee incurred the indebtedness to him in operating the assigned business; but on the idea, as before iterated and reiterated, that the assignee failed to pay the expenses of administering the trust, part thereof being the claim of Leng, or to see that the assignor did so as ordered by the court before releasing the trust property, which Leng had a right to rely upon for his pay, and thus breached his bond.

Another point made is that the condition of the bond is that the assignee will pay over to the creditors of the assignor, existing at the time of the assignment, "all moneys," etc., and "abide the order of said court," and that respondent was not such a creditor. In that counsel seems to easily ignore the condition of the bond last stated, i. e., that the assignee will abide by the order of the court. It is the breach of that upon which this action is founded.

But it is said that failure of the assignee to insist upon the assignor's paying the expenses of executing the trust before turning over the trust property, is not an actionable breach of the bond, since the provision of the order in that regard was for the sole benefit of the assignee, and he could therefore waive it if he saw fit. Not so. Section 1700, Rev. St. 1898, made the expenses of executing the assignment a charge upon the assigned property to be paid before the claims of creditors, while section 1701 provides for a return of the assigned property, in the circumstances of this case, only upon proof being filed of the payment of all proved claims, and payment by the assignor of the expenses of executing the trust. The latter section was evidently intended as much for the protection of persons entitled to liens upon the trust fund by reason of dealing with the assignee, as for the latter's protection.

The foregoing covers all the points raised by appellant's counsel except one. The manifest reason for treating them so briefly is because they seem obviously untenable. The remaining point appears to be fatal to the complaint. It is this: It appears upon the face of the pleading that Leng, without permission of the sureties, consented to the delivery of the trust property to the assignor upon his giving an indemnity bond to pay the former's claim. There is no principle better settled than that when there is a surety for the payment of the claim of another, and a property or a fund in the hands of the principal to which such other has a legal right to resort to collect such claim, if he consents to the release of such property or fund without permission of the surety, the latter is ipso facto discharged. Brandt on Sur. & Guar., 426, 429, 434. That

Digitized by Google

is within the general rule that one secured of his claim against another by a surety owes to the latter a duty not to deal with his debtor to the prejudice of the surety. Gardner v. Van Norstrand, 13 Wis. 543; Omaha Nat. Bank v. Johnson, 111 Wis. 372, 87 N. W. 237; 24 Am. & Eng. Ency. Law (1st Ed.) 851, 856. The complaint shows that Leng was notified December 28, 1898, that the assignee had released the trust property to the assignor and accepted in lieu thereof, to secure payment of his claim, an indemnity bond of such assignor. The inference from such circumstances that the release was assented to, seems clear beyond reasonable controversy. No effort was made by Leng in the assignment proceedings to obtain payment of his claim after receiving notice that an indemnity bond had been given for his benefit. The assignor's liability rested wholly on his agreement with the assignee, in consideration of which he received the trust property. The enforcement of that agreement by Leng necessarily made him a party to it. Consistent with that he made no claim whatever against the assignee's bondsmen till nearly four years after the trust property was delivered to the assignor, and until after he became satisfied that he could not collect his claim out of Schweickhart and his sureties. It hardly goes far enough in favor of appellant to say that such facts show clearly implied assent to the release of the trust property and to the substitution of the promise of Schweickhart and his sureties in lieu thereof. They evince an express assent thereto, rendering obviously applicable the rule of law above stated. It follows that the demurrer to the complaint should have been sustained.

The order appealed from is reversed and the cause remanded with directions to sustain the demurrer.

HANLEY v. KRAFTCZYK.

(Supreme Court of Wisconsin. Oct. 20, 1903.)

WILLS — PROBATE — LIMITATIONS — PARTY IN INTEREST — ESTOPPEL — APPEAL—DISMISSAL—ERRONEOUS DESCRIPTION — SUFFICIENCY OF EVIDENCE.

1. Failure of the court to act on a petition for probate of a will does not bar subsequent proceedings for probate.

2. Lapse of time is no bar to proceedings for probate of a will to establish title to real estate.

3. A purchaser of land from the devisee is entitled to have the will probated.

4. One who receives a deed of land from the devisee and her husband is not estopped to claim under the will and the conveyance from her because the husband had obtained a tax deed on the land.

5. It is not error for the circuit court to deny a motion to dismiss appeal from the county court made on the ground that the appeal was not taken in due time or according to the statutes, it appearing merely that the records and papers were not transmitted by the judge to the circuit court within the time after appeal prescribed by Rev. St. 1898, § 4033, but they having been filed there before the motion was made, and section 2831 authorizing their transmission after the time limited, in the discretion of the court, and for good cause.

6. A devise of land described as in section 21, and having certain boundaries, will pass land of testator in section 22, having such boundaries, there being no land with such description in section 21, and he having owned no land in that section.

7. Evidence in a proceeding for probate of a will held sufficient to sustain findings that the will was duly executed, and that testator was of sound mind and free from undue influence.

Appeal from Superior Court, Milwaukee County; J. C. Ludwig, Judge.

Joseph Kraftczyk petitioned for probate of a will, and from the judgment of the superior court reversing the judgment of the county court refusing to admit it to probate Michael Hanley appeals. Affirmed.

This is an appeal from the judgment of the superior court of Milwaukee county reversing a judgment of the county court refusing to admit the will of James Hanley to probate, and remitting the cause to the county court, with directions to admit the will to probate. It appears from the record, and is undisputed, or found by the court, in effect that the testator executed his last will and testament September 12, 1872, wherein and whereby he bequeathed to his son $100 and to his daughter $50, and devised certain real estate, therein described, to his wife, Johanna, and named her therein as executrix of his will; that the testator died September 13, 1872; that November 30, 1872, the widow, Johanna, presented to the county court her verified petition, praying that such will be proved and admitted to probate; February 19, 1874, Johanna married Cyrus J. Dodge; November 9, 1881, Cyrus J. Dodge got a tax deed on the land so devised to Johanna; October 31, 1882, Cyrus J. Dodge and his wife, the said Johanna, conveyed the land so devised, by warranty deed, with full covenants, to the defendant in this action; January 18, 1899, the defendant in this action presented to the county court his petition stating the facts mentioned, and others, and praying that the will be proved and admitted to probate; that thereupon the plaintiff, claiming under the heirs at law, filed objections to such probate; October 4, 1899, and after proofs and hearing, the county court held that the defendant was estopped from claiming title under the will, and that the defendant had no interest in the estate of the testator which enabled him to apply for probate, and ordered and adjudged that such application be denied; and thereupon the defendant appealed therefrom to the circuit court.

April 21, 1900, the plaintiff moved the court to dismiss such appeal, which motion was denied by the circuit court, Judge Johnson presiding. The case was thereupon tried in that court before Judge Johnson, who on April 25, 1900, reversed such judgment of the county court, but Judge Johnson died before the entry of judgment. Thereupon the venue

Digitized by Google

was changed by stipulation to the superior court, and the cause was re-tried in that court, and after such trial, and on July 9, 1901, that court made and filed findings of fact and conclusions of law, wherein it was found, as matters of fact, in addition to those stated, in effect, (4) that the will was duly executed; (5) that at the time of its execution the testator was of sufficient mental capacity to make a will; that no undue influence was exercised by any person upon him to procure its execution; (7, 8, and 9) that through mistake the premises devised were described as being in section 21 instead of section 22, which was the only section in which the testator owned any land; and that in that section he owned land which otherwise answered the description of the land devised, and upon which land the testator and his wife, Johanna, had their homestead at the time of the testator's death; and that Johanna continued to reside thereon until October 31, 1882, when she and her husband conveyed the same to this defendant, who thereupon entered into the possession of the premises so devised, and has continually occupied the same ever since, except portions thereof, which he has sold to other parties.

And as conclusions of law the court found that upon the death of the testator all his right, title, and interest in such premises vested in Johanna by virtue of the will; that the same passed from her to the defendant by virtue of the deed from her and her husband to him, mentioned, and that the defendant thereby acquired such interest in the premises as to enable him to apply for the probate of the will; that such application should be granted, and the will should be admitted to probate; and it was therein ordered that the judgment of the county denying the defendant's application for the probate of the will be, and the same was thereby, reversed; and it was further ordered that said will be admitted to probate, and that the matter be remitted to the county court, with directions to admit the will to probate. From the judgment entered accordingly, the plaintiff brings this appeal.

Chas. H. Phillips and Doerfler, McElroy & Eschweiler, for appellant. La Boule & Hunt, for respondent.

CASSODAY, C. J. (after stating the facts). Numerous technical objections are raised to the proceedings. The testator died September 13, 1872, leaving a will in which he devised his homestead to his widow, Johanna. On the same day Johanna filed the will in the county court. Two and a half months afterwards she petitioned the county court to have the will proved and admitted to probate. At the time the testator died he and his wife, Johanna, were living upon the premises so devised; and she continued to live thereon, for a time as a widow, and subsequently with her second husband, until October 31, 1882, when she joined with her husband in conveying the same by warranty deed with full covenants to the defendant, and ever since that time the defendant has been in such possession.

1. It is claimed that the defendant has no interest in the proceedings nor standing in court. A will is a muniment of title, but in this state, and some others, in order to "be effectual to pass either real or personal estate," it must be "duly proved and allowed in the county court." Section 2294, Rev. St. 1898. When so admitted to probate, it relates back to the time of the death of the testator, and is to be treated as speaking from that moment. Flood v. Kerwin, 113 Wis. 680, 89 N. W. 845, and cases there cited. There is no ground for claiming that the failure of the county court to act upon the petition of the widow, filed November 30, 1872, is a bar to the action taken in 1899. "A will devising lands may be admitted to probate at any time after the death of the testator." Haddock v. Boston & Maine R. R., 146 Mass. 155, 160, 15 N. E. 495, 4 Am. St. Rep. 295. In that case the will was not admitted to probate until more than 60 years after the death of the testator. That case followed a former case, wherein it was said that, "if a will can be found, it may be proved in the probate office at any time, in order to establish a title to real estate." Shumway v. Halbrook, 1 Pick. 114, 117, 11 Am. Dec. 153. So it has been held in that state that "whoever has a right to offer a will in evidence, or to make title under it, may insist on having it proved." Stebbins v. Lathrop, 4 Pick. 33, 42. The defendant, claiming title by deed from the devisee named in the will and her husband, certainly had a right to insist on having the will admitted to probate. The fact that such husband had obtained a tax deed on the land did not estop the defendant from claiming title under the will and the conveyance from the devisee. The claim that the defendant is barred from insisting upon the probate of the will by reason of the statutes of limitation is without foundation.

2. Error is assigned because the court refused to dismiss the appeal from the order and judgment of the county court denying the defendant's application for the probate of the will. The statutes gave the defendant 60 days within which to appeal from such order and judgment. Sections 4031–4033, Rev. St. 1898. It is conceded that the requisite notice was given, and the requisite undertaking was filed, and the order of the county court allowing the appeal was made within the time thus prescribed, and on or before December 1, 1899. The only objection is that the appeal papers and record were not filed in the circuit court until March 1, 1900. The last section of the statute cited required the county judge within 20 days after the appeal was taken to "file in the circuit court a certified copy of the record and proceedings appealed

Digitized by Google

from, together with the notice of appeal and undertaking, and proof of service of the notice of appeal on the adverse party, according to the order of the county court." Section 4033, Rev. St. 1898. Should the appeal have been dismissed merely because the records and papers were not transmitted to the circuit court within the time required by that section? That court certainly had jurisdiction of the case by virtue of the appeal taken. Congregation of Immaculate Con. of Barton v. Hellstern, 105 Wis. 632, 81 N. W. 988. The statute expressly authorized that court, in its discretion, and for good cause shown, and upon such terms as might be just, to allow such records and papers to be so transmitted to the circuit court "after the time limited" therefor had expired. Section 2831, Rev. St. 1898. Motions are frequently made in this court to dismiss appeals on the ground that the records and papers have not been transmitted to this court within the time required. But such motions have generally been denied whenever the records and papers are here at the time of hearing the motion. In the case at bar the motion to dismiss the appeal was not made until a month after the records and papers had been filed in the circuit court. Besides, that motion was not made on the ground of such failure to so transmit the records and papers within the time required by statute, but solely on the ground that the appeal "was not taken in due time or according to the provisions of the statutes." The facts stated show that the ground upon which the motion was so based was without foundation. We find no error in refusing to dismiss the appeal.

3. Error is assigned because evidence was admitted to prove that by mistake the lands described in the will were in fact located in section 22 instead of section 21, as stated in the will. The description in the will of the lands so devised to the wife is as follows: "A part of the southwest quarter bounded northeast by the railroad of the Milwaukee & St. Paul Co., west by Hapman and Harwood, being in section 21, town 7, range 21, containing 8 acres of land, being situated in the county of Milwaukee and state of Wisconsin." The evidence showed, and the court found, in effect, that there were no lands so bounded in section 21, but that there were lands so bounded in section 22, and that the same were owned and occupied by the testator as his homestead at the time of his death; that the testator never owned or occupied any lands in section 21; and that there were no lands in that section which were bounded on the northeast by the railroad of the Milwaukee & St. Paul Company, and on the west by lands owned by Hapman and Harwood. Of course, it is incompetent for a court to reform a will by changing its language or adding provisions not written therein, or to prove by extrinsic evidence some supposed intention not expressed in the will, nor fairly implied therefrom, when construed in the light of all surrounding circumstances. Sherwood v. Sherwood, 45 Wis. 357, 30 Am. Rep. 757; O'Hearn v. O'Hearn, 114 Wis. 432, 90 N. W. 450, 58 L. R. A. 105, and cases there cited. But where there is a latent ambiguity in the language of the will, or the will contains inconsistent provisions, extrinsic evidence is admissible to enable the court to ascertain and give effect to the intention of the testator as expressed in the will, when read in the light of all the surrounding circumstances as they existed at the time the will was executed. Morgan v. Burrows, 45 Wis. 211, 30 Am. Rep. 717; Sherwood v. Sherwood, 45 Wis. 357, 30 Am. Rep. 757; Scott v. Neeves, 77 Wis. 312, 45 N. W. 421; O'Hearn v. O'Hearn, supra. A will or "deed with a description otherwise uncertain should be construed with reference to the actual rightful state of the property at the time of its execution, and extrinsic evidence of that state is admissible to aid in the construction." Whitney v. Robinson, 53 Wis. 309, 10 N. W. 512; Docter v. Hellberg, 65 Wis. 421, 27 N. W. 176; Mills v. The C. & N. W. Ry. Co., 103 Wis. 199, 79 N. W. 245. Here the lands devised are described in the will as being bounded by three fixed and certain visible objects, to wit, the railroad, mentioned, on the northeast, and by Hapman and Harwood on the west. Such are the boundaries of the eight acres owned and occupied by the testator as a homestead at the time of his death. There were no lands answering such calls in section 21 at the time of the execution of the will, but there were such lands, then owned and occupied by the testator, answering such calls in section 22. The testator owned no lands in section 21, and the description in the will is so indefinite and uncertain as not to apply to any specific land in that section. Certainly the devise is not to be frustrated by the mere false statement that the lands are in section 21 instead of section 22. Kennedy v. Knight, 21 Wis. 340, 94 Am. Dec. 543; Du Pont v. Davis, 30 Wis. 170; Paine v. Benton, 32 Wis. 491; Sherwood v. Sherwood, 45 Wis. 364, 30 Am. Rep. 757; City of Madison v. Mayers, 97 Wis. 413, 414, 73 N. W. 43, 40 L. R. A. 635, 65 Am. St. Rep. 127. We must hold that the findings of the court as to the description of the lands devised are supported by competent evidence.

4. It is strenuously contended that the findings of the court to the effect that the will was duly executed, and that the testator was at the time of sound mind and free from undue influence, are contrary to the clear preponderance of the evidence. The will purports to have been executed 29 years before the trial. The man who drew it (Louis Hildebrand) was a justice of the peace when he drew the will, and was 80 years of age at the time of the trial. He testified to the effect that he knew the testator, and remembered having drawn a will at his house; that his recollection in respect to the will was pretty poor; that the will shown him was in his

Digitized by Google

handwriting, and that he signed as a subscribing witness; that he could not tell at whose request he drew the will; that he went to the house at the request of the testator's wife; that the testator was sick at the time and said nothing; that he drew the will, and then read it to the testator, and explained it to him, and that the testator approved of it by bowing his head; that in his opinion the testator knew the business transacted; that he did not remember exactly what took place, except as he remembered his practice; that the writing was correct in every respect: that the attestation clause was correct, and states the facts that took place there at that time; that his daughter and her intended husband were also subscribing witnesses to the will; that he got the contents of the will from the testator's wife; that the testator was sick, and said nothing, and was an habitual drunkard. If there was no other evidence as to the execution of the will except what was remembered and testified to by Mr. Hildebrand, then there would be much force in the claim that the facts bring the case within the ruling of this court in the Downing Will Case, 95 N. W. 876. There is, however, this difference, that in that case there was an absence of the requisite facts as to the execution of the will, whereas here there is an absence of the memory of such facts by the particular witness named, and yet he testified that the attestation clause correctly states the facts that took place there at the time the will was executed. If that is true, then the instrument "was signed, published, and declared by the said testator to be his last will and testament, in the presence of" the three subscribing witnesses who signed their names thereto "at his request, as witnesses in his presence, and in presence of each other." As recently held by this court, "the proper attestation of a will by witnesses raises a strong presumption of due execution, which can only be overcome by clear and convincing proof to the contrary." In re Gillmor's Will (Wis.) 94 N. W. 32, and cases there cited. But it is unnecessary to rest upon such presumptions. The subscribing witness, Mrs. Amelie Voss Hennichsen, testified to the effect that she went to the house of the testator with her father; that the testator told him that he was the one who wanted to make a will; that he said he had no objection to the three subscribing witnesses; that he wanted his wife to be his sole heir; that the will was drawn there in the presence of the testator; that the will was read to him before it was executed, and that the testator fully understood its contents; that in her opinion he was at the time of sound mind; that there was no influence used to induce him to make the will as he did, except, perhaps, her kindness to him; that, after the testator signed the will by making his mark, it was said in the presence of the testator that "we three should sign as witnesses, and we thereupon did sign our names thereto as subscribing witnesses in the presence of the testator, who was feeble, but perfectly conscious at the time." The other subscribing witness was 73 years of age, and had lost his eyesight, and had poor memory; but, so far as he remembered the transaction, he corroborated his wife. We must hold that the evidence is sufficient to sustain the findings of the court as to the due execution of the will, the mental capacity of the testator at the time of such execution, and that he was free from any undue influence at the time of such execution.

The judgment of the superior court for Milwaukee county is affirmed.

SMITH v. MILWAUKEE ELECTRIC RY. & LIGHT CO.

(Supreme Court of Wisconsin. Oct. 20, 1903.)

CARRIERS—INJURIES TO PASSENGERS—STREET RAILWAYS — DERAILMENT — QUESTION FOR JURY — EVIDENCE — JUDGMENTS—VACATION AT SAME TERM—JURISDICTION.

1. In an action for injuries to a passenger on a street car, evidence that the accident occurred at a curve in the track; that crushed rock had been permitted to remain on the rails; and that the motorman operated the car which was derailed at a speed of from 12 to 20 miles an hour, regardless of such conditions—was sufficient to justify a jury in finding that the derailment of the car was due to the motorman's negligence in running the same at too high a rate of speed, and to the negligence of the company in permitting crushed rock to remain on the rails as alleged in the complaint.

2. The right of a trial court to set aside a judgment during the term of its own motion is not limited to judgments inadvertently entered, but extends to a final judgment which was the result of a series of erroneous rulings entered after deliberation.

Appeal from Circuit Court, Racine County; E. B. Belden, Judge.

Action by Louisa Smith against the Milwaukee Electric Railway & Light Company. From an order setting aside a judgment on a nonsuit and granting plaintiff a new trial on the court's own motion, defendant appeals. Affirmed.

Action to recover for injuries received by plaintiff by the derailment of one of defendant's cars while she was a passenger thereon. The negligence complained of was running the car at a speed of 18 to 20 miles an hour contrary to the ordinance of the city regulating the movement of cars, where the track was in a defective condition in that foreign material had been allowed by defendant to accumulate thereon and on the right of way. It was alleged that, "The careless and negligent manner in which the car was run, namely, at its high and unlawful rate of speed, and the failure of the said company to maintain its equipment in a safe and prudent manner were the proximate causes of said plaintiff's injury."

The defendant answered admitting that its car was derailed at the time alleged in the complaint, and that plaintiff was a passenger

Digitized by Google

thereon, and alleged that the derailment was caused by the malicious and wanton obstruction of its track by persons not in its employ or in any manner connected with the defendant and for whose conduct it was in no sense answerable.

There was evidence proving or tending to prove that plaintiff was injured by the derailment of the car; that at the time thereof the car was going at a speed of from 12 to 20 miles an hour and faster than the ordinance of the city permitted; that a large amount of crushed stone had been deposited by defendant between, along and upon its tracks, and that there was a curve in the track where the car left the same. There was no other proof of how the accident was produced.

At the close of plaintiff's case a motion for nonsuit was granted. Subsequently plaintiff moved the court to vacate the nonsuit and for a new trial, which, after due deliberation, was denied. Judgment was rendered accordingly. Thereafter, before the close of the term, without notice to the parties or their attorneys, the judgment and the previous orders were vacated and a new trial granted. Defendant appealed.

Kearney, Thompson & Myers (Spooner & Rosecrantz, of counsel), for appellant. John W. Owen (Wallace Ingalls, of counsel), for respondent.

MARSHALL, J. (after stating the facts). The first proposition of appellant's counsel is stated by them thus: "The nonsuit was not erroneous, the plaintiff having alleged specific negligence as the cause of the accident, was bound to show such negligence, and that the accident was caused thereby. This she failed to do." From the argument of this branch of the case we gather the idea that counsel supposed that to warrant the jury in finding that the negligence complained of caused the derailment of the car they must have some direct evidence on the subject; that otherwise they would be left to conjecture merely. There is probably no principle better understood than that issuable facts can be established by indirect as well as by direct evidence. If the circumstances of the accident in this case, as the jury had a right from the evidence to believe them to be, were such as to raise a reasonable inference that the derailment of the car was caused by the way it was operated, combined with the faulty condition of the track alleged, then a fair jury question in regard to the matter was presented. Now, notwithstanding the argument of counsel and the evident uncertainty the trial judge labored under on the subject, it seems that the evidence tended strongly to prove the acts of negligence alleged, and that they caused the derailment of the car. Such evidence was to the effect that where the accident occurred there was a curve in the track; that there was crushed rock upon the rails, and that the motorman operated the car at a speed of from 12 to 20 miles per hour regardless of those conditions. One, it seems, has but to apply common understanding to such a situation—a jury must necessarily be allowed to do that—to see that the derailment of the car was probably caused by its being run too fast in view of the curve in the track and the presence upon the rails of crushed rock, and that the motorman in charge of the car might well have expected had he given any thought to the matter, that the car might go off the track as it did. It follows that the nonsuit was improperly granted, and that if the court had power to vacate it on its own motion, and grant a new trial, appellant has no good ground for complaint.

It is insisted that the rule that a court of record has control over its judgments and orders during the term in which they are rendered and may, with or without a motion therefor, vacate any such order or judgment if justice seems to require it, should not be extended to a judgment or order deliberately entered affirming a prior decision made during the term. If there is any such limitation upon the rule we are not familiar with it. Counsel has not produced any authority that there is. This court, in common with others, has declared in the broadest language that a court possesses inherent authority to set aside any judgment or order entered by it through mistake, inadvertence or want of proper deliberation at any time during the term, and need not wait to have such power put in motion by the request of an interested party before acting. Brown v. Brown, 53 Wis. 29, 9 N. W. 790; Hansen v. Fish, 27 Wis. 535. In the last case cited the court said: "There can be no doubt of the power of the court to set aside a judgment inadvertently ordered, at the same term at which the judgment was entered," and "that the court may exercise that power on its own motion." It would be a violent infraction of that to hold that if a judge erroneously enters an order through mistake, inadvertence or want of proper deliberation, and follows it by a second order affirming the first, thereby repeating the error through want of proper consideration of the subject, he is then powerless to correct the mistake, however apparent the same may be. The full scope of the rule was indicated in Brown v. Brown, where it was said that, in the interests of justice the judge should be allowed to vacate any order made by him through mistake, inadvertence or want of deliberation, at any time during the term in which the error is committed. Obviously, it can make no difference with the application of that principle that the mistake to be corrected is the final one in a series of erroneous rulings.

The order is affirmed.

Digitized by Google

STATE ex rel. WEBER v. BOARD OF TRUSTEES OF POLICEMEN'S PENSION FUND et al.

Supreme Court of Wisconsin. Oct. 20, 1903.)

MUNICIPAL CORPORATIONS — PENSION FUND FOR POLICEMEN—DISABLED OFFICERS—EXAMINATION BY MEDICAL EXAMINER—CONDITION PRECEDENT.

1. Under Laws 1899, p. 446, c. 265, § 8, declaring that if any member of the police department shall, while on duty, be injured, and found on "examination by a medical officer ordered by said board [the board of trustees of the pension fund for members of police departments in certain cities] to be physically or mentally disabled by reason of service in such department," so as to render necessary his retirement from service in such department, the board shall retire him, and order payment to him of a monthly pension, the examination and finding by the medical officer are conditions precedent to the retirement of the disabled member, though the permanent disability of the member is conceded.

Appeal from Superior Court, Milwaukee County; J. C. Ludwig, Judge.

Mandamus proceedings by the state, on the relation of Mathias Weber, against the Board of Trustees of the Policemen's Pension Fund and others. From an order refusing to quash the alternative writ, defendants appeal. Reversed.

This is an appeal from an order refusing to quash an alternative writ of mandamus. It appears from the relation, in effect: That the relator was a married man, 44 years of age. That he entered the service of the city of Milwaukee as a patrolman January 2, 1890, and continued in such employment until injured, May 27, 1901. His salary was $80 per month, out of which, after June, 1899, $2 per month was deducted and placed in the policemen's pension fund, pursuant to chapter 265, Laws 1899. He remained on the pay roll until May 1, 1902. May 27, 1901, at 3:42 p. m., he rang in his time, and reported "off duty" for the day, from a patrol box within his beat. The time for him to go off duty for the day was 6:45 p. m., but a leeway of five minutes either way was allowed by the department. Just after ringing up his time a street car passed him, going in the direction of his home, having a sign thereon, "No passengers," but was required by the ordinance granting the street railway its franchise to carry policemen in uniform free of charge. It was the custom of the operators of the car in question to "slow up" for policemen in uniform, but it is not claimed that the car in question "slowed up" for the relator. The relator was in uniform, and, for the purpose of getting home, attempted to board the moving car at the front platform. In doing so he tripped and fell, and his left leg was run over and crushed so as to necessitate amputation four inches above the ankle. This injury permanently disabled the relator, so as to render necessary his retirement from the service of the police department. June 17, 1902, the relator made application to the defendant board for a pension, under chapter 265, p. 443, Laws 1899, and filed his claim therefor on that day; and on January 12, 1903, the board denied the pension, making written findings of fact substantially as above set forth, and reciting that, on a motion to allow the pension, three of the board voted in the affirmative, and three in the negative—"three of the board were of the opinion that, as a matter of law, the petitioner was entitled to a pension as patrolman, under the law, and therefore voted to give him a pension, and three others were of the opinion that, as a matter of law, under the foregoing facts, the petitioner was not entitled to a pension, and voted against the granting of the pension for that reason, and therefore the petition of the petitioner for a pension was denied" by reason of such tie vote. The car which the relator so attempted to board traveled four blocks from the place of the accident before getting beyond the limits of the relator's beat, beyond which the relator had to ride about a mile and a half to get home, if he went as far as he could on the car. Various rules and ordinances are quoted in the relation, which are to the effect that a patrolman shall hold himself in readiness at all times to answer the calls and obey the orders of his superior officers. He must reside in the city, and must not leave it without permission, except on his vacation, and he must then leave his address. He must devote his whole time and attention to the business of the department, and may not engage in any other calling, and, "although certain hours are allotted to the respective members for the performance of duty on ordinary occasions, yet at all times, when notified, he must be prepared to act immediately." He shall not wear citizen's clothes without permission. He may serve criminal process, and civil process when the city is not a party, and possess the powers of a constable at common law. He is required to arrest all persons found violating any law or ordinance, or found under suspicious circumstances, and, if he neglects to perform any duty required of him, shall forfeit a penalty of not exceeding $100. Upon such relation the defendants moved the court to quash the alternative writ of mandamus issued February 3, 1903, and to dismiss the order to show cause therein made by the court on that day, and to dismiss the petition upon which the writ was issued, and all proceedings therein, with costs, upon the grounds (1) that it appeared upon the face of the petition that the court had no jurisdiction to grant the relief prayed for therein; (2) that the petition and the alternative writ of mandamus do not, and neither of them does, upon its face, state facts sufficient to entitle the relator to the peremptory writ of mandamus as prayed, or to any relief. Upon the hearing of such motion, the court, on April 4, 1903, ordered that such motion of the defendants to quash be, and

Digitized by Google

the same was thereby, overruled and denied, with leave to serve and file a return on payment of costs, etc. From the order so refusing to quash the alternative writ of mandamus, the defendants bring this appeal.

Hoyt, Doe, Umbreit & Olwell, for appellants. John Toohey, for respondent.

CASSODAY, C. J. The correctness of the decision of the trial court depends upon the construction to be given to the statute which declares that "if any member of the police department shall while engaged in the performance of his duty as such policeman be injured and found upon an examination by a medical officer ordered by said board to be physically or mentally permanently disabled by reason of service in such department so as to render necessary his retirement from service in such department, such board shall retire such disabled member from service: provided, no such retirement on account of disability shall occur unless the member has contracted said disability while in the active service of such department. Upon such retirement the board shall order payment to such retired member, monthly, from such pension fund a sum properly payable according to his grade, to wit: * * * patrolmen thirty-five dollars." Section 8, c. 265, p. 446, Laws 1899. A prior section of the act gave to the board "exclusive control and management of the fund mentioned," and required the board to "hear and decide all applications for relief or pensions under" the act, and declared that "the decision of such board on such applications shall be final and conclusive and not subject to review or reversal, except by the board." Section 4, Id. The last clause quoted was stricken out by section 2, c. 176, p. 223, Laws 1901, which went into effect a month prior to the time when the relator was injured. Those words being stricken out, it is urged that the action of the board in denying the relator's application was not "final and conclusive," but was "subject to review or reversal" by the courts. Conceding that to be true, still it is to be remembered that the board only had such powers as were expressly granted by the statute, or necessarily implied therefrom. Gilman v. City of Milwaukee, 61 Wis. 592, 21 N. W. 640, and cases there cited. While the act authorizes the "board of its own motion" to retire "any member of the police department" who has become 50 years of age, and "served 22 years or more in such department" (section 10, Id.), yet, as indicated by the language quoted, it expressly limits the powers of the board in granting such retirement for mere disability. In such cases the board is only authorized to "retire such disabled member from service" in case he was injured "while in the performance of his duty as such policeman," and after being "found upon an examination by a medical officer ordered by said board to be physically or mentally permanently disabled by reason of service in such department so as to render necessary his retirement from service in such department." Mere permanent disability while in such service is not enough to authorize such retirement, but, in addition, such medical officer must first find that such disability was "by reason of service in such department." There is no claim that the board ever ordered such examination by a medical officer, nor that such medical officer ever found as a fact, or otherwise, that the relator's disability was "by reason of service in such department." Such an examination and finding are made, by the express language of the act, conditions precedent to the retirement of such disabled member from service by any action of the board. The same section expressly prohibits such retirement "unless the member has contracted such disability while in the active service of such department." Such provisions of the statutes were express limitations upon the powers of the board, and hence could not be waived by the board. True, the permanent disability of the relator is conceded, but that did not give the board power to proceed in disregard of the mandates of the statutes. We must hold that the facts stated in the petition and the writ are insufficient to entitle the relator to a peremptory writ of mandamus.

The order of the superior court for Milwaukee county is reversed, and the cause is remanded, with direction to grant the motion of the defendants and quash the alternative writ of mandamus.

ORNSTEIN v. YAHR & LANGE DRUG CO.

(Supreme Court of Wisconsin. Oct. 20, 1903.)

MASTER AND SERVANT—ENTIRE CONTRACT OF EMPLOYMENT — CONSTRUCTION — EXPENSES INCURRED ON SUNDAY—BREACH OF CONTRACT — ACTIONS — ELECTION OF REMEDIES—EFFECT.

1. Where a contract of employment provided that plaintiff was to sell defendant's goods for a period beginning April 1 and ending December 31, 1900, at a salary of $1,000 per year and expenses, and that a failure on the part of either party to faithfully carry out his part of the contract should authorize a termination thereof by the other party giving 30 days' notice, it was entire, and not severable, so that the benefits and value of the services for a part of the period could not be apportioned pro rata.

2. The fact that sums paid thereon by the employer were the pro rata amount for the services rendered before payment did not render the contract severable; since such payments would be regarded as advancements on the price to be paid for the services to be rendered during the contract period.

3. Where a contract for the employment of a traveling salesman provided that he should receive his expenses in addition to his salary, but that the expenses should not exceed an average of $7 per working day, and the employé was required on several occasions to travel and work on Sunday, expenses incurred on such Sundays, actually made in the service, should be included in calculating the average expense per working day under the contract.

Digitized by Google

4. Where an entire contract for the employment of plaintiff as a traveling salesman for a specified time was wrongfully broken by defendant, plaintiff was entitled to elect to rescind the contract and sue on a quantum meruit for services actually rendered, or bring an action for alleged damages resulting from the breach, and hence an action to recover an amount equal to a month's pro rata salary under the contract, in which plaintiff recovered a judgment, which was paid by defendant, constituted an election of remedies, and precluded plaintiff from subsequently recovering other or further damages.

Appeal from Superior Court, Milwaukee County; John C. Ludwig, Judge.

Action by W. C. Ornstein against the Yahr & Lange Drug Company. From a judgment in favor of plaintiff, defendant appeals. Reversed.

Appellant engaged respondent as a traveling salesman for a period beginning April 1 and ending December 31, 1900. The agreement provides in part that he was "to act in the capacity of a cigar salesman for them, and sell their goods in the territory selected by them, in harmony with their wishes, and in keeping with their instructions from time to time as necessity may demand; for which services they agree to pay him a salary of one thousand ($1,000) dollars per year and expenses, the latter not to exceed an average of seven ($7) dollars per working day, with the distinct understanding that same shall be kept as much less than this amount as possible, and represent them properly. Furthermore, it is mutually agreed that a failure on the part of either party to faithfully carry out his part of the contract will be considered sufficient cause for the termination of this contract by giving 30 days' notice." Respondent worked from April 3d to June 29th. He reported Sunday among the number of his working days when he was actually engaged in working on that day, and included the expenses of that day as the expenses of a working day. It appears that appellant treated the expenses of Sunday as proper in arriving at the total amount of expenses, but insists Sunday should not be included as a "working day" in computing the average daily expenses, which were limited to "seven ($7) dollars per working day." Including Sunday, the expenses per working day for the whole period during which respondent was actually employed average less than $7; excluding it, the amount is more. On July 1st respondent was notified that his services were no longer desired, for the reason that he had breached the contract by exceeding the average daily expense specified therein. In August he brought an action in justice court, and recovered an amount equal to a month's pro rata salary. After the contract period had expired, this action was brought to recover damages for the breach of the contract in wrongfully dismissing him from service. Respondent alleged his damages were equal to the difference between the amount received and the total salary he was to receive for the period of service. Judgment was awarded for that amount, with costs, amounting to $464.15. From that judgment this appeal is taken.

Nath. Pereles & Sons, for appellant. W. B. Rubin, for respondent.

SIEBECKER, J. (after stating the facts). The terms of employment of respondent by appellant are embodied in a written contract specifying the nature of the service, the compensation to be paid therefor, and the amount to be allowed as expenses in rendering the services. The contract must be treated as embodying the agreements of the parties concerning the employment, and fixing the duties which devolve upon either party arising from this relationship. It is important at the outset to ascertain whether this agreement admits of being treated in law as an entire and indivisible one, or as one separable, divisible, and apportionable. This agreement contains the express promises whereby the appellants engaged respondent for the definite period beginning April 1, 1900, and ending December 31, 1900, to represent them and render the services of a traveling salesman in the territory to be selected by them under their instructions, and "for which services they agree to pay him the salary of one thousand ($1,000) dollars per year and expenses, the latter not to exceed an average of seven ($7) dollars per working day." The respondent agreed to accept such employment, and render service in the most advantageous and profitable manner. It is further stipulated that a failure by either party to fulfill this agreement shall be grounds for its termination upon 30 days' notice. The intent of the parties is manifest by the terms and condition of the agreement. A consideration thereof discloses the fact that the mutual obligations imposed were concurrent acts, requiring each party to perform his part, and that an entire fulfillment of the promise by either preceded the right to compel performance on the part of the other. The amount of the consideration to be paid by the appellant is certain and definite, and is dependent upon the performance of the services by respondent for the fixed period. The services for the period defined is the consideration of the promise to pay the salary. Under these circumstances the benefits and value of the services for a part of the period cannot, in legal contemplation, be apportioned on a pro rata basis. If either party desired such an apportionment, he should have insisted that the terms of the agreement expressly provide for it. It is argued that the terms of the contract as written should be held apportionable upon the ground that the sums paid thereon by appellants were the pro rata amount for the service rendered by

¶ 4. See Judgment, vol. 30, Cent. Dig. §§ 1106, 1109.

Digitized by Google

fore payment. This cannot control, since the terms of the agreement are plain and definite, and readily understood under rules applicable to the construction of such agreements. It has frequently been held that, if there is an express promise to pay a definite sum as compensation for a prescribed period of service, it is an entire promise made for the whole service of the contracted period; and, if installments are paid, they are not in payment of so much of the services rendered to the date of payment, but are merely an advance of part payment for the whole period for the convenience of him receiving it. We must hold that the contract is entire, under the decisions of this court beginning at an early date in Gordon v. Brewster, 7 Wis. 355, and continuing to the recent case of Glidden v. Meyer, 110 Wis. 1. 85 N. W. 656; Jackson v. Cleveland, 15 Wis. 107; Trowbridge v. Barrett, 30 Wis. 661; Jennings v. Lyons, 39 Wis. 553, 20 Am. Rep. 57; La Coursier v. Russell, 82 Wis. 265, 52 N. W. 176; Winkler v. Wagon Co., 99 Wis. 184, 74 N. W. 793. See, also, Parsons, Contracts, vol. 2, pp. 633, 634.

Exception is taken to the court's construction of the provisions of the contract pertaining to expenses of respondent while in the performance of his services. The contract states in terms that respondent's expenses connected with the service were to be paid in addition to the salary, and that such expenses were "not to exceed an average of seven ($7) dollars per working day." It is contended by appellant that no Sunday should be included to determine the total number of days for which expenses are to be allowed, though respondent actually spent Sunday in the service away from his home. The nature of the employment and the services to be performed must be considered in giving the legal significance to this provision. Obviously, respondent was to travel on the road, which required him to spend some of his Sundays away from his home, subjecting him to the usual daily expenses of his trip, and when required to travel by railway on Sunday, as appears the business might actually demand, his expenses would be no different nor less necessary than on other days. It must be assumed that the parties contracted having these circumstances in view. It was proper and competent to make provision for payment of expenses for Sundays actually spent in the service as a "working day" in fixing the amount to be allowed therefor. All Sundays actually spent in the service we think must be included in calculating the average of expense per "working day." Under this view we find that the expenses incurred by respondent while in the actual service were less than the sum of $7 per day. From this it follows that respondent had not breached the contract, as claimed by appellant, on July 1st, when they notified him that his services were no longer desired.

Respondent tendered his services and offered to continue in his employment after such notice, but was prevented by appellant. The evidence shows that he was voluntarily paid in full for the services actually rendered by him before July 1st, and that he rendered no services thereafter. He admits that he instituted an action against appellant in the month of August, after being dismissed from the service. It is asserted in his behalf that this admission cannot be held to bind him as having recovered any damages sought to be recovered in this action. It sufficiently appears from his evidence that he brought that action after his discharge; that he recovered an amount equal to a month's pro rata salary, with costs, and that the same was paid him by appellant. Nothing appears to contradict this state of facts. The question, then, arises, what are the legal results consequent on this recovery by respondent? Since there was an entire contract, a material breach on the one side as to any part of its terms justified a refusal by the other side to be thereafter bound by any of its provisions. The wrongful dismissal of respondent from service by preventing him from continuing in the employment constituted a breach of the entire contract, and furnished him the occasion to invoke legal relief. He, being free from fault, the law awarded him two remedies: He had a right to act on the breach, and declare the contract rescinded, and recover upon quantum meruit for any services actually rendered; or bring his action at any time before or after the expiration of the prescribed period of service fixed by the contract for the damages actually resulting to him from the breach. With these two alternatives before him, he was required to elect which remedy he would pursue, and whichever one he adopted was in itself a waiver of the other, for the law will not permit him to pursue two remedies to recover damages flowing from one wrong. When he pursued either remedy, he exercised the legal right of choice between these remedies, of which he was entitled to but one, and when he elected the one he waived his right to the other. James v. Allen Co., 44 Ohio St. 226, 6 N. E. 246, 58 Am. Rep. 821; Smith's Leading Cases, p. 9 et seq., and cases cited. It is not suggested that respondent treated the contract as rescinded, and sought recovery before the justice upon quantum meruit for services actually rendered. This he could not do consistently with his subsequent course of action. Such rescission would in itself declare the contract abrogated, and no action for damages for its breach could be maintained. He expressly alleges in his complaint "that by reason of such wrongful breach of the contract by [said defendant] respondent, he [said plaintiff] sustained damages in the sum of $——, and demands judgment therefor, with costs of action." Having elected to stand on his right for damages by reason of the breach, he was confined to that remedy before a justice, and he is presumed

Digitized by Google

to have exhausted his damages in that action. There being only one breach, but one cause of action could arise therefor. It became his legal duty to include all his damages in one recovery. The law does not permit a splitting up of a cause of action into different recoveries. The principle is clearly stated in the case of James v. Allen Co., supra, in the following language: "Where an employé is wrongfully dismissed, but all wages actually earned up to that time are paid, the only action the employé has whether he brings it at once or waits until the entire period of hire had expired, is one for damages for breach of the contract. And the measure of damages will be the loss or injury occasioned by such a breach, and one recovery upon such claim, whether the damages are denominated 'loss of wages' or 'damages for breach,' is a bar to a future recovery." Winkler v. Racine Wagon Co., 99 Wis. 184, 74 N. W. 793, and cases cited; Wood, Master & Servant, 246; Keedy v. Long, 71 Md. 385, 18 Atl. 704, 5 L. R. A. 759; Olmstead v. Bach, 78 Md. 132, 27 Atl. 501, 22 L. R. A. 74, 44 Am. St. Rep. 273; Howard v. Daly, 61 N. Y. 362, 19 Am. Rep. 285; Dousman v. La Caste, 28 Eng. L. & E. 140; 2 Smith's Leading Cases, 41; Lake Shore Ry. Co. v. Richards, 152 Ill. 59, 38 N. E. 773, 30 L. R. A. 33; Hosmer v. Wilson, 7 Mich. 294, 74 Am. Dec. 716; Goodman v. Pocock, 15 Q. B. 576; Davis v. Ayres, 9 Ala. 292. We must hold that the contract for services was an entire one; that respondent's election to prosecute the action before the justice exhausted his rights to sue on a breach of the contract, and constitutes a bar to the recovery sought to be enforced in this action.

The judgment of the lower court is reversed, and the cause is remanded, with directions to enter judgment dismissing respondent's complaint.

BURBACH v. MILWAUKEE ELECTRIC RY. & LIGHT CO.

(Supreme Court of Wisconsin. Oct. 20, 1903.)

GUARDIAN AD LITEM—LIABILITY FOR COSTS—STATUTES—CONSTITUTIONAL LAW—IMPRISONMENT FOR DEBT—EQUAL PROTECTION OF LAWS—LEGISLATIVE CLASSIFICATION—JUDGMENT AGAINST INFANTS—ENFORCEMENT.

1. Rev. St. 1898, § 2931, provides that, when costs are adjudged against an infant plaintiff, the guardian by whom he appeared in the action shall be responsible therefor, and payment may be enforced by attachment. *Held*, that the attachment there referred to was not a capias ad satisfaciendum, but was a mere order to show cause why the guardian should not be punished for contempt for failure to pay such costs, and hence the section was not in violation of Const. art. 1, § 16, prohibiting imprisonment for a debt arising out of or founded on contract, express or implied.

2. Rev. St. 1898, § 2932, provides that judgments for costs against executors, administrators, and trustees shall be collected only out of the estate in their hands. Section 2931 declares that guardians ad litem for infant plaintiffs shall be responsible for costs. *Held*, that there was a substantial difference between guardians ad litem and administrators and trustees justifying a legislative classification, so that section 2931 was not objectionable as denying to guardians ad litem the equal protection of the laws.

3. Rev. St. 1898, § 2920, provides that costs shall be allowed to the defendant unless the plaintiff is entitled to costs; and section 2931 declares that when costs are adjudged against an infant plaintiff the guardian ad litem shall be responsible therefor. *Held*, that in an action by an infant in case he fails to recover the judgment for costs judgment should be rendered in favor of the defendant against the infant which may be enforced against the guardian without the judgment expressly passing on the question of the guardian's liability.

Appeal from Superior Court, Milwaukee County; J. C. Ludwig, Judge.

Action by Peter Burbach, by Charles Mueller, guardian ad litem, against the Milwaukee Electric Railway & Light Company. From a judgment directing payment of costs from the estate of the infant alone, defendant appeals. Modified.

Action for personal injuries, in which the jury found plaintiff guilty of contributory negligence. Upon such verdict, on motion for defendant, order for judgment was made directing judgment for costs against the plaintiff, Peter Burbach, and ordering "that said judgment may be collected of said guardian ad litem, Charles Mueller, and execution thereon may issue against the said Charles Mueller." Thereafter, and before judgment, upon plaintiff's motion, the court modified such order "by vacating, setting aside, and striking out that provision of the said order which directs that the judgment in the above-entitled action may be collected of Charles Mueller, the above-named guardian ad litem, and inserting in lieu thereof the direction that said judgment shall be collected from the estate of the above-named infant, Peter Burbach, solely," to which order the defendant duly excepted. Thereupon judgment was rendered dismissing the action, adjudging recovery by the defendant of $37.40 costs, and ordering and adjudging "that this judgment shall be collected solely from the estate of said infant, Peter Burbach." From that judgment, and the whole and every part thereof, defendant appeals.

Spooner & Rosencrantz, for appellant. Cummings, Hayes & Thiel, for respondent.

DODGE, J. (after stating the facts). Since 1849, at least, it has been the declared legislative policy of the estate that one who, as next friend or guardian ad litem, lends himself to the bringing of a suit by an infant plaintiff, shall be responsible for any costs adjudged against such plaintiff. Section 29, c. 90, Rev. St. 1849, was adopted directly from New York, where it had been enacted in 1829, and declared this policy. In 1856, in the adoption of the Code also from New York, was enacted section 226, c. 120, p. 189, Gen. Laws 1856, identical in words with our

¶ 3. See Infants, vol. 27, Cent. Dig. § 335.

Digitized by Google

present section 2931, Rev. St. 1898, preserving the declaration that such guardian shall be responsible for costs adjudged against the plaintiff, and merely adding, "and payment may be enforced by attachment." This policy, standing thus unassailed for half a century, has, by the judgment of the superior court, been set at naught. Of the grounds of this decision we are not fully informed. The most strenuous contention of respondent's counsel is, however, that section 2931 is unconstitutional, because the provision for enforcement of payment of costs by attachment is in disobedience of section 16, art. 1, Const., prohibiting imprisonment for a debt arising out of or founded on contract, expressed or implied. Even if this position were conceded, the conclusion of the court below would seem a pretty complete non sequitur. The substantial enactment of the Legislature is that the guardian ad litem shall be responsible for costs, and no reason is apparent why this may not stand, although the Legislature may have authorized an unconstitutional method of enforcing that responsibility. It is a fundamental canon of statutory and constitutional discussion that a statute will be sustained as far as possible, eliminating any unconstitutional provisions thereof, unless it clearly appears that the latter were so integral to the whole purpose of the legislation that one part cannot stand without the other. McGillivray v. School Dist., 112 Wis. 354, 359, 88 N. W. 310, 58 L. R. A. 100, 88 Am. St. Rep. 969. That surely cannot appear here, for during the period at least from 1849 to 1856 the provision for the liability of the next friend did stand, with no specific direction as to how it was to be enforced, except as contained in other general provisions regulating the power and proceedings of courts. On the contrary, it must be apparent on a moment's consideration that such severance of the statute of 1856 is entirely possible, so that the court can and ought to sustain the statutory behest that the guardian ad litem be liable, even though it could not sustain the further provision that such liability be enforced by attachment.

But is the Legislature restrained from this latter provision by the constitutional prohibition against imprisonment for debt? In discussing this same constitutional prohibition (Re Meggett, 105 Wis. 291, 297, 81 N. W. 419, 422), we said: "It does not follow, necessarily, because a party owes a debt, and is imprisoned until he pays the same sum of money, that he is imprisoned for a debt; not more than it followed because Debs was imprisoned for doing an act which was a crime that he was being imprisoned for a crime without trial by jury (In re Debs, 158 U. S. 564, 15 Sup. Ct. 900, 39 L. Ed. 1092; Eilenbecker v. Dist. Ct. of Plymouth Co., 134 U. S. 31, 10 Sup. Ct. 424, 33 L. Ed. 801); nor more than it follows because one is imprisoned upon an execution against the body under a judgment for conversion or embezzlement that he is imprisoned for debt, although he may be indebted on implied contract for the property converted or the money embezzled." It is under that principle that this and other courts have always recognized that the constitutional prohibition against imprisonment for contract debt did not take away the comprehensive and inherent powers of the courts to protect themselves and parties before them against willful disobedience of their orders, upon the theory that such disobedience constituted a contempt of the court's authority. Re Meggett, supra. But, indeed, it is not contended that, if an attachment against a recalcitrant guardian ad litem, who fails to pay the costs for which the statute makes him liable, is a mere exercise of the contempt power of the court, it is forbidden by our Constitution. The respondent rests upon the contention that the statute attempts to confer an absolute power of imprisonment by process substantially identical with the common-law writ of capias ad satisfaciendum, and founds this view upon Grantman v. Thrall, 31 How. Prac. 464, and Granholm v. Sweigle, 3 N. D. 476, 57 N. W. 509, which seem to offer some support for it. Thus, in Grantman v. Thrall it was said by the General Term of the Supreme Court of New York, in 1866, apparently without much consideration, that the words "payment thereof may be enforced by attachment" mean "a process in the nature of ca. sa. admits of no doubt," from which it was argued that the attachment mentioned in the statute was not a preliminary process to bring a party before court to show cause why he should not be punished by imprisonment as for contempt, but that the court was required to issue its absolute writ ca. sa. for his imprisonment until payment of the sum for which he was so liable. Upon the authority of this case the Supreme Court of North Dakota, dealing with a statute identical to both that in New York and our own, and with a writ commanding absolutely arrest and imprisonment till the judgment was paid, held that the constitutional prohibition against imprisonment for debt was infringed. It seems clear to us that the premise upon which both of these courts proceeded was an erroneous one. The Grantman Case is quite distinctly overruled on this point in the same court by subsequent cases. Morrison v. Lester, 11 Hun, 618; Id., 15 Hun, 538; Schoen v. Schlessinger, 57 How. Prac. 490; Miller v. Woodhead (Sup.) 5 N. Y. Supp. 88—in which it is held that the process of attachment authorized by the statute is the ordinary one long and well known as the mesne process by which one is brought before the court to answer for an alleged contempt, and upon which the court investigates and decides the fact of contempt and exercises its discretion as to the further steps to be taken by way of punishment or of coercing obedience to its former precept, and that it is error

Digitized by Google

for a court to substitute in lieu thereof its absolute process capias ad satisfaciendum, commanding a sheriff to take and imprison a debtor until he makes satisfaction. Independently of the direct authority in New York upon the question, we cannot seriously doubt that the word "attachment" is used in our statute in its correct signification, and that it authorizes what is described by Bouvier (1 Dict. 187) as "a writ issued by a court of record, commanding the sheriff to bring before it a person who has been guilty of contempt of court, either in neglect or abuse of its process or of subordinate powers. 3 Bl. Com. 280; 4 Id. 283." The word "attachment" was by no means novel in our statutes at the time of the enactment of the Code in 1856. Many illustrations of its use might be pointed out, but one specially germane to the subject now in hand is presented by the statutes of 1849 on the subject of contempt (subdivision 8, § 1, c. 115, Rev. St. 1849), authorizing punishment by fine and imprisonment in "all other cases where attachments and proceedings as for contempts have been usually adopted and practiced in courts of record, to enforce the civil remedies of any party or to protect the rights of any such party." This is specially applicable, for under an exactly similar statute the courts of New York had been accustomed to enforce the liability of the next friend for costs by attachment prior to the adoption of the Code, which expressly authorized it for that purpose (Wice v. Insurance Co., 8 Daly, 70; Miller v. Woodhead [Sup.] 5 N. Y. Supp. 88), and such was the recognized practice. 1 Tidd's Practice, 100; 2 Burrill's Practice (2d Ed.) 81; Slaughter v. Talbot, Barnes, 128; s. c. Willes, 190. The same significance has also been given by this court to identical language in what is now section 2933, Rev. St. 1898, making an assignee liable for costs and subject to attachment to enforce payment, in De Witt v. Perkins, 25 Wis. 438, where the court, instead of attempting to issue its common-law writ for the imprisonment of an assignee until he satisfies the judgment, commanded him to appear and show cause why he should not be required to make payment; evidently considering the whole procedure as identical with that upon other charges of contempt. Contempt proceedings are especially appropriate to control of guardians ad litem, for they are officers of the court, and subject to its commands. Richardson v. Tyson, 110 Wis. 572, 86 N. W. 250, 84 Am. St. Rep. 937; subdivision 1, § 3477, Rev. St. 1898. Again, they of course are not subject to execution, since they are not parties to the action and no judgment can properly be entered against them. Thus they fall within the class described in subdivision 3, § 3477, subject to punishment as for contempt for nonpayment of money. The procedure is carefully regulated so as to ensure due notice and hearing before any order for imprisonment passes. Sections 3480 et seq., Rev. St. 1898. From all these considerations, the conclusion is to our minds irresistible that section 2931 authorizes nothing but the exercise of the inherent power of the courts against contempts, and in no wise infringes upon the immunity from imprisonment for debt guarantied by our Constitution.

2. Another suggestion is made by respondent, that guardians ad litem are by this statute denied the equal protection of the laws, for that they are subjected to burdens not resting on other parties plaintiff nor on other fiduciaries, such as executors, administrators, or trustees. They are, however, so distinguished from all such others that we can not doubt the power of the Legislature to classify them separately. They are not parties to the suits they bring, nor subject to entry of judgment directly against them, and yet behind the shelter of the name of a minor, perhaps irresponsible, they have sufficient control to harass the defendant and absorb the attention of the court. If they do so without proper grounds, why should they not be liable at least for costs, like any other plaintiff? Again, they differ from all the other fiduciaries mentioned in that they need neither hold nor control any property of the beneficiary for whom they sue, while the very existence of an executor or trustee presupposes property in his hands out of which can be satisfied the costs of the suit he brings, if he acts for the welfare of his beneficiary. This distinction entirely justifies the provision of section 2932, Rev. St. 1898, that judgments for costs against such trustees shall be collected only out of the estate in their hands, but for bad faith, and the contrary provision that guardians ad litem shall be responsible personally to the defendant. Such guardian, if he acts in good faith, and for the benefit of the minor, is, of course, entitled to be reimbursed such costs, in common with other necessary expenses, out of the estate of the minor, if he has any. Tyson v. Richardson, 103 Wis. 397, 79 N. W. 439. We conclude, therefore, that no reason is suggested why section 2931, Rev. St. 1898, is not within the just powers of the Legislature, and that it should be given effect according to its terms. Clearly, the decision of the trial court, as embodied in the judgment appealed from, denied such effect to that statute, and was erroneous.

A further misconception, shared apparently by the court below and the counsel upon both sides, was that the judgment to be entered needed to expressly pass on the question of liability of the guardian ad litem. The true view on this subject, as fully illustrated by the New York decisions—albeit practice decisions, but which we deem founded on reason—is that the judgment for costs in the case of an infant plaintiff should be, in terms, against the plaintiff, as in any other case. Whether he may or may not have property within reach of ordinary execution is not significant. Schoen v. Schlessinger, 57

Digitized by Google

How. Prac. 490. The minor is the plaintiff, and, when he fails to recover, judgment for costs in favor of the defendant and against him is warranted by section 2920, Rev. St. 1898, in the same form as if he were not a minor. Section 2931, Rev. St. 1898, recognizes this by imposing liability upon the guardian "when costs are adjudged against an infant plaintiff." The liability of the guardian rests not upon the form of the judgment, but upon the express provision of the statute. It results that the judgment in this case should have followed the ordinary form that the defendant do have and recover from the plaintiff a specified sum of costs, and that the interpolation therein of the provision that they should be enforceable only against the estate of the minor was erroneous.

The judgment appealed from is modified by striking therefrom the paragraph: "And it is further ordered and adjudged that this judgment shall be collected solely from the estate of the said infant, Peter Burbach," and, as so modified, is affirmed. Appellant to recover costs in this court.

DALY v. MILWAUKEE ELECTRIC RY. & LIGHT CO.

(Supreme Court of Wisconsin. Oct. 20, 1903.)

STREET RAILROADS — USE OF STREETS — OPERATION OF FREIGHT CARS—WANT OF AUTHORITY — NUISANCE — INJURIES TO PEDESTRIANS — COMPLAINT — AVERMENT OF NEGLIGENCE—NECESSITY.

1. Where a street railway company operated freight cars over its tracks without authority and in violation of law, the operation of such cars constituted a nuisance, for which a pedestrian injured thereby was entitled to recover without regard to the care exercised in operating such trains, and hence a complaint alleging such operation a special injury was not demurrable for failure to allege negligence in the operation of such cars.

Appeal from Circuit Court, Milwaukee County; Lawrence W. Halsey, Judge.

Action by James Daly against the Milwaukee Electric Railway & Light Company. From an order overruling a demurrer to plaintiff's complaint, defendant appeals. Affirmed.

This is an appeal from an order overruling a demurrer to a complaint which alleges, in effect, that the plaintiff is an infant eight years of age; that his father was duly appointed his guardian herein; that the defendant was duly incorporated under the statutes of this state, and at all the times mentioned authorized to operate street railways therein, and particularly in the city of Milwaukee; that the defendant derived its authority from certain ordinances of the city; that among others the defendant had a double-track street railway on Wells street from Eleventh street west to the city limits, upon which to run its cars, under the provisions of the ordinance, which, among other things, provided that "the said tracks and railway shall be used for no other purpose than the transport of passengers and their ordinary baggage, and the cars or carriages used for that purpose shall be of the best style and class in use on such railways"; that such provision has continued and remained in full force, and is a limitation upon the use which may be made of such tracks, and that no right has ever been granted in any form to the defendant to operate cars upon any of its tracks in the streets in the city of Milwaukee except for carrying passengers; that during the year last preceding at frequent, but irregular, intervals, the defendant ran a large number of its trains upon its tracks in the city—including those on Wells street—propelled by electricity, adapted solely for carrying freight and heavy material, carrying no passengers, nor stopping to receive or discharge passengers, but running continuously from their starting point to their destination in the manner of ordinary freight trains, used only for carrying freight and heavy material for compensation or profit to the defendant, such freight and material being carried to and from places outside the city; that such freight trains so run in the streets of the city were dangerous to the community, and especially to children lawfully upon such streets, and that they have been so run by the defendant wholly without authority of law, and in direct violation of law; that November 18, 1902, the defendant ran one of such trains consisting of five of such freight cars which had brought freight and heavy material over Wells street from beyond the city limits to some place in the city, and which was engaged in such traffic, and for the purpose of further hauling freight and material from beyond the city to some place within the same, said cars then being empty, westwardly on Wells street, without any authority and in direct violation of law; that such train was so run at a very high and dangerous rate of speed along such public street, passing street crossings at very frequent intervals, without giving signals, through a populous part of the city, passing schoolhouses when children were on their way home from school; that the plaintiff then being lawfully upon said Wells street, seeking to cross the same, and exercising due care for one of his age, at the intersection of Twelfth street, was struck by said freight train of the defendant and thrown down thereby, partly under the wheels thereof, and one of his legs was crushed so that it had to be amputated, and a portion of his foot of the other leg lacerated, crushed, and torn so that a large part thereof had to be removed, subjecting the plaintiff to great pain and suffering, and crippling him for life, to his damage.

Spooner & Rosecrantz, for appellant. Winkler, Flanders, Smith, Bottum & Vilas, for respondent.

Digitized by Google

CASSODAY, C. J. (after stating the facts). Counsel for the defendant contend that the complaint fails to state a cause of action because it does not specifically allege any negligence of the defendant in operating the train or in the construction of the cars or the track or otherwise. It does allege that the defendant was only authorized to use its tracks and railway for transporting passengers. Had the injury resulted from the use of such passenger cars, there might have been some force in the objection. Chicago & Eastern Illinois R. R. Co. v. Loeb, 118 Ill. 203, 8 N. E. 460, 59 Am. Rep. 341; Randle v. Pacific R. R., 65 Mo. 325. But the gravamen of the complaint is that the plaintiff was injured by reason of the defendant running freight cars upon its tracks without authority and in violation of law. The question whether an indictment would lie at common law against a corporation for a misfeasance was answered in the affirmative by the Queen's Bench many years ago. The Queen v. Great North of England Ry. Co., 9 Queen's Bench, 315, 325. In that case it was said by Lord Denman, C. J., that "a corporation * * * may be guilty as a body corporate of commanding acts to be done to the nuisance of the community at large." Id. 326. Thus, it has been held in Massachusetts that "a railroad laid out over and along a highway in such a manner as to obstruct it, without express statute authority or necessary implication, is liable to indictment as a nuisance." Commonwealth v. Old Colony & Fall River R. R. Co., 14 Gray, 93. See, also, State v. Troy & Boston R. R. Co., 57 Vt. 144; Evans v. The C., St. P., M. & O. R. Co., 86 Wis. 597, 603, 57 N. W. 354, 39 Am. St. Rep. 908. So it is well settled that if an individual, without fault on his part, suffers special damage by any unlawful act in obstructing a highway, he has a right of action therefor, although the party doing the act is also liable to an indictment for the same. Thayer v. Boston, 19 Pick. 514, 31 Am. Dec. 159; Zettel v. The City of West Bend, 79 Wis. 316, 319, 48 N. W. 379, 24 Am. St. Rep. 715, and cases there cited. Thus it has been held in New York that "the construction and maintenance of a street railway by any individual or association of individuals without legislative authority is a public nuisance, and subjects those maintaining it to a private action in favor of any person sustaining special injury therefrom." Fanning v. Osborne, 102 N. Y. 441, 7 N. E. 307. To the same effect, Beekman v. Third Avenue R. R. Co., 153 N. Y. 144, 152, 47 N. E. 277; Borough of Stamford v. Stamford Horse Ry. Co., 56 Conn. 381, 15 Atl. 749, 1 L. R. A. 375; Wellcome v. Inhabitants of Leeds, 51 Me. 313, 315. To the extent that the defendant exceeded its authority by running freight cars over its tracks without legislative permission, express or implied, it must be regarded as acting in violation of law, and hence answerable accordingly. This has, in effect, been repeatedly held by this court. Evans v. The C., St. P., M. & Omaha R. Co., 86 Wis. 597, 603, 57 N. W. 354, 39 Am. St. Rep. 908; Linden Land Co. v. Mil. El. Ry. & L. Co., 107 Wis. 493, 513, 83 N. W. 851; Allen v. Clausen, 114 Wis. 244, 90 N. W. 181. Thus it is stated by a standard text-writer "that for personal injuries sustained by a person by reason of any nuisance in a highway, or injuries thereby inflicted upon his team or property, the person creating the nuisance, as well as the person maintaining it, is always liable in a civil action, if the person injured was in the exercise of ordinary care when the injury was inflicted; and no degree of care on the part of the person erecting or maintaining the nuisance will exempt him from liability." 2 Wood on Nuisances (3d Ed.) § 703. The theory is that, the act being wrongful, the party doing it is answerable for all the consequences that flow therefrom to a person who is not chargeable with negligence by reason of which the injury is inflicted. Id. The allegations of the complaint, if true, are sufficient to authorize a jury to find that the plaintiff's injuries were without fault on his part, and were actually caused by the running of the freight cars on the defendant's tracks in violation of law; and hence the complaint states a cause of action.

The order of the circuit court is affirmed.

WISCONSIN FARM LAND CO. v. BULLARD.

(Supreme Court of Wisconsin. Oct. 20, 1903.)

BROKER'S COMMISSIONS—SALE BY OWNER—RELEASE—EVIDENCE — ESTOPPEL — ISSUES AND PROOF — SPECIAL VERDICT — APPEAL—FINDINGS—REVIEW—HARMLESS ERROR.

1. Where, in an action for broker's commissions on a sale effected by the owner, estoppel in pais was not pleaded, evidence that before making the contract the owner had a conversation with plaintiff's managing agent, in which it was agreed that, if defendant effected a sale, plaintiff would make no claim for commissions, and that relying thereon defendant contracted with the purchaser at a reduced price, was inadmissible.

2. Where in an action for broker's commissions the jury found on sufficient evidence that the owner had been released from his contract to pay plaintiff's commissions before the sale, the erroneous admission of evidence establishing an estoppel against plaintiff was harmless.

3. Under Rev. St. 1898, § 2858, providing that a special verdict shall be prepared by the court in the form of written questions relating only to material issues of fact admitting a direct answer, where the only issue as to a release in an action for broker's commissions was whether plaintiff had absolutely released defendant from liability for commissions, a special verdict submitting the issue whether defendant was wholly released was not objectionable for failure to require a finding as to whether the release was absolute or only partial, as to which the evidence was conflicting.

4. A special finding will not be reversed if there is any credible evidence to support it.

¶ 1. See Estoppel, vol. 19, Cent. Dig. § 300.

Digitized by Google

5. In an action for broker's commissions the jury specially found that plaintiff was the procuring cause of the sale by the owner to the purchaser, but also found that the plaintiff, before the sale, had released defendant from the obligation to pay any commission in case he sold the farm himself, and that defendant relied on such release in selling the farm. *Held*, that the finding that plaintiff was the procuring cause only meant that plaintiff drew the purchaser's attention to the farm, and did not constitute a finding that the sale was in fact made by plaintiff, and not by the owner, so as to entitle plaintiff to commissions notwithstanding the release.

Appeal from Circuit Court, Clark County; James O'Neill, Judge.

Action by the Wisconsin Farm Land Company against Andrew J. Bullard. From a judgment in favor of defendant, plaintiff appeals. Affirmed.

Action upon a contract worded as follows: "This agreement, made and entered into this 14th day of August, 1901, by and between the Wisconsin Farm Land Co., of Neillsville, Wisconsin, and Andrew Bullard, Town of Weston of Clark Co., Wisconsin.

"Witnesseth: The said Andrew Bullard for and in consideration of the agreements hereinafter made, does hereby appoint the said Wisconsin Farm Land Company his exclusive agents for the period of until the first of March from the date hereof, except as hereinafter provided, for the sale of the following described lands and properties.

"NE of NE, S. 24, Town 25, 3 W, Acres 40.

"SE of NE, S. 24, Town 25, 3 W, Acres 40.

"The price of said lands and properties shall be $4,500. And in case said lands and properties are sold, $500 shall be retained by the Wisconsin Farm Land Co. from the first cash payment, as payment for their services in effecting such sale, and expenses incurred by them in advertising said property, or showing same to prospective buyers. Said sum of $500 shall be in full payment for all services and expenses of said Wisconsin Farm Land Co. and no further demand for such services or expense shall be made. The said A. J. Bullard hereby reserves the right to, if possible, find a purchaser for, and make sale of the above described lands and properties at the said price of $4,500. And in case a purchaser for said properties is so found he hereby agrees to forthwith bring such purchaser to the office of the Wisconsin Farm Land Co. at Neillsville, where all papers of transfer shall be made and executed without cost; and shall pay the Wisconsin Farm Land Co. the sum of $500 as payment for expenses incurred by them in advertising of said properties and commission for the sale thereof. It is further agreed that in case no purchaser is found for said properties within the time specified, that the said Wisconsin Farm Land Co. shall make no charge for such services rendered or expenses incurred by them in their efforts to effect such sale; except where special expense is authorized and ordered by the said A. J. Bullard in which case such expense shall be borne by him whether the sale is effected or not.

"Signed and agreed to on the date first above written.

"Wisconsin Farm Land Company,
"Per R. W. Canfield.
"A. J. Bullard."

Plaintiff alleged in the complaint the making of such contract; that pursuant thereto it procured one Holtz as prospective purchaser to examine the land; that subsequently defendant, independently of plaintiff, contracted such land to Holtz for $4,350, receiving $150 as a down payment; that later the contract was fully consummated, whereby plaintiff became entitled to the commission of $500 stipulated for. Defendant pleaded want of consideration to support the contract, and that he was released therefrom before the sale was made.

There was conflicting evidence upon three propositions, which were submitted to the jury for solution by special verdict. The result was as follows:

"Question No. 1. Was the Wisconsin Farm Land Company the procuring cause of the purchase by Holtz of defendant's farm?

"Answer: Yes.

"Question No. 2. Did the plaintiff by its agent Canfield before the sale of the farm, release the defendant from the obligation to pay any commission in case defendant sold the farm himself?

"Answer: Yes.

"Question No. 3. If you answer the last question 'Yes' then did defendant rely and act upon such release in selling to Holtz?

"Answer: Yes."

Plaintiff moved for judgment on the verdict, and defendant moved to change the answer to question No. 1 from "Yes" to "No" and for judgment. Both motions were denied. Judgment was thereafter ordered dismissing the complaint with costs.

Sturdevant & Clark, for appellant. Chas. F. Grow and J. R. & C. R. Sturdevant, for respondent.

MARSHALL, J. (after stating the facts). Evidence was allowed against respondent's objection, to the effect that before making the contract of sale with Holtz he had a conversation with Canfield, appellant's managing agent, in which it was agreed that if respondent effected a sale of the land appellant would make no claim for commission under the contract; and that, relying thereon, he contracted with Holtz, making the price of the land to him $4,350. Error is assigned on that. The evidence seems to have been offered to establish an estoppel in pais. It was certainly not competent for any other purpose. As no such estoppel was pleaded and there was ample opportunity to do so, the evidence was irrelevant and should have been rejected. Gill v. Rice, 13 Wis. 549; Warder v. Baldwin, 51 Wis. 450, 8 N. W. 257; Gans

Digitized by Google

v. St. Paul F. & M. Ins. Co., 43 Wis. 108, 28 Am. Rep. 535. However, the error was not prejudicial if the finding of the jury that respondent was released from his contract cannot be disturbed.

The point is made that the verdict did not dispose of all the issues, since it only covered the subject of whether respondent was released from his contract; that the evidence on one side was to the effect that there was an absolute release, and on the other that there was a conditional or partial release, hence that the questions should have been framed so as to require the jury to pass on whether there was an absolute or partial release. In that counsel falls into the common error of supposing that a special verdict should be framed to cover each particular matter of dispute between witnesses instead of facts in issue under the pleadings. The only proper test to which a special verdict should be subjected is the pleadings. If it covers all the facts therein put in issue, in respect to which the evidence is conflicting, it is sufficient. Such is the plain letter of the statute, section 2858, Rev. St. 1898. Mauch v. Hartford, 112 Wis. 40, 54, 87 N. W. 816; Goesel v. Davis, 100 Wis. 678, 76 N. W. 768; Baxter v. C. & N. W. R. Co., 104 Wis. 307, 313, 80 N. W. 644; Cullen v. Hanisch, 114 Wis. 24, 89 N. W. 900. The only issue raised by the pleadings on the subject of a release from the contract was whether respondent was wholly released. The form of the question submitted fitted that issue perfectly. If the attention of the jury had not been particularly called to the state of the evidence on the subject there would have been no reasonable probability of their rendering such a verdict as they did without coming to the conclusion that there was an absolute release as testified to by respondent. But the possibility of any mistake in that respect was effectually guarded against by the instruction given by the court to the effect that if the jury believed that there was but a partial or conditional release they should answer the question "No."

It is claimed that the finding of the jury as to appellant having released the contract is contrary to the weight of the evidence. That may be. If such be the fact it constitutes no ground for the reversal of the judgment. It is too familiar to warrant more than a mere reference to it, that if there is any credible evidence to support the finding of the jury their decision upon appeal must be regarded as a verity.

The further claim is made that, the jury having found that appellant was the procuring cause of the sale to Holtz, it was entitled to the commission stipulated for in the contract, as, according to respondent's own testimony, he was not to be deemed released except as regards a sale made by him; that the verdict that appellant was the procuring cause of the sale is wholly inconsistent with the view that respondent made the sale. We do not look at the findings of the jury and the evidence that way. The finding that appellant was a procuring cause of the sale obviously means no more than that it drew Holtz's attention to the farm, and that its act in that regard was what led up to the sale. That finding would have been fatal to respondent if the jury had decided that the release was conditional or partial, as appellant's evidence tended to prove. Having decided that the release was unconditional, the mere fact that appellant so interested Holtz in respondent's land that it led to his making a sale thereof, does not furnish appellant a ground of action. Notwithstanding it directed Holtz's attention to the land, it was perfectly competent for it to subsequently release respondent absolutely from his contract, leaving him free to deal with Holtz or any one else, as the jury found was done.

The foregoing leaves nothing more that need be said in disposing of this case. The judgment must be affirmed.

So ordered.

WOOD v. CHAMBER OF COMMERCE OF CITY OF MILWAUKEE.

(Supreme Court of Wisconsin. Oct. 20, 1903.)

CORPORATIONS — BY-LAWS — VIOLATIONS — TRIAL OF MEMBERS—JURISDICTION OF EQUITY.

1. Where the by-laws of a corporation provide for the trial of members charged with violations of its by-laws by its board of directors, and authorize the board to censure, suspend, or expel such members as it may determine from the nature of the offense committed, a court of equity will not prevent the board from exercising its jurisdiction to try a member charged with violations of the by-laws, on the theory that, if permitted to do so, it will commit jurisdictional error.

2. Where the board of directors of a corporation is authorized to hear complaints charging members thereof with violations of the by-laws, a member charged with a violation, who deems the charges indefinite, must appeal to the trial board to have them made specific, and cannot apply to a court of equity for relief in advance of the board's action on the matter, on the assumption that when called upon to do so the board will either refuse to perform its duty or commit jurisdictional error otherwise.

3. The by-laws of a corporation organized to promote just principles in trade, which provide that it shall be the duty of the board of directors to examine charges against any member of the association, and if the person accused shall be found guilty of a violation of the rules, by-laws, or regulations of the corporation, "of making or reporting any false or fictitious purchases or sales," he shall be censured, suspended, or expelled by the board, and which also make it unlawful for any member to engage in the business of dealing in differences on the fluctuation in market price of any commodity without a bona fide purchase and sale of property, are not limited to conduct concerning the corporation or any of its members, but cover conduct on the part of members without regard to place or to the person concerned therein.

4. Under the by-laws of a corporation which provide that the board of directors shall examine charges against any members of the corporation when made in writing "by any other member or members," the members of the board of directors are not precluded from filing

charges against a brother member, or exempted from performing their duty as directors to examine into charges filed, though filed by members of the board.

5. A board of directors of a corporation exercising under the by-laws thereof quasi judicial power in examination of charges made against members of the corporation is not ousted of its jurisdiction to examine charges made against a member merely because the charges were made by one of the directors.

6. The method prescribed by the by-laws of a corporation for disciplining its members are supreme unless void for unreasonableness, or invalid as contrary to the law of the corporation or to the law of the land, and equity will not interfere on the theory that a member will not have a fair hearing by the officers of the corporation authorized to discipline him.

Appeal from Circuit Court, Milwaukee County; W. D. Tarrant, Judge.

Suit by Lewin A. Wood against the Chamber of Commerce of the City of Milwaukee. From an order dissolving a temporary injunction, plaintiff appeals. Affirmed.

The action of the court was based upon the pleadings and supporting affidavits. The substance of the complaint is as follows: The defendant is a corporation duly organized under the laws of Wisconsin. It possesses power to make and enforce by-laws not inconsistent with its charter or the law of the land. Its governing board consists of nine directors. Such board possesses power to investigate complaints against members for violations of its rules and by-laws and to discipline such members, if found guilty, in the manner prescribed in such by-laws. The declared objects of the corporation are:

"To promote just and equitable principles in trade, to correct abuses, to establish and maintain uniformity in the commercial usages of the city, to acquire, preserve and disseminate valuable business information, and to support such regulations and measures as may advance the mercantile and manufacturing interests of the city of Milwaukee."

Among the by-laws of the corporation are the following:

Rule 4, § 10: "It shall be the duty of the board of directors to examine charges against any member of the association, when made in writing to the president or secretary, by any other member or members, and if the party accused shall be found guilty of improper conduct of a personal character in the rooms of the association; of a violation of the rules, by-laws or regulations of the association; of making or reporting any false or fictitious purchases or sales; of any act of bad faith; of any attempt at extortion; of any act contrary to the spirit which should govern all commercial transactions; or of any other dishonorable or dishonest conduct, he shall be censured, suspended or expelled by the board of directors, as it may determine from the nature and gravity of the offense committed. It shall be deemed an offense against the rules of the Chamber of Commerce for any person to act as a broker or commission merchant, or to buy or sell any grain or other property for an agent or employé of any telegraph company doing business in the city of Milwaukee, and upon complaint, in writing, of a member of the Chamber of Commerce or any officer or agent of any telegraph company, charging such offense against any member of this association, the board of directors shall investigate such complaint; and if the member accused shall be found guilty, he shall be censured, suspended or expelled, as the directors may determine, in the manner prescribed in this section."

Rule 4, § 13: "All charges, excepting as to violations under section 9 of rule XI, made to the board of directors against any member of the association for any default, misconduct or offense, shall be in writing, and shall state the default, misconduct or offense charged, and the same shall be signed by one or more members of the association or by a business firm, one or more of whose members shall be members of the association."

Rule 4, § 14: "No member shall be censured, suspended or expelled under this rule without an examination of the charges against him by the board of directors, nor without having an opportunity of being heard in his own defense. No examination shall take place until the member accused shall have had six days' prior notice of examination served on him, or fifteen days' prior notice mailed to him in case he has no place of business or residence in the city of Milwaukee. All such notices must be accompanied by a copy of the charges against him, in writing. Such notice may be served upon the accused personally by the secretary, or any assistant, or it may be left at the ordinary place of business or residence of the accused; or it may be mailed as above, in either of which cases the notice shall be considered sufficient, and the examination may proceed, whether the accused be present or not."

Rule 4, § 27: "Any member of the Chamber of Commerce who shall be interested or associated in business with, or who shall act as the representative of, or who shall knowingly execute any order or orders for the account of any organization, firm or individual engaged in the business of dealing in differences on the fluctuations in the market price of any commodity without a bona fide purchase and sale of property, with intent for an actual delivery, shall be deemed guilty of unmercantile conduct, which renders him unworthy to be a member of the association; and upon complaint to and conviction thereof by the board of directors, he shall be expelled from membership in the association."

Rule 12, § 1: "The president of the Chamber of Commerce shall at the first meeting of the board of directors after the annual election in each year, or as soon thereafter as practicable, appoint a committee of five to serve for one year, or until their successors shall have been appointed and qualified, to be

Digitized by Google

known as the 'Committee on Membership,' whose duty it shall be to examine all applications for membership; and any male person of legal age wishing to become a member of this association shall present an application in writing, signed by a member, either through the secretary or the chairman of the committee on membership, and a majority of said committee being satisfied that said applicant should be admitted as a member, the name of said applicant shall be placed on the bulletin board of the exchange room, at least ten days prior to any meeting of the board of directors. During the time that the name of such applicant is thus posted, any member in good standing may file with the secretary in writing, signed by such member, objection to the admission of such applicant as a member, and if seven or more members object to the election of such applicant, he shall be ineligible for election; but if no member, or less than seven members object to his election, the secretary shall report the name of such applicant to the board of directors. The board of directors shall vote by ballot upon the election of every applicant thus proposed for membership, and if there be seven ballots in his favor and not more than two ballots appear against him, he shall be declared elected, and upon signing an agreement to be governed by the charter, rules and by-laws of the Chamber of Commerce, and paying an initiation fee of five thousand dollars, together with the annual or other assessment then due, or on presentation of a certificate of unimpaired or unforfeited membership duly transferred and paying the transfer fee of five dollars he shall become a member of the Chamber of Commerce.

"Members hereafter (after May 4, 1889) admitted will not be entitled to participate in the Gratuity Fund unless qualified under the requirements prescribed in the rules relating thereto."

Rule 12, § 2: "Before any membership can be transferred under the provisions of this rule, notice of, or application for, such transfer shall have been posted upon the bulletin of the exchange room for at least ten days; when, if no objection shall have been made on account of any unsettled contracts, claims, demands, or complaints against the holder of such membership, it shall thereupon be assumed that the membership is unimpaired; and after transfer of membership no subsequent complaint, claim or demand against the former holder shall impair such membership so transferred and in the hands of an innocent party. But such transfer of membership shall not entitle the member to whom the same shall be transferred to participate in the gratuity fund, unless qualified under the requirements of the rules relating to said fund. The notice or application for transfer shall state the name of the person to whom it is proposed to be made. Objections to the transfer must be in writing, signed by the party objecting, and filed with the secretary, and the party objecting shall also, on the day of filing the same, serve a copy of his objections upon the applicant for transfer. The board of directors shall, upon hearing the parties, determine the sufficiency of such objections. In case any membership shall be transferred in violation of any of the foregoing provisions, such transfer shall be null and void."

Rule 12, § 7: "Every member shall be entitled to receive a certificate of membership, bearing the signature of the president and secretary, and the seal of the corporation, which certificate, if the membership it represents be not impaired or forfeited under the rules and by-laws of the association, and if the member holding it have no unadjusted or unsettled claims or contracts outstanding against him, held by members of the Chamber of Commerce, shall be transferable upon the books of the association to any person duly elected a member, upon the payment of five dollars, and any unpaid assessment due thereon. The certificate of membership of a deceased member shall be transferable in like manner by his legal representative."

For many years certificates of membership in the corporation have been freely bought and sold and transferred by assignment, and the formalities indicated in the quoted rules have not been regarded as material, nor has any attempt been made to enforce the same except in the event of the holder of an assigned certificate applying to be elected a member of the corporation. The uniform custom has been to regard the transfer of a membership certificate as terminating his connection with the corporation. In May, 1902, plaintiff purchased in the regular course of business and took an assignment of a membership in the association, paying $970 therefor. Such proceedings were thereafter duly had that he was elected a member of the association and a certificate, in due form, was issued to him in place of his assigned certificate. Since that time plaintiff has paid all his dues to the corporation and obeyed all its by-laws. He is a member of the firm of Edwards, Wood & Co., a firm composed of Robert H. Edwards, Forest B. Wood and himself. The firm has always been engaged exclusively in the business of commission brokers, dealing for their customers in stocks, bonds, grain, produce and provisions for future delivery, and in cash grain, and plaintiff has been exclusively engaged in transacting its business. August 16, 1902, plaintiff sold and assigned his certificate of membership in the usual way, to E. L. Brown, then a member of the association, and a member of the firm of I. G. Andrews & Co. August 20, 1902, Brown deposited said certificate with the defendant, together with the required fee for the issuance of a new certificate, and requested such transfer as provided in section 7, rule 12, and at the same time requested defendant to take the nec-

Digitized by Google

steps to that end, required by section 2 of rule 12. The association has unjustly refused to honor such request. I. G. Andrews, at the time plaintiff assigned his certificate as aforesaid, was and still is a member of the association. At such time there was not, nor is there now, any unsettled claims of any kind against plaintiff or Edwards, Wood & Co., or any member thereof, in favor of defendant or any member thereof, nor has any complaint been lodged against plaintiff under section 2 of rule 12 aforesaid, or otherwise. September 4, 1902, E. J. Furlong, Harry Berger and Walter Stern, assuming to act as members of a committee on market reports, filed with the board of directors of the association a paper falsely charging plaintiff, or the firm of Edwards, Wood & Co., with making or reporting false or fictitious purchases or sales in violation of section 10, rule 4, and of having been guilty, on or about July 9, 1902, of dealing in differences on the fluctuations in the market price of a commodity without a bona fide purchase or sale for actual delivery, in violation of said section 27 of rule 4. September 6, 1902, plaintiff received a copy of such paper, with a notice that a hearing on such charges would be had by the board of directors of the association September 25, 1902, at 3 o'clock p. m. Such paper contained the following:

"To the Board of Directors of the Chamber of Commerce of the City of Milwaukee—Gentlemen: The undersigned hereby complains of Lewin A. Wood, a member of the Chamber of Commerce of the City of Milwaukee, and makes the following charges against him:

"First: That the said Lewin A. Wood, or the firm of Edwards, Wood & Co., of which he is a member, was on, about, or prior to July 9, 1902, guilty of making or reporting false or fictitious purchases or sales, in violation of Section 10, of Rule IV of the rules of the Chamber of Commerce of the City of Milwaukee.

"Second: That the said Lewin A. Wood, or the firm of Edwards, Wood & Co., of which he is a member, was on, about, or prior to July 9, 1902, guilty of dealing in differences on the fluctuations in the market price of a commodity without a bona fide purchase or sale for an actual delivery, in violation of Section 27, of Rule IV."

Since the plaintiff assigned his certificate of membership he has, according to custom, regarded his connection with the association as terminated. He challenges the jurisdiction of the board to try him on charges for violating the by-laws of the corporation after assigning his certificate of membership and parting with the ownership thereof. The board of directors of the association are prejudiced against plaintiff, have prejudged the matters upon which they propose to sit as judges, and are incapable of giving plaintiff an impartial trial in respect thereto. Plaintiff and his firm are extensive dealers throughout a large territory. Their reputations as business men are a valuable asset. The threatened trial, if allowed to take place, regardless of the result thereof, will injure the good name of plaintiff and his firm irreparably. When plaintiff assigned his certificate he intended to wholly retire from the association, as its officers well knew. The committee, styling itself a "Committee on Market Reports," that filed the charges, is not recognized by, and is wholly unknown to the corporation charter and its rules and by-laws. All of the acts of the officers of the association and its committee on market reports embarrassing the efforts of plaintiff and his assignee to have the certificate of membership transferred upon the books of the corporation to such assignee, are parts of a scheme to forfeit plaintiff's certificate of membership to the corporation. The directors of defendant, unless restrained by the court, will, on September 25, 1902, at 3 o'clock p. m., in form try and condemn and sentence plaintiff, and forfeit his certificate, thereby causing him irreparable damage.

The decision prayed for is to this effect: First, that the sale and assignment of plaintiff's certificate to E. L. Brown terminated plaintiff's membership in the association; second, that such membership is unimpaired and that plaintiff is entitled to have the same transferred to E. L. Brown or to such other member of said defendant as said Brown or the firm of I. G. Andrews & Co. may direct; third, that defendant and its officers and board of directors have no jurisdiction to try plaintiff upon the charges filed; fourth, that plaintiff is entitled to have defendant and its officers, and each and all of them, enjoined from attempting to exercise any jurisdiction over plaintiff in respect to the charges filed against him, and to a temporary injunction in respect to such matters pending the litigation.

The answer, so far as concerns the question here raised,—in addition to numerous admissions covering the allegations of the complaint as to the membership of plaintiff in the defendant corporation, the by-laws of the corporation, the assignment by plaintiff of his certificate, the conduct of the association in respect thereto, the filing of charges against plaintiff, and his impending trial thereon, and denials on information and belief,—was this in substance: The by-laws of the corporation, in addition to those mentioned in the complaint, that are material to this litigation, include these:

Rule 4, § 1: "All the financial and business concerns of the association shall be managed and conducted (in accordance with the charter and rules of the association) by and under the direction of the board of directors; and no moneys shall be paid except on its vote on each sum proposed to be paid. It shall be the duty of the board of directors to inquire into matters affecting the welfare of the association, or the business in-

terests of the city of Milwaukee, and to report upon the same to the association, together with such recommendations as to rules and regulations, rates of commission and charges, as may be deemed advisable. The board of directors shall, annually, on the second Monday in April of each year, or as soon thereafter as may be practicable, appoint three standing committees, of five members each, to act respectively as supervisors of flour inspection, of grain inspection and weighing, and of inspection of provisions and cooperage, and such other committees, inspectors, gaugers, weighers, measurers, and other officers or servants, not otherwise provided for, as in its opinion may be for the best interests of the association."

Rule 4, § 11: "It shall be the duty of the board of directors, in case of any grave offense, committed by any member of the association against the good name or dignity thereof, shall come to its knowledge, either by public rumor or report, to cause a preliminary or informal investigation to be made by a committee of its members into the truth or falsity of such rumor or report. If such committee, after investigation, shall deem such rumor or report sufficiently well founded, it shall so report to the board of directors, with charges, whereupon the person thus implicated shall be notified in the manner provided in section fourteen (14) of this rule, to appear before the board of directors, and, if found guilty, he shall be censured, suspended or expelled. A majority of a quorum sitting at a regular, special or adjourned meeting of the board of directors, shall be sufficient to censure, but to suspend or expel a member of the association for any offense enumerated in this or the foregoing section, it shall require an affirmative vote of two-thirds of the members present, in which case it shall require at least six affirmative votes to suspend or expel."

The corporation customarily had a standing committee, appointed each year, known as the "Committee of the Board of Directors on Market Reports." For the year commencing the second Monday of April, 1902, the persons who signed the charges filed against plaintiff were members of such committee. In their capacity as members of the corporation and of such committee they filed the charges against plaintiff mentioned in the complaint, in the regular way. The alleged proceedings taken by the corporation and its officers in respect thereto were regular in all respects, being in conformity with the by-laws of the corporation, and for the purpose of giving plaintiff a fair and impartial hearing. About August 26, 1902, a notice was duly posted that application had been made for transfer of plaintiff's membership in the association to Warren E. Stacks. Within the time allowed by the rules of the association therefor objection was duly made to such transfer, pending the investigation of the charges against plaintiff theretofore filed. Upon such objection being made the application was withdrawn and no application was thereafter made for a transfer of such membership. The effect of the pending charges against plaintiff and the objection to the transfer of his membership was to impair such membership and render it nontransferable.

Allegations of the answer on material points were corroborated by affidavits. Some supporting affidavits were also presented on behalf of plaintiff.

Upon the verified complaint a temporary injunctional order was obtained. Upon the pleadings and supporting affidavits such order was set aside, and plaintiff appealed.

James W. Bass (Durment & Moore, of counsel), for appellant. Miller, Noyes & Miller, for respondent.

MARSHALL, J. (after stating the facts). This appeal must turn on whether the complaint states a cause of action. That depends on whether the board of directors of the defendant had jurisdiction under the laws of the corporation to consider the charges filed against appellant. At the outset such jurisdiction was challenged because plaintiff assigned his certificate. It is now conceded that such circumstance did not sever appellant's connection with the corporation nor militate against the power of its board to try him upon charges filed. The material grounds now insisted upon to support the claim of want of jurisdiction will be considered in detail.

1. Do the facts alleged against appellant constitute an offense against the laws of the corporation? It is a sufficient answer to that to say that a court of equity never exercises its jurisdiction to prevent another court or tribunal from exercising its jurisdiction upon the theory that if permitted to do so it will commit jurisdictional error. That is what the action before us seems to have been aimed at. At the outset of the trial of appellant before the board it must necessarily accord to him a hearing on the question of the sufficiency of the charges filed. By his membership in the corporation he is bound by contract, so to speak, to submit that question to the proper corporate tribunal, the same as he is the question of his guilt or innocence. The situation of appellant is unlike that of the plaintiff in Bartlett v. L. Bartlett & Son Co. (Wis.) 93 N. W. 473. There the tribunal of the corporation exercised its jurisdiction to decide upon the matter in hand, but exceeded it by reason of violating the rules of the corporation. If the action had been brought to prevent the trial board from making a decision, upon the ground that if suffered to do so it would go beyond its jurisdiction, manifestly the action could not have been maintained.

2. Are the charges sufficiently specific to comply with the rules of the corporation?

Digitized by Google

That is effectually met by the familiar rule that mere indefiniteness is not a jurisdictional defect. If appellant deems the charges indefinite his remedy is an appeal to the trial board to have them made specific. The board has ample jurisdiction to hear all complaints of that kind, and a court of equity cannot, in advance of its acting at all, assume that when called upon to do so it will either refuse to perform its duty or commit jurisdictional error otherwise. No doubt, as said in Hutchinson v. Lawrence, 67 How. Prac. 38, to which our attention has been called, in every proceeding to discipline a member of a corporation for violating its laws he is entitled to be informed of the charges with sufficient definiteness to enable him to know the precise nature thereof; but the primary tribunal to enforce that right is the one provided by the corporation. Hence, a suit to enjoin it from acting while it has jurisdiction over the subject-matter must be regarded as one to interfere with the exercise of jurisdiction rather than one to avoid the injurious results of jurisdictional error.

3. The point is further made that the conduct called in question did not concern the corporation or any of its members, hence it is not covered by the by-laws; that the corporation has no jurisdiction to try appellant for what he may have done outside of its jurisdiction or with a stranger. The language of the by-laws is general. In its literal sense it covers conduct on the part of members of the corporation regardless of place or of the person concerned therein. That is in strict harmony with the declared purpose of the corporation, to promote just and equitable principles in trade—not merely between the members of the corporation or in its chamber, but generally. Consistent with that, the by-laws were made to require the members of the corporation to observe a proper standard of conduct generally. In no other way could the corporation efficiently "promote just and equitable principles in trade." To allow a person to enjoy its benefits as a member so long as his conduct with its members shall be above reproach, regardless of his conduct with strangers, would tend to promote a low rather than a high standard of business morals. Rules of the character of those under consideration have been commonly held to cover conduct of members of the corporate body outside its local jurisdiction. People ex rel. Thatcher v. New York Com. Ass'n, 18 Abb. Prac. 271, cited by respondent's counsel, is directly in point, and covers the entire field of controversy on this part of appellant's argument. The object of the corporation there, as here, was to "inculcate just and equitable principles of trade." A member was expelled for violating a by-law which was framed in general language. A writ of mandamus was sued out to obtain a reinstatement of the member, the claim being made that the by-law did not cover his case, as the offense charged, if committed, occurred outside the local jurisdiction of the corporation and with a stranger; that to construe the by-law as reaching such a case would call for its condemnation for unreasonableness. The court held that the purpose of the corporation and its by-laws clearly concerned the conduct of its members with strangers as well as with each other; that to hold that the corporation could promote a high standard of business morals by controlling the conduct of its members with themselves and leaving them free to violate its standard of trade ethics in their dealings with strangers would be absurd. The language of the opinion received the approval of the Court of Appeals in Haebler v. N. Y. Produce Exchange, 149 N. Y. 414, 44 N. E. 87, and so fully meets the argument of appellant's counsel here at this point, that we may well give it a place in this opinion:

"If it [the by-law] was obligatory upon him it was binding at all times. He had no right to make a distinction between dealing with members and strangers. He had no right to say: I will inculcate these doctrines while at the association, but I claim the privilege outside of it to be as dishonest as I choose. I will be straightforward and honest in my dealings with one class of persons; but with others I will violate the principles of integrity to which I have subscribed. If such a course of conduct could be tolerated and allowed, then so far as this great object is concerned, the association would be of no account, of no sort of importance. It would only be a shield to cover up dishonesty and fraud outside of its meetings and when its members were engaged in dealing with strangers. Its professions of morality could amount to nothing, and be but an empty name without any substance. In fact, while its ostensible object would be elevated and honorable, it would be but a cloak for those who sought to avail themselves of its privileges to be guilty of evil practices and improper behavior."

4. The further point is made that the board of triers have no jurisdiction to entertain the charges because they were preferred by a member of the board. As suggested by respondent's counsel, that is answered effectually by the fact that the by-laws require the board to examine all charges against any member, reduced to writing and filed by any other member or members with the president or secretary. There is no exception. The members of the board of directors are not precluded by any by-law from filing charges against a brother member, or exempted for any cause from performing their duty as directors to examine into filed charges. That condition of things appellant assented to in joining the corporation, the same as he assented to any other feature of the jurisdiction of the board as laid down in its by-laws. Moreover, as an independent propos-

Digitized by Google

tion, a board exercising mere quasi-judicial powers is not necessarily ousted of its jurisdiction in respect to any particular subject within that jurisdiction because the proceedings before it in that particular matter were instituted by one of its members. This court decided that in State ex rel. Starkweather v. Common Council of Superior, 90 Wis. 612, 64 N. W. 304. There one of the members of the common council filed charges against the mayor, and he and others interested in the result subsequently participated as members of the council in trying him upon such charges. The claim was made, upon common-law writ of certiorari, that the participation of such interested members of the council in the trial was fatal to the judgment rendered. This court held otherwise, because the charter made it the duty of the persons whose conduct was assailed to act as members of the trial body, and made no provision for their exemption upon the ground of prejudice or other cause; that as the Legislature created the office of mayor it had a right to provide any method it might see fit for the removal of an incumbent of the office for cause; that, under the charter, interest of one or more members of the trial body in the result did not go to the jurisdiction of such body. The court did not intend, later, to overrule that in State ex rel. Getchel v. Bradish, 95 Wis. 205, 70 N. W. 172, 37 L. R. A. 289.

We can see no good ground for holding that the complaint shows that the board of directors of respondent has committed jurisdictional error. The cause seems to be wholly grounded upon the idea that if the board is permitted to exercise its jurisdiction appellant will not have a fair hearing. If that were sufficient to warrant a court of equity in controlling the duty constituted tribunals of corporations and preventing them from exercising their jurisdiction, an easy way would exist for removing the trial of offenses against the by-laws of corporations from the jurisdiction of their tribunals to the courts. No such judicial authority exists. The methods provided by the laws of a corporation for disciplining its members, unless void for unreasonableness or violative of some law of the corporation itself, or of the land, are supreme. If the corporation violates its laws in the trial of one of its members, thereby committing jurisdictional error to the injury of the property rights of a member, equity will furnish him a remedy if he has none other.

The order is affirmed.

GAGNIER v. CITY OF FARGO.

(Supreme Court of North Dakota. April 29, 1903.)

TRIAL—INSTRUCTIONS—DAMAGES—PERSONAL INJURIES—APPEAL.

1. In an action against a city for damages for personal injury caused to a person riding on a defective sidewalk on a bicycle, an instruction which may be defective when considered alone will not be held erroneous when the charge considered altogether states the law correctly.

2. In such an action, damages for pain and mental suffering growing out of the physical injury are recoverable without pleading or proving such pain or mental suffering.

3. The insufficiency of the evidence to justify the verdict will not be considered when there is no specification as to the particulars wherein such evidence is insufficient.

4. A specification of error that "the verdict is against the law of the case" means, as applied to the evidence, that the verdict was rendered in disregard of the instructions, and is not a sufficient specification to raise the question of the insufficiency of the evidence to justify the verdict.

(Syllabus by the Court.)

Appeal from District Court, Cass County; Charles A. Pollock, Judge.

Action by N. D. Gagnier against the city of Fargo. Judgment for plaintiff, and defendant appeals. Affirmed.

See 88 N. W. 1030.

M. A. Hildreth, for appellant. David R. Pierce, for respondent.

MORGAN, J. The plaintiff seeks to recover damages claimed to have been received by him while riding on the defendant's sidewalk on a bicycle, which damages are claimed to have been caused by the defendant's negligence in not keeping said sidewalk in proper condition. The complaint states the cause of action, after describing the defects in the sidewalk, in the following language: "That on said 18th day of October, 1899, the plaintiff was lawfully and rightfully riding over and upon said sidewalk on a bicycle, and that when he had arrived at a point in the same where said hole and loose bricks were located as aforesaid, and without fault or negligence on his part, his said bicycle was then and there overturned by a loose brick, and he was precipitated with great violence to the ground, whereby he received great injuries," etc. The defendant's answer was a general denial, with an allegation that the injury was occasioned by the contributory negligence of the plaintiff. The plaintiff recovered a verdict for $400. Defendant gave notice of intention to move for a new trial upon the following grounds: (1) Insufficiency of the evidence to justify the verdict; (2) that the verdict is against the law of the case; (3) errors of law occurring at the trial, and duly excepted to by the defendant. A motion for a new trial was made, based upon a settled statement of the case and upon the grounds stated in the notice of intention. The motion for a new trial was denied, and this appeal from the judgment perfected.

This case was in this court on a former appeal, and is reported in 11 N. D. 73, 88 N. W. 1030. On that appeal this court ordered a new trial because of erroneous instructions given to the jury, and the rule was then fol-

¶ 2. See Damages, vol. 15, Cent. Dig. §§ 441, 446.

Digitized by Google

lowed that a municipality owes no greater duty to riders of bicycles, when allowed to ride on sidewalks than to keep the same in proper condition for safe travel by pedestrians. On this appeal the assignments of error pertain to the instructions given to the jury solely. There is an assignment of error on the refusal of the court to grant a new trial. But the grounds thereof refer solely to the instructions claimed to be erroneous. There is no specification in the record at all as to the particulars wherein the evidence is insufficient to justify the verdict. No request for instructions by the defendant was refused. Hence consideration of the evidence to determine whether it sustains the verdict, or whether the plaintiff was guilty of contributory negligence, or assumed all risks with knowledge of the condition of the walk, is not permitted under the statute; and error can be claimed on the giving of instructions only, as none other are specified or assigned. Section 5467, Rev. Code 1899; Pickert v. Rugg, 1 N. D. 230, 46 N. W. 446; National Cash Register Co. v. Pfister, 5 S. D. 143, 58 N. W. 270.

The first assignment on which appellant relies is in the giving of this instruction: "I charge you, gentlemen of the jury, that prior knowledge of a defect in a sidewalk by one who is injured is not necessarily proof of contributory negligence; and if you believe from the evidence in this case that the plaintiff had knowledge that the sidewalk was out of repair, and even dangerous, yet because of that fact alone he would not, therefore, be bound to forego travel on such sidewalk." The objection to this instruction is stated by the appellant's attorney as follows: "Under the rule laid down in the case of Collins v. Janesville (Wis.) 83 N. W. 695, the instruction practically eliminated from the jury any consideration of the knowledge that the plaintiff possessed with reference to the point of injury, and consequently is destructive of that rule which required the plaintiff to exercise ordinary care to prevent an injury." Immediately preceding and next before the instruction quoted above the court gave this instruction: "You are to consider all the facts, including the condition of the sidewalk, the facts which were within the knowledge of the plaintiff in relation thereto, the character and nature of the defect in the walk which was the direct cause of the injury, the fact that the plaintiff was passing over the walk on a bicycle, and the manner in which he sought to pass, and then determine whether, under all the circumstances, he was in the exercise of such care and prudence as would have been used and exercised by a man of ordinary care and prudence under the same circumstances and conditions." Immediately following the instruction objected to, the court gave this instruction: "The real fact for you to ascertain as bearing upon the question of contributory negligence, if any you so find, is this: Did the plaintiff, by his own fault or negligence, contribute directly to produce the injury? Could he, by ordinary prudence, have prevented the injury? And if you find that he was guilty of contributory negligence, then he cannot recover, and your verdict must be for the defendant." Reading the charge all together, as given, it is clear that the objection urged to the instruction was fully covered in other portions of the charge. The jury was told in plain language that the plaintiff must exercise such care as an ordinarily prudent and careful person would have exercised under like circumstances, which circumstances included plaintiff's knowledge of the condition of the walk at the time. As the only defect claimed against the correctness of the instruction was fully supplied in other portions of the charge, we do not deem it necessary to say anything further on this assignment. It is too well understood to need argument or citation of authorities that an omission in stating the law in a particular instruction is not prejudicial error if covered by other portions of the charge. No prejudice can follow such an omission when supplied elsewhere in the charge.

The next assignment urged arises out of the giving of an instruction as to the elements to be considered in assessing the damages. The jury was instructed to take into consideration the plaintiff's bodily injuries and "his physical pain and mental suffering arising from such injury." The objection urged against the instruction is that mental suffering should not have been included as an element of damage in the case. Appellant's attorney urges that "there is no claim that the plaintiff suffered any mental impairment which injured his mental power." Neither does the complaint allege, nor the evidence show expressly, that the plaintiff suffered mentally, nor that there was any impairment of the mental powers by reason of the injury. The complaint and the evidence show serious physical injury, consisting of breaking two ribs, injuring his arm and shoulder, and other injuries, which were of such character that he was unable to lie in bed, and was compelled to sit in a chair for 170 hours. Such evidence clearly shows physical injuries from which physical pain and mental suffering necessarily follow. Mental suffering is the natural and necessary result of physical injury, and equally as much so as physical pain. The physical injury being proved, pain and mental suffering are presumed. The physical pain and mental suffering need not be pleaded nor specially proved, but are taken to follow as a necessary consequence of the physical injury, and to be inseparably connected therewith. There is great uniformity in the authorities on this question. Among those so holding are the following, which could be added to largely without difficulty: 1 Sutherland on Dam. (2d Ed.) §§ 419–421; Fry et al. v. Hillan (Tex. Civ. App.) 37 S. W. 359; Gronan v. Kukkuck, 59 Iowa, 18, 12 N.

W. 748; C., B. & Q. Ry. v. Warner, 108 Ill. 538; Brown v. Hannibal & St. J. Ry., 99 Mo. 310, 12 S. W. 655; McCoy v. Milwaukee St. Ry. Co., 88 Wis. 56, 59 N. W. 453. Defendant's attorney relies upon Comaskey v. N. P. Ry. Co., 3 N. D. 276, 55 N. W. 732, as supporting his contention. We do not so understand that case. That case lays down the rule that, before damages on account of the "impairment of the mental powers" become allowable, they must be specially pleaded and proven. The syllabus expressly states this as the question decided, and the opinion does not lay down the rule that damages on account of "mental suffering" must be specially pleaded and proven. In that case it was said: "It is conceded that mental suffering is a proper element of damages, and that the impairment of mental faculties is also a proper element when claimed and proven; but it is neither claimed nor proven in this case." We think it clear that the damages that must be "claimed and proven" are expressed in that case as those growing out of the impairment of the mental powers, and not those growing out of mental suffering. The case is not an authority against the doctrine followed by the trial court in this case, that damages growing out of a physical injury causing mental suffering may be recovered without specially pleading or proving the physical pain and mental suffering. As stated in that case, there is a clear distinction between "mental suffering" and "impairment of the mental faculties."

This disposes of all the assignments. The judgment is affirmed. All concur.

On Rehearing.

(October 29, 1903.)

On the reargument appellant's counsel urged that the plaintiff was guilty of contributory negligence as a matter of law, and that it was not necessary for appellant to particularly specify wherein the evidence was insufficient to sustain the verdict, inasmuch as the evidence, considered as a whole, failed to show that the plaintiff was in the exercise of ordinary care in riding over the walk in question under the circumstances disclosed by the evidence. This contention cannot be upheld. As stated before in the opinion, the insufficiency of the evidence to justify the verdict was not particularly pointed out or specified on the motion for a new trial. This not having been specified, the evidence cannot be considered, and the statement alleging that it was insufficient must be disregarded. If insufficient to justify the verdict in any case, the insufficiency must be pointed out and specified, or the trial and appellate courts must disregard the specification. The language of the statute does not admit of excepted cases, but applies to all cases. The insufficiency of the evidence must be specified on the motion for a new trial, or its insufficiency raised by a motion for a directed verdict, before the verdict can be set aside on appeal as based on insufficient evidence. Hence the question is not before us whether the plaintiff was guilty of contributory negligence as a matter of law; nor is the question before us whether the evidence was insufficient to sustain the verdict. Counsel cites many cases holding that an unqualified misdirection in the instructions is ground for a new trial. The contention is not disputed, but it has no application to this case. The cases cited do not hold that an omission to fully state the law bearing on the case in one instruction is prejudicial error providing the omission is fully and clearly supplied in the other instructions given. This is not a case of contradictory instructions. The charge as a whole is not contradictory, but is a correct statement of the law applicable to the case, so far as excepted to.

Finally, it is urged on the reargument that the specification that "the verdict is against the law of the case" is a sufficient specification to warrant this court in setting aside the verdict as not based on sufficient evidence. The specification "against the law," as generally applied in code states, means that the verdict is in disregard of the instructions of the court. The case of Sweeney v. C. P. R. Co., 57 Cal. 15, is especially relied on by counsel to support his contention. In that case the record is silent as to what specifications were made as grounds for a new trial. The trial court granted a new trial on the ground that the verdict was against the law as laid down in the instructions, and also contrary to the uncontradicted evidence. It is not authority for holding that a verdict is "against law" as based on insufficient evidence when no particular specification of the insufficiency of the evidence is made on the motion for a new trial. In Brumagim v. Bradshaw, 39 Cal. 24, this language is used in disposing of a similar specification of error: "It is not enough to aver that the verdict is against law, and then offer to support the averment by showing that the verdict is not supported by the evidence, and is for that reason 'against law.' If such a course of proceeding was tolerated, all the other specific grounds for new trial enumerated in the statute might, for the same reason, be condensed into the one general ground that 'the verdict is against law,' for in that general sense it would be 'against law' if there was any valid reason whatsoever for a new trial." As bearing on the meaning of "against law" in specifications of error, see, also, Declez v. Save, 71 Cal. 552, 12 Pac. 722; Valerius v. Richard, 57 Minn. 443, 59 N. W. 534. The specification that the verdict was "against the law of the case," when considered with reference to the instructions and the evidence does not warrant setting aside the verdict. Before a specification that the verdict is "against law" can be relied on for a new trial based on a consideration of the evidence, it must appear that [illegible] was rendered in disregard of the [illegible] This is not shown in this case.

Digitized by Google

The judgment is affirmed. All concur.

---

2 ND 242 SYKES v. BECK.

(Supreme Court of North Dakota. July 8, 1903.)

PARTIES—SUBSTITUTION—PURCHASE—PENDENTE LITE—APPEAL—DISMISSAL.

1. The equity rule which prohibits a purchaser of the subject-matter of an action pendente lite from further prosecuting the action in the name of the original party has been abolished in this state by section 5234, Rev. Codes 1899, which provides that "no action shall abate * * * by the transfer of any interest therein. * * * and that in case of such transfer, * * * the action shall be continued in the name of the original party, or the court may allow the person to whom the transfer is made to be substituted in the action. * * *"

2. The sole right to ask for a substitution, under the section referred to, rests with the purchaser. He may prosecute the action in the name of the original party, or ask to be substituted, at his option. The allowance of a substitution by the court when requested is discretionary. In case there is no substitution, the statute requires that "the action shall be continued in the name of the original party."

3. A purchaser of the subject-matter of an action after judgment, and before appeal, is a purchaser pendente lite. Section 5739, Rev. Codes 1899, provides that "An action is deemed to be pending * * * until its final determination upon appeal, or until the time for appeal has passed. * * *"

4. A motion to dismiss an appeal which is based upon the ground that the appellant assigned the subject-matter of the action after judgment, and before the appeal was taken, will be denied, where it appears that the appeal was in fact taken and is being prosecuted in this court by the assignee.

5. The fact that a statement of case, settled for the purpose of a review of the entire case in this court in an action tried under section 5630, Rev. Codes 1899, does not contain all of the evidence offered, will not sustain a motion to dismiss an appeal which has been regularly perfected. The sufficiency or insufficiency of the statement merely affects the power of this court to review the evidence.

6. It is *held*, on a motion to strike out the statement of case on the ground that good cause was not shown as a basis for the order of extension of time for settlement, that, upon the showing made, the court did not abuse its discretion in granting the extension.

7. The provisions of chapter 126, p. 256, of the Laws of 1897, so far as they require an assessment of real estate to be made in the name of the owner, are directory, and a failure to assess in the name of the owner does not invalidate the assessment. Following Hertzler v. Cass County (decided at the present term) 96 N. W. 294.

8. While section 5630, Rev. Codes 1899, which governs trials to the court without a jury, requires that all evidence offered shall be received into the record, it does not abolish the rules of evidence, or relieve trial courts from resting their findings upon legal evidence. Under said section this court, upon a review, is required "to disregard all incompetent and irrelevant evidence properly objected to."

9. Oral evidence that certain facts are shown by a written record, the original of which is available, is not the best evidence, and is incompetent.

1898 state tax levies, which were made by fixing a percentage of the aggregate value of the property in the state, as equalized, were, in legal effect, levies of a specific sum. Following Fisher v. Betts (decided at the present term) 96 N. W. 132.

11. Certified copies of official records are essentially secondary in character, and the right to introduce such written copies as primary evidence exists only by virtue of statute, and, to authorize their admission, they must be certified in the manner required by the statute.

12. Section 5700, Rev. Codes 1899, provides that "the certificate must state in substance that the copy is a correct copy of the original or a specified part thereof, as the case may be. * * *" Under this section the authority of the certifying officer is limited to certifying that the copy is a correct copy of an original record, or a specified part of it; and the section does not authorize him to certify that any fact does or does not appear of record, or give him authority to substitute his judgment for that of the court, and certify what the record pertains to.

13. The plaintiff introduced in evidence a paper for the purpose of establishing the invalidity of a county tax levy. There was attached to it the county auditor's certificate "that the above is a true copy of all that pertains to the county tax levy for 1897 as the same appears on record of the county commissioners in my office." It is *held* that an objection that the exhibit was "not the best evidence, and not properly certified," should have been sustained by the trial court, and will be sustained by this court, and the evidence disregarded.

14. The best evidence of the existence or nonexistence of entries in public records is the records themselves. When, because of the voluminous character of the records to be examined, or for other sufficient reasons, oral evidence is admissible to show the absence of a record or an entry, it should ordinarily be given by the legal custodian, and then only after showing a diligent search. As a rule, the oral evidence of another than the custodian is not the best evidence or competent when the testimony of the legal keeper can be had.

15. In this state the settled rule is that the person attacking the validity of taxes and tax sales has the burden of sustaining his attack. The presumption is that a tax is valid, and that presumption continues until overthrown by the party assailing it.

16. In this case plaintiff attacks the validity of taxes upon his lands for the years 1897, 1898, 1899, and 1900, and asks that they be canceled and declared void, alleging as grounds for such relief that the assessments and levies were void. It is *held*, on a trial de novo of the entire case, that plaintiff has failed to sustain the burden of his attack, and the action should be dismissed.

(Syllabus by the Court.)

Appeal from District Court, Stutsman County; S. L. Glaspell, Judge.

Action by Richard Sykes against W. H. Beck. Judgment for plaintiff, and defendant appeals. Reversed.

Marion Conklin and Ball, Watson & Maclay, for appellant. J. E. Robinson and S. E. Ellsworth, for respondent.

YOUNG, C. J. The plaintiff instituted this action in the district court of Stutsman county to determine adverse claims to certain real estate owned by him and situate in that county. The defendant, Beck, purchased all of said lands at the 1898 tax sale for the

Digitized by Google

taxes of 1897, and again at the 1899 sale for the taxes of 1898, and also paid the subsequent taxes thereon for the years 1899 and 1900. The plaintiff alleges "that in said years the said lands were not legally assessed for taxation, and no taxes were legally levied or charged against the same, * * * and that by reason thereof all of said taxes and tax sales are wholly void," and prays "that all of said taxes and tax sales be adjudged void and canceled." The trial court held that there was no valid assessment of any of said lands for taxes for any of the years in question, and further held that the state and county taxes levied for each of said years were invalid, and entered judgment declaring all of said taxes and tax certificates void. Defendant has appealed from the judgment, and demands a review of the entire case in this court, under section 5630, Rev. Codes 1899.

Prior to the argument on the merits, counsel for respondent made two preliminary motions. Both must be denied. The first motion is to dismiss the appeal. The grounds of this motion are (1) that the appellant, Beck, sold and assigned the tax certificates since the entry of judgment in district court, and prior to taking the appeal; and (2) that the statement of case shows affirmatively that it does not contain all the evidence offered at the trial.

The affidavits submitted upon the first ground of the motion to dismiss the appeal show that subsequent to the entry of judgment, and before the appeal was taken, the defendant sold all of said certificates to Daniel M. Robbins, and that the latter had the same assigned to one John Wyman; further, that the written assignment, in terms, authorizes the assignee to prosecute this suit and defend his rights under such certificates, by appeal or otherwise, in the plaintiff's name, or in his own name, at his election, but at his own expense. This appeal was taken in the defendant's name, pursuant to such authority, and is prosecuted by the purchaser of the tax certificates in the name of his assignor, with his consent. The notice of appeal was signed by the attorneys for the assignor, also by the attorneys of the assignee, and both the attorneys for the assignor and the assignee appear in this court. Counsel for respondent contends that as the appeal was taken in the name of the defendant after he had parted with his interest in the tax certificates, which are the subject matter of the action, it was unauthorized and confers no jurisdiction. Counsel relies upon the equity rule which is to the effect that "where a complainant sells his whole right in the suit, or it becomes vested in another by operation of law, whether before or after a decree, if there is to be any further litigation in the case it cannot be carried on in the name of the original complainant by the person who has acquired the right." Mills v. Hoag, 7 Paige, 18, 31 Am. Dec. 271. This rule has been abolished by statute in this state. Section 5234, Rev. Codes 1899, provides that "no action shall abate by the death, marriage or other disability of a party, or by the transfer of any interest therein, if the cause of action survives or continues. In case of death or other disability of a party, the court on motion at any time within one year thereafter, or afterwards on a supplemental complaint, may allow the action to be continued by or against his representatives or successor in interest. In case of any other transfer of interest the action shall be continued in the name of the original party, or the court may allow the person to whom the transfer is made to be substituted in the action. * * *" In this state a transfer after judgment, but before the right of appeal has expired, is a transfer pendente lite, the appeal being regarded as a continuation of the original action. See 2 Enc. Pl. & Pr. 35, and cases cited. Section 5739, Rev. Codes 1899, provides that "an action is deemed to be pending from the time of its commencement until its final determination upon appeal, or until the time for appeal has passed, unless the judgment is sooner satisfied." The right to take and prosecute this appeal in the name of the original defendant is given by that part of section 5234, Id., above quoted, which provides that "in case of any other transfer of interest the action shall be continued in the name of the original party or the court may allow the person to whom the transfer is made to be substituted in the action." This identical provision was a part of section 121 of the Code of 1862 of New York. In Packard v. Wood, 17 Abb. Prac. 318, the court, in construing it, said: "Section 121 has superseded the practice of the late court of chancery in respect to the manner of conducting an action where a change or transfer of interest has occurred since the commencement of the action. As to the former practice, see Sedgwick v. Cleveland, 7 Paige, 287." In Emmet v. Bowers, 23 How. Prac. 300, the court said: "The nominal plaintiff being alive and not subect to any disability, the suit can proceed in his name. Code, § 121. If the transferee does not apply to be substituted as plaintiff, the language of the Code is that 'the action shall continue in the name of the original party.'" Again, referring to this section, in Harris v. Bennett, 6 How. Prac. 220, the court said: "The Code, § 121, directs that in case of a transfer of interest, otherwise than by marriage, death or disability of the party, the action shall be continued in the name of the original party. This is imperative and allows no change, but it adds: 'The court may allow the person to whom the transfer is made to be substituted.' This last is permissive only, and gives a discretion to the court which is intended to be exercised only as the ends of justice may require." It is also well settled that the purchaser pendente lite is the person to mo-

Digitized by Google

for the substitution, and that the order is not to be made as matter of course without imposing conditions. Howard v. Taylor, 11 How. Prac. 380. "It is not obligatory upon the transferee of an interest to make application for his substitution as a party to the action. If he does not, it is continued in the name of the original party." Platt v. McMurray, 63 How. Prac. 149. Hirshfeld v. Bopp, 27 App. Div. 180, 50 N. Y. Supp. 676. In Lawson v. Town of Woodstock, 37 Hun, 352, the court said: "The action may proceed in the name of the original party. That, then, is his privilege, in spite of the transfer. If the assignee desires to come in, he may be substituted; but, if he does not, we think it is not in accord with that section to prevent the original party from proceeding in his own name. The provision that an action must be prosecuted in the name of the party in interest is evidently modified by the section last cited." See, also, McGean v. M. E. R. Co., 133 N. Y. 9, 30 N. E. 647; St. John et al. v. Croel, 10 How. Prac. 253; Boston, W. H. & R. Co. v. Jackson (Sup.) 55 N. Y. Supp. 573. See, also, Barbour on Parties to Actions, 431, 434.

The statute of California is substantially like our own. It has been uniformly held in that state that, when the subject-matter of a pending action is transferred, it is the right of the transferee to prosecute or defend the action either in the name of the original party, or to request a substitution, and, further, that the assignor pendente lite is, after the assignment, divested of further authority to control the action. Walker v. Felt, 54 Cal. 386; Plummer v. Brown, 64 Cal. 429; Stewart v. Spalding, 72 Cal. 264, 13 Pac. 661; California Cent. Ry. Co. v. Hooper, 76 Cal. 404, 18 Pac. 599; Malone v. Big Flat Gravel M. Co., 93 Cal. 384, 28 Pac. 1063; Emerson v. McWhirter, 128 Cal. 268, 60 Pac. 774; O'Neil v. Dougherty, 46 Cal. 576. The assignee has authority to control the action after as well as before judgment, including the right to prosecute an appeal. In O'Neil v. Dougherty, supra, the appellant had been adjudged a bankrupt before his appeal was taken. The Supreme Court overruled a motion to dismiss the appeal, based upon the ground that he was not the real party in interest, and held that under the statute the appeal might be prosecuted in the name of the bankrupt, or in the name of his assignee. Such, in effect, also, was the holding of this court in Anheier v. Signor, 8 N. D. 499, 79 N. W. 983, in which we held that "a party who purchases property from a defendant pendente lite may, with the permission of a court of equity, and under section 5234, Rev. Codes 1899, appear in the case at any stage of the proceedings to defend his interest." In the case just referred to, counsel for respondent moved to dismiss the appeal, basing his motion upon a stipulation of the appellant that it might be dismissed. The motion was resisted by a purchaser from the appellant pendente lite. The motion was denied, and the purchaser was permitted to prosecute the appeal in this court in the name of the assignor. As sustaining the right of purchasers after judgment to take and prosecute an appeal, see, also, Ex parte South & North Alabama Railway, 95 U. S. 221, 24 L. Ed. 355; Roszell v. Roszell (Ind.) 4 N. E. 423; Vail v. Lindsay, 67 Ind. 528; Bowden v. Johnson, 107 U. S. 251, 264, 2 Sup. Ct. 244, 27 L. Ed. 386; Parker v. Taylor (Neb.) 91 N. W. 537; Keough v. McNitt, 7 Minn. 29 (Gil. 15). We are of opinion that the appeal in this case was properly taken, and is properly prosecuted in the name of the original defendant. There has been no application for substitution by the purchaser of the certificates. The case at bar is to be distinguished from cases of disability arising from death or similar causes, as well as from cases in which the original party appeared only in a representative capacity, such as administrator, executor, or guardian, and the representative character has terminated. McCormick Harvesting Machine Co. v. Snedigar, 3 S. D. 625, 54 N. W. 814, cited in support of the motion, belongs to the latter class.

The second ground of the motion to dismiss the appeal, to wit, that the statement of case does not contain all the evidence offered, if true in point of fact, furnishes no ground for dismissing the appeal. It is conceded that the appeal was regularly taken. The objection, if well founded, would only affect the appellant's right to secure a review of the evidence in this court under section 5630, Rev. Codes 1899. Errors assigned upon the judgment roll proper would still be reviewable. The statement is not, however, open to the objection urged against it. Counsel's claim is that he offered in evidence a certified copy of the county tax levy for the year 1900. The record conclusively negatives this contention. The record of his offer is as follows: "The plaintiff now offers in evidence certified copies of the county tax levies for the years 1897, 1898, 1899, and 1900, so far as the same pertain to the land in question, and certified copies of the state tax levy for the years 1897 and 1898, and a certified copy of the resolution pertaining to the publication of the delinquent tax list in 1898, marked Exhibits M to U, inclusive." Each one of the several exhibits referred to as having been identified and offered are contained in the statement. A certified copy of the tax levy for 1900 is not one of them. Counsel doubtless intended to offer a certified copy of the tax list for 1900, but it is clear that he did not do so. Exhibits M to U were the only exhibits identified and included in his offer, and they are in the statement. Counsel also claims "that a certain book, called 'Register of Warrants Issued and Claims Filed,' was offered, and that the

Digitized by Google

same has been omitted from the statement." No such book is contained in the statement. The abstract shows that the defendant's counsel attempted to introduce the book referred to, and that counsel for plaintiff repeatedly objected to its introduction, stating that it must either be read to the court, or a certified copy filed, insisting that "the law provides that certified copies of the book must be offered in evidence, unless it is filed with the clerk." The record shows that counsel for defendant yielded to the objection, and asked leave to file certified copies of the portions of the book he desired to introduce, that leave was granted, and that the certified copies were thereafter filed. In short, the record shows a withdrawal of the offer, and a substitution of certified copies. The motion to dismiss the appeal will be denied.

The second motion is to strike out the statement of case upon the ground that when it was settled the time for settling it had expired, and good cause was not shown for extending the time. This motion must also be denied. Notice of entry of judgment was served on March 13, 1902. Within the 30 days allowed by law for settling the statement, and on April 10th, the defendant obtained an order extending the time for 30 days. On May 10th, thereafter, a second order was obtained, extending the time for 15 days from May 10th. The statement was settled within the last extension. Both orders extending time were made against plaintiff's objection. The orders were based upon the affidavits of Marion Conklin and Oscar J. Seiler, counsel for defendants. The affidavit of Oscar J. Seiler states, among other alleged grounds for the extension, the fact "that there are a large number of exhibits in the case to be copied, and that it requires a great amount of work to prepare such statement of the case. * * *" The affidavit of Marion Conklin is to the same effect. The trial judge had knowledge of the extent of the record, and the amount of labor required to prepare the statement. The record was voluminous, and required much difficult copying. This was known to the trial judge, and is apparent to us from the record filed in this court. The extension allowed, 45 days, was not unreasonable, under the circumstances, and we do not think the trial court abused its discretion in granting the same upon the showing made. It is only in case of an abuse of discretion that such an order will be reversed.

We now turn to the merits. The fact that plaintiff is now the sole owner of the several tracts of land involved, as alleged by him, is not in dispute. Neither is there any controversy over the fact that defendant purchased said land at the tax sales, and paid taxes thereon, as hereinbefore stated. The controverted questions, both of law and fact, upon which the case must be determined in this court, are all embraced in the following findings and conclusions of the trial court:

"(1) That in the years 1897, 1898, and 1899, and 1900, the said property was not assessed for taxation in the name of the owner, and it was not assessed to unknown owners. It was assessed in the name of 'Francis Logie Pirie et al.,' and the said Francis Logie Pirie never had more than an undivided one-third interest in the said lands, and in the said years the record shows that Richard Sykes had an undivided one-third interest in the said lands.

"(2) That in July, 1899, there was in Stutsman county three hundred twenty sections or more of Northern Pacific Railroad lands on which all taxes for the preceding five years remained delinquent; and the said lands had been assessed for taxation in said years on the same basis of valuation as the other lands in Stutsman county, and by resolution of the county commissioners passed in July, 1899, all taxes charged against said Northern Pacific Railroad lands were canceled on the payment of seventy-three per cent. of the original tax, without either penalty or interest, and in that manner the rate of taxation against the said Northern Pacific Railroad lands was reduced to fifty per cent. of the rate charged and levied against the other lands in Stutsman county.

"(3) And the court finds that in the years 1897 and 1898 the state taxes which were levied and charged against the said lands of the plaintiff were levied in mills, and not in specific amounts, as required by section 50 of the revenue laws of 1897 (Sess. Laws, p. 275, c. 126).

"(4) And the court finds that in the years 1897 to 1900, inclusive, the county taxes levied and charged against said lands were not based on an itemized statement of the county expenses for the ensuing year, or on a statement of the outstanding indebtedness of the county. In 1897 the county tax levy was as follows:

"On motion the county auditor was instructed to make a levy for the year 1897 as follows:

County fund	$20.000
Sinking fund	5.000
Road fund	8,000
Bridge fund	5.100

"In the year 1898 the county commissioners passed a resolution fixing the expenditures as a basis for the tax levy, but there was no resolution to levy a tax either in mills or a specific amount. In 1899 the board met, and by resolution fixed the expenditures for that year as a basis for the tax levy, but the board passed no resolution to levy a tax; and the same is true of the year 1900.

"As a conclusion of law, the court finds that in the years 1897 to 1900, inclusive, the said lands were not legally assessed for taxation, and that there was no valid levy of the state and the county taxes charged against said lands, and that all of said taxes, and

Digitized by Google

the sales based thereon, were illegal and void, for the reason that the said lands were not assessed for taxation, and that said taxes were not levied according to law; that the plaintiff is entitled to judgment that all of said taxes and tax sales and tax certificates be canceled, annulled, and adjudged void, and that he recover from W. H. Beck the costs of this action. * * *"

The appellant does not challenge the correctness of the first finding of fact above quoted. His attack is upon the conclusion of law based upon it. The evidence shows that, when the several assessments were made, the lands in question were owned by Francis Logie Pirie, Richard Sykes, and Finley Dun, each having an undivided one-third interest. The assessment in each year was in the name of "Francis Logie Pirie et al." The appellant contends that the failure to assess the lands in the names of the three owners did not render the assessments void, and that the trial court erred in so holding. We agree with this contention. The assessments in question were laid under chapter 126, p. 256, Laws 1897. The validity of an assessment of real estate in the name of one not the owner thereof was involved in the case of Hertzler v. Cass County, 96 N. W. 294, in which the opinion has just been handed down. We held in that case that the provisions of the 1897 act, so far as they require an assessment of real estate to be made in the name of the owner, are for the guidance of the taxing officers, for the purpose of securing system in the tax proceedings; that they are not vital to a valid assessment, and are therefore directory. Sweigle v. Gates, 9 N. D. 538, 84 N. W. 481, is cited by counsel for plaintiff in support of his contention that the assessments are void. The decision in that case turned upon the provisions of the Compiled Laws. The later case of Roberts v. Bank, 8 N. D. 504, 79 N. W. 1049, is also relied upon. The Roberts Case was based upon chapter 132, p. 376, Laws 1890. The statutes upon which both of these cases were based created a personal liability, and authorized personal judgments for real estate taxes. See section 1643, Comp. Laws Dak. 1887, and section 1273, Rev. Codes 1895. Tax proceedings under the 1897 act, under which the assessments here in question were made, are strictly against the land itself, and involve no personal liability. Further, section 81, p. 287, of this act provides that no "sale of real estate for taxes shall be considered invalid on account of the same having been charged in any other name than that of the rightful owner." Following the construction announced in the case of Hertzler v. Cass County, we must hold that the assessments were not invalid because not made in the names of the three owners.

Appellant contends that there is no competent evidence to sustain the second finding, to wit, that the county commissioners canceled five years' taxes on 320 sections or more of Northern Pacific Railroad lands upon payment of 73 per cent. of the original tax. We fully agree with this contention. The evidence shows that the receivers of the railroad company petitioned for a rebate of the taxes, and that the county commissioners passed a resolution authorizing the treasurer to accept payment of 73 per cent., and upon such payment to cancel said taxes. There is no competent evidence, however, that any payments were made or taxes canceled. The evidence offered for that purpose was clearly incompetent. It was furnished by plaintiff's counsel, who testified, over objection, as follows: "I am an attorney at law, and as such I am in the habit of examining records, titles to lands, and tax records, and in this case I have examined the records pertaining to this land, and the tax levies against it for the years in question, and the records pertaining to the cancellation of the taxes for 1895, 1896, 1897, and 1898 against the Northern Pacific Railroad lands in this county, and, on such examination, I find, without exhausting and without going all over the books, I counted 320 sections of Northern Pacific Railroad lands on which the taxes had been canceled, under this resolution of the county commissioners, on payment of 73 per cent. of the original taxes. On the tax lists for those years there is a stamp opposite the description of each tract of land, the words: 'Canceled by resolution of board of county commissioners July 3rd, 1899, on payment of 73 per cent. of the original taxes for the years 1895, 1896, 1897 and 1898.' * * *" A motion was made to strike out all of the foregoing testimony on the ground that it was incompetent, irrelevant, and immaterial. The objection was well taken. The testimony is clearly incompetent, and should have been disregarded by the trial court, and must be disregarded by this court. This case was tried under section 5630, Rev. Codes 1899. That section requires that all evidence offered shall be received into the record. It does not abolish the rules of evidence, however, and it is just as essential as it ever was that findings of fact shall be based on legal evidence. Upon a review in this court of a case tried under said section, the requirement is that "all incompetent and irrelevant evidence properly objected to in the trial court shall be disregarded." This oral testimony relates to the contents of written records. It is not the best evidence, and is incompetent. Oral testimony that certain facts are shown by a record, whether given by the officer in charge of the records or any other party, is not the best evidence of which the case is in its nature susceptible, and therefore not competent. 1 Greenl. Ev. § 82; Bemis v. Becker, 1 Kan. 226; Cooper v. Armstrong, 4 Kan. 30; City of Leavenworth v. Laing, 6 Kan. 274; Manley v. City of Atchison, 9 Kan. 358; Downing v. Haxton, 21 Kan. 178. See 1 Jones on Evi. §§

Digitized by Google

197–199, and cases cited. This testimony must be rejected. There is therefore no legal evidence that any Northern Pacific taxes were paid under the resolution referred to. We do not wish to be understood as intimating that, if legal evidence of payment and cancellation had been offered, it would invalidate the plaintiff's taxes. See section 1242, Rev. Codes 1899.

There is no conflict in the evidence as to the state tax levies for 1897 and 1898 referred to in the third finding of fact. For the purpose of showing their invalidity, plaintiff introduced as an exhibit a certified copy of a portion of the proceedings of the state board of equalization, which is as follows: "August 11th, 1897. Mr. Cowan moved that the state tax levy to defray the expenses of the state for the current year be fixed at three and eight-tenth mills on the dollar of the assessed valuation of all taxable property in the state, as equalized by the state board of equalization, and that the state levy to pay interest on the state debt for the current year be fixed at five-tenths of one mill on the dollar of the assessed valuation of all taxable property in the state as equalized by the state board of equalization. Which motion prevailed." A certified copy of the proceedings for the year 1898 was also introduced, corresponding in all respects to that for 1897, above set out. Counsel for plaintiff contends that the evidence furnished by these exhibits establishes the fact that the levies for both years were not by specific amounts, and are therefore void. Appellant's counsel contend, on the other hand, that the certified copies do not go far enough to show that levies were not in fact made in specific amounts. Their contention is that the action of the board, as shown by the certified copies, was required by statute to be taken by it, and it should not be presumed that the resolution contained in the certified copies represents all the action taken by the board, and that they did not, in fact, make a levy in a specific amount in dollars and cents. It is urged that the resolution adopted was in strict conformity to the duty required of the board after completing the equalization by subdivision 4, § 1225, Id., which provides that, "upon the completion of such equalization and determination of the aggregate valuation of all the property of the state, the said board shall then decide upon the rate of the state tax to be levied for the current year, together with any other general or special state taxes required by law to be levied." And it is urged that it cannot be assumed that the board did not, in fact, literally comply with section 1228, Id., which section, after providing that state taxes shall be levied by the state board of equalization, provides that "such levy shall be made in a specific amount and the rate shall be determined by the state auditor." It will be noted that subdivision 4, § 1225, requires the board to fix the rate of the state taxes. This subdivision was added to the revenue laws by the adoption of chapter 126, p. 256, Laws 1897. The pre-existing statute, requiring the levy to be made in a specific amount (section 1228, supra), was retained. It is not necessary to enter upon a construction of these apparently conflicting provisions, or to pass upon counsel's contention that there is no evidence that the board did not make a levy in a specific amount. We may assume that it did not, and that the only levy made was that set out in the resolution. The board did, however, what was its exact equivalent: It levied a fixed percentage upon a definite aggregate sum. Under the maxim that that is certain which can be made certain, such a levy is in legal effect a levy of a specific sum. We have just held, in the case of Fisher v. Betts, after argument upon rehearing, that the state tax levies for 1889 and 1891, which were made by percentages instead of specific amounts, were valid. The controlling distinction between state levies and county, township, and school district levies is pointed out in that case.

The fourth finding of fact, which relates to the county levies for 1897, 1898, 1899, and 1900, is not supported by the evidence. No evidence whatever was introduced as to the county levy for the year 1900. Counsel for plaintiff attempted to prove that the county levies for the three remaining years, 1897, 1898, and 1899, were void, and, for the purpose of establishing the acts of the board of county commissioners relative thereto, introduced in evidence three separate papers, known as Exhibits M, N, and Q, which exhibits, as appears by the auditor's certificate thereto attached, relate to the tax levies for those years. These exhibits were objected to by counsel for the appellant upon the ground that they were "incompetent, irrelevant, and immaterial, not the best evidence, and not properly certified; that the certificates state conclusions instead of facts." Under the statute under which the case was tried, the exhibits were received into the record notwithstanding the objection, and, although no ruling appears to have been made by the trial court, it is evident that they furnished the foundation upon which the findings as to the county levies are based. The certificates attached to the exhibits are the same in form. That for the year 1897 is as follows: "State of North Dakota, Stutsman County. I hereby certify that the above is a true copy of all that pertains to the county tax levy for 1897 as the same appears on record of the county commissioners in my office. Dated January 8, 1902. L. B. Niemeyer, County Auditor, by G. A. Lieber, Deputy." The objection of appellant's counsel should have been sustained by the trial court, and must be sustained by this court. The copies are not properly certified, and are therefore not admissible.

Digitized by Google

The right to make proof of official records and documents primarily by copy does not exist independent of statute. Such evidence is essentially secondary. The rule and the reasons upon which it is founded are well stated in 1 Wharton on the Law of Evidence, § 60, as follows: "Whenever an original document can be brought into court, secondary evidence of its contents is, as a rule, inadmissible. * * * The policy of the law, independent of other reasons, requires that its original, if practicable, should be produced. For (1) lex scripta manet, while memory as to words is treacherous; and even though not memory, but a written copy, be offered, such copy has between it and the original the possibility of mistake or of falsification. Then, (2) if a party be permitted to hold back the original, when he could produce it, and substitute for it a secondary proof, a door would be opened to fraud. And (3) unless such a rule be inexorably applied, an end would be put to that accurate and thorough presentation of facts which is essential to the administration of justice. If no evidence is to be rejected because it is secondary, a single witness would be sufficient to swear, either primarily or secondarily, either by firsthand or secondhand impressions, to a whole case, documentary and oral. The testimony of a witness in such a case would be a mere conclusion of law, derived from his own notions of facts, with this peculiarity—that the law would be made by himself for the occasion, and the functions of both judge and jury would be dispensed with." The rule of evidence which prohibits the use of copies is superseded by statute in this state, to the extent that proof of certain official records or documents may be made by copies certified by the legal keeper. Subdivision 5, § 5699, Rev. Codes 1899, provides that proof may be made of "acts of a municipal corporation of this state, or of a board or department thereof, by a copy of the official record of such acts, certified by the legal keeper thereof, or by a printed book purporting to be published by the authority of such corporation and to contain a record of such acts." It is patent that, as copies of official records and documents are admissible as primary evidence only by virtue of the statute, they must be certified in the manner required by the statute. The manner of certification is governed by section 5700 Id., which reads as follows: "Whenever a copy of a writing is certified for the purpose of evidence, the certificate must state in substance that the copy is a correct copy of the original, or of a specified part thereof, as the case may be. * * *" Neither of the certificates attached to the papers by which the plaintiff attempts to prove the acts of the board of county commissioners relative to the county tax levies comply with the statute. The certificates do not state, in substance, that they are true copies of the entire record and proceedings of the board of county commissioners, or that they are true copies of any specified part thereof; that is, true copies of the proceedings of any particular meeting or of any particular page or pages of the original record of their proceedings. Each certificate states that the paper to which it is attached "is a true copy of all that pertains to the county tax levy," etc. In other words, the certifying officer, by his certificate, represents that he has passed judgment upon the records of the county commissioners, and has determined what parts of the same relate to the county tax levies, and that he has included in the paper certified by him true copies of all of such parts of the record as he judged pertinent and relevant to the county tax levies. We know of no case where such a certificate has been sustained. The authority of an officer authorized to certify to copies of records and documents is limited to establishing prima facie that the paper which he certifies is a true copy of another writing. When so certified, if the record or document be one which under the statute may be proved by copy, it is admissible in evidence under the statute, but not otherwise. He is not clothed with authority to determine what the record or document relates or pertains to, or to pass judgment upon it in any way. The authorities are unanimous upon this point. In McGuire v. Sayward, 22 Me. 230, the court, in rejecting the certification of an official record as incompetent upon the ground that it was merely the statement of the certifying officer of what appeared in the record, said: "The law does not permit a recording or certifying officer to make his own statement of what he pleases to say appears by the record. What the record itself does declare is to be made known to the court by a duly authenticated copy of it; and upon it, and not upon what the officer may say that it declares, does the law authorize a court of justice to rely. The certificate in this case states the existence of a record; and yet, instead of a duly authenticated copy, there is only a statement of what the officer says will appear by an inspection of it. The law requires that the court before which it is produced should inspect and decide what it contains and proves, and not intrust that duty to a certifying officer." Similar language was used in Doe ex dem. Foute v. McDonald, 27 Miss. 610. The court said: "It is a mere certificate of the register that certain facts appear by the books in his office —a statement of his own conclusions from the facts stated in the books, and not a certified copy of the entry itself from the books." The certifying officer cannot certify that there are no other records, or to the nonexistence of facts. Under a statute of Georgia authorizing the use of certified copies, it was held that "an officer cannot certify to a fact. He can only certify a copy or transcript. His certificate to the nonexistence on his records of certain facts is therefore not

Digitized by Google

tificate to that effect. He must be sworn as any other witness. Martin v. Anderson, 21 Ga. 301; Dillon v. Mattox, 21 Ga. 113; Lamar v. Pearre, 90 Ga. 377, 381, 17 S. E. 92; Walker v. Logan, 75 Ga. 759; Miller v. Reinhart, 18 Ga. 239; Hines v. Johnston, 95 Ga. 644, 23 S. E. 470." Greer v. Fergerson (Ga.) 30 S. E. 943. In English v. Sprague, 33 Me. 440, the court said: "A magistrate, in order to say what a record contains, is not merely to certify what his construction of the record is. He must give a copy of it, that the court may judge of its import. His certificate that it contains any particular fact is never receivable as proof." In Jay v. East Livermore, 56 Me. 107, a paper certified to be a "true extract from the record" was rejected. A similar certificate of a deputy comptroller was condemned in Wood v. Knapp (N. Y.) 2 N. E. 632. The court said: "It is not the province of the deputy comptroller to determine what is or is not material to a question pending in a legal tribunal. He has power to certify to the correctness of copies of papers in the comptroller's office so as to make them evidence, but beyond this his certificate has no more effect than the opinion of any other person." In Hanson v. South Scituate, 115 Mass. 336, a certified copy of records was rejected on the ground that it "was simply a statement of what the certifying officer, under whose hand it was, deemed to be shown by them." The following authorities will be found to fully sustain the rule as stated in the cases already cited, and we know of none to the contrary: Oakes v. Hill, 14 Pick. 442; Robbins v. Townsend, 20 Pick. 345; Wolfe v. Washburn, 6 Cow. 261; Jackson v. Miller, 6 Cow. 752; Childress v. Cutter, 16 Mo. 24; Byers v. Wallace, 87 Tex. 503, 28 S. W. 1056, 29 S. W. 760; Drake v. Merrill, 47 N. C. 368; Goodrich v. Conrad, 24 Iowa, 254; Davis & Co. v. Gray, 17 Ohio St. 331; Adams v. Weight, 14 Wis. 442; Tessmann v. United Friends, 103 Mich. 185, 61 N. W. 261; Owen v. Boyle, 15 Me. 147, 32 Am. Dec. 143; Cooper v. Armstrong, 4 Kan. 30; Bemis v. Becker, 1 Kan. 226; Billingsley v. Hiles, 6 S. D. 445, 61 N. W. 687; 1 Wharton's Law of Evi. §§ 80, 120, 121; 1 Greenl. on Evi. (16th Ed.) § 498; 2 Jones' Law of Evi. §§ 555, 556.

The reason for the rule which prohibits the custodian of public records from including in certified copies only such portions of the record as, in his opinion, are pertinent to a particular official act or fact, is, of course, that the relevancy of the parts of the record is for the court to determine. To hold otherwise would be to substitute the judgment of the certifying officer for that of the judicial tribunal in which the fact in controversy is to be determined. The danger of any other rule is well illustrated by this case. The trial court, as will be noticed by reference to the fourth finding of found that in was not based upon an itemized statement of county expenses for the ensuing year, or a statement of the outstanding indebtedness of the county, and was therefore void. Now, the only evidence offered to show that a statement of expenses and a statement of indebtedness was not made as required by law is the fact that no such statements appear in the certified copy offered in evidence, coupled with the auditor's certificate that the copy contains all that pertains to the county tax levy for 1897, and the oral testimony of plaintiff's counsel hereafter referred to. It is fair to assume that the absence of the statements from the certified copy controlled the trial court in its finding that the levy, which is complete in itself, was not based upon a statement of expenses and indebtedness. Accepting the copies as properly certified, the trial judge necessarily concluded, that if statements had been made, they would be in the copy, inasmuch as the certifying officer certified that it contained all that pertained to the county tax levy. In making the certificate the auditor merely expressed his opinion as to what pertains to a county tax levy. The fact is the county tax levy was complete in itself, as will appear by reference to the finding. If the levy is invalid, it is not because of the form in which it was made, but simply because of the failure of the board to perform an anterior act, namely, the preparation of the statements. But the statements are no part of the levy. This was made clear by Bartholomew, J., in Shuttuck v. Smith, 6 N. D. 71, 69 N. W. 5, 10, in which he said: "While the levy must be based upon the itemized statement, such statement is no part of the levy. The two things are entirely distinct. They need not be made at the same sitting, or at the same session. The only part of the commissioners' record here introduced pertains to one sitting, and to the levy proper. I find nothing to negative the idea that a complete and technical itemized statement of county expenses for the ensuing fiscal year may not be found elsewhere in their records." Possibly the county auditor, in making these copies, was also of opinion that a copy of the record of the county tax levy would not properly include copies of the statements, and therefore did not include them. At any rate, the copy is no more than the opinion of the certifying officer. It hardly need be said that the judgment of the county auditor cannot be substituted for that of the court. The copies were not certified as required by law. The exhibits must be rejected and the testimony disregarded. There is, then, no proof whatever tending to show the invalidity of the county tax levies for the several years in question. It is proper to say that in case the certificates showed that the copies were true copies of a specified part of the commissioners' record, or all of it, properly

Digitized by Google

identifying the part of the original record copied, the exhibits would be admissible, and would not be rejected merely because the certifying officer had, after making a proper certificate, expressed his opinion as to what the record related to, and as to what facts did or did not appear in the record. As, for example, had the auditor certified that the copy was a true copy of pages 27 and 28 of the record, Book A of the County Commissioners' Record of Stutsman County for the year 1897, or by other suitable description, and then added a statement of his opinion as to the subject that the record related to, and that there was no other record or matter relating to that subject, in that event the extraneous recitals in the certificate would be suppressed, and the contents of the exhibit received as a true copy of the original record. But that is not this case. These certificates identify no part of the original record by book, page, or otherwise. The auditor merely certifies that the papers are true copies "of all that pertains to" the county levies. If, however, it were conceded that these copies are so certified that they may be properly admitted in evidence as proof of any part of the commissioners' proceedings, yet their admission would not avail the plaintiff, for the reason that after rejecting the opinion of the auditor as to what they pertain to, and his opinion that they contain all that relates to the county tax levies, there is no competent evidence that the records of the board do not elsewhere show a literal compliance with the statute. See Shuttuck v. Smith, supra.

The oral evidence of plaintiff's counsel as to the contents of the records of the county commissioners is equally objectionable. He testified, over objection, as follows: "I have carefully examined the records of the county commissioners pertaining to the levy of taxes in the years 1897, 1898, 1899, and 1900, and that those records do not contain anything in their matter pertaining to the levy of taxes in these years, except so far as the same appears from the certified copies of the tax levies which have been offered in evidence. The records do not contain anything to show that the county tax levies in those years were based on an itemized statement or estimate of county expenses, or on a general statement of outstanding indebtedness of the county in those years, except so far as the same appears from the certified copies put in evidence." Defendant's counsel moved to strike out all the above evidence "in regard to the record of the county commissioners on the ground that the same is incompetent, irrelevant, immaterial, and not the best evidence." The objection was well taken, and the evidence must be disregarded in this court. The evidence was objectionable on the ground that it was not the best evidence; that is, it is not the kind of evidence required to prove that facts which are required to be officially recorded do or do not exist. The witness was not the official custodian of the records. The records themselves are the best evidence both of what they do and what they do not contain. As we have seen, it was not competent for plaintiff's counsel to testify to what they contain, and it was equally incompetent for him to testify to what they do not contain. The rule stated in 2 Jones' Law of Evidence, § 556, is that where "it is necessary to prove facts collateral to the record, or that no document of a public character exists or is on file, or similar facts, the proper mode is not by statements in official certificates, but by the testimony of the officer." The rule which requires that proof of the absence of a record entry or document shall be furnished by introducing the record itself, or by the oral testimony of the custodian, is founded upon reasons of public policy, which require that the best evidence reasonably available to prove the fact shall be produced. The records themselves are, of course, the best evidence, and were available in this case. If they do not in fact contain the record of the proceedings which are essential to the validity of the tax sales, that fact could be made certain by a production of the records themselves. Where the records are of such a voluminous character (or other sufficient reason exists) that oral testimony is admissible to show the absence of any particular record or entry, it must ordinarily be given by the custodian or keeper of the records, and not by a stranger; and then only after a diligent examination is shown to have been made. The rule quoted from Jones' Law of Evidence appeals to us as sound, and it has the support of judicial opinion. In Bullock v. Wallingford, 55 N. H. 619, the court said: "When a party desires to prove the negative fact that there is no record, he must do so in the usual way—by the deposition of the proper officer, or by producing him in court so that he may be sworn and cross-examined as to the thoroughness of the search made." Stoner v. Ellis, 6 Ind. 152, is to the same effect, and sustains the rule that proof of the absence of a record is to be made by the custodian's testimony "that upon diligent search the fact did not appear." See, also, Burton v. Driggs, 20 Wall. 125, 22 L. Ed. 299; and Smith v. Richards, 29 Conn. 232.

The plaintiff has wholly failed to show the invalidity of the county or state tax levies, as well as the invalidity of the assessments. In this state it is the settled rule that the person attacking the validity of a tax or a tax sale must sustain the burden of his attack, or fail in his action. The presumption is that the tax is valid. In Farrington v. Investment Company, 1 N. D. 102, 45 N. W. 193, the court used this language: "Respondent attacks the validity of the tax, and the burden is upon him to establish its invalidity; and it is not enough, for the purposes of this case, that the court cannot be

Digitized by Google

valid, and this presumption necessarily extends to every act upon which the tax in any measure depends. The court must be able, upon the evidence, to pronounce judgment against its validity." Shuttuck v. Smith, 6 N. D. 71. The rule established by the cases referred to is reinforced by section 78, c. 126, p. 286, Laws 1897. The result in this case does not involve a miscarriage of justice. Plaintiff is merely required to bear his share of the public burden.

The district court will reverse its judgment and enter judgment dismissing the action. All concur.

SUDDITH v. INCORPORATED CITY OF BOONE.

(Supreme Court of Iowa. Oct. 13, 1903.)

ASSIGNMENT OF ERROR — NUISANCE — EVIDENCE — EFFECT OF GASES — CONCLUSIONS —ORDER CONTINUING DECISION.

1. An assignment of error that the court erred in overruling defendant's objections to evidence in each and every instance appearing of record is insufficient.

2. Nonexpert witnesses in an action for a nuisance from the discharge of a sewer may state that the smell of gases from the sewer's outlet made them sick.

3. On the question whether the discharge from a sewer constituted a nuisance it may be shown that the sewer had no artificial ventilators or deodorizing appliances, so that all the odors were carried to the outlet.

4. In an action for a nuisance from the discharge of a sewer a witness may not testify whether filter beds would be of any benefit to plaintiff, this being a question for the jury.

5. An order in an action for damages for a nuisance, and to abate it, continuing decision on demand for an injunction for purpose of enabling defendant to remedy the nuisance, is not an order of abatement, and is not appealable.

Appeal from District Court, Boone County; S. M. Weaver, Judge.

Action at law to recover damages for nuisance and to abate the same. Trial to a jury. Verdict and judgment for plaintiff, and defendant appeals. Affirmed.

D. G. Baker, for appellant. Ganoe & Hollingsworth, for appellee.

DEEMER, J. Plaintiff was in the possession of and claims to own or have a lease for certain lands at or near the city of Boone, through which runs a small stream known as "Honey Creek." Before plaintiff obtained his right to the land, the defendant had constructed a sewer system, which had its outlet into Honey creek, and into which it discharged the sewage of the city. Plaintiff claims that defendant thus befouled the stream, and caused noxious and offensive smell to arise about his property, polluted ing his house unfit for habitation, endangering the life of himself and family, and causing them to be sick. The defendant pleaded, among other things, that plaintiff knew of the condition of affairs before he moved upon the property; that the sewer system was permanent in character, was constructed in the year 1895, and is now in the same condition as when erected, and that plaintiff's action is barred. It also pleaded that Honey creek was the only natural outlet for its sewer system, and denied all negligence in the construction of the system or in the operation thereof. It further pleaded that the damages to plaintiff, if any, were caused by other things than the discharge of sewage; and that, on account of the location of the land, it was and is of little value, and that whatever damages plaintiff suffered was due to his own fault and neglect. On these issues the case was tried to a jury, resulting in a verdict for plaintiff in the sum of $175. Judgment was rendered on the verdict, and the court also made the following order: "Decision on plaintiff's demand for an injunction continued until the April, 1902, term of this court, for the purpose of enabling defendant to remedy the nuisance complained of." No further order seems to have been made on the application for an injunction, nor does it appear what, if anything, was done by the city toward abating the nuisance.

While something like 21 errors are assigned, few, if any, of them are sufficient to raise any question for our consideration. Those relating to instructions given and refused, to the ruling on defendant's motion for a directed verdict, and on its motion for a new trial are omnibus in character, and clearly insufficient to demand attention at our hands. Huss v. R. R. Co., 113 Iowa, 343, 85 N. W. 627; Fitch v. Traction Co. (Iowa) 89 N. W. 33; and cases cited under section 4136 of the Code. The same may be said of assignments such as this: "The court erred in overruling defendant's objections to evidence in each and every instance appearing of record," etc. Dairy v. R. R., 113 Iowa, 716, 84 N. W. 688. Giving to defendant the benefit of every doubt regarding the sufficiency of its assignments of error, we proceed to a discussion of such as are argued. Witnesses were permitted over defendant's objection to state that the smell of gases from the outlet of the sewer made them sick. The ruling is said to be erroneous, because the question called for the opinions and conclusions of the witnesses. One of the witnesses was plaintiff's wife, and it was certainly material to show by competent evidence that the alleged nuisance affected her health. We think the evidence given by these witnesses was both competent and material. The observation of a witness as to ordinary causes and effects is a fact [illegible] given to a

---

¶ 1. See Appeal and Error, vol. 3, Cent. Dig. § 3023.

Digitized by Google

arising from the sewage was one of the material points in the case, and we think an ordinary witness may state not only the nature of these odors, but their effects as observed by him. Parker v. Boston Co., 109 Mass. 449; Elliott v. Van Buren, 33 Mich. 49, 20 Am. Rep. 668. How many times witnesses were made sick by these offensive smells was, of course, immaterial; but that they were in fact made sick was material.

Witnesses were permitted to testify, over defendant's objection, that the sewer system had no septic tanks or deodorizing basins, and that it had no artificial ventilators or shafts. While it is true that plaintiff struck from his petition all claim that the system was not properly constructed, yet we think this evidence was material and relevant to the issues, in that it tended to show the character of the sewage which was emptied into the creek, and that all the odors were carried down to the outlet, and there set loose to contaminate the atmosphere. A witness for defendant was asked whether or not filter beds would be of any particular benefit to plaintiff. Objection to the question was sustained, and, we think, properly so, for the reason that that was a question for the jury. The general effect of filter beds for such a system might, perhaps, have been a proper matter of inquiry, but their effect upon plaintiff was purely a question for the jury. The distinction between the two questions is manifest. A jury must be given something to do, and, as a rule, a witness cannot substitute his judgment for that of a jury. Moreover, under the instructions given by the court, which must be accepted as the law of the case, defendant could not show in defense that septic beds or bacteria tanks would not remedy the nuisance; hence the error in refusing this evidence, if there was error, was without prejudice.

The same witness to whom these interrogatories were propounded testified that deodorizing of sewage is practicable, but would cost some money. He also fully testified regarding bacteria and filter beds, and there was no prejudice in any of the rulings complained of by defendant. Defendant offered to show that it had no funds with which to make the plant innocuous or inodorous, but was not permitted to do so. Its counsel now say that such evidence was not admissible on the question of damages, but that it should have been received on the question of abating the nuisance; and this brings us to the last matter complained of, which is the entry made by the court in its judgment regarding the abatement of the nuisance. Referring back to that entry, it will be seen that the court in effect made no order save to continue the application for the injunction until the next term of court. True, it says it did so for the purpose of enabling defendant to remedy sance. It took its chances on doing so, and at the time to which the cause was continued it might present any material evidence it had on the question of abating the nuisance. It does not appear that anything has been done under this order by way of issuing an injunction, nor is any showing made as to what defendant has done or has been able to do to remedy the nuisance. It will be time enough to complain when the injurious order is made. An order for a continuance is not such a one as may be appealed from, and it is clear that no appeal will lie from the reasons given by a court for making an order for a continuance. There is nothing to show that defendant has been enjoined from operating its plant, or that it has in fact been ordered to abate the nuisance. This answers appellant's argument with reference to the admission of the testimony last referred to, and also covers the validity of the entry quoted.

Counsel submits a lengthy argument on the question of the right of a court to abate such a nuisance as is here complained of. but, for reasons already stated, we cannot consider that feature of the case.

Having now discussed all matters presented by proper assignments of error, which have been argued by counsel, and, finding no prejudicial error, it follows that the judgment is right, and it is affirmed.

WEAVER, J., taking no part.

BAY v. MONROE COUNTY.

(Supreme Court of Iowa. Oct. 15, 1903.)

PLEADING—AMENDMENT DURING TRIAL.

1. In an action against a county for services rendered by a physician, the evidence showing conclusively the contract by the board of trustees, and the rendition of the services for the precise time claimed, and there being nothing to show bad faith, there is no abuse of discretion in refusing an amendment of the answer, to the effect that the certification of the account by the trustees had not been properly made.

Appeal from District Court, Appanoose County; T. M. Fee, Judge.

Located in Pleasant township, Monroe county, is the village of Coalfield, containing a population of about 200 people, mostly colored, whose chief industry is that of mining coal. In December, 1899, smallpox broke out, and on the 14th of that month plaintiff was employed by the board of health of the township to vaccinate all unable to pay therefor themselves. Later he was employed by the board to treat impecunious patients suffering from the disease at the price of $25 per day, beginning December 19th. This was reduced to $20 per day January 22, 1900. He presented his bill to the board of

¶ 1. See Pleading, vol. 39, Cent. Dig. §§ 773, 798.

Digitized by Google

supervisors for necessary expenses in vaccinating $6, and 3 days' service therein, at $25 per day, and also for $990 owing for the 41 days' service in treating the indigent, all of which appeared to have been duly certified by the members of the board of health. But $37.50 on the first two items and $410 on the remaining were allowed. Thereupon this action was begun, and on trial $69.09 was recovered on the first items, and $826.87 on the last. The defendant appeals. Affirmed.

F. D. Everett, Co. Atty., J. C. Mabry, and T. B. Perry, for appellant. McNett & Tisdale and H. E. Valentine, for appellee.

LADD, J. The propriety of the allowance for vaccination and the expenses incident thereto is not questioned. The answer first filed concedes that plaintiff rendered services for the time claimed, but pleads an allowance of $10 per day, and the tender of a warrant for that amount, alleging this the full value of the services rendered. In an amendment to the answer, it is further alleged that the price agreed upon was excessive, and that the reasonable value of plaintiff's services was no more than $10 per day; that he failed to enter the houses in visiting the patients, and give them proper treatment, but, on the contrary, remained "on the outside, at the window, where he might look through the glass darkly, and view his patient at a distance, and would send inside a more stout-hearted messenger to interview the patient, who would then communicate the results;" that the county is liable for no more than the reasonable value of the services rendered, and this it had tendered. Issues were also raised as to whether the trustees were in session as a board when they employed plaintiff, and also as to whether another physician had been employed; but these were settled conclusively against the defendant.

After all the evidence had been introduced, the defendant filed another amendment, first denying the averments of the reply, and, secondly, averring that the certificates of the trustees to the accounts had been made by them separately at Albia, outside of Pleasant township, and not as a board of health, and that in giving them they acted in bad faith, and with knowledge that the services contracted for had not been rendered. This amendment was stricken, because raising new issues, and coming too late. In this there was no abuse of discretion. The evidence had shown conclusively the contract by the board of trustees, and the rendition of services for the precise time claimed. This being true, justice could not have been promoted by going into the inquiry as to whether the board of health had properly certified the account.

The record is also barren of any evidence of bad faith on the part of the trustees. It is said that the fact that they certified that the services contemplated were rendered furnished such proof. About 60 cases were treated, and all recovered. Ordinarily, the object in employing a physician is to effect a cure. This seems to have been the peculiar notion of the plaintiff, and, even though he did ascertain the condition of his patients by looking at their tongues through windows or the open door, and by inquiry of them and the attending nurses, he must have prescribed suitable remedies; at least there is nothing in the record to the contrary. Conceding that the treatment should be symptomatic, it does not appear that plaintiff's was not. Some evidence was introduced to the effect that by the usages of the medical profession a physician should always enter the house, feel the patient's pulse, take his temperature, look at the tongue and into his throat, and ascertain whether he suffers pain in the chest or back. This may be, and the evidence shows that plaintiff gave a personal examination whenever he deemed it essential. If he failed, through the methods employed by him, to properly diagnose any case, the record does not show it. Every patient recovered in the usual time, and, so far as appears, the spread of the disease was stayed as soon as could be anticipated. What more ought the county demand of the trustees or their physician? Certainly the certification of the trustees under these circumstances furnished no proof of bad faith on their part. There was no occasion, then, for permitting the amendment, as in any event there was no evidence of bad faith on the part of the trustees. See Tweedy v. Freemont Co., 99 Iowa, 721, 68 N. W. 921; Taylor v. Woodbury County, 106 Iowa, 502, 76 N. W. 824.

Alleged defects in the instructions and errors in rulings on the admissibility of evidence demand no attention, as in any event plaintiff was entitled to recover the amount claimed.

Affirmed.

HYATT v. HAMILTON COUNTY.

(Supreme Court of Iowa. Oct. 15, 1903.)

ATTORNEY—DISBARMENT PROCEEDINGS—COMPENSATION FOR ATTORNEY PROSECUTING—LIABILITY OF COUNTY.

1. Under Code, § 325, providing that proceedings to remove an attorney may be commenced by direction of the court, who must direct some attorney to draw up the accusation, an attorney appointed to prosecute disbarment proceedings may recover from the county a reasonable compensation for his services, though there is no statutory provision for compensation.

Appeal from District Court, Hamilton County; S. M. Weaver, Judge.

Action by plaintiff, as executrix of the estate of her husband, M. B. Hyatt, deceased, to recover compensation for services rendered by deceased, on the appointment of the district judge, in proceedings to disbar cer-

Digitized by Google

tain attorneys. Defendant demurred to plaintiff's petition, and, when overruled, defendant stood upon his demurrer, and judgment was entered for the plaintiff, from which judgment defendant appeals. On presentation of the appeal to this court, the judgment of the district was reversed (90 N. W. 508), but subsequently a rehearing was granted, and the case is again submitted on additional arguments. Affirmed.

J. M. Blake, Co. Atty., and A. N. Boeye, for appellant. D. C. Chase, for appellee.

McCLAIN, J. The simple question involved in this appeal is whether the lower court erred in holding that, notwithstanding there is no statutory provision for compensation to an attorney appointed by the court to prosecute disbarment proceedings under the provisions of Code, § 325, such attorney is entitled to compensation. The theory of the appellant seems to be that the attorney thus appointed is an officer of the court, and, like other public officers, is entitled only to such compensation as is provided for by statute, and that the county cannot be rendered liable for any expenses in conducting the court, unless such liability is expressly declared by statute. But with these contentions we cannot agree. It is true that the attorney is in some sense an officer of the court. But he is certainly not a public officer. As incident to the privilege of practicing in the courts, he may be required to discharge certain duties imposed upon him by statute. Thus he may be required to defend a criminal. But we know of no obligation imposed upon him by statute to give his services to the public without compensation. It was held by this court, before there was any statutory compensation to counsel appointed to defend one accused of crime who was without means to employ counsel, that, while the person appointed by the court for the purpose was under obligation to render his services, there was a corresponding obligation on the part of the county to pay him a reasonable compensation therefor. Hall v. Washington County, 2 G. Greene, 473. That case overruled Whicher v. Cedar County, 1 G. Greene, 217, in which the court had held that compensation was discretionary in such cases with the county. Likewise, in White v. Polk County, 17 Iowa, 413, it was held by the two judges who favored affirmance that one appointed by the court to act as special prosecutor in criminal cases in the absence of the district attorney was entitled to reasonable compensation from the county for his services, although no compensation in such cases was provided for by law. The difference of opinion among the judges of the court in that case was not on the general proposition of implied liability, but on the question whether the prosecuting attorney was to be considered a state or a county officer, it being contended by the two judges who favored reversal that as the prosecuting attorney, under the law as it then existed, was not selected as a county officer, but was elected for a district composed in most cases of several counties, and was paid out of the state treasury, like district judges, he could not be considered in any sense as the representative of the county. The right of an attorney who is required to perform a service for the public to have compensation therefor has been sustained in other states. See Carpenter v. Dane County, 9 Wis. 274; Dane County v. Smith, 13 Wis. 585, 80 Am. Dec. 754; Webb v. Bird, 6 Ind. 13. The contrary conclusion was reached in Wayne County v. Waller, 90 Pa. 99, 35 Am. Rep. 636; Rowe v. Yuba County, 17 Cal. 61; Vise v. Hamilton County, 19 Ill. 78. The cases of Morton v. Watson, 60 Neb. 672, 84 N. W. 91, and In re Eaton, 7 N. D. 269, 74 N. W. 870, relate to taxation of costs in disbarment proceedings, and, we think, have no direct bearing on the question now before us. The argument by analogy from cases in which this court has held that an officer required by law to perform duties for which no special compensation is provided is not entitled to recover under an implied contract has, as it seems to us, no bearing whatever on the question. In Foster v. Clinton County, 51 Iowa, 541, 2 N. W. 207, it was held that an attorney appointed by a peace officer to prosecute an action for violation of the prohibitory liquor law was not entitled to recover compensation from the county for his services, for the reason that no authority for such appointment was found in the statute. In Turner v. Woodbury County, 57 Iowa, 441, 10 N. W. 827, it was held that township trustees, having authority to designate the place where an election should be held, could not render the county liable to make compensation to a private owner for the use of a place thus designated, the reason of the holding being that there was no duty on the part of the county to pay expenses for the purposes of an election otherwise than as provided by law. In Howland v. Wright County, 82 Iowa, 164, 47 N. W. 1086, it was held that the mayor of a town, rendering services as a magistrate, was not, in the absence of any provision therefor, entitled to recover from the county for the value of his services, the reason given being that a public officer is entitled only to such compensation as the law provides; and the same reasoning was applied in Guanella v. Pottawattamie County, 84 Iowa, 36, 50 N. W. 217, to the claim of a city marshal against the county for fees in criminal cases. In Mousseau v. Sioux City, 113 Iowa, 246, 84 N. W. 1027, it was held that a special policeman, appointed to serve at a general election, could not recover for his services from the city or county in the absence of statutory provision therefor, the reason stated being that "no recovery for services rendered by public officers may be had unless compensation is directed by stat-

Digitized by Google

ute. * * * The state is not bound to provide for such payment, and he who takes employment under its agency accepts with the honors the burden also." There are no decisions of this court subsequent to that announced in Hall v. Washington County, supra, indicating dissatisfaction with the reason of that case, and we are satisfied to follow it. The analogy between that case and the one now before us is plain. In that case the duty imposed upon the attorney by appointment of the court, under authority of statute, was to defend a criminal. In this case the duty imposed upon the attorney by order of court, in pursuance of statutory authority, was to act in the prosecution of a special proceeding, in the interest of the public, to disbar attorneys charged with misconduct. The disbarment of persons who have been admitted to the practice of law, but have by misconduct forfeited the right to pursue the profession, is as much a matter of public concern as the defense of those who are charged with crime. A disbarment proceeding is not primarily in the interest of members of the legal profession, but in the interest of those who, desiring to have the services of an attorney, may be misled to their injury, or defrauded, in employing a disqualified or dishonest attorney, by reason of the action of the state in admitting him to practice, and thereby impliedly indorsing him as one to whom legal business may properly be intrusted. When the state undertakes to regulate the admission of attorneys to practice in the courts, it thereby assumes a duty to see to it that unworthy and incompetent persons are not held out to the public by its indorsement as qualified to transact legal business. Other members of the profession, feeling a justifiable pride in the reputation and standing of the profession, may realize more acutely, perhaps, than do the members of the public in general, the danger to the public, and the disgrace to the other members of the profession, involved in allowing improper persons to hold themselves out as authorized by the state to practice. But the statutory provisions as to disbarment are not, apparently, provided for in any way as a protection to other lawyers; and we see no reason why an attorney, required by the court to discharge the duty of assisting in taking away from a brother attorney, who is unworthy of the trust imposed in him, the right to further recognition by public authority as an attorney, should render such services at his own expense.

One further suggestion, perhaps, may be made with reference to the liability of the county. It is true that disbarment proceedings are not instituted by the county, and are not directly in its interest, as a quasi municipal corporation. But one of the duties imposed upon a county, as a branch of the government of the state, is to maintain and pay the expenses of a court for the administration of justice. Whatever expense is incident to the maintenance of such court is to be met by the county. The special provision of Code, § 226, that, "where terms are held in any city or town, not the county seat, such city or town shall provide and furnish the necessary rooms and places for such terms, free of charge to the county," implies the liability of the county for the expenses of the court as usually held at the county seat. There is no special provision for supplying the necessary furniture for the courtroom, and yet there is no reasonable doubt, we suppose, as to the authority of the court to require the county in some proper way to bear the expense of the reasonable accommodations to enable the court to transact its business. So it is the duty of the court, in the discharge of its judicial functions, to entertain proceedings for the disbarment of an attorney, and whatever necessary expense is involved in the prosecution of such a proceeding must inevitably fall upon the county. It appears to us that there can be no escape from the conclusion that the county may be liable by implication for some expenses not directly specified by statute.

Without further elaboration, we hold that a reasonable compensation of an attorney appointed by the court to act for the public in the prosecution of disbarment proceedings is a charge upon the county, and that the action of the lower court in overruling defendant's demurrer to the petition in the present case should be affirmed.

WEAVER, J., taking no part.

CUMMINGS v. LYNN.

(Supreme Court of Iowa. Oct. 16, 1903.)

WORK AND LABOR—CLAIMS FOR SERVICES—PAYMENT — ADMINISTRATORS — APPOINTMENT—TIME—APPLICATION—INSUFFICIENCY—INVALIDITY OF PROCEEDINGS.

1. Under Code, § 3305, providing that administration will not be originally granted after five years from the death of the decedent, an application for the appointment of an administrator more than five years after decedent's death, which failed to show that the applicant had any interest in the estate either as an heir or a creditor, and alleging that deceased left no personal property, but that the object of the application was to complete the title to real estate left by deceased, which was untrue, was insufficient to justify an order appointing an administrator.

2. Where letters of administration were not granted within five years after decedent's death, as required by Code, § 3305, a mere stranger cannot intervene after such period, and, by procuring administration, subject realty which has passed to heirs to the payment of her debt.

3. Where an administrator was appointed without a proper showing, the entire proceeding was void.

4. Claimant was employed by decedent on July 3, 1893, and he died October 4, 1894. During this period claimant was to receive not to exceed $1.75 per week. In a book kept by deceased, found after his death, were several tries in claimant's own handwriting to t'

Digitized by Google

fect that she had been "paid to October, 1893," and on another page was an entry in the same handwriting showing payment "to May, 1895," claimant having continued the work for decedent's wife after his death. *Held* that, in the absence of any evidence to explain such entries, they were sufficient to establish payment for claimant's services.

Appeal from District Court, Hardin County; W. S. Kenyon, Judge.

On April 4, 1900, Martha J. Lynn filed her application for appointment as administratrix of the estate of William Dilts, in which she alleged he was a resident of the county, died intestate October 3, 1894, left no personal property save what passed into the hands of his widow, and that the object of the application was to complete the title to certain real estate left by him. Letters of administration issued to her, and statutory notice was published. On August 6, 1900, Cora Cummings filed her claim of $689 for balance due from deceased for services rendered him from July 3, 1893, to March 25, 1900. Jury was waived, and, after hearing the evidence, the court allowed claimant the sum of $100. Reversed.

Albrook & Lundy, for appellant. John Porter and W. J. Moir, for appellee.

LADD, J. The application for appointment as administratrix was made more than five years after the death of decedent. It asserts no tenable ground for the issuance of letters. It negatives the existence of personal property, and in this respect the case is to be distinguished from Murphy v. Creighton, 45 Iowa, 179, where this was presumed in aid of the jurisdiction of the court, and Lees v. Wetmore, 58 Iowa, 170, 12 N. W. 238, where the court was held to have had jurisdiction to determine deceased possessed property within the county. Nor is any equity asserted to meet the suggestions in Bridgman v. Miller, 50 Iowa, 392, and Haynes v. Harris, 33 Iowa, 516. The allegation that administration was necessary to complete the title to real estate of deceased was untrue on its face. Herriot v. Potter (Iowa) 89 N. W. 91. Indeed, there is nothing therein to indicate that the applicant had or has the slightest interest in the estate either as heir or creditor. In these circumstances it must be held that the court, in granting administration, acted without authority. Our statute provides that "administration shall not be originally granted after five years from the death of the decedent, or from the time his death was known when he died out of the state." Section 3305, Code. Upon the expiration of this period the personal estate of decedent, if any he had, vested absolutely in his heirs. Phinny v. Warren, 52 Iowa, 332, 1 N. W. 522, 3 N. W. 157. See, also, Crossan v. McCrary, 37 Iowa, 684; Lees v. Wetmore, supra; Christie v. C., R. I. & P. R. R. Co., 104 Iowa, 707, 74 N. W. 697; Murphy v. Murphy, 80 Iowa, 740, 45 N. W. 914. Can a mere stranger intervene after this period, and, by procuring letters of administration, subject the realty which has been vested in heirs for more than five years, and which could have been transferred free from all indebtedness of decedent, to the payment of claims? Should one heir be allowed thus to render the property of others liable for debts barred by the statute? Can this statute be entirely ignored, and, notwithstanding its provisions, parties interested in the estate, in the absence of any equitable or other considerations, deprived of its benefit? We think not. Should appellee's claim be established, there is no personalty from which to satisfy it. The bar of the statute, if interposed, would be conclusive defense to an application for a sale of the real estate. Administration must be applied for not only in the proper county (In re King's Estate, 105 Iowa, 320, 75 N. W. 187), but within the statutory period. If granted thereafter, without proper showing at least, the entire proceeding is void. Wales v. Willard, 2 Mass. 120. But there is still another reason for rejecting the claim. The evidence satisfactorily shows that the indebtedness, if any ever existed, has been paid. The claimant began work July 3, 1893, and decedent died October 4, 1894. Though she may have been employed to work for him during the lives of himself and wife, his death terminated such employment. During that period she was to receive not to exceed $1.75 per week. In a book of account kept by deceased were found these entries in claimant's handwriting: "Cora paid to Oct., 1893," and on another page, in the same handwriting, "Cora paid to May, 1895." She had continued to work for Mrs. Diltz subsequent to his death until her death in 1898 or 1900; and in another memorandum, in March, 1897, the account is marked settled, and again, "Settled up to April 1st, 1898." No evidence was offered explaining these memoranda, and we think them sufficient to establish payment. The administratrix necessarily labored under difficulties in establishing payments of a character ordinarily made by handing over the money, and slighter proof will suffice than might be required under other circumstances. Each party will pay her own costs.

Reversed.

WEAVER, J., taking no part.

KINZER v. STEPHENS (PUGH et al., Garnishees).

(Supreme Court of Iowa. Oct. 16, 1903.)

HOMESTEAD—VOLUNTARY SALE BY HEIRS—EXEMPTION OF PROCEEDS.

1. Though, under Code, § 2985, on death of one having a homestead his heirs hold it exempt, the proceeds of their voluntary sale thereof are not exempt.

Appeal from District Court, Keokuk County; W. G. Clements, Judge.

Digitized by Google

Garnishment proceedings to subject the purchase price of a homestead owned by George W. Stephens and Hannah Stephens, his wife, now deceased, to the payment of a judgment obtained by one Kinzer against William W. Stephens, a son of George W. and Hannah Stephens. The trial court held the garnishees liable, and they appeal. Affirmed.

C. H. Mackey, for appellants. Stockman & Hamilton, for appellee.

DEEMER, J. The case involves a construction of section 2985 of the Code, which reads as follows: "Upon the death of either husband or wife the survivor may continue to possess and occupy the whole homestead until it is otherwise disposed of according to law * * * but if there be no survivor, the homestead descends to the issue of either husband or wife according to the rules of descent, * * * and it is to be held by such issue exempt from any antecedent debts of their parents or their own, except those of the owner thereof contracted prior to the acquisition." Under this section we have held that the legal title of the homestead upon the death of the owner descends to the heirs of such owner, subject to a right of occupancy in the surviving husband or wife (Burns v. Keas, 21 Iowa, 257), and that the heirs hold the homestead free from the debts of their ancestor, and also hold it exempt from their own debts contracted before the death of their ancestor, even though they do not take possession of and occupy the homestead (Kite v. Kite, 79 Iowa, 491, 44 N. W. 716). The exemption is not because of any right the heirs have in the property, but because of the homestead right of their ancestor; hence occupancy by the heirs is not essential to the exemption. Johnson v. Gaylord, 41 Iowa, 362; Baker v. Jamison, 73 Iowa, 698, 36 N. W. 647. From this it follows that even a nonresident heir is entitled to hold his share exempt from his debts. Maguire v. Kennedy, 91 Iowa, 272, 59 N. W. 36.

Geo. W. Stephens owned a homestead at the time of his death, which occurred May 10, 1884. He left surviving him his widow, Hannah, and six children, one of whom is defendant W. W. Stephens. The widow continued to occupy the homestead until her death on June 16, 1901. Both George W. and Hannah Stephens died intestate. Kinzer recovered his judgment against W. W. Stephens October 1, 1888, but it does not appear when the debt on which judgment was obtained was contracted. On the 23d of November, 1901, the surviving heirs of George W and Hannah Stephens sold the homestead to garnishee Frank Pugh, and the money sought to be sequestered in this case is that part of the purchase price belonging to defendant Wm. W. Stephens. The trial court rendered judgment against the garnishee, holding that the proceeds from the sale of the homestead were not exempt in the hands of the heirs or their vendees. Defendant Wm. W. Stephens has never occupied the premises, and makes no claim to the proceeds thereof because the property was his homestead. Nor does it appear that this defendant was intending to change homesteads by investing the proceeds of the one inherited from his ancestor in another. The sole question in the case, then, is, are the proceeds of such a homestead as we have described exempt from the debts of an heir? It is fundamental that, in the absence of statute, the proceeds of exempt property, resulting from a voluntary sale thereof, are not exempt. And it is just as well settled that such proceeds from an involuntary sale, damages to the property growing out of a tort, or the resultant of other involuntary substitution of nonexempt for exempt property, is exempt, at least for a reasonable length of time. Friedlander v. Mahoney, 31 Iowa, 311; Harrier v. Fassett, 56 Iowa, 264, 9 N. W. 217; Thompson on Homesteads & Exemptions, §§ 745, 746; Kaiser v. Seaton, 62 Iowa, 463, 17 N. W. 664; Mudge v. Lanning, 68 Iowa, 641, 27 N. W. 793; Blum v. Light, 81 Tex. 414, 16 S. W. 1090; Reynolds v. Haines, 83 Iowa, 342, 49 N. W. 851, 13 L. R. A. 719, 32 Am. St. Rep. 311; First Nat. Bank of What Cheer v. Willie (Iowa) 87 N. W. 734; Huskins v. Hanlon, 72 Iowa, 37, 33 N. W. 352; Kirby v. Giddings, 75 Tex. 679, 13 S. W. 27. To meet this situation, several states have provided for the exemption of the proceeds of a voluntary sale of exempt property. See statute cited in Watson v. Saxer, 102 Ill. 585; Hewitt v. Campbell (Wis.) 12 N. W. 45. We have no such statute; hence the general rule obtains, and, as the sale in this case was voluntary, the proceeds are not exempt. With the policy of law we have nothing to do. It may be that under this construction the homestead acquired by descent from an ancestor is of no great value to an heir who is so unfortunate as to be in debt when he acquires his right thereto, and that the Legislature should provide for an exemption of the proceeds for a reasonable length of time, or for certain purposes; but it is not our province to cure hardships, real or apparent, in the law as it is written. Appellants' counsel rely on Reynolds v. Haines, 83 Iowa, 342, 49 N. W. 851, 13 L. R. A. 719, 32 Am. St. Rep. 311; Kaiser v. Seaton, 62 Iowa, 463, 17 N. W. 664; First Nat. Bank of What Cheer v. Willie (Iowa) 87 N. W. 734. None of these cases are in point. In Reynolds' Case the question involved was the right to the avails of insurance upon exempt personal property. There is no voluntary disposition of the property in that case. The money due on the policy stood in place of the property destroyed and was acquired in invitum. In the Kaiser Case the money was the proceeds of a railway right of way through the

Digitized by Google

expressly said in that case, "Whether the proceeds of a voluntary conveyance by the husband would be exempt, we do not determine." The case was made to turn expressly on the thought that the right of way was compulsorily taken. The question here presented was not involved in the What Cheer Bank Case, and the language used in argument must be construed with reference to the facts recited in the opinion. It does not appear whether the sale in that case was voluntary or involuntary. The inference is that it was involuntary, for the proceeds were in the hands of the executor of the ancestor's estate. At any rate, the funds were held not exempt. In Kite v. Kite, 79 Iowa, 491, 44 N. W. 716, also relied upon by the appellant, the proceeds were the result of a partition sale which was also in invitum. Moreover, the exact question here presented was not involved in that case. It is argued that there is no distinction between a voluntary sale or partition of the property and a sale by referees under an order of court in a partition proceeding. But it must be remembered that there was no voluntary partition of the property among the heirs. They joined in a deed of bargain and sale to the garnishees, each selling his interest in the property for an agreed price, with the intent, it is true, of securing the proceeds for his own use, but without any purpose, so far as this record discloses, of reinvesting the same in exempt property. Proceeds from the sale of exempt homestead property are prima facie liable for debts, and are exempt only when shown to be the proceeds of a homestead, sold with the intention to use the proceeds in the purchase of another home. First Nat. Bank of Davenport v. Baker, 57 Iowa, 197, 10 N. W. 633; Paine v. Means, 65 Iowa, 547, 22 N. W. 669. Had there been a voluntary partition of the property, and an allotment to each tenant in common of a specific part of the property in severalty, it may be that this interest would be exempt, for there would in such case be much reason for saying that there had been no disposition of the property. But where, as in this case, there was no partition, but a voluntary sale, the rule as to voluntary partition does not apply. There is, however, a manifest distinction between a voluntary partition and one made by a court at the instance of one or more of the coproprietors regardless of the wishes of the remaining owners. Freeman on Co-Tenancy (2d Ed.) § 394. Where land is sold by order of court for any purpose, it is the general rule that the character of the property is changed only so far as may be necessary to accomplish the particular purpose in view. This is a familiar illustration of the doctrine of conversion and reconversion. Delafield v. Barlow, 107 N. Y. 535, 14 N. E. 498; McCombs v. Howard, 18 Ohio St. 436; Cahn v. Person, a manifest intent to convert the property into personalty, and the proceeds do not partake of the nature of the realty, unless, of course, there be some trust in the land, or other equitable ground for attaching to the proceeds the character or nature of the article sold. Benjamin v. Doerscher, 105 Iowa, 391, 75 N. W. 330, lends support to our conclusions in this case.

The trial court was right in holding the garnishee liable, and its judgment is therefore affirmed.

DILLENBECK v. PINNELL et al.

(Supreme Court of Iowa. Oct. 10, 1903.)

WILLS—TRUST—LIFE ESTATE AND REMAINDER.

1. Testator devised half his estate to his only child, and gave his wife a life estate in the other half. The child and wife sold the property, each receiving half the proceeds. *Held*, that the will did not make the widow trustee for the child of the remainder of the half she received, and that, in the absence of evidence as to the terms on which the mother received half the proceeds, recovery could not be had thereof, on her death, on the theory that she received it in trust for the child.

Appeal from District Court, Union County; H. M. Towner, Judge.

The opinion states the case. Affirmed.

Sullivan & Sullivan, for appellant. D. W. Higbee, for appellees.

WEAVER, J. Plaintiff is the daughter of William C. Seaton, who died testate in the state of Illinois September 22, 1853. By the terms of his will, Seaton devised one-half of his entire property, real and personal, to plaintiff, who was his only child and heir, and gave a life estate in the other one-half to his wife, Malinda Seaton. The will made no provision over as to the remainder after the death of the wife, and the same is doubtless to be governed by the statute regulating the descent of property of deceased persons. In the year 1855 Malinda Seaton was married to one Pinnell, by whom she had children, who are the parties defendant in this action. After plaintiff arrived at her majority, she united with her mother in making sale and conveyance of all the lands of which Seaton died seised, the last of such sales being made in the year 1873. The money arising from this disposition of the property was at the time divided equally between the mother and daughter. There is evidence tending to show at the time of such division plaintiff asked her mother to give security for the fund thus received, but she refused to accede to such request. Whether this refusal was based upon a claim of absolute ownership by Mrs. Pinnell, or upon grounds not inconsistent with plaintiff's claim, is a matter of dispute between the witnesses. On April 8, 1900, Mrs. Pinnell died testate, leav-

Digitized by Google

ing the bulk of her estate to the children of her second marriage. In addition to these facts, plaintiff alleges that Mrs. Pinnell, in her lifetime, invested a part of the moneys received by her from the sale of the Seaton lands as aforesaid in the purchase of certain other lands in Iowa and Nebraska; and she therefore asks that such lands so purchased be decreed to have been held by Malinda Pinnell in trust for the use and benefit of plaintiff, and that plaintiff be now held and decreed to be the real owner thereof. The defendants deny plaintiff's claim, and plead the statute of limitations. Plaintiff also filed the same demand as a claim in probate, asking that the same be allowed and ordered paid from the estate of said Malinda Seaton. The district court found for the defendants, denying the relief demanded, and plaintiff appeals.

1. Appellant rests her claim for relief upon the single ground that the will of William C. Seaton operated to create an express trust in Malinda Seaton for the benefit of plaintiff, that equity will follow the trust fund into the property in which it was invested, and that the statute of limitations will not serve to bar plaintiff's right to demand an accounting. Counsel say: "We insist, then, the will of William C. Seaton created an express trust in Malinda Seaton; that the legal title to these premises was in Geneva Seaton, with life estate in Malinda Seaton, and the change from real to personal property did not change the trust character in the proceeds, and Geneva Seaton still had the right to the one-half her mother received at the date of her deed, at the time of the mother's death. We now insist the will is to govern in this case, and declares an express trust. We cannot believe this instrument, sacred as any that may be written, can be set aside, except by the clear and unmistakable intent of the parties." The argument seems to rest upon a misapprehension of the nature and definition of the term "trust" as used in the law. Justice Story defines it as "an equitable right, title, or interest in property, real or personal, distinct from the legal ownership thereof." 2 Story's Eq. Jur. § 964. It has also been defined as existing "where property is conferred upon and accepted by one person on terms of holding, using, or disposing of it for the benefit of another." Mannix v. Purcell, 46 Ohio St. 102, 19 N. E. 572, 2 L. R. A. 753, 15 Am. St. Rep. 562. Also as "where the legal interest is in one person, and the equitable in another." Wallace v. Wainwright, 87 Pa. 263. Ordinarily speaking, a trust implies a cooperation of three parties—a trustor, or a person who creates or establishes the trust; a trustee, or person who takes and holds the legal title to the trust property for the benefit of another; and a cestui que trust, or person for whose benefit the trust is created. Now, in the case before us, when the testator gave to his wife a life estate in the land, and left the remainder over to his daughter, he created no trust whatever. The daughter thereby became the legal owner of the fee in remainder, and the wife became the legal owner of an estate for life in the same property. Neither held anything "in trust" for the other. Each held her separate and distinct legal estate for her own separate use, profit, and benefit. Neither held an equitable right or title in the land, distinct from the legal ownership. Either could sell or convey her estate entirely independent of the other, and without being required to account to the other. While equity may interfere to prevent waste or destruction of the property in which these separate estates exist, it is nevertheless true, as a rule, that the mutual rights and obligations of the life tenant and remainderman are matters of legal cognizance, while those existing between trustee and cestui que trust are cognizable only in equity. Holding these separate estates, plaintiff and her mother could, by uniting in a sale and conveyance, merge the life estate into the fee, and vest their purchaser with the entire title. This was not a "setting aside" of the will, as suggested by counsel, but was the exercise of a legal right under the will. Plaintiff was under no obligation to sell her interest. She could have refused to convey, and in such case would have been entitled to possession of the land upon the death of the mother. She saw fit, however, to unite in the conveyance, and to permit her mother to receive one-half of the moneys thus realized. This act was purely voluntary on plaintiff's part, and her right to recover such moneys depends not upon the will, but upon the contract or agreement, if any there was, between her and her mother. It would have been entirely competent for plaintiff to have insisted, as a condition of her uniting in the conveyance, that a portion of the moneys be set apart or held as a trust fund for her benefit, or that the mother should hold such moneys as she held the land—for life only, with remainder over to the plaintiff. It was also competent for the parties to commute or extinguish the mother's life interest by the payment to her of a present sum in such amount as they might agree upon, but unfortunately there is little or no competent evidence as to the nature or terms of such agreement, if any there was. There is nothing whatever to indicate the creation of an express trust, and no claim is made of any trust by implication or construction. The only indication that plaintiff then supposed or believed she had any right left in the moneys received by her mother is the testimony already noted to the effect that she requested her mother to secure its final payment to her. It is not claimed that a promise of such payment or security was demanded as a condition of the conveyance, or that the mother ever expressly agreed or undertook to hold the fund for life only. Indeed, the

Digitized by Google

interest in said fund, and claimed it as her own. In the absence of other evidence, and in view of all the circumstances, we are justified in assuming that the money received by the mother was so received by agreement or by acquiescence of said parties as the then present value of her life estate in the lands, or, if such be not the case, then there is nothing before us to indicate that said parties thereafter stood in any other relation than that of ordinary debtor and creditor, and that plaintiff's right of action, if any she ever had, is barred by the statute of limitations. Certain it is, the express trust upon which plaintiff bottoms her alleged right of recovery has not been made out.

The judgment of the trial court is therefore affirmed.

ANDERSON v. SCHURKE.

(Supreme Court of Iowa. Oct. 16, 1903.)

HIGHWAYS—ENCROACHMENT—INJURY TO TRAVELER—PROXIMATE CAUSE.

1. Plaintiff, while traveling on a highway, was injured by his horse shying into a wire fence erected by defendant in the highway about 11 feet from the line. It was dark at the time, but plaintiff could see the posts of the fence. It did not appear that he knew where the true line of the highway was, but he knew where the traveled track was and where the fence was. There was nothing to show that the fence had been newly constructed, so as to encroach on the highway as previously used. *Held*, that defendant's wrongful act in maintaining the fence in the highway was not the proximate cause of the injury.

Appeal from District Court, Crawford County; S. M. Elwood, Judge.

Action to recover damages for personal injuries received by plaintiff while riding on horseback along a highway adjoining defendant's premises. The injuries consisted in the cutting and scraping of plaintiff's hip and ankle by a barbed wire fence, maintained by defendant between his premises and the highway, and which, it is contended by plaintiff, was set out into the highway, and not on the true division line. At the conclusion of plaintiff's evidence, the court directed a verdict for the defendant, and from judgment thereon plaintiff appeals. Affirmed.

Conner & Lally, for appellant. P. W. Harding, for appellee.

McCLAIN, J. Plaintiff introduced evidence tending to show that the road along which plaintiff was riding was a legally established highway, and defendant in various ways interposed the objection that the evidence introduced, consisting of the records of the board of supervisors with reference to the establishment of this highway, was not sufficient, on account of want of notice to the court, at the conclusion of plaintiff's case, on defendant's motion, struck from the record all the testimony with relation to the establishment of the alleged highway. Error is assigned as to this ruling, but, in the view which we take of the case, it is not necessary to discuss the correctness of the court's action, although considerable portions of the arguments of counsel on each side are devoted to this question.

The action of the court in directing a verdict for defendant was not based on any specific ground, but if the plaintiff, under the issues and the evidence, was, as matter of law, not entitled to recover, then the court committed no error, and the judgment should be affirmed. We direct our attention, therefore, to the ultimate issues presented to the court for determination, and find that the wrong complained of on the part of the defendant was maintaining his fence along and in the highway, 11 feet from the true boundary line between his premises and such highway; that the injury alleged to have been sustained by plaintiff was the result of this wrongful act of defendant; and that plaintiff was free from negligence. The evidence shows that the traveled track in the highway, if there was a highway, was about six feet from defendant's fence; that, as plaintiff rode his horse along this track after dark, the horse shied or stumbled towards the fence, which was of barbed wire, and forced plaintiff's leg against the fence, with the result that the leg was badly cut and injured. It occurs to us that the only question we need consider is whether, under the issues presented, this evidence tended to show plaintiff entitled to recover damages as against defendant.

It is very doubtful whether there is any competent evidence that defendant's fence was in the highway. No question of that character seems ever to have been raised until after the accident, when the county surveyor made a survey, and he testifies that he then found that the fence, at the place of the accident, was not on the line, but 11 feet from the line, in the highway. He announces this rather by way of conclusion than by stating any facts as to the measurements made. We do not find it necessary to discuss the competency of his testimony, which constitutes the sole evidence that there was any wrong done on the part of the defendant with reference to the maintenance of his fence.

The controlling question, as it seems to us, is whether there was any proximate connection between the alleged wrongful act of defendant in having his fence in the highway and the injury received by plaintiff. It appears from plaintiff's testimony that he was riding in the traveled track; that he could see the posts of the fence; that it was quite

Digitized by Google

dark at the time; and that, without any volition on his part, his horse carried him out of the traveled track, and against the fence. It does not appear that plaintiff had any knowledge as to where the true line of the highway was, or that he was directing his course with reference to that line, independently of the fence which defendant had constructed, nor that the fence had been newly constructed, so as to encroach on the highway as previously used. Plaintiff knew where the traveled track was, and knew where the fence was, and was not misled nor surprised by reason of any act of the defendant with reference to the location and maintenance of the fence. To illustrate the view we take, we may suppose a case which, as we think, involves exactly the same legal proposition as the one before us. If the traveled track had been near the other side of the highway, which, as legally established, must have been 66 feet wide (and all the evidence before us on the subject is to the effect that it was of this width), and a person traveling along such track had been violently thrown from his carriage the width of the highway, and had fallen against defendant's fence, and received injuries involving permanent disability and constant pain and suffering, such as would justify a verdict for very large damages, and it could be shown that if defendant's fence had been on the exact line, instead of a few feet therefrom, the injured person would not have struck such fence, and would not therefore have suffered damages, would the defendant be liable for the consequent injury? Would there be any proximate connection between maintaining the fence not on the true boundary line and the injury suffered in such case? Conceding that defendant was in the wrong in having his fence set over for some distance in the highway, but not in such way as to obstruct the travel, or render the highway too narrow for safe use, would his wrong be the proximate cause of such injury? No doubt defendant could be indicted for the obstruction of the highway, but would there be any proximate connection between the wrong which he commits and the injury suffered? The answer is self-evident. One who does a negligent or wrongful act is responsible for the consequences resulting from such act, whether he had reason to anticipate them or not, if they are the natural result of his wrong; but if the result is purely accidental, and the defendant's wrong has no causal connection with the injury suffered, then, no matter how great the wrong may be, the injury cannot be charged to him. The occasion of plaintiff's injury in this case was the accident of his horse carrying him against the fence. There is no reason to suppose that the traveled track would not have been within six feet of the fence, even if the fence had been constructed on the true line, and the chance of injury to plaintiff from such an act would have been exactly the same as it actually was in this case. With all the ingenuity we can exercise in marshaling the facts before us, we are unable to imagine any connection whatever between the accident to plaintiff and the wrong of defendant in having his fence in the highway. The court was therefore justified in directing a verdict for defendant, and the judgment is affirmed.

BAIRD v. CONNELL et al.

(Supreme Court of Iowa. Oct. 15, 1903.)

HUSBAND AND WIFE—AGREEMENTS FOR SEPARATION — VALIDITY — ESTOPPEL — ACTION FOR DIVORCE DECREE—EFFECT ON WIFE'S PROPERTY RIGHTS.

1. Code, § 3154, which provides that, when property is owned by the husband or wife, the other has no interest therein which can be the subject of contract between them, nor such interest as will make the same liable for the contracts or liabilities of the one not the owner of the property, relates to the interest which the husband or wife has in the lands of the other created by the marriage relation, but has no application to any property interest which the husband or wife may have in the land of the other based on contracts with third persons.

2. A wife purchased land and assumed to pay a mortgage thereon, and obtained a bond for a deed. The mortgage was not paid, but a bank took it up on the grantor giving a deed to the property as security. Thereafter the wife and her husband executed a quitclaim deed to the bank, and on the same day entered into an agreement for future separation, with provisions as to a division of their property. The husband, under the agreement, purchased his wife's interest in the land, and paid her $1,100 therefor. *Held*, that the agreement of separation was valid to the extent that it had been executed by the husband purchasing the wife's property, so that there could be no rescission thereof without a return of the money received by the wife, though invalid so far as it related to the interest each had in the property of the other, and though rescinded by their resumption of conjugal relations.

3. Even assuming that the entire agreement was void because indivisible, and that it was rescinded so far as it was executory, the wife was estopped in equity from recovering the property until she had returned the money received from her husband therefor.

4. Where, at the time of a separation agreement by a husband and wife, certain money was regarded as belonging to the husband, the wife, in the absence of any mistake or fraud at the time, could not thereafter claim that the money was her property because received by the husband in consideration for land previously conveyed to her by the husband in fraud of his creditors.

5. In a suit for divorce, instituted by a wife, the petition contained allegations that at the time of the marriage she owned a certain amount of property, and that defendant by fraud had obtained possession thereof, and prayed for alimony. The answer averred a prior agreement of separation between the parties, which divided their property, and alleged that each received the property agreed on, that defendant paid to plaintiff as a part of the agreement a specified sum for an interest in land belonging to the wife, which plaintiff retained. Plaintiff's reply admitted the allegations of the answer, but pleaded a subsequent resumption of conjugal relations. *Held*, that the decree in the divorce suit awarding the wife alimony adjudicated the property rights of the wife, and

Digitized by Google

that such decree was conclusive in a then pending suit for the recovery of the land.

Appeal from District Court, Sioux County; Geo. W. Wakefield, Judge.

Suit in equity to set aside a conveyance, for redemption of certain lands, and to quiet plaintiff's title thereto. Trial to the court. Decree for defendants, and plaintiff appeals. Affirmed.

J. S. Struble and A. K. Webb, for appellant. W. D. Boies, for appellees.

DEEMER, J. The property in controversy was purchased by plaintiff, who was the wife of S. B. Baird, in the year 1889, from one H. C. Connell, who executed and delivered to her a bond for a deed. There was a mortgage on the property to one Ormsby for the sum of $1,000, which plaintiff assumed and agreed to pay. The plaintiff and her then husband took possession of the property, and used and occupied the same until the year 1893, when plaintiff removed therefrom, and went to live with her daughter, with whom she lived until the year 1894, when she moved to Story county, Iowa. The Ormsby mortgage matured some time in the latter part of the year 1890, and in the early part of that year plaintiff's husband made arrangements with the Sheldon Bank to take up the mortgage, and as security therefor was to procure a deed from Connell running directly to the bank. This was consummated by the execution of deed from Connell and wife to the bank under date of November 24, 1890. Thereafter, and on December 17, 1891, Baird and wife also executed a quitclaim deed of the property to the bank. This the plaintiff claims was also intended as security to the bank for the amount of the advancement to Ormsby and a small indebtedness of S. B. Baird. There is a dispute regarding the character of this conveyance, and we shall have more to say of it during the course of this opinion. Baird and his wife did not get along pleasantly, and on December 17th they agreed to separate, and entered into a written contract of separation, the material parts of which are as follows: "S. B. Baird and M. J. Baird, his wife, having concluded and agreed to live separate and apart the one from the other, make the following agreement in relation to their property: M. J. Baird is to have all the household furniture in the house occupied by them in Boyden, Iowa, two bedsteads, mattresses, springs, and pillows upon the same, two pairs of blankets, one double lounge, one wash stand, two pitchers, two wash bowls, one extension table, all the dishes, two carpets, one piece of ten yards of new carpet, two feather beds, one center table, one small rocking chair, six double chairs, half of the potatoes in the cellar, two cows, one red without horns, the other a brindle cow with horns—and two pigs. The said S. B. Baird is to have the balance of the property and furniture, and this is to be regarded as a final settlement of their property rights and interest and neither is to have hereafter any interest whatsoever in the property of the other; nor is either to be liable for the support or maintenance of the other, and they each agree and do relinquish all claim to the other's property. [Signed] S. B. Baird. M. J. Baird." They did not long remain apart, but after a short time resumed their former relations, which continued in a fitful sort of a way until about the year 1893, when they again separated, which separation was final. In October of the year 1895 plaintiff obtained a divorce from her husband in the district court of Story county, Iowa, and in that proceeding was awarded alimony in the sum of $600. In the latter part of the year 1893 S. B. Baird began negotiations with defendant Morse to sell or trade him the property in dispute, which finally culminated in a contract of exchange, and the execution of a special warranty deed by the Sheldon Bank to Morse under date of January 1, 1894. Before bringing her suit for divorce in Story county, plaintiff commenced this action, which is to set aside the deed from the bank to Morse, to redeem the property from the bank's claim, for an accounting of the rents and profits, and to quiet plaintiff's title in and to the property. The defendant Connell filed a disclaimer, and is consequently out of the case. The defendant Sheldon Bank does not seem to have been more than a nominal party, for the reason, no doubt, that it has received its money, and is indifferent as to the result of the controversy. The defendants Morse answered the petition, setting forth many defenses, the most important of which were that they purchased the property for a valuable consideration from the holder of the legal title, without any knowledge or notice of the plaintiff's claim; second, that plaintiff parted with all her interest in the property at the time of her first separation from her husband; third, that plaintiff's claim to the property was adjudicated in the divorce proceedings in the Story county district court; and, fourth, an estoppel growing out of plaintiff's conduct with reference to the property. We shall notice these defenses as we proceed.

Having joined with her husband in the conveyance of the property to the bank, it will be observed that on the face of the records plaintiff has no standing in court. Defendants Morse have a clear paper title running from the government through certain mesne conveyances to Connell, from Connell to the bank, and from the bank to Morse. The bond for a deed has been performed by these conveyances, and whatever interest Mrs. Baird had in the property was ostensibly transferred to the bank by the quitclaim deed from Baird and wife. But it is conceded that these conveyances to the bank, except the one from Baird and wife, were for security only, and should, therefore, be treated, so far as this litigation is concern-

Digitized by Google

ed, as mortgages. But, as plaintiff joined with her husband in the conveyance to the bank, she must show that this also was intended as security, else her case must fail. This presents one of the controlling questions in the case, and, if decided adversely to plaintiff, will end her case. It will be observed that this deed was made on the same day as the separation agreement, from which we have quoted. That agreement does not in express terms refer to the property in dispute, but the evidence leaves no doubt as to the character of the transaction. Plaintiff herself testified as follows: "Baird and I had separated, and had entered into a written contract of separation about December 17, 1891. Exhibit 5 is that contract, and that is my signature. On that same day Baird and I had an oral agreement as to what he should pay me for my interest in the property in controversy under the terms of our separation agreement. We had a talk a few days before December 17, 1891, and we went to Sheldon December 17th, to settle up the matter. He made a proposition that I could take one thousand ($1,000.00) dollars or the property. That was in view of our separation, and that agreement was carried out at Sheldon December 17, 1891. He paid me eleven hundred ($1,100.00) dollars for my interest in the property." This is fully corroborated by the representative of the bank, who testified: "She accepted from S. B. Baird in the sum of eleven hundred ($1,100.00) dollars. At the time of the payment of the eleven hundred (1,100) dollars to Mrs. Baird by Mr. Baird, there was a deed given to them by Sheldon Bank covering the property in controversy. We were to hold it as security for the eleven hundred seventy-four dollars twenty-five cents ($1,174.25) which was to be paid by Baird, and after that was paid we were to deed it to any party designated by him. The reason this quitclaim deed was executed was, I thought we wouldn't have first-class title unless we had a deed direct from Mrs. Baird; therefore I demanded a quitclaim deed from her to clear the title. I took this deed with the understanding on my part that Mrs. Baird was relinquishing all her right and title to the land in controversy by reason of the payment of the eleven hundred (1,100) dollars to her by Mr. Baird. On this same day, December 17, 1891, I rented the premises to her for one hundred twenty ($120) dollars, which she paid in cash. I gave Mr. Baird credit for the one hundred twenty (120) dollars paid by her. I rented these premises to Mrs. Baird for the benefit of Mr. Baird, and he received the proceeds. Lowell Morse paid me the one thousand ($1,000.00) dollars due upon the Ormsby mortgage. I deeded the premises to Lowell Morse at Mr. Baird's instance. I think I never had any talk with Mrs. Baird about the ownership or the title from December 17, 1891, until I deeded this property to Lowell Morse, on January 1, 1894." This, then, was the real agreement between the parties, and it is manifestly conclusive of the case, unless it be for certain matters relied upon by plaintiff, which are said to abrogate and nullify the agreement.

It goes without saying that an agreement between husband and wife for future separation is contrary to public policy, and is therefore void; and it is also true that, when property is owned by husband or wife, the other has no interest therein which can be the subject of contract between them. Code, § 3154. But it is just as true that this section relates to the interest which the husband or wife has in the lands of the other which arises out of or is created by the marriage relation. It has no application to any property interest which the husband or wife may have in the land of the other based upon contracts with third persons, or derived from sources other than the marriage relation. Baxter v. Hecht (Iowa) 67 N. W. 407. Indeed, section 3157 of the Code expressly provides that a conveyance, transfer, or lien executed by either husband or wife to or in favor of the other shall be valid to the same extent as between other persons. Separation agreements, which generally are regarded as invalid in so far as they relate to the future, have often been recognized and enforced in so far as they relate to maintenance or other collateral engagements. McKee v. Reynolds, 26 Iowa, 578; Robertson v. Robertson, 25 Iowa, 350; Carson v. Murray, 3 Paige, 483; Luttrell v. Boggs (Ill.) 48 N. E. 171; Walker v. Beal, 9 Wall. 743, 19 L. Ed. 814. There is no doubt that parts of this contract are invalid because they relate to the interest that each had in the property of the other, and perhaps for the reason that by the terms thereof neither was to be liable for the support of the other. But there is no doubt that, in so far as it involves a purchase by the husband of the wife's separate property, it was valid unless so involved with the other considerations as to invalidate the whole; or because of the fact that the agreement was rescinded when the parties resumed the marital relation. There is no doubt that an agreement of separation will be considered as rescinded if the parties afterward cohabit or live together as husband and wife. And in such cases all the provisions of the agreement will cease to operate, and the parties will be restored to their marital rights to the same extent as if no separation had ever taken place. Randall v. Randall, 37 Mich. 563. But this rule does not go to the extent claimed by counsel for plaintiff. While the agreement is, no doubt, treated as rescinded in so far as the consideration therefor consists in the agreement to live apart, there may be other conditions, based on independent considerations, which are not annulled by the presumption of conjugal relations. Here plaintiff had the option to take the property in controversy as her own or to take $1,100 for her interest therein. She

marriage relation did not operate to rescind this part of the agreement. It had been executed to this extent, and it seems to us there could be no rescission without a return of the money. But assuming that the contract was and is void because indivisible in character, and that, so far as executory, it was rescinded, we are nevertheless constrained to hold that in equity plaintiff is estopped from reclaiming the property until she has returned the $1,100 which she says she received from her husband therefor. Plaintiff says, however, that she returned the consideration to her husband before bringing this suit. The record does not support this contention. After receiving the money, she used $100 thereof and loaned $1,000, received payments of interest and principal on the loan, and finally brought suit in her own name for the balance due, and obtained judgment, and thereafter assigned this judgment to her brother. This does not look much like a return of the money. She further claims that the $1,100 paid her by her husband was in fact her own, having been derived by her husband from property theretofore owned by her. But this contention is not sustained by the evidence. The money in truth belonged to the husband, and the parties so treated it at the time the separation agreement was entered into. That was a full settlement of their property interests, and there is no claim of any mistake or fraud at that time. Indeed, plaintiff's claim to the money is based largely on the fact that it was the proceeds of certain lands which had been deeded to her by her husband to cheat and defraud his creditors. Although such a conveyance is no doubt good as between the parties, the law does not look with a great deal of favor upon one who undertakes to substantiate his claims by proof of fraud. The husband, with the knowledge of the wife, received the money for the land which had been deeded to her in fraud of creditors, and both parties treated it as his when the separation agreement was entered into. It hardly lies in plaintiff's mouth to say that because of a fraud in which she joined she should now be treated as the owner of the money received by her in consideration for the land in controversy, and in this manner secure not only the land, but the purchase price as well.

But it is said that, if the contract was void, no estoppel can grow out of it, or of anything done under the contract. There is no merit in this claim. It is now well settled that a void contract, or even a void decree, may be the basis of an estoppel. Mohler v. Shank's Estate, 93 Iowa, 273, 61 N. W. 981, 34 L. R. A. 161, 57 Am. St. Rep. 274; Arthur v. Israel, 15 Colo. 147, 25 Pac. 81, 10 L. R. A. 693, 22 Am. St. Rep. 381; Rawley v. Burris (Tenn. Ch. App.) 47 S. W. 176; Cupp v. Campbell, 103 Ind. 213, 2 N. E. 565. No matter, then, what view of the contract is to

ecuted under the circumstances disclosed, until she returns or offers to return the consideration she admits she received therefor.

But there is another feature of the case which is equally conclusive. Plaintiff alleged in her petition that the deed from Connell to the bank was executed without her consent, and was not in fact her deed. She also claimed that the conveyance to the bank, in which she joined with her husband, was of no validity; that the transfer to Morse was fraudulent, conclusive, and void; that the property was hers, subject only to the payment of the amount advanced by the bank. This action was commenced before her action for divorce was begun, but she secured a decree in the divorce case before this action was tried. In that decree she was awarded the sum of $600 as alimony and $100 attorney's fees. That action was tried on the following allegations with reference to the property rights of the parties. In plaintiff's petition for divorce she alleged: "Plaintiff further states that she owned in her own name in cash and property, at the time she married said defendant, about $1,000, and that since her marriage with defendant she has held in her own name, as the proceeds of said money and labor, property to the value of $5,000 and over; and that said defendant, by fraud and false promises, and threats of personal violence, has obtained possession and control of said property, and procured title thereto in his own name, or in the name of some other person, and has either squandered the same, or caused the same to be transferred to other persons for the purpose of placing the same beyond the reach of plaintiff, and to bring plaintiff to want; and that by threats of personal violence to plaintiff forced her to leave her own home, and at the same time telling her she had no right there, and that he did not intend to live with her any more, and that, if he could not get rid of her in one way, he would in another way." She asked judgment for alimony, and for such other and further relief as might be adjudged equitable. This was denied by defendant husband, and he also pleaded as follows in his answer: "Par. 2. Defendant, further answering, states that plaintiff and defendant did, on the 17th day of December, 1891, make between themselves a legal separation in writing, and divided their property, and each received the said property agreed upon; and defendant also paid to plaintiff as a part of said separation the sum of $1,000, and plaintiff retained and still retains all the property so received by her; and by reason of such separation and agreement plaintiff has no further claim for any property from defendant. A copy of said agreement is hereto attached, marked 'Exhibit A,' and made a part hereof." To this plaintiff replied as follows: "Admits that part of paragraph

Digitized by Google

two in defendant's answer that relates to an agreement of separation and division of property, and the Exhibit A thereto, but avers the fact to be that subsequent to said agreement of separation and division of property said defendant returned to the home of said plaintiff, and by means of pretended repentance for his cruel and inhuman treatment of said plaintiff, and a pretended regard for her as a wife, and solemn promise to her that he would amend his ways and treat her as a husband should a wife, and assist in providing for her and family, said plaintiff permitted said defendant to return to her home with the express agreement and understanding that said agreement of separation and division of property should be null and void and count for naught; and upon said promise and agreements of said defendant said defendant was permitted to return into the home of said plaintiff, and the relation of husband and wife was resumed by plaintiff and defendant, which relation existed and continued up to the time set forth in paragraph sixth of plaintiff's petition; that said promises of amendment and kind treatment by which plaintiff permitted defendant to return to her home and resume the relations of husband and wife were totally disregarded by defendant shortly after his return, and, instead of becoming more kind and loving in his treatment of plaintiff, he became more abusive and brutal in his treatment of plaintiff, until plaintiff, becoming afraid that defendant would put his threats into execution, fled from her home, as stated in her petition." From this it will be noticed that most of the matters in issue in this case were in dispute in that, and that the validity of the agreement of separation and division of property was squarely involved. True, plaintiff did not attack it on all the grounds that she does here, but she challenged the validity thereof, and obtained her award of alimony on these issues. Was this such an adjudication as bars plaintiff of relief in this case? Suggestion is made in argument that, as this suit was first commenced, the decree in the divorce case cannot constitute an adjudication. But this is not sound. It is the decree which constitutes the adjudication, and not the commencement of the action.

Perhaps the plea of another action pending might have been good in the divorce case, but that was not interposed. So the only question here is the effect of the prior decree. It must be remembered that, while the property in controversy at one time equitably belonged to the wife, she at no time held the legal or record title thereto. That was either in Connell, the Sheldon Bank, or defendant Morse. She now claims, just as she did in the divorce case, that her husband was attempting to deprive her thereof, and to defraud. Alimony is not awarded in this state, or generally in this country, according to the ecclesiastical practice whereby the amount of the husband's income is ascertained, and a portion thereof awarded his wife for maintenance. Under our practice property rights of each are ascertained, and final distribution is made of the property in order that the parties may forever remain independent of each other. Calame v. Calame, 24 N. J. Eq. 440. In making the allowance the court must estimate the property of both parties, and adjudicate the claims that each has against the other. Having the parties before it, the court will award complete relief. Pomeroy, Eq. Juris. § 231. This question is set at rest for this state in Patton v. Loughridge, 49 Iowa, 218, wherein it is expressly held that a claim of the husband for property of which he has been defrauded by his wife will be presumed to have been adjudicated in an action by the wife for divorce, in which a decree allowing alimony was granted, and he cannot afterwards maintain an action on the claim against a party by whose alleged instrumentality the fraud was effected. This case is directly in point, and, as we think, controlling on this issue.

We are not to be understood as holding that the separate property rights of husband and wife are necessarily adjudicated in every case where alimony is awarded. What we do hold is that under the facts of this particular case the very matters in issue between the parties were involved, or might have been raised, in the divorce case, and that the decree for alimony in that case, under the issues there presented, is conclusive here. The authorities are practically harmonious on this proposition. Tatro v. Tatro, 18 Neb. 395, 25 N. W. 571, 53 Am. Rep. 820; Behrley v. Behrley, 93 Ind. 255; Meldrum v. Meldrum (Colo. Sup.) 24 Pac. 1088, 11 L. R. A. 65; Roe v. Roe (Kan.) 35 Pac. 808, 39 Am. St. Rep. 367. See, also, Nelson on Divorce and Separation, § 903; Glaze v. Bank (Ind. Sup.) 18 N. E. 450; Rosholt v. Mehus (N. D.) 57 N. W. 783, 23 L. R. A. 239.

Something is said about the property in controversy being the plaintiff's homestead, and that her homestead rights have never been forfeited. The ready answer to this is that she voluntarily abandoned the homestead long before she commenced either suit. At the time the decree of divorce was rendered, plaintiff held neither the legal title nor any homestead rights in the property. But she says she abandoned it because of the abuse of her husband. This is not true. She voluntarily left the property, and acquired a residence in another county. It would not be profitable to consider the testimony with reference to the relations which existed between plaintiff and her husband prior to the decree of divorce. They were far from harmonious, and it is no doubt well for the good of society that they were divorced. It is enough to say in this connection that, whatever the husband's fault, the wife was about as bad as she could be. That the parties remained together as long as they

Digitized by Google

did is not the only unusual thing in the case.

Many other matters are discussed by counsel, but, as the ones we have considered seem to be controlling, we do not stop to consider them.

The decree is manifestly correct, and it is affirmed.

WILKINS v. CITY OF MISSOURI VALLEY.

(Supreme Court of Iowa. Oct. 19, 1903.)

PERSONAL INJURY ACTION—TESTIMONY OF PHYSICIAN—CONFLICTING EVIDENCE—QUESTION FOR JURY.

1. In an action for personal injuries, the physician attending plaintiff may testify as to how long she continued to suffer pain after she was injured.

2. Where the evidence on an issue of fact is conflicting, the question is for the jury.

Appeal from District Court, Harrison County; N. W. Macy, Judge.

Action at law to recover damages for personal injuries received by plaintiff while passing over and along a sidewalk in the defendant city. Trial to a jury, judgment for plaintiff, and defendant appeals. Affirmed.

C. W. Kellogg, for appellant. J. S. Holland and S. H. Cochran, for appellees.

DEEMER, J. The assignments of error, many of which are omnibus in character, and otherwise defective, present but two questions for our consideration—one a ruling on the admission of evidence, and the other the correctness of two instructions given by the trial court.

Plaintiff called as a witness in her behalf the physician who attended her after she received her injuries, and he was asked how long plaintiff continued to suffer pain after she was hurt. This was objected to, but the objection was overruled, and of this complaint is made. The ruling was correct. Such an interrogatory was proper to be propounded to an expert. Barber v. Merriam, 11 Allen, 322; Quaife v. R. R., 48 Wis. 513, 4 N. W. 658, 33 Am. Rep. 821.

We pass over some of the matters argued, because not based on sufficient assignments of error, and reach the question as to the correctness of the ninth and tenth instructions given by the trial court. Defendant's counsel say they were, perhaps, correct as abstract propositions of law, but were incorrect here, because of want of evidence on which to predicate them. The record is not in a very satisfactory condition, because of the fact that the testimony of many of the witnesses is so set forth as to be difficult of comprehension. They doubtless referred to a plat or diagram of some kind in giving their evidence, and this has not been embodied in the record, and we have had some difficulty in understanding the exact situation. However, there seems to be enough in the record to justify the giving of the instructions complained of. There was some evidence as to how the walk was originally constructed, and enough to take the case to the jury on the question of defendant's failure to use ordinary care and diligence in keeping the same in a safe condition for public travel. There is a conflict as to the exact place where the accident occurred, but that was for the jury. The witnesses were not agreed as to what caused the defects complained of, but this also was for the jury. We see no error in the instructions of which defendant may justly complain.

There is no merit in any of the assignments which are in proper form to be considered, and the judgment is therefore affirmed.

¶ 1. See Evidence, vol. 20, Cent. Dig. §§ 2312, 2313.

McELHONE v. WILKINSON.

(Supreme Court of Iowa. Oct. 20, 1903.)

QUOTIENT VERDICT—NEW TRIAL—REMITTITUR.

1. A verdict is not a quotient verdict, though the jury acted on the suggestion that each should note the amount he thought plaintiff entitled, and that such amounts should be added and the sum divided by 12, to ascertain the average; there being no agreement that the amount so found should be their verdict, and it in fact not having been their verdict.

2. There is no error in refusing a motion for new trial as to one count of the petition; plaintiff having, pending the motion, remitted the amount recovered thereon.

Appeal from District Court, Jasper County; W. G. Clements, Judge.

Action to recover damages for the trespass of cattle and for slander. Trial to a jury, and verdict and judgment for the plaintiff. The defendant appeals. Affirmed.

L. S. Kennington, for appellant. G. M. Tripp, for appellee.

SHERWIN, J. It is contended by the appellant that the verdict in this case was a quotient verdict, and it is conceded by the appellee that if such were the case it should not stand. The petition was in counts—count 1 alleging damages for slander; count 2 claiming damages for the trespass of stock. After some deliberation, the jury voted that the plaintiff was entitled to a verdict. It was then suggested that each member of the jury note the amount he thought the plaintiff entitled to, and that the several sums so stated be added together and divided by 12, for the purpose of ascertaining the average. The record conclusively shows that there was no agreement that the sum so found should be the verdict of the jury, and it was not in fact their verdict.

The jury awarded the plaintiff $22.50 on the second count of his petition, and pending the motion for a new trial he remitted

¶ 2. See New Trial, vol. 37, Cent. Dig. § 324.

Digitized by Google

ond count of his petition. This left only the damages claimed for slander, and the court was clearly justified in refusing a new trial. The judgment is therefore affirmed.

STEARNS PAINT MFG. CO. v. COMSTOCK & McQUISTON et al.

(Supreme Court of Iowa. Oct. 20, 1903.)

RECEIVER — COMPENSATION — ALLOWANCES—VALUE OF SERVICES—APPEAL—NOTICE.

1. The court, in fixing the compensation of a receiver for his services in a receivership, cannot consider the value of his services generally, but only their value to the business of which he took charge as receiver.

2. Evidence on the issue of proper compensation and allowance of a receiver for his services, for bookkeeper, and for attorney's fees, examined, and *held*, that an allowance of $100 per month for the receiver, $50 per month for the bookkeeper, and $300 for attorney's fees should be made.

3. It is not necessary on appeal to set out the notice of appeal in full, and an allegation of due service of notice of appeal, if undenied, is sufficient.

Appeal from District Court, Linn County; W. G. Thompson, Judge.

The opinion states the case. Modified.

U. C. Blake and Redmond & Stewart, for appellants. Preston, Grimm & Moffit, for appellee.

WEAVER, J. On October 24, 1901, the Stearns Paint Manufacturing Company, doing business at Des Moines, Iowa, brought an action, aided by attachment, against Comstock & McQuiston, retail dealers in paints and wall paper at Cedar Rapids, to recover the sum of $2,280, claimed to be due on account for goods sold to said defendants, and in said proceeding obtained the appointment of its own manager, George K. Gibson, as a receiver of the stock and book accounts of the defendants, which had been levied upon under the writ. The receiver took possession of the property on or about October 25, 1901. The inventory of the stock amounted to about $2,700, and the credits to about $6,800. From these assets there was realized a total of $5,945.94, out of which was paid for labor and other expenses $1,971.56. The first report of the receiver, dated January 25, 1902, indicates that the work of the receivership was then practically completed, except the disposition of a remnant of goods and accounts, for the sale of which authority was asked and granted. Thereafter the service of the receiver, as reported by him, consisted in selling the stock in lump for $1,025; the sale of equity in building for $280.76; and sundry small sales and collections, $120.62. These transactions were finally reported to the court February 26, 1902, showing a net balance in receiver's hands of $3,971.38. Out months; compensation for bookkeeper, three months, at $100, $300; and for attorney's fees, $300—and that the remainder be ordered distributed pro rata among the creditors, of whom some 27 had filed claims, to the amount of over $6,000. This report was approved, and the several allowances were made as asked by the receiver. Thereafter application was made on behalf of the creditors to set aside said allowances as excessive, and upon a hearing had thereon the allowance to the receiver was reduced to $1,200, and all other objections overruled. From this order the creditors appeal. As already stated, the receiver is the manager of plaintiff corporation, from which he was receiving a salary of $250 per month during all the time he was acting as receiver in this action. He also admits that during that period he was, at least to some small extent, traveling in the interest of his company, and that he was at home attending a sick child at least one week. The store was also closed one week from Christmas till New Year's. The nature of the business, and its extent, while calling for the services of a reliable man, of some reasonable degree of experience, certainly present no feature requiring extraordinary ability or skill. The evidence of the witnesses having experience in that line, and testifying in the case, tends to show that the services of a receiver, including bookkeeping, in such a case, were fairly worth from $3 to $5 per day, and that the services of a bookkeeper alone were worth not to exceed $40 to $75 per month. It seems to us very clear that the allowances upon both these items are exorbitant. We make no question but the receiver performed the duties of the position faithfully and honestly. It is very possible that his time was worth the munificent sum he demands for it, but the court must consider, not the value of his services in larger and more important affairs, but their value to the modest business of which he consented to take charge. We have here a very small stock of goods, and a business presenting no especially serious complications. The greater part of the stock was closed out by a sale in bulk, and the remnant of claims and accounts was disposed of in the same manner. A few contracts taken by the insolvent firm were completed, and one of somewhat larger proportions was assumed by another contractor. The chief part of the work seems to have been done within two months, and final report made within four months, from the date of the receiver's appointment. There were incurred, as we have seen, expenses for various purposes—mostly for labor—to an amount of nearly $2,000. The claims presented by the receiver for his own services and those of his bookkeeper and attorney amount to $2,100, or an aggregate of $4,100, for settling a business

¶ 3. See Appeal and Error, vol. 3, Cent. Dig. § 2317.

Digitized by Google

receiver and $50 per month for the bookkeeper afford ample compensation for the services rendered, and the judgment below will be modified accordingly.

The objection made by appellee to the sufficiency of the showing of notice of appeal is not well taken. We have frequently held that it is unnecessary to set out the notice in full, and that an allegation of due service, if undenied, is sufficient. Merrill v. Timbrell (Iowa) 95 N. W. 237.

Appellee asserts that some of the creditors named in the appeal have accepted their pro rata shares under the order of distribution made by the district court. This is denied by the appellants, and no record is presented in support of the allegation. The motion for an affirmance without modification as to such creditors is denied.

Modified as above indicated, the judgment of the district court will be affirmed at the cost of the appellee. Modified and affirmed.

PACKER et al. v. CRARY (MARSHALLTOWN STATE BANK, Garnishee; ADAMS, Intervener).

(Supreme Court of Iowa. Oct. 17, 1903.)

PRINCIPAL AND AGENT—DEPOSIT BY AGENT OF PRINCIPAL'S FUNDS—RIGHTS OF PRINCIPAL.

1. An owner of cattle delivered them to a third person under an agreement that the latter should fatten and sell them, and account to the owner for the proceeds, after deducting expenses and commissions. Subsequently the owner gave to his creditor an order on the third person for such proceeds. The third person recognized the order, and assured the creditor that the proceeds would be turned over to him. The third person deposited the proceeds in a bank to his own general account. *Held*, that the creditor, as against the creditors of the third person attaching the bank account, was entitled to the proceeds in the bank; they being in the nature of a trust fund, to which the owner of the cattle, or his assignee, had the legal or equitable title.

Appeal from District Court, Marshall County; Obed Caswell, Judge.

Plaintiffs brought action against defendant Crary, aided by attachment, and served notice of garnishment on the Marshalltown State Bank, as a debtor of Crary, holding funds of his on deposit. Judgment was rendered in this action in favor of plaintiffs for $520 and costs, and it was agreed that the garnishee had funds of Crary on deposit to the extent of $767.90. But before the rendition of judgment against Crary, and before any judgment had been rendered against the bank as garnishee, Adams intervened, claiming a right to the fund in the bank by assignment from one Hall, alleged to be the equitable owner of such fund. Issue was taken on the petition of intervention, and such issue was tried as in equity, with the result that the court dismissed the petition

Henry Stone, for appellant. Meeker & Meeker and Binford & Snelling, for appellees.

McCLAIN, J. There is no real controversy as to the facts, and, so far as involved in the decision on the petition of intervention, they are substantially as follows: Hall was the owner of certain cattle, purchased to some extent with money of Adams, the intervener, and he was indebted to Adams to an amount largely exceeding the value of the cattle. Hall delivered these cattle to Crary to be fattened and marketed, with the agreement that Crary should account to Hall for the proceeds, after deducting expenses and commissions. Subsequently Hall gave to Adams an order on Crary for such proceeds, and Crary recognized this order, and assured Adams that he would turn the proceeds over to him in pursuance thereof. Crary deposited the proceeds of the cattle—about $1,150—in the bank to his own general account. It is uncertain, under the evidence, whether a portion of the proceeds were checked out by Crary to Hall's benefit, or not, but it is undisputed that Crary is indebted either to Hall or to Adams, by virtue of the order, for an amount exceeding the balance in the bank to Crary's credit as net proceeds of Hall's cattle; and the sole question is whether Crary's creditors, by virtue of the garnishment, have a right to this fund as against the intervener, Adams, claiming under the order on Crary given to him by Hall, and recognized by Crary before the garnishment proceedings were instituted. Although the proceeds of the cattle were deposited by Crary to his own individual account, nevertheless, as Crary was not the owner of the cattle, but merely the agent of Hall for the sale thereof, the proceeds, if they can be reached, belong to Hall, or to Adams, under the order given to him by Hall, and not to Crary. The proceeds of the cattle, in Crary's hands, were in one sense a trust fund; that is, a fund as to which Crary had the apparent legal ownership, but to which Hall had the legal or equitable right. There can be no controversy as to the proposition that, when an agent deposits his principal's funds in a bank in the agent's individual name, the principal has the right to such funds as against the agent or the bank, and it is immaterial that the funds have been mingled with other funds of the agent. As is said by the court in Van Alen v. American Nat. Bank, 52 N. Y. 1, 7: "When a trustee deposits trust moneys in his own name in a bank with his individual money, the character of the trust money is not lost, but it remains the property of the cestui que trust. If such money can be traced into the bank, and it remains there, the owner can reclaim it. When deposited, the bank incurred an obligation to repay it, which is not lessened or impaired because it incurred

Digitized by Google

box with $100 of his own, the $100 of B. may be claimed by him, although the particular bills constituting it could not be identified. So, if the same $200 were deposited in a bank to the credit of A., the title of B. to $100 would not be affected by the association, and the bank would owe that money to B., in equity, although it owed A. also for his individual money. These views are not only consonant with integrity and justice, but are fully sustained by authority." The fact that, after depositing the so-called trust fund, the agent checks out from his individual account such portion of his general deposit as belongs to him in his individual right, leaving a balance representing all or a part of the so-called trust fund, does not deprive the principal of the right to assert his claim to such balance as his own property. Pennell v. Deffell, 4 De Gex, M. & G. 372, cited and quoted from in Van Alen v. American Nat. Bank, supra. In Farmers' & Merchants' Nat. Bank v. King, 57 Pa. 202, 98 Am. Dec. 215, it appeared that an agent had deposited funds of his principal, with his own funds, in a bank, and that creditors of the agent had garnished the bank for his deposit, which included not only the fund of the plaintiff in that case, but also of other principals. After the garnishment the principal had demanded so much of the funds of his agent as represented the deposit of the principal's money. The court said: "It is undeniable that equity will follow a fund through any number of transmutations, and preserve it for the owner so long as it can be identified. And it does not matter in whose name the legal right stands. If money has been converted by a trustee or agent into a chose in action, the legal right to it may have been changed, but equity regards the beneficial ownership. It is conceded—for the cases abundantly show it—that, when the bank received the deposits, it thereby became a debtor to the depositor. The debt might have been paid in answer to his checks, and thus the liability have been extinguished, in the absence of interference by his principals, to whom the money belonged. But surely it cannot be maintained that when the principals asserted their right to the money before its repayment, and gave notice to the bank of their ownership, and of their unwillingness that the money should be paid to their agent, his right to reclaim it had not ceased. A bank can be in no better situation than any other debtor. * * * But it is insisted there was no earmark to the money. What of that, if the money can be followed, or if it can be traced into a substitute? This is often done through the aid of an earmark. But that is only an index enabling a beneficial owner to follow his property. It is no evidence of ownership. An earmark is not indispensable to tached to the thing itself, or it may be extraneous. It is freely admitted that if a trustee or agent receive money of a cestui que trust or principal, and mingle it with his own so that it cannot be followed, the cestui que trust or principal cannot recover it specifically. This is not because the ownership is changed, but because a court cannot lay hold of the property as that of the owner. But in regard to money, substantial identity is not oneness of pieces of coin or of bank bills. If an agent to collect money puts the money collected into a chest where he has money of his own, he does not thereby make it all his own, and convert himself into a mere debtor to his principal. The principal may by law claim out of the chest the sums which belonged to him before the admixture." It must be borne in mind that the controversy here is not one as to the right of the principal to a preference as against other creditors of an insolvent bank, in which the principal's money has been deposited by the agent in his own name; nor is it as to the right of the principal to follow the funds into the hands of a creditor or assignee of the agent who has received it without knowledge of the nature of the fund, and in extinguishment of some debt or obligation of the agent. The plaintiffs acquired no higher right by virtue of the garnishment under their attachment proceeding than that of their debtor, and if Crary was not entitled, as against intervener, to the money remaining in the bank to Crary's credit, after intervener had asserted and established his claim thereto, then plaintiffs have no right to the same fund by virtue of the garnishment proceeding. Howe v. Jones, 57 Iowa, 130, 8 N. W. 451, 10 N. W. 299; Shaver Wagon & Carriage Co. v. Halsted, 78 Iowa, 730, 43 N. W. 623. That the assignment from Hall to intervener entitled intervener to assert any right to the proceeds of the cattle which Hall could have asserted is unquestionable. Whether this assignment was legal or equitable is immaterial, for it gave Crary a right to the proceeds of the cattle—a right which the trial court, adjudicating the equitable issues arising under intervener's petition, should have recognized. Des Moines County v. Hinkley, 62 Iowa, 637, 17 N. W. 915. Indeed, it was wholly immaterial, so far as the rights of the parties in this case were involved, as to whether Crary had received notice of, and acquiesced in, the assignment, or not. No creditor of Crary, without any lien or claim as to this specific fund, had a right to appropriate it to the payment of Crary's debts, as against the conclusive proof that the fund did not belong to Crary at all, but belonged to some one else.

The decree dismissing intervener's petition is therefore reversed.

Digitized by Google

estate. Appellee insists that the remedies sought were inconsistent. Not so, for the title to the property was retained by the vendor as security, and all prayed was the allowance of that part of the debt not satisfied by retaking the articles on hand. As the contract fixed the price of the articles to be ordered returned, and for which credit should have been given, the evidence of the agent as to value was immaterial. No demand was essential prior to the application to the court for the order, nor was the company called upon to surrender its note until satisfied in the manner stipulated. An order should have been entered as prayed.

Reversed.

MANNING v. SPRY, County Treasurer, et al.

(Supreme Court of Iowa. Oct. 10, 1903.)

TAXATION—EXEMPTIONS—PENSION MONEY—INSANE PENSIONER.

1. Pension money paid to the guardian of an insane pensioner, and by him loaned, is in process of transmission to the pensioner, and still under control of the federal government (Rev. St. U. S. §§ 4766, 4783 [U. S. Comp. St. 1901, pp. 3286, 3297]; Rev. St. U. S. § 5486, as amended by Act Feb. 10, 1891, c. 130, 26 Stat. 746 [U. S. Comp. St. 1901, p. 3703]; Act June 30, 1890, c. 639, § 1, 26 Stat. 187; Act March 2, 1895, c. 193, § 1, 28 Stat. 964 [U. S. Comp. St. 1901, p. 3757]), and so is exempt from taxation, as a pension, under Code, § 1309, and Rev. St. U. S. 4747 [U. S. Comp. St. 1901, p. 3279].

Appeal from District Court, Wapello County; T. M. Fee, Judge.

Suit in equity to restrain the defendant treasurer from collecting a tax assessed against plaintiff, as guardian of one John Schwabkey, insane, on property held by him as such guardian, on the ground that the property was and is exempt from taxation. Defendants filed a demurrer to the petition, which was overruled, and, electing to stand on their demurrer, a decree was entered as prayed, and defendants appeal. Affirmed.

D. H. Emery, Co. Atty., and A. W. Enoch, for appellants. Mitchell & Hunter and S. E. Adler, for appellee.

DEEMER, J. The controlling facts, as gathered from the petition, are as follows: In the year 1889 one Blake was appointed guardian of the person and property of John Schwabkey, insane. He continued to act as such guardian until his death, in March of the year 1897. Thereupon plaintiff was appointed in his stead. The assessor of the city of Ottumwa, in Wapello county, listed and assessed against plaintiff moneys and credits to the amount of $4,500, and the board of supervisors levied taxes thereon amounting to over $300, which were regularly entered on the taxbooks of the county. In January of the year 1901 the defendant Spry, as county treasurer, entered on the taxbooks of the to something like $1,700. Quoting now from the petition: "(4) That the moneys so assessed, and on account of which said levees were made, were and are moneys paid to this plaintiff as guardian of said John Schwabkey, and to his predecessor in the guardianship, by the United States government, as a pension to said John Schwabkey, under the general pension laws of the United States, for and on account of physical disabilities received and sustained by the said John Schwabkey while a soldier in the regular army of the United States during the war of the Rebellion, and credits on which assessments were made and are made, and on account of which such levies were made, and were and are promissory notes taken and held by plaintiff for money loaned by him, the money so loaned being received by him and his predecessor in guardianship from the United States government on account of the pension allowed his ward as aforesaid. (5) That the United States government first allowed said John Schwabkey a pension on or about the 9th day of March, 1889, and on or about that time paid plaintiff's predecessor, as back and accrued pension due plaintiff's ward, $3,752. Afterwards, and on or about the 27th day of May, 1890, the government increased the rating of plaintiff's ward to $72 per month, and for him, on or about said time, paid to plaintiff's predecessor the sum of $11,244 as back and accrued pension due plaintiff's ward; and ever since said time plaintiff's predecessor and himself have received from the government $216 per quarter as pension from the government to their ward. That during all of the said time the said John Schwabkey has been insane and utterly helpless, and the expenses of his keep, care, attention, and medical attention, and the expenses of his guardianship, have largely exceeded any interest income that either the plaintiff's predecessor or himself could or have derived upon or from the aforesaid pension money by loaning out the same. That no part of the moneys have been used productively, other than being loaned out at interest, and the moneys and credits held now by plaintiff aggregate much less than the principal amount he and his predecessors have directly received from the government to their said ward; and their said ward does not now own, and has not owned since long prior to his being placed under guardianship, any money, property, or other valuable thing whatsoever, except the pension money received from the government, and promissory obligations taken for it when loaned out."

Plaintiff claims that these tax levies were each and all illegal and void, in that the moneys and credits were and are exempt from taxation under section 4747 of the Revised Statutes of the United States [U. S. Comp. St. 1901, p. 3279]. — also pleads that the

Digitized by Google

of the United States and the Constitution and statutes of this state; and that taxes levied under state laws upon pension moneys in the hands of a pensioner, and received by him, under the laws of the United States government, as a bounty on account of disabilities he received in the military service of the government, are in contravention of the sovereignty of the United States government, under the Constitution, in that they impair and burden the power of the government to reward for military or naval service by bounty or pension. The demurrer, of course, challenges each and all of these legal propositions, but admits the facts; hence we have to deal simply with the questions of law presented.

Section 4747 of the Revised Statutes, relied upon by the plaintiff, reads as follows: "No sum of money due or about to become due to any pensioner shall be liable to attachment, levy, or seizure by or under any legal or equitable process whatever, whether the same remains with the pension office, or any officer or agent thereof, or is in the course of transmission to the pensioner entitled thereto, but shall inure wholly to the benefit of such pensioner." And section 1309 of our Code reads in this wise: "The term credit as used in this chapter includes every claim or demand due or to become due for money * * * and all money or property secured by deed * * * mortgage or otherwise, but pensioners of the United States or any of them, or salaries or payments expected for services to be rendered are not included in the above term." Construing these sections together, it is manifest that pension money is exempt, not only from execution, but also from taxation, so long as it remains in the shape of money to meet the daily wants and necessities of the pensioner. This must be so, else it would not inure wholly to the benefit of the pensioner. Moreover, when we consider the nature and object of this bounty, it is clear to our minds that, were there no statute expressly exempting such funds, they should not be held subject to taxation. There is an old phrase to the effect that "the power to tax is the power to destroy." There are, perhaps, some limitations to this doctrine, which would materially modify or explain it, but for present purpose it must be accepted as a truism. A pension is a mere bounty or gratuity given by the government in consideration or recognition of meritorious past services rendered by the pensioner or by some kinsman or ancestor. The policy of granting the same has prevailed both here and in the mother country from a very early period, and no burden has been more easily borne or zealously guarded than this. The first Continental Congress, by act of August 26, 1776, provided for pensions for soldiers 1 Stat. 95, c. 24. Since that time a large number of general and special acts have been passed, and the government has been extremely liberal with those who have served it in time of need. The Constitution does not confer express power on Congress to pass such bills, but the right has been exercised under the grant of power to raise and support armies. As we view it, the power to grant pensions and bounties is inherent in government, and its exercise is demanded not only from the standpoint of policy, but from the higher considerations of gratitude and patriotism. The function has been assumed by the general government, and the matter is exclusively of federal cognizance, and beyond the plane of state control. The entire matter is vested in the Congress, and that body has created a bureau, and passed various acts with reference to the granting and control of pensions, which are complete and comprehensive. Not only has it been liberal in its allowance of pensions, but it has undertaken to guard and control them so that they shall inure wholly to the benefit of the pensioner. Courts are not agreed as to just when the federal government loses control, and the state may take it; but we have held, in construing section 4747 of the Revised Statutes, before quoted, that property purchased with pension money is exempt from levy and sale under execution. Crow v. Brown, 81 Iowa, 344, 46 N. W. 993, 11 L. R. A. 110, 25 Am. St. Rep. 501. This is a step in advance of most other jurisdictions. The rule generally is that such money is not exempt after it has reached the pensioner. See cases cited in Holmes v. Tallada, 3 L. R. A., at page 219, note, and McIntosh v. Aubrey, 22 Sup. Ct. 561, 46 L. Ed. 834. We quote the Crow Case simply to show the liberal construction we have placed on this statute. Aside from this, if the state were permitted to tax pension money, it could virtually destroy any bounty the government might see fit to bestow on its soldiers and sailors, and the guaranty that it should inure wholly to the benefit of the pensioner would be wholly destroyed.

If the pensioner in this case had been sui juris, and had held in his possession pension money received from the government, we do not think such fund would have been subject to assessment for taxation. Indeed, section 1309 expressly exempts it. Had he, instead of holding the money, loaned it out, and taken bonds or mortgages as security, it may be the state would have had power to tax these securities. But we do not decide that question. Adherence to the doctrine of Crow v. Brown case would result in a holding that such property could not be reached by legal process, for it would not inure wholly to the benefit of the pensioner. And if this be true, it would doubtless follow, as a nec-

Digitized by Google

ulate on this phase of the case, for there are other considerations which, to our minds, are decisive of it. As the pensioner was laboring under a disability, he has never received this pension money, unless it be held that payment to his guardian was payment to him, and that he has had the full benefit thereof. As this matter of pensions is regulated wholly by the federal government, we must look to the acts of Congress, to determine the authority of a guardian with respect to pension money.

Section 4766 of the Revised Statutes of the United States reads as follows: "Hereafter no pension shall be paid to any person other than the pensioner entitled thereto, nor otherwise than according to the provisions of this title; and no warrant, power of attorney, or other paper executed or purporting to be executed by any pensioner to any attorney, claim agent, broker or any persons shall be recognized by any agent for the payment of pensions; nor shall any pension be paid thereon, but the payment to persons laboring under legal disabilities may be made to the guardians of such persons in the manner herein prescribed and pensions payable to persons in foreign countries may be according to the provisions of existing laws: provided, that in case of an insane invalid pensioner having no guardian, but having a wife or children dependent upon him, (the wife being a woman of good character) the commissioner of pensions is hereby authorized, in his discretion, to cause the pension to be paid to the wife upon her properly executed voucher, or, in case there is no wife, to the guardian of the children, upon the properly executed voucher of such guardian, and in like manner to cause the pension of invalid pensioners who are or may hereafter be imprisoned as punishment for offenses against the laws, to be paid while so imprisoned to their wives or the guardians of their children."

And the penal laws relating to embezzlement of pension money are copied below:

"Sec. 4783. Every guardian having charge and custody of the pension of his ward who embezzles the same in violation of his trust or fraudulently converts the same to his own use, shall be punished by fine not exceeding two thousand dollars, or imprisonment at hard labor for a term not exceeding five years, or both."

"Sec. 5486. If any guardian having the charge and custody of the pensions of his ward shall embezzle the same in violation of his trust, or fraudulently convert the same to his own use, he shall be punished by a fine not exceeding two thousand dollars or imprisonment at hard labor for a term not exceeding five years, or both, at the discretion of the court."

The above-mentioned section was amended

Every guardian, conservator, curator, committee, tutor, or other person having charge or custody in a fiduciary capacity of the pension of his ward, who shall embezzle the same in violation of his trust or fraudulently convert the same to his own use, shall be punished by a fine not exceeding two thousand dollars or imprisonment at hard labor for a term not exceeding five years, or both at the discretion of the court." Act Feb. 10, 1891, c. 130, § 1, 26 Stat. 746. In reviewing these and kindred Sections of the acts of Congress, the United States Supreme Court, in U. S. v. Hall, 98 U. S. 343, 25 L. Ed. 180, held that a guardian appointed under state authority, to whom pension money was paid, is nothing more than an agent for the government, and that money in his hands is still under its control and management. Indeed, guardians appointed under state laws are required to make report to the commissioner of pensions of their acts and doings with reference to pension money received by them. In the Hall Case it is held that a guardian appointed under state authority is not bound to accept pension money, and that, if he does, he is amenable to the laws of Congress. This being so, it is clear, we think, that the money has not passed into the hands of the pensioner, although paid to his guardian, and by him loaned out for safekeeping, and to secure some return therefrom. So long as the fund remains subject to the control and jurisdiction of the federal government, the state has no right to impair, direct, or control it. It is doubtful if a guardian could be punished by the state courts for mismanagement of pension money. He is amenable to the general government, and in handling pension money he acts as a government official or agent, and not primarily for the court appointing him. The commissioner of pensions has held that pension funds in the hands of a guardian, which have not been paid to the pensioner or expended in his behalf in accordance with law, are in the nature of an accrued pension, and do not pass to his representatives upon his death, but are to be disposed of as provided in the act of Congress of June 30, 1890, reading as follows: "Provided further, that hereafter whenever a pension certificate shall have been issued and the pensioner mentioned therein dies before payment shall have been made, leaving no widow and no surviving minor children, the accrued pension due on said certificate to the date of the death of said pensioner may, in the discretion of the Secretary of the Interior, be paid to the legal representatives of said pensioner." Act June 30, 1890, c. 639, § 1, 26 Stat. 187. And of Act March 2, 1895, c. 193, § 1, 28 Stat. 964 [U. S. Comp. St. 1901, p. 3257], reading as follows: "Such accrued pensions shall not be considered a part of the assets of the estate of the deceased person nor be

Digitized by Google

liable for the payment of the debts of said estate in any case whatsoever but shall inure to the sole and exclusive benefit of the widow or children. And if no widow or child survive such pensioner and in the case of his last surviving child who was such minor at his death, and in case of a dependent mother, father, sister or brother no payment whatsoever of the accrued pension shall be made or allowed except so much as may be necessary to reimburse the person who bore the expense of their last sickness and burial, if they did not leave sufficient assets to meet such expense. And the mailing of a pension check, drawn by a pension agent in payment of a pension due to the address of a pensioner shall constitute payment in the event of the death of the pensioner subsequent to the execution of the voucher therefor." This, it seems to us, is the result which logically follows from the Hall Case. The guardian does not receive the pension as of right. Indeed, as we understand it, the government may, and frequently does, withhold pensions from one under guardianship. If a guardian does receive it, he is amenable to the department for its care and disposition. This being true, it has not reached the beneficiary until actually paid to him or expended for his benefit. While in the guardian's hands, he is a mere trustee or depositary for the general government, and the fund, no matter what its form, is not subject to taxation. In so far as the pensioner is concerned, it is still a pension, within the meaning of section 1309 of our Code.

Appellants' counsel present an ingenious argument in favor of the taxation of these credits, but it is wholly bottomed on the thought that when the money was paid to the guardian it was the same, in law, as a payment to the pensioner. If that were true, there would, of course, be much reason for saying that as he had loaned the money, and was not using or intending to use it for his ward's daily necessities, he should pay his proportion of the taxes for the protection afforded his property. Here lies the fallacy, as we view it. The money has not, under the rulings of the pension department, reached the pensioner. It is being held by the guardian as a trustee, and is in process of transmission until actually paid to the pensioner, or expended for his benefit. This being true, it is not subject to taxation.

The decree is right, and it is affirmed.

WHITE & HOSKINS v. BENTON.

(Supreme Court of Iowa. Oct. 16, 1903.)

BROKERS—AGENCY—TERMINATION—SALE BY PRINCIPAL—NOTICE—NECESSITY—EXCLUSIVE AGENCY—EVIDENCE.

1. Where an owner of land listed the same for sale with plaintiffs as well as other brokers, reserving the right to sell the same himself, and it was understood that plaintiffs should not be entitled to commissions unless they found a purchaser before the land was sold by the owner or some other broker, a sale thereof by the owner operated to terminate plaintiffs' agency to sell the land, without notice of the sale by the owner.

2. Where an owner of land had listed the same for sale with plaintiffs and other brokers, reserving the right to sell the same himself, and it was understood that the plaintiffs were not to be entitled to commission unless they were the first to procure a purchaser, the fact that, on the owner's notifying plaintiffs that he would take a reduced price for the land if sold by a certain day, plaintiffs replied that they would find a purchaser before night of the following day, to which the owner replied that, if they did, their commission was ready, did not constitute an agreement suspending defendant's right during such time to sell the land himself and relieve himself from liability for commissions.

3. Such conversation did not operate to give plaintiffs the exclusive agency for the sale of the land for such period.

Appeal from District Court, Calhoun County; S. M. Elwood, Judge.

Action by plaintiffs, who are real estate brokers, to recover a commission on real estate. Trial to the court, and judgment for plaintiffs. Defendant appeals. Reversed.

F. F. Hunter and J. F. Lavender, for appellant. M. W. Frick and W. E. Gray, for appellees.

BISHOP, C. J. The facts are not in dispute. Defendant was the owner of a tract of land in Calhoun county, and had listed the same with plaintiffs for sale, the price being fixed at $65 per acre, and the agents' commission agreed upon being $1 per acre. He had listed the same property with several other real estate agents or brokers at the same price, and of this the plaintiffs had full knowledge. Defendant also reserved the right to himself to make a sale if he found an opportunity or saw fit to do so. Matters stood in this condition until September 25, 1901, when defendant notified plaintiffs that, if a purchaser was found by the following Monday, September 30th, he would take the sum of $6,250 for the land. It is made to appear that plaintiffs informed the defendant that at the price named they would find him a purchaser for the land before night of the following day, to which defendant at the time responded, "If you do, your commission is ready." That evening, before going to his home, three or four miles in the country, defendant by himself made a sale of the land. He at once went to the office of plaintiffs to advise them of the fact, but did not find them in, and went home. The next morning plaintiffs found a purchaser for the land, who was able and willing to take the same at the price named, and one of the plaintiffs drove out to the residence of defendant shortly before noon, and reported that such purchaser had been found. He was then advised by defendant of the sale of the evening previous. One contention made by plaintiffs in the court below, and such is now made by their counsel in this court, is that, having found a pur-

Digitized by Google

chaser for the land before notice of the sale by defendant, they are entitled to recover the commission agreed upon. And it is said that under the ordinary contract of agency with a real estate broker notice to the broker is necessary to revoke such agency; that there is no implied contract that a sale by the principal shall, without notice to the broker, operate as a revocation of the agency. We are not prepared to admit the soundness of the doctrine thus contended for. Certainly the great weight of authority is against it, and we think it has no support in reason. It would not be possible, within the limits of this opinion, to take up and discuss the many authorities cited and relied upon by counsel for appellees. It will be sufficient to make clear our views to call attention to a few of the authorities which we regard as controlling upon the subject. See Story on Agency, § 481; Mechem on Agency, § 220; Ahern v. Baker (Minn.) 24 N. W. 341; Goldsmith v. Cook (Com. Pl.) 14 N. Y. Supp. 878; Gilbert v. Holmes, 64 Ill. 548. We quote from Story as follows: "A revocation by operation of law may be by a change of condition or of state producing an incapacity of either party. This proceeds upon the general rule of law that the derivative authority expires with the original authority from which it proceeds. The power of continuing an agency is founded upon the right of the principal to do the business himself; and when that right ceases the right to create an appointment or continuing the appointment of an agent already made for the same purpose must cease also. In short, the derivative authority cannot generally mount higher or exist longer than the original authority." In Ahern v. Baker, which, like the one before us, was an action to recover real estate commissions, it is said: "A revocation may be shown by the death of the principal, the destruction of the subject-matter, or the determination of the estate by a sale, as well as by express notice. The plaintiff had the right to employ several agents, and the act of one in making a sale would preclude the other without any notice, unless the nature of his contract with them required it. In dealing with the agent the plaintiff took the risk of the revocation of his agency." In that case the sale was made by another agent. With the statement of the rule thus made we are satisfied. And it seems to us that plaintiffs are in no position to complain because of an enforcement of such rule as against them. Moreover, as we understand it, such a result was directly contemplated by their contract. They listed the lands upon their books, and went about finding a purchaser therefor, with a full understanding that they were to have nothing unless they found an acceptable customer. They also knew full well that other agents had the property listed, and were seeking a customer therefor, and that defendant himself retained the right to find and deal with a customer should he be able to do so. Now, clearly, they took the chances of being able to present themselves with a customer ahead of the other agents, and before defendant himself found one, and thus earn the promised commission. Turning the proposition about, they took the chances of a sale being made to a customer brought forward by some other agent, or to one of the defendant's own finding. Defendant occupied the position, and no other, of saying to the several agents with whom he had listed his land that, if any one of them should bring to him a customer for his land before he should sell it himself, he would pay a commission; otherwise none would be paid. This is the sum and substance of the contract under which plaintiffs went to work, as shown by the record made upon the trial. Now, it is possible that, where agents are employed, as were these plaintiffs, to sell lands, and a sale takes place, of which they are not at the time notified, they may recover the value of labor performed, or the amount of expense incurred, between the time when the sale took place and the time when notice thereof was given to them. Such, however, is not the case before us, and we do not, therefore, determine such question.

But counsel for appellees makes the further contention that what transpired between the parties on September 25th amounted to an express promise and undertaking on the part of defendant to pay plaintiffs a commission if they found a purchaser on the day following, regardless of whether a sale was in the meantime made by defendant or by any other agent. With this contention we are also unable to agree. There was no new or further contract. Defendant announced a reduction in price. Plaintiffs declared that they could find a customer at the reduced price within a day's time. Defendant said that if they did their money was ready for them. Surely, counsel do not seriously contend that here was any new contract, or even any modification of the old contract. Plaintiffs could only earn a commission by finding a customer, and they would be entitled to their commission whether they found one within a day's time or a month's time, the agency not having been sooner revoked. The defendant would have been bound to pay the stipulated commission whether the customer was found within the next day or within the next month, the contract continuing in force. The only modification was that within the time limit fixed a sale might be made at the reduced price named. Nor is there anything in what was said or done to indicate that it was intended to give to plaintiffs an exclusive agency, so that it is not necessary for us to consider whether an exclusive agency would result in a liability on the part of defendant, in any event, should a customer be found by plaintiffs within the time mentioned by them.

We conclude that the trial court erred in

Digitized by Google

giving judgment to plaintiffs, and such judgment is reversed, and the cause is remanded for further proceedings according to law. Reversed.

GERMAN TRUST CO. v. BOARD OF EQUALIZATION OF CITY OF DAVENPORT TP.

SAME v. CITY OF DAVENPORT et al.

(Supreme Court of Iowa. Oct. 16, 1903.)

TAXATION—POSSESSION OF PROPERTY BY AGENT—LIABILITY OF AGENT—STATUTES—CONSTRUCTION—VALIDITY.

1. A company which has in its possession notes and mortgages executed to it, and by it assigned to third persons under assignments stipulating that the notes and mortgages shall remain with it for safe-keeping and collection, and that it shall retain all interest in excess of a specified per cent. as compensation for its services, is an agent within Code, § 1320, providing that any person acting as agent of another, and having in his "possession or under his control or management" any money, notes, credits, etc., of such other person "with a view to investing or loaning or in any other manner using or holding the same for pecuniary profit for himself or the owner," shall list the same for taxation.

2. A company which has in its possession notes and mortgages executed to it, and by it assigned to third persons, but deposited with it for collection, and which pays taxes thereon under Code, § 1320, providing that such agents shall be personally liable for the taxes on the property in their possession, has a lien on the notes and mortgages for the taxes so paid.

3. As the agent paying taxes on the property in his hands as agent has a lien thereon for the amount of the taxes so paid, Code, § 1320, making agents having the possession or control of property belonging to others personally liable for the taxes thereon, is not unconstitutional, as depriving the agent of his property without due process of law, and denying to him the equal protection of the law.

4. Code, § 1312, requires every "inhabitant of the state" not under disability to list for taxation all property of which he is the owner or has the control or management. Section 1313 provides that credits and moneys are to be listed where the owner resides. Section 1350 provides that personal property shall be listed in the name of the owner. Section 1360 makes it the duty of the owner to furnish the assessor a list of money and credits owned by him. Section 1320 provides that any person acting as agent of another, and having in his possession or under his control the money, notes, credits, etc., of such other person, shall list the same for taxation, and declares that the agent shall be personally liable for the taxes on the same. *Held* that, as resident owners are required without reservation to list their moneys and credits, section 1320 is applicable only to cases where a resident agent has possession of property belonging to nonresidents of the state.

5. A city charter which empowers the city "to levy and collect taxes on all taxable property," but which does not specifically provide whose duty it shall be to list property with the assessor, nor point out in terms on whom the obligation to pay taxes is imposed, necessarily implies that the duty rests on the owner, which includes a resident agent having possession and control of taxable property of a nonresident of the state.

6. Code, § 1011, relating to cities under special charters, and providing that all the property of individuals, companies, copartnerships, and corporations shall be listed by the assessor for city taxation, and it shall be the duty of the owner, officer, agent, or individual having control of the same to assist the assessor in listing the same, makes section 1320, providing for the taxation of property in the hands of agents, applicable to cities under special charter.

Appeal from District Court, Scott County; P. B. Wolfe, Judge.

The opinion states the case. Modified.

Lane & Waterman, for appellant. Fred W. Neal, for appellees.

WEAVER, J. The German Trust Company, doing business at Davenport, Iowa, was by the assessor of the township assessed for taxation upon the sum of $800,000, moneys and credits alleged to be in the possession of said company as the agent of others. A similar assessment for the same year was made to the city assessor for taxation for city purposes. The board of equalization having in each instance refused to cancel the assessment, the company appealed to the district court, by which said assessments were confirmed in the sum of $636,650, and from this judgment the company appeals.

The facts are not involved in any material dispute, and may be stated as follows:

(1) On January 1, 1902, the appellant company had in its possession promissory notes and mortgages aggregating $636,650, which had been executed to said company by third persons, and by it assigned to customers or clients desiring such investments.

(2) In each instance the assignment was made to such client or customer, and the possession of the securities was retained by the appellant under a written agreement, the substance and terms of which are indicated by the following blank form, which was employed in said transactions:

"Receipt and Memorandum of Sale.

"The German Trust Company, of Davenport, Iowa,

"In consideration of the payment of ..... Dollars, has this day sold to ..... the following Mortgage Note, to-wit:

No. of Loan, Amount, $

Principal ..... Dollars.

Name of Maker.....

Date of Note.....

When Due .....

Interest Payable .....

"Secured by first Mortgage on..... being ..... acres in ..... County, Iowa, on condition as follows:

"Said note, and papers belonging thereto, shall remain deposited with the said German Trust Company, for safe keeping and collection.

"The German Trust Company shall receive and retain all interest in excess of ..... per cent. collected on said note as compensation for its services, also the interest accrued to this date, amounting to $..... and belonging to said Trust Company.

Digitized by Google

"Interest and principal when collected to be placed to the credit of said (assignee) ..... with the German Savings Bank, of Davenport, Iowa.

"The German Trust Company reserves the right and privilege to repurchase said Note and Mortgage at its face and interest at maturity, or before, upon default by the maker in payment of interest or any condition contained in the mortgage."

(3) In each instance the appellant retained or reserved to itself the interest which had accrued upon the security sold to the date of the assignment and a share of the interest thereafter to accrue upon the principal—usually one-half of 1 per cent. per annum. The notes, as a rule, were payable in installments, at the option of the maker.

(4) Under said contract appellant attended to the collection of the notes, looked after the insurance of property covered by the mortgages, and, in case of sale of any of the mortgaged lands for delinquent taxes, bid them in for the protection of the security.

(5) Of the $636,650 in securities so held by the appellant the sum of $418,950 was owned by residents of Scott county, Iowa, and the remaining $217,700 by nonresidents of the state.

The appeals taken by plaintiff from the general assessment and from the assessment for city purposes have been submitted together, and will both be considered in this opinion.

1. The assessment in question was evidently made upon the theory that the facts as above recited call for an application of the provisions of section 1320 of the Code. That section reads as follows: "Any person acting as the agent of another and having in his possession or under his control or management, any money, notes, credits or personal property belonging to such other person, with a view to investing or loaning or in any other manner using or holding the same, for pecuniary profit for himself or the owner, shall be required to list the same at the real value, and such agent shall be personally liable for the tax on the same, and if he refuse to render the list and swear to the same, the amount of such money, property, notes or credits, may be listed and valued according to the best knowledge and judgment of the assessor." It is argued by appellant that "or," where that word first occurs in said section, is to be construed as "and," thus making it necessary that moneys and credits, in order to be taxable to the agent, must not only be in his possession, but under his control and management as well. This construction is said to be required on account of the absurd and unjust results which must follow from a literal application of the statute as written. A literal interpretation, it is said, would make the man who temporarily holds the money of another for safe-keeping, the lawyer or banker who holds a note for collection, and every person who for any purpose chances to have the physical possession of moneys or securities belonging to another, liable to taxation thereon; thus leading to gross hardships to many persons who have no means of protecting or reimbursing themselves. The statute will not, in our judgment, bear such a construction; nor does there seem to be any occasion for resorting to the violent, but sometimes allowable, expedient of reading into a word used by the Legislature a signification or meaning which it does not usually bear. The word "possession" as well as the words "control" and "management," as employed in section 1320, are each and all limited and qualified by the remainder of the section in which they are found. Reading the entire provision, we find that, to justify the assessor in requiring one person to list the property of another, several facts must be shown: First, agency of the party listing; second, possession or control by the agent of the moneys, notes, or credits of his principal; and, third, such possession or control must be held by the agent with a view to investing or loaning or in some other manner holding or using the same for the pecuniary profit of himself or of his principal. Hence, in the hypothetical cases stated by counsel, there can be no liability because of the absence of the third essential fact element above noted. No agent is liable to taxation for the property of another in his possession or under his control, unless he holds that possession or is vested with that control for the particular purposes named in the statute. Such being the case, we have, then, so far as this point is concerned, simply to ask whether the appellant's possession of the moneys listed by the assessor is of the character contemplated by the statute. That inquiry, we think, must be answered in the affirmative. It may be conceded, perhaps, that under the peculiar form of contract between appellant and its clients it does not appear to hold the securities for the purpose of reloaning or reinvesting the moneys collected thereon; but it is quite clear it does hold the same in its possession and control for the pecuniary profit of the said clients and of itself. The profit accruing to both parties is that which is usual in that class of investments—the interest accruing upon the securities handled. The money originally loaned belonged to appellant. By the contract of assignment appellant received an amount equal to the principal sum invested, and retained a share of the earnings upon the original loan. Both assignor and assignee have a direct property interest in the security; but the former retains the right of manual possession and control. Appellant's agency is coupled with an interest, and the assignee cannot, under the terms of the contract, deprive his agent of the possession of the property. Both parties reap a financial profit out of the transaction. The principal puts his money into the purchase of the se-

Digitized by Google

curity, subject to the reserved interest and right of the agent. The latter retains the absolute right to keep the security in its own possession, and undertakes to collect and account for the proceeds. When collection is made, the principal is to receive back the original face of the security, with the major part of the interest accruing from the date of his purchase, while the agent retains all the interest accrued at the date of the purchase, and a minor fraction of the interest thereafter earned. It would be difficult to create an agency coming within the meaning of the statute if this be not one. Counsel say, however, that the "possession" and "control" mentioned in section 1320 have no reference to securities or written instruments, but to the moneys which they represent; and, as the contract of assignment does not empower the appellant to loan or invest such moneys when collected, the statute is not applicable. This construction leads to a manifest disregard of the expressed legislative intent. The language of the act is clear and unequivocal. The duty to list the property for taxation is enjoined upon the agent who has in his possession or under his control either "money, notes, credits, or other personal property" belonging to another, "with a view to investing or loaning or in any other manner using or holding the same for the pecuniary profit" of himself or principal. Appellant did "hold" the "notes and credits" listed by the assessor, and did have such "control" of the same that the assignees could not demand their surrender or deprive appellant of the right to make the collection thereon, and, as we have seen, the one purpose of this arrangement was the pecuniary profit arising therefrom to the principals and to their agent. It is also argued for appellant that this construction of the statute works a manifest injustice, in that the tax is made a personal charge against the agent, but affords him no remedy by which he may be reimbursed for the expenditure thus incurred. Counsel say: "If plaintiff had been a trustee, vested with the legal title to the property, it could doubtless repay itself for taxes advanced; or perhaps it could do so if it held such quasi title as is conferred by a right of control and management. But not so under the facts here." We think, however, the facts do bring the case fairly within the concession of counsel. Plaintiff, as we have already seen, had not only the "quasi title conferred by a right of control and management," but it had absolute title to a fractional interest in each security, coupled with a right to hold the entire security in its own possession until the debt was collected. If, then, while holding such possession, the agent or co-owner advances the money necessary to satisfy a legal charge against the common property or the property of the principal, the law will give him a lien thereon for his reimbursement. "The agent in general has a particular right of lien for all his expenditures, losses sustained, and services in and about the property or thing intrusted to his agency, whenever they are proper or necessary or incident thereto." 1 Am. & Eng. Ency. Law (2d Ed.) 1119. This conclusion necessarily disposes of the further contention that the statute is unconstitutional as depriving plaintiff of its property without due process of law, and denying to it the equal protection of the law.

2. Assuming the nature of the agency referred to in Code, § 1320, to be as we have indicated in the preceding division of this opinion, we come to the more difficult question whether it was appellant's duty to list for taxation the entire $636,650, of which it had possession, or only the $217,700 which it held for nonresidents. If we are to follow the literal terms of this section of the statute without reference to other provisions, there is no room for escape from the conclusion arrived at by the trial court. The command is broad and general, and does not in itself provide for any exception. Nevertheless, section 1320 contains but one of the many provisions which the Legislature has enacted concerning the assessment and taxation of property. Title 7 of the Code of 1897, with amendments since made, embodies a comprehensive plan for levying and collecting the public revenues, and, while seeking to compel every form of property to bear its just proportion of the public burden, it manifests equal solicitude to avoid the injustice and oppression which would result from double taxation. It is notorious that certain forms of property—more particularly moneys and credits—often elude the assessor, and that more or less inquisitorial proceedings are necessary to counteract the craft and strategy by which such assets are frequently shifted from hand to hand, or concealed or withheld from the view of the taxing officers. To remedy this evil, and to insure that all moneys and credits held within its jurisdiction demanding and receiving the protection of its law shall contribute to the cost of the benefits thus enjoyed, the statute has provided various checks or guards, of which section 1320 is but one. In construing and applying them, each must be read and considered in the light of the others. A provision which, standing alone, would admit of but one meaning, may have a materially enlarged or restricted significance when used in connection with the entire statute of which it forms a part. Reading the Code title on taxation, we find (sections 1303 to 1310, inclusive) that, subject to a few specific exemptions, all property of every kind and nature, including credits, whether witnessed by writing or otherwise, is made taxable. By section 1312 the duty is laid upon every "inhabitant of the state" not under disability to list for taxation "all property" of which he is the owner or has the control or management as therein directed. The "control or management" here mentioned is evidently explained or de-

Digitized by Google

fined by the latter clause of the same section as that which is exercised by a person having legal charge or control of property in trust or acting for one who is under disability. By section 1313 moneys and credits are to be listed where the owner resides, and, when read in connection with the preceding section, it seems scarcely open to question that the listing is to be by the "owner," and by no one else, if he be a resident, and not under disability. This is rendered still clearer by reference to section 1311, which allows any person required to list moneys or credits to deduct from the aggregate thereof the gross amount of his own bona fide indebtedness. Section 1350 provides that personal property shall be listed in the name of the owner. Code Supp. 1902, § 1360, makes it the duty of the owner to furnish the assessor a list of moneys and credits showing separately the aggregate amount of his notes, bonds, and other evidences of credit, and to make oath that such list is a full, true, and correct statement of "all moneys and credits owned" by him. Refusal to furnish such list or make such oath when required is made a misdemeanor. Section 1357. These provisions, taken together, prescribe and emphasize the duty of every resident owner to list all his moneys and credits without reservation, and if such owner, in making his list, should omit or refuse to include moneys and credits owned by him in the hands of agents, he would be chargeable with an evasion of his statutory obligation, unless, indeed, section 1320, already quoted, has the effect to relieve him therefrom. The holding of the court below, as we understand it, gives this effect to said section. It proceeds upon the theory, reasonable in itself, that the Legislature did not intend to require an owner to list moneys and credits held by his agent, and at the same time require the agent to list the same property, and be personally liable for the taxes thereon. To avoid this confusion and prevent the injustice arising from double listing and taxation, that court adopted the following construction of the statute, which we quote from its opinion found in the record: "There is an apparent conflict in these sections, and it is the duty of the court to harmonize them if it can do so, for, as they were adopted at the same time, they are to be construed together. The first requires the owner to list all of his property subject to taxation within the state. The second requires the property to be assessed where the owner lives. The third requires the agent to list any money, notes, or credits in his possession or under his control or management, and results in double taxation if the owner and the agent has to list the property and it is to be assessed to each. But in the construction of statutes the words 'and' and 'or' are convertible, as the sense may require. William v. Poor, 65 Iowa, 410–415, 21 N. W. 753. If we make these sections to read, 'Every inhabitant of this state, of full age and sound mind, shall list for the assessor all property subject to taxation in the state of which he is the owner and has the control and management, in the manner herein described, and moneys and credits, notes, bills, bonds and corporate shares and stocks, not otherwise assessed, shall be listed and assessed where the owner lives, and any person, acting as the agent of another, and having in his possession, and under his control and management, and money, notes and credits,' etc., 'shall be required to list the same at the real value,' etc., such a construction will, in my judgment, harmonize all parts of said statute, and not subject any property to double taxation. It will require the owner, where he has the control, to list it, and the agent, when he has the control and management, to list it; and it would be better so, as the agent, when he has the property in his possession and control, will be in a better position than the owner to know its true value." If this construction be approved, it divides the responsibility of listing moneys and credits between the resident owner and his agent, and permits the former, when listing his property to the assessor and making oath to the same, to mentally reserve and withhold therefrom all his moneys and credits which may happen to be in the possession or control of an agent. The exception thus read into the statute neutralizes in a large measure the force and effect of the numerous and specific requirements to which we have called attention as being designed to secure from every resident the fullest and most complete disclosure of all his taxable property.

No reason is suggested for imposing upon the agent the duty of listing moneys and credits in his hands when the owner is within the jurisdiction of the state, save the suggestion that the former is "in a better position than the owner to know their true value." In exceptional instances this may be true, but there is nothing in the nature of the case to indicate that such is the general rule. Ordinarily, every man is presumed to have some intelligent conception of the fair value of any item of property owned by him. On the other hand, even if we concede the superior qualification of the agent to estimate the value of securities in his hands, he cannot be presumed to know anything of the amount of deduction, if any, to which the owner may be entitled on account of his indebtedness. Again, the place where the assessment shall be made is one of importance both to the public and individual owner. If, for instance, one of appellant's clients resides in a country township, where the rate of taxation is materially less than in the city of Davenport, the assessment of his moneys and credits in the city, instead of the place of his residence, as provided by law, unjustly increases his burden of taxation, and at the same time deprives his local

Digitized by Google

taxing district of a part of its rightful revenues. Dividing the responsibility for listing one's moneys and credits would be illogical in operation, and open the door to evasion of taxes. The owner of moneys and credits—no matter how great in value—may, for reasons legitimate or otherwise, place the great bulk of his furtune in the hands of an agent for investment. That agent may reside in another taxing district of the state, or may be a local banker or a next-door neighbor, or may occupy a desk in the same office with his principal, yet the rule followed by the lower court would absolve such owner from listing the property thus held by another for his benefit, and leave the assessment and payment of the taxes thereon to depend upon the honesty and personal responsibility of the agent, who may be entirely insolvent. In the absence of language clearly requiring it, we should avoid any construction of the statute leading to such results, or liable to induce such abuses. In the natural and proper order of things it is the owner who, if within the jurisdiction of the state, should list his property for taxation. He alone can know or reveal to the assessor the extent and description of his taxable estate, whether the same be in his own hands or in the hands of agents. He alone knows the extent of his bona fide indebtedness, if any. Upon him alone, under all ordinary circumstances, devolves the duty to pay the taxes levied on his property. This, as we read it, is also the theory of the statute. When, however, the owner of moneys and credits taxable here is a nonresident, and therefore not subject to visitation or examination by the assessor, his resident agent having control of the funds is by section 1320 of the Code made to stand in the place of his principal, and is held to the same measure of obligation. Giving this meaning to said section, and restricting its application to agents of nonresidents, we avoid the conflict of which the trial court speaks, and effectuate the evident intent of the Legislature. The statute seeks to find persons within the state who may be made chargeable for the listing of all personal property. Real estate may be assessed to an unknown owner, and the tax enforced, without discovering the identity of such owner. Not so with moneys and credits. The assessment must be made to some named individual—the owner, if an inhabitant of the state; but, if he be a nonresident, then the resident agent found in the possession or control of the property. It is true, the language of section 1320, standing alone, is, as we have said, broad enough to include all agents; but, the statute having already and in the same connection provided for the complete listing of the property of residents by the owners in person, the safe assumption that the Legislature did not intend to require the same property to be listed by and taxed to two different persons forbids that it be extended to include agents of resident principals. It follows, therefore, under the conceded facts in the case, that the assessment to appellant of the $418,950 of securities held for residents of Scott county was unauthorized.

3. The case made by appellant against the assessment for city purposes is identical with the one disposed of in the preceding division of this opinion, except the point made that Davenport is organized under special charter, and that there is nothing in that instrument or in the statute which authorizes the assessment of property to an agent. We do not regard the objection as sound. The power of taxation conferred by the charter is in general terms "to levy and collect taxes upon all taxable property." It does not specifically provide whose duty it shall be to list property with the assessor, nor point out in terms upon whom the obligation to pay the taxes is imposed. But it is a necessary implication, arising from the very nature and purpose of taxation, that the duty rests upon the owner; and it is no undue enlargement of that implication to say that a resident agent having possession and control of taxable personal property belonging to a nonresident of the state, is an owner within the meaning of that provision. But we are not left to rely upon this construction, for Code, § 1011, relating to cities under special charter, provides: "All the property of individuals, companies, co-partnerships and corporations, shall be listed and returned by the assessor for city taxation; and it is the duty of the owner, officer, agent or individual having control of the same to assist the assessor in listing the same, and the penalties for his neglect or refusal so to do shall be as provided in title 7 of this Code, so far as the same may be applicable, and not in contravention of any of the provisions herein, or of the charters of such cities; but the equalization of all assessments shall be made by the council as provided by ordinance or the charters of said cities." It is objected that this does no more than prescribe the duties of the agent, but gives no power to exact taxes from him upon property held for his principal. But section 1320 is a part of title 7, and by its terms the agent is required not only to list the property, but to pay the tax. So far as the state or city is concerned, he stands as owner of the property, charged with the statutory duty both to list and to pay, and the effect of section 1011 is to make section 1320 applicable in all its essential features to cities under special charter.

The conclusion announced in the first division of this opinion is therefore decisive of the appeal from the city assessment. It is therefore ordered that the assessment in each case be reduced from $636,650 to $217,700, and that, as thus modified, the judgment of the district court be affirmed, and that appellant recover costs.

Modified and affirmed.

Digitized by Google

(Supreme Court of Iowa. Oct. 15, 1903.)

MUNICIPAL CORPORATIONS — CONTRACT FOR WATERWORKS — COMPLIANCE WITH STATUTORY PROVISIONS — ORDINANCES — VALIDITY—HYDRANT RENTAL—LIMIT OF AMOUNT —LIMITATION.

1. A city council which unanimously voted in favor of granting to an individual the right to establish a system of waterworks on the terms and conditions proposed by him complied with Code 1873, § 471, providing that no waterworks shall be authorized until a majority of the voters at a general or special election, or four-fifths of the members of the council, by vote, approve of the same.

2. A city council which votes that it at once close a contract with an individual for the establishment by him of a system of waterworks does not authorize the mayor to enter into a contract with the individual for the establishment of the works.

3. A city council which, after voting to close a contract with an individual for the establishment of a system of waterworks, receives in silence the report of the mayor that he has entered into a contract with the individual for the establishment of the works, does not thereby ratify the unauthorized contract made by the mayor.

4. Under Code 1873, § 489, providing that all ordinances shall require for their adoption the concurrence of a majority of all the trustees of the municipality, an ordinance unanimously adopted by a city council composed of nine members, at a meeting at which eight were present, was adopted at a meeting at which the requisite number of members were present to adopt it.

5. The question of the number of the members of a city council required to be present at a meeting to adopt an ordinance granting to a water company the right to lay water pipes in the streets, to supply the city and its inhabitants with water, conferring on it the right of eminent domain, providing for the payment by the city of rent for hydrants, is determined by Code 1873, § 489, providing that all ordinances shall require for their adoption a majority of all the members of the city council, and not by section 471, providing that no waterworks shall be authorized except by a four-fifths vote of the council.

6. The minutes of a meeting of the city council which showed that eight of the nine members were present, that on the question of the adoption of an ordinance the roll was called, and that the vote was unanimous in favor of its adoption, being, in effect, minutes showing that each individual member present, naming him, voted yea, and nays none, were sufficient, within the statute requiring, on the question of the adoption of an ordinance, a roll call and a record of the yeas and nays.

7. Under Code 1873, § 489, providing that no ordinance shall contain more than one subject, which shall be expressed in the title, an ordinance the title of which is to enable a waterworks company to lay its mains and pipes within the limits of a city and to condemn private property, which not only grants the right to lay mains and to condemn property, but also provides for the payment to the company of rentals for hydrants, for the annual levy of a special tax therefor, for the collection of water rents from private consumers, and for the purchase of the works by the city at its option after 25 years, is invalid.

8. Where a city, empowered to authorize the construction of a system of waterworks, adopted an ordinance granting to a water company the right to lay water mains in the streets, providing for the payment by the city to the company of rentals for hydrants, conferring on the faith that the ordinance was valid, and which was also regarded by the city as valid, the city could not defeat a recovery of hydrant rentals by showing that the ordinance was in conflict with Code 1873, § 489, declaring that no ordinance shall contain more than one subject, which shall be expressed in its title.

9. When a city council revises an ordinance relating to the establishment of a waterworks system, and as thus revised re-enacts it, and the Legislature, at the instance of the city, passes a curative act, declaring that the revised ordinance shall be in force and effect from the date of its adoption and publication, the original ordinance, creating a contractual relation between the city and waterworks company, is ratified.

10. Under Code 1873, § 473, which provides that when waterworks are constructed by a company the city may contract with the company to supply the city with water for fire purposes, etc., a city may contract with a water company to pay for hydrant rentals a larger sum than would be produced by an annual five-mill tax on the dollar, notwithstanding section 475, which authorizes the levy of a special tax sufficient to pay water rents, but limits the rate to five mills on the dollar.

11. Where a city recognizes plaintiff as the owner of the waterworks system in the city by consenting to a transfer of the plant by plaintiff to a company, the city could not defeat plaintiff's right to recover hydrant rentals provided for in the original contract for the construction of the works by showing that the contract was made with a third person, and that the contract was not assignable without the city's consent.

12. A city, during a period of many years, made payments to a water company for hydrant rentals without making any directions as to the application of the payments. The company credited them on the account in the order in which the rent accrued, and when this was done all the rent was paid down to that which accrued within five years of the commencement of an action by the company to recover the rent due. *Held*, that no portion of the rent claimed to be due was barred by limitations.

Appeal from District Court, Linn County; W. N. Treichler, Judge.

The defendant is a city in this state of the second class. The plaintiff is a corporation organized under the laws of this state, and engaged in maintaining and operating a system of waterworks in said city, supplying the city with water for public purposes, and private consumers for domestic and other purposes. This action is brought against the defendant city to recover an amount alleged to be due as a balance for public water service rendered. The facts involved are not seriously in dispute. These may be regarded as fully established: In the year 1885 a movement was started in Marion, then as now a city of the second class, the purpose being to secure a system of waterworks. In April of that year one J. W. Starr, accompanied by a citizens' committee, went before the city council while in session, and submitted a written proposition, in accordance with which, if accepted and a contract entered into, he would undertake to erect and put in a system of waterworks. We notice here only such provisions of the writing as we

Digitized by Google

deem material to the questions presented for our determination. The character and capacity of the proposed plant are described. Included therein is a provision for 5½ miles of distributing mains, which are to be laid in such streets, etc., as the city council may designate. To these mains are to be connected 50 hydrants, to be placed at such points as the city council may designate. Provision is made for the extension of mains upon petition therefor by property owners, or for fire purposes only; in the latter case it being conditioned that the city council shall locate six hydrants to the mile of such extensions. After providing in detail for the service to be rendered, it is said that payment therefor shall be made by the city as follows: For the 50 hydrants first put in, the sum of $3,000 per annum; for additional hydrants set, $30 each per annum—payments to be made to the Fidelity Insurance, Safe Deposit & Trust Company of Philadelphia. It is then provided that "a special tax shall annually be levied to pay said public rentals, and said tax when collected shall be held inviolate for the payment of said public rentals of hydrants, and paid to the parties as above provided. Said special tax shall be collected and paid over, as above set forth, on the first days of June and December of each and every year. * * * That the annual rental shall commence from the date water service begins." After some other clauses, it is then provided that the city, as far as authorized by law, shall grant the exclusive right to streets, and pass all needful ordinances to enable the party building or owning the works to maintain and operate the same for the period of 25 years. Provision is then made for purchase of the plant by the city, at its option, upon the expiration of the period named.

The citizens' committee recommended that the council enter into the proposed contract. A member of the council moved "that the council at once close the contract with Mr. Starr. Carried unanimously." It appears that a committee was then appointed by the mayor to meet with Starr the next morning. No report of such committee was made, but at a council meeting held on the following day the mayor reported that the contract for waterworks had been duly executed with Starr. On the face of the contract it is signed by Starr, and by "E. L. Sampson, Mayor of the City of Marion. Attest: J. B. McKean, City Clerk." The corporate seal of the city is also attached. It is conceded that the matter of a franchise to, or contract with, any corporation or individual for the erection and maintenance of a system of waterworks was never submitted to a vote of the electors of the city. It is also conceded that at all times in question the city council was composed of the mayor and eight aldermen. It appears that in May following a corporation was organized under the general law of this state, taking the name of the City of Marion Waterworks Company. The purpose of such corporation, as stated in its articles, was to construct and maintain a system of waterworks in the city of Marion, to supply water for public and private uses. To this corporation Starr transferred and assigned all his rights and interest in the premises, and this transfer was approved by the city council by a resolution adopted May 20, 1885. In June thereafter, at a meeting of the city council, an ordinance was introduced, the material portions thereof being as follows: Section 1 grants to the city of Marion Waterworks Company the right to lay water pipes in the city streets, etc., to supply the city and its inhabitants with water, and all in accordance with the contract entered into between the city and J. W. Starr, reference to which and the record thereof is made. Section 2 grants powers of eminent domain to the extent the city is authorized so to do. Section 6 provides for payment to the company by the city for hydrant rentals identical in the amount and at the times specified in the Starr proposition. Section 7 is as follows: "For the purpose of providing the necessary funds to pay the annual rentals herein provided for, the city council shall at the regular time of levying taxes in each year to be made, levy, and cause to be collected, a special tax, as provided for under section 475 of the Code of Iowa, 1873; and if the amount collected in this manner and with limitation provided for in section 475 of the Code of Iowa, shall be insufficient to pay the annual rental for any one year, then any deficiency remaining unprovided for, after exhausting said special tax, shall be paid by the said city of Marion from the general funds of said city at the time said rental shall be due, and the said special tax when collected, shall be held inviolate and used for said annual rental only; and no part of the same shall at any time be used for any other purpose whatever. The limits within which the special levy, herein provided for, shall be made on the taxable property of the city, shall be fixed by the city council each year before levy is made." The following in reference to said ordinance appears in the minutes of said meeting: "Council met in regular session, his honor the mayor and all the councilmen present except Braska. The waterworks ordinance, as reported by the city attorney, was then read. Councilman Wood then moved to proceed to pass the ordinance as read. Carried unanimously. Councilman Mentzer moved to waive second and third readings, and on roll call motion prevailed unanimously. Alderman Wood then moved the ordinance on its passage. On roll call carried unanimously. J. B. McKean, City Clerk."

Thereafter the waterworks company installed and put in operation a system of waterworks, and on October 31, 1887, in a meeting of the city council at which all members were present, there was introduced a report of a committee of the council on waterworks reciting, in substance, that the system had

Digitized by Google

same be accepted, and that payment of the hydrant rentals on the 50 hydrants set be made, at the rate of $60 each per annum. The minutes of the meeting shows: "Alderman Mentzer moved the adoption of the report. Seconded by Daniels. On roll call, unanimous." In the year 1895 the city council attempted a revision of the ordinances of the city. In connection therewith, it appears from the minutes of the council meetings that on January 7, 1895, Ordinance No. 24 was introduced and read. January 15, 1895, said ordinance was read a second time. On March 11, 1895, the council met to consider ordinances, and there were present the mayor and six aldermen. It was moved that "the council proceed to pass Ordinances Nos. 24, 25, 26, and 27 on their third reading and passage. On completion of the reading of the same, on adoption, the ayes were [naming the six aldermen]." Ordinance No. 24 is entitled "An ordinance to authorize, permit and enable the Marion Waterworks Company to lay its mains and necessary pipes under the streets, alleys and public places within the limits of the city of Marion, and condemn private property for the construction and operation of its works." Sections 1 to 9 thereof, inclusive, are identical with the corresponding sections of the ordinance of 1885. In addition thereto is a section making it unlawful for any unauthorized person to have tools, etc., of the water company in possession, and making it the duty of certain city officers to collect such tools, and return the same to the water company; a section making it unlawful for any person to use water in violation of the rules of the company, and giving the company the right in such cases to cut off from such person all water connection, etc.; a section providing that a violation of any of the provisions of the ordinance shall be a misdemeanor, and punished by fine or imprisonment, etc.

It appears that at the time of installing its plant the waterworks company executed a mortgage to the Fidelity Insurance, Trust & Safe Deposit Company, as trustee, covering the entire plant, including the franchise and contract with the city, and all rents, incomes, etc., to secure a bonded indebtedness in the sum of $70,000. The company failing to make payments of principal and interest as stipulated, foreclosure proceedings on said mortgage were commenced, under which a receiver was appointed, who took charge of the plant. There was a decree of foreclosure, and thereafter the entire property, including the balance due and unpaid and to become due for hydrant rentals, was sold under execution to said Fidelity Company. A sheriff's deed issued September 4, 1895. Persons interested in the waterworks company thereupon organized and procured to be incorporated the plaintiff company. September 21, 1895, the Fidelity Company sold and conveyed plaintiff has since continued to operate the same. Each year since said system was put in operation the city has levied a five-mill tax to create a fund for water purposes. From time to time city warrants have been drawn by order of the city council in payment of hydrant rentals, and the same turned over to the waterworks company, to the receiver, and to the plaintiff, as each successively operated and controlled the plant. It is further made to appear that in 1896 a corporation was organized, known as the Marion Improvement Company, having for its object the installation of a plant to furnish heat, light, power, etc., for public and private use in the city of Marion; that this company has bought up and now owns a majority of stock in the plaintiff company. The improvement company requested of the city council sanction of the transfer to it of the plant of the plaintiff company, and on March 25, 1896, a resolution was adopted by the council, by unanimous vote, consenting to and confirming such transfer. The contract with Starr is mentioned in terms in said resolution.

Attached to the petition is a statement of account for hydrant rentals beginning with an item dated December 1, 1889, and ending with an item dated December 1, 1900, and showing credits from time to time for warrants received. The balance due as shown by the account is $8,385.82, and for this sum judgment is demanded. The matters of defense set up, and such further matters of fact as are material, will be found stated in the opinion. There was a trial to the court, a jury being waived, resulting in a judgment in favor of defendant. The plaintiff appeals. Reversed.

Jamison & Smyth and Fitzgerald & Varner, for appellant. Voris & Haas, C. J. Haas, and Cook & Loomis, for appellee.

BISHOP, C. J. The fact that full and satisfactory service, as alleged, was rendered by plaintiff, and those whom it succeeds, during the entire period in controversy, is not disputed. There are presented substantially four grounds of defense. These are: (1) That the contract under which plaintiff and those whom it succeeds performed the service in question was never legally executed or authorized, and is in no manner binding upon the city; that all ordinances of the defendant city, so far as they purport to grant the water company any rights, are invalid, never having been legally adopted. (2) That, even if the original contract was valid, yet under the terms thereof the water company was entitled only to the proceeds of a five-mill levy on the taxable property of the city subject thereto, and that all such sums have been paid. (3) That the alleged contract for water supply, even if valid, was made and entered into with a person or company other

Digitized by Google

and plaintiff can assert no rights thereunder. (4) That a part of plaintiff's demand is barred by the statute of limitations. We may consider these several contentions in the order stated.

1. In connection with the first ground of defense, our attention is called to section 471, Code 1873, and it is insisted that there was an entire failure to comply therewith on the part of the defendant city. The section referred to has relation to the powers of cities and towns, and provides that "they shall have power to erect waterworks, or to authorize the erection of the same, but no such works shall be erected or authorized until a majority of the voters of the city or town at a general or special election or four-fifths of the members of the council by vote approve of the same." Giving to this statutory provision full force, still we are unable to agree with the contention of appellee. The record discloses this to be the situation: Starr, backed up by a committee of citizens, was before the council asking that he be given a franchise to put in a system of waterworks, and in a writing which he presented he set forth the exact terms and conditions upon which he was willing to accept a franchise and put in the system. All this appears in the official minutes of the meeting. Now, having the statute in mind, it is plain that, if the council chose to act at all in the premises, two courses were open to it —it might by vote approve or reject the plan proposed, the affirmative votes of three-fifths in number of the members of the council being necessary to an approval; or it might provide by resolution, a bare majority vote only being necessary thereto, for a submission of the question of authorization to a vote of the electors of the city for their approval or rejection. The purpose of the statute, as we understand it, was to forbid any steps being taken looking to the erection of a system of waterworks, whether by the city itself or by a private person or corporation, until a majority of the voters of the city, or four-fifths in number of the members of the city council, had by vote declared in favor thereof. Whatever may be the rule at the present time, no one will contend that under the provisions of the statute in question it would be necessary to submit to a vote of the electors anything more than the simple question, shall the erection of a system in accordance with the plan proposed be authorized? And the question would be the same if put to a vote of the members of the council. In the present instance the question was put to a vote of the council, all members being present, and all voted in the affirmative. Such fully appears from the official minutes of the meeting. It would be easy to say that the question as put does not correspond in form to the question as above suggested by us. But it would be effect. The council by unanimous vote put itself upon record as in favor of granting to Starr the right to establish waterworks upon the terms and conditions presented by him. This alone was essential to work a compliance with the statutory provision. We must assume that the members of the council were familiar with the statute, and we think it fair to assume that the vote taken as shown was for the purpose of making a record to stand as evidence that the law had been complied with.

We readily agree with counsel for appellee that what was done at the initial meeting of the council did not amount to the making of a contract; nor do we think the proceedings had can be construed into a warrant of authority to the mayor and recorder to proceed to the execution of a formal written contract. This conclusion arises readily from the mere reading of the record of the proceedings. It was voted simply that the council at once enter into contract relations with Starr, and no other action on the part of the council appears. The appointment of a committee to meet with Starr the following morning was not pursuant to any vote of the council, but was done by the mayor on his own motion. Moreover, had it been the purpose to authorize the execution of a contract writing by the vote taken, the yeas and nays should have been called and recorded. Section 493, Code 1873.

Giving consideration to the things done as of the time when done, it is clear that the action of the mayor and recorder in affixing their official signatures to the proposed contract was without authority, and, at the time at least, subject to repudiation. Nor did the report made by the mayor to the council on the following day, and which was received in silence, have the effect, in and of itself, to cure the irregularity, and give life to the writing as a valid contract. As we have seen, this could be done only by an appropriate motion or resolution, the vote on which was taken by yeas and nays and recorded. It is evident, however, that the council in point of fact accepted such action on the part of the mayor and recorder as sufficient to invest the writing with the necessary legal attributes of a contract. What would have been the rights of the respective parties, had Starr proceeded to put in the system and operate the same solely under the provisions of the supposed contract, for reasons which will hereinafter appear, we are not called upon to determine. Within a few days Starr assigned all his right to the waterworks company, and this was approved by unanimous vote of council. Thereupon the ordinance of 1885 was introduced in the council and adopted. It may be noted in this connection that it is said in the first section of the ordinance that the rights and privileges granted and the requirements made

Digitized by Google

without question the provisions of the ordinance are in substantial conformity to the provisions of the Starr proposal.

Said ordinance is now made the subject of attack by appellee, and it is said by counsel that it has not now nor did it ever have any force or validity as an ordinance, and therefore conferred no rights upon appellant or those whom it succeeds. In the first place it is said that there was not present at the meeting of the council the requisite number of members to adopt the ordinance. This contention may be disposed of in brief. As we have seen, the council was composed of nine members—the mayor and eight aldermen. As shown by the official minutes, there were present at the meeting in question the mayor and seven aldermen, Alderman Braska alone being absent. The vote on the passage of the ordinance was unanimous. Section 489, Code 1873, provided that "all ordinances * * * shall require for their passage or adoption the concurrence of a majority of all the trustees of any municipal corporation," etc. It follows that in the respect now in question the ordinance is not vulnerable to attack.

It should be said in this connection that it is the theory of counsel for appellee that the vote upon the ordinance must be accepted as the vote upon the question of approval required by section 471, Code 1873. With this contention, and for reasons already sufficiently set forth, we do not agree.

The second ground is based upon a failure, as asserted, to call and record the yeas and nays as required by law. The minutes of the meeting show who was present, and that the roll was called, and that the vote was unanimous in the affirmative. This was tantamount to saying that each individual member present, naming him, voted yea; nays, none. Had there been votes for and against passage, it may be conceded that the names of members voting yea and those voting nay should have been recorded. But, where all vote one way, the record imparts no further information when the names are given in connection with the vote than it does where the result of the vote is stated as in the instance before us. This, of course, upon the theory that the minutes, as here, show who was present and taking part in the meeting. We think the record discloses a substantial compliance with the statute. The conclusion thus reached by us finds direct support in Town of Bayard v. Baker, 76 Iowa, 221, 40 N. W. 818.

The remaining ground of attack is based upon the fact, as asserted, that the ordinance "contains more than one subject, and those subjects are not expressed or referred to in the title." It will be observed that the object of the ordinance as stated in the title is to enable the waterworks company to lay only grants the right to lay mains, and to condemn and appropriate private property, but in addition thereto it provides for payment to the water company as hydrant rentals the sum of $3,000 or over each year; for the annual levy of a special tax to raise such required sum; for the collection of water rents from private consumers in amounts to be agreed upon between the water company and the city; and for the purchase of the works by the city, at its option, after the expiration of 25 years, the limit of the grant. It is manifest that all these matters do not find direct expression in the title of the ordinance. Nor can we say that all the various matters referred to are included in the general subjects designated in the title. The payment of a large sum of money annually for hydrant rentals, and the levy and collection of a special tax, are subjects not involved, without direct expression, in a simple grant of authority to lay water mains in the streets of a city. It follows that an announcement in terms of the latter subject alone would not, by any fair intendment, suggest the former. Section 489, Code 1873, provides that "no ordinance shall contain more than one subject, which shall be clearly expressed in the title." It has been held that this provision is a limitation on the power of the council to enact ordinances. "By its terms it is mandatory, and ordinances passed in violation of it are inoperative because of the want of power in the council to enact them." Dempsey v. Burlington, 66 Iowa, 687, 24 N. W. 508; Lincoln Land Co. v. Grant (Neb.) 77 N. W. 349.

The Nebraska case presents conditions practically indentical with the facts in the case at bar, and the language of the statute of that state is substantially that of our own statute. The ordinance there in question, as disclosed by the title, was one to authorize the construction and maintenance of a system of waterworks, and to use streets, etc., for laying mains. It was held that a provision in said ordinance whereby the city obligated itself to pay hydrant rentals was neither clearly nor obscurely expressed in the title, and that, as the title was not an index to the contract, the contract itself was void. Counsel for appellant insists, however, that even taking the view that the ordinance appearing in the record before us was defective in the respect indicated, still such defect cannot be relied upon as a defense to this action, inasmuch as confessedly the contract has been fully performed on the part of the water company, and the city has received and accepted the full benefits thereof. That the city had power to contract for a water supply for fire protection and other public purposes, and this in connection with the grant of a franchise to a water company, cannot be questioned. Grant v. Davenport, 36 Iowa,

Digitized by Google

ton, 101 Iowa, 687, 70 N. W. 739.

We have, then, no occasion to consider the rule that finds application in cases which involve only the exercise of powers not granted to municipal corporations. Reduced to a last analysis, we think the situation presents simply this question: Can the defendant city be held liable for benefits received notwithstanding the fact that in entering into the contract the power possessed by it was defectively exercised? And it is our judgment that both reason and authority require an affirmative answer to such question. To begin with, the contract proposed by Starr was signed by him in good faith, and no other act on his part was required to make a binding contract. As far as the city was concerned, there was no purpose lying behind the defect in the execution of such contract, but such defect was occasioned solely by inattention on the part of the city council to the form of procedure prescribed by law. So, too, the waterworks company had no part in the enactment of the ordinance in question. Here, again, the defect was the result of careless inattention on the part of the city council. In this connection we may concede that, in the case of an executory contract, a municipality may be heard to deny the validity thereof, upon pointing out the fact that in connection therewith the prescribed forms of law were not observed; and this would be true without reference to any question of intention or good faith, and notwithstanding the party with whom the contract was sought to be made had no actual knowledge of the existence of the defect. Manifestly, however, the principle involved in such cases has no application to a case where the contract has been fully executed according to its terms by such other party. In the case before us the works were put in and operated for a period of nearly 20 years, in full faith that the contract had been legally executed and was binding upon both parties. The city had directed where hydrants should be placed, and had accepted of the use thereof as occasion demanded. In 1895, when revising its ordinances, it undertook, at least, to re-enact the ordinance of 1885, with some additional provisions for the further benefit and protection of the water company and its property. From time to time it had made payments to the company on account of hydrant rentals, etc. Now, in view of all this, we agree with counsel for appellant that the city cannot avail itself of an irregularity occurring in connection with the execution or adoption of the contract agreement to defeat its liability for the water actually furnished, received, and used at the contract rate. The irregularity asserted did not involve a want of power. Had such been the case, the other contracting party might well be held to have acted in the premises at his peril. But it cannot be true, in

has been fully performed on his part, simply because the city council is now able to point out that the draftsman employed by it had unintentionally and carelessly omitted to make reference in the title of the ordinance adopted by it to certain of the provisions contained therein. Every principle upon which the law of estoppel is based may be invoked to override a defense thus sought to be interposed. The situation may fairly be likened to that of a principal who has accepted and retains all the benefits of a contract, but who seeks to avoid liability on his own part by asserting that the agent who acted for him in making such contract had failed to conform to his letter of authority in respect to form, conditions, etc. The principal might repudiate, of course; but to allow him to repudiate, and at the same time retain, would be to give sanction to an act of injustice, and put a premium upon fraud. Our conclusion finds ample support in the following among other authorities: Bank v. Arkansas City, etc. (C. C.) 67 Fed. 196; Moore v. New York, 73 N. Y. 238, 29 Am. Rep. 134; Whitney Arms Co. v. Barlow, 63 N. Y. 62, 20 Am. Rep. 504; Knox v. Aspinwall, 21 How. 539, 16 L. Ed. 208; Marsh v. Fulton Co., 10 Wall. 676, 19 L. Ed. 1040; Hitchcock v. Galveston, 96 U. S. 341, 24 L. Ed. 659; City of Camden v. Mulford, 26 N. J. Law, 49; McPherson v. Foster, 43 Iowa, 48, 22 Am. Rep. 215; City of Keokuk v. Ft. Wayne Elec. Co., 90 Iowa, 67, 57 N. W. 689; Dillon on Mun. Corp. § 457. We know of no cases, the authority of which we are willing to recognize, holding to the contrary.

There is another reason why this defense should not prevail. In 1895 the city council revised the ordinances of the city. The ordinance of 1885 was included therein and readopted. True, here again omissions occurred and irregularities crept in, but all such had relation to the form and method of proceeding only, and, as we think, were cured by the special act of the Legislature thereafter passed for that purpose, and which act was so passed at the instance of the city and by its procurement. Chapter 193, p. 194, Acts 26th Gen. Assem. The revision and re-enactment of the ordinance, and the subsequent legalization thereof, not only recognized the existence of a contract relation, but, as we think, amounted to a complete ratification of all that had theretofore transpired in connection with the creation of such relation and what had been done in pursuance thereof.

2. We now inquire whether the water company is limited in its right of recovery to the proceeds of a five-mill levy and whether all such amounts have been fully paid. It will be observed that in the Starr proposal the amount of compensation to be paid was a fixed sum per hydrant. A special tax is referred to, but the rate thereof is not specified

Digitized by Google

cient sum is not realized therefrom the deficiency shall be paid from general funds. Such is the contract, and the right of recovery is thereby fixed unless there be some positive rule of law which dictates otherwise. Section 473, Code 1873, provides that when waterworks are constructed by an individual or company the city is authorized to enter into a contract with such individual or company to supply said city or town with water for fire purposes, etc., and to pay therefor such sum or sums as may be agreed upon between the contracting parties. Section 475 of the same Code authorizes the levy and collection of a special tax sufficient to pay water rents, but limits the rate to five mills on the dollar of taxable property. In Creston Waterworks Co. v. Creston, 101 Iowa, 687, 70 N. W. 739, we held that a municipal corporation is not limited to the five-mill special tax in the payment of hydrant rentals, but may pay the deficiency, if any, out of the general fund. Viewing the contract as made between these parties in the light of the statutes then in force and our holding in the Creston Case, we may dismiss the second ground of defense made without further comment.

3. We may dispose of the third ground of defense in a word. Summarized, the facts show that the original proposition was made by Starr. He assigned to the waterworks company with the express consent of the city. The waterworks company went into the hands of a receiver, who operated the works, and from whom the city received service and to whom it paid hydrant rentals. The present company is a reorganization of the waterworks company, and from it the city has received service, and in part at least paid therefor. Moreover, it has given the present company direct official recognition by consenting, by resolution of its council, to a transfer of the plant to the Marion Improvement Company. What might have been the rights of the city if objection had been made at the time of transfer we need not stop to inquire. Taking the situation as we have it before us, it requires no argument to reach the conclusion that the defense now asserted, and under which the defendant city seeks to escape payment of the balance due, if any such there be, is without merit.

4. The remaining question to be considered has relation to the statute of limitations. Turning to the account attached to plaintiff's petition, and we find that beginning June 1, 1889, there are charged rentals on 50 hydrants at $60 each per annum, and on 8 at $30 each per annum. This continued down to June 1, 1892, when the charge was for 12 hydrants, at $30 each per annum, to December 1, 1892. From this date to the close of the account, December 1, 1900, the charge was for 50 hydrants at $60 each per annum, and for 18 hydrants at $30 each per [illegible]m. The sum warrants are credited on the account. No definite time seems to have been observed in making payments, and the warrants vary in the several amounts thereof from $100 to $1,592.49. The sum total of the payments credited is $31,334.18, leaving a balance of $8,385.82. The plaintiff offered evidence in support of the account as stated, and this was not contradicted by any evidence on the part of defendant. Now, it is a well-established rule that where no special application is directed to be made, payments are to be credited in extinguishment of the debit items in the order in which such items accrued. This was the course pursued by the water company, there having been no request or directions to the contrary. It is apparent that this resulted in payment of all rentals down to within five years of the time this action was commenced. The limitation fixed by the statute being five years, we hold that no portion of the amount for which judgment is herein demanded was subject to the bar thereof.

Upon the whole case we conclude that the trial court was in error in dismissing plaintiff's action and rendering judgment against it for costs. The judgment is accordingly reversed, and the cause is remanded for further proceedings according to law. Reversed.

STATE v. CROFFORD.

(Supreme Court of Iowa. Oct. 19, 1903.)

MURDER—JURORS—FORMED OPINION—CONSPIRACY—EVIDENCE—EVIDENCE OF OTHER CRIMES—WEIGHT OF EVIDENCE—INSTRUCTIONS.

1. Challenge to a juror should be sustained, he having lived in the same township as the girl alleged to have been murdered, heard the circumstances discussed, and discussed them, not only read substantially all the testimony against defendant, but believed it to be true, and made up his mind, and said he was not unprejudiced, but believed the truth of what he had heard, though on a somewhat persistent cross-examination he expressed belief in his ability to render an impartial verdict.

2. A physician is not connected with an abortion by evidence merely that it was committed in the town in which he lived, and that about that time the woman was seen on the street in front of his sanitarium.

3. A conspiracy must be shown by testimony outside the declarations which are sought to be introduced against one as made by a co-conspirator.

4. Only those statements of a conspirator made pending the conspiracy, and in furtherance of its unlawful purpose, are admissible against his co-conspirator.

5. On a trial for murder by commission of an abortion, proof of an earlier abortion committed on the woman by an unknown person is no proof of defendant's guilt of the crime charged, without other evidence to show his guilty connection with the earlier offense.

6. While the question of prima facie showing of conspiracy to allow admission of declarations of a co-conspirator is for the court, final de-

---

¶ 3. See Criminal Law, vol. 14, Cent. Dig. §§ 1012, 1017.

Digitized by Google

termination thereof is for the jury, and they should find the conspiracy before considering the declarations.

7. On a trial for murder by commission of an abortion, evidence that defendant's co-conspirator therein, prior to the conspiracy, asked another physician to commit a prior abortion on the woman, is not admissible.

8. On a trial for murder by commission of an abortion it may not be shown that defendant had produced abortions on other women.

9. The court being restricted to a mere statement of the law without suggesting any opinion on the facts, it is error, in a case where the state's evidence is circumstantial, and defendant's consists almost entirely of direct evidence in denial and explanation, to give a charge from which one would naturally conclude that the inferences to be drawn from incriminating circumstances are infallible, or of decidedly greater weight and certainty than direct testimony.

10. The statement in a charge that the jury should remember that a failure to perform their duty by which a crime might go unpunished cannot be corrected by a new trial is erroneous.

Appeal from District Court, Decatur County; H. M. Towner, Judge.

Indictment for murder in the second degree. The defendant was convicted, and appeals. Reversed.

V. R. McGinnis, C. W. Hoffman, and M. L. Temple, for appellant. C. W. Mullan, Atty. Gen., C. A. Van Vleck, Asst. Atty. Gen., and A. P. Olsen, for the State.

WEAVER, J. The appellant is a physician, and for several years prior to the date of the crime with which he is charged conducted a sanitarium or hospital at Lamoni, in Decatur county. Maud Stone, a young unmarried woman, about 21 years of age, residing with her parents upon a farm in said county, entered the appellant's sanitarium about January 22, 1901, and died there one week later. A post-mortem examination revealed, as it is claimed, evidences that she had been lately pregnant, and had suffered an abortion. It is the theory of the state that the pregnancy was the result of an intimacy between the young woman and one Ira Hammond (who is jointly indicted with the appellant), and that at the instigation or employment of Hammond, appellant, by the use of violent and unnatural means, produced a miscarriage or premature delivery of the fœtus, in which operation the young woman received injuries causing her death. Defendant pleads not guilty to the charge. On the trial he admits that Miss Stone came to his sanitarium, and there died, but avers that, if she suffered an abortion, the same had occurred before she came under his care, and that he had no knowledge thereof, or part therein. With this brief outline of the case, we proceed to a consideration of the principal points relied upon in the arguments of counsel.

1. In selecting the trial jury, one Fisher, a member of the regular panel, was called, and examined as to his competency and qualification to serve. In response to inquiries by counsel and by the court he said, among other things: "I have formed and expressed an opinion in regard to the merits of the case. * * * Have heard the case discussed frequently. Have read the testimony before the coroner's jury. Heard some of the witnesses discussing the case. I live at Decatur City. She [Miss Stone] lived in the same township. Have heard the case discussed over there, and have formed from that an opinion. Undoubtedly it would take evidence to remove that opinion. I have my mind made up at this time as to his guilt or innocence, and it would take evidence to remove it. I am not unprejudiced. I believe what I have heard. * * * I read the newspaper accounts of all the testimony that was published of all the witnesses before the coroner's jury. I believed what they swore to was true, and have that same belief now." To further questioning the juror said: "If the evidence was sufficient, I do not think my opinion would prevent my rendering a true verdict. * * * I think I would render a fair and impartial verdict. I think, notwithstanding the newspaper accounts, I could render a fair verdict upon the evidence submitted. * * * Do not think I would be influenced by what I have read." The appellant's challenge to this juror was overruled, and upon this ruling error is assigned. In these days, when the story of every alleged crime of a serious nature is promptly heralded by the newspapers, and comes quickly to the knowledge of the great body of intelligent citizens of the county, it is scarcely possible, even if it were thought desirable, to obtain a jury of average men having no impressions or opinions as to the merits of the case. In view of this fact we have in numerous cases refused to sustain an appeal based upon the overruling of challenges, where, notwithstanding such impressions or opinions, it fairly appears that the juror is fair-minded and unprejudiced, and is able and willing to render an impartial verdict. State v. Bruce, 48 Iowa, 530, 30 Am. Rep. 403; State v. Sopher, 70 Iowa, 496, 30 N. W. 917; State v. Vatter, 71 Iowa, 558, 32 N. W. 506; State v. Munchrath, 78 Iowa, 271, 43 N. W. 211; State v. Field, 89 Iowa, 35, 56 N. W. 276; State v. Brady, 100 Iowa, 194, 69 N. W. 290, 36 L. R. A. 693, 62 Am. St. Rep. 560; State v. Bone, 114 Iowa, 542, 87 N. W. 507. In the opinion of some of the members of this court, some of the cases above cited have gone to the extreme verge of liberality in this respect, and the rule thus established ought not to be further extended. The question to be determined by the trial court upon such a challenge is whether the juror has formed or expressed such an opinion as will "prevent him from rendering a true verdict upon the evidence submitted on the trial" (Code, § 5360): and as the juror's conduct, demeanor, and bearing in court may properly be accorded material weight in considering the facts dis-

Digitized by Google

closed by his answers, we are reluctant to interfere with the exercise of the court's discretion. It must not be overlooked, however, that the right to have an impartial jury, who will hear the case calmly and dispassionately, and render a verdict upon the evidence, and the evidence alone, uninfluenced by public clamor or preconceived opinions, is absolutely essential to the proper administration of justice. To put a man upon trial before jurors who already believe him guilty—no matter how upright such jurors may be, nor how sincere their purpose not to allow their prejudices any influence upon their verdict—is to expose the accused to a hazard wholly inconsistent with the just and humane theory upon which our criminal procedure is founded. It is readily conceivable that an opinion of a defendant's guilt may be so qualified in the juror's mind as not to be a sufficient ground of challenge. For instance, a juror who says that, if the statements he has heard or read be true, then, in his judgment, the accused is guilty, is not necessarily subject to challenge. State v. George, 62 Iowa, 682, 18 N. W. 298; State v. Ostrander, 18 Iowa, 451; Trimble v. State, 2 G. Greene, 404; State v. Sater, 8 Iowa, 420. In such case the opinion of guilt is based upon the hypothesis that certain facts exist, but the truth of the hypothesis itself is a matter upon which the juror's mind is still open and undetermined. Where, however, the juror discovers that he has become convinced of the truth of the alleged evidence, and therefrom has reached a satisfactory conclusion of the guilt of the accused, a very different situation is presented. He may be a man of fair intelligence and pure purpose, sincerely intending to give the accused a fair trial; but what certainty is there that he can do it? It may be too much to say that no man can so far divorce himself from his settled belief in a defendant's guilt as to weigh and consider conflicting testimony and draw conclusions therefrom with the same unbiased mind and judgment which he would employ in a case concerning which he has never formed an opinion; but such happily constituted persons are, to say the least, very rare. The man and the juror are one, and the theory of the dual existence in one personality of a biased man and an impartial juror has not been so fully demonstrated that we may safely act upon it in the administration of justice. A person accused of crime should bear no greater burden than is created by the evidence produced against him on the trial, and the juror who passes upon that evidence should come to its consideration unhampered, and unembarrassed by any ready-formed convictions as to the vital fact or facts in controversy. In so far as the accused must address himself to the removal of unfavorable opinions imported into the jury box from any other source than the sworn testimony, to that extent he is denied the fair trial which the law guaranties him. A crime of the character charged in this case becomes at once a matter of general and earnest discussion in the neighborhood in which it is committed. Theories of the guilt or innocence of suspected persons, supported by facts, circumstances, rumors, and conjectures, are common topics of conversation, and it is scarcely conceivable that one who has lived in such atmosphere can avoid a mental condition which precludes his being a fair juror. This, we think, was the case with the juror Fisher. He lived in the same township with the girl alleged to have been murdered. He had heard the circumstances discussed. He had discussed them himself; had not only read substantially all the testimony against the defendant, but believed it to be true; had made up his mind. He candidly said he was not unprejudiced, and believed the truth of what he had heard. It is true that upon a somewhat persistent cross-examination the juror expressed belief in his ability to render an impartial verdict, but, however honest and sincere this estimate of his mental condition, we think the circumstances as stated by him make its correctness so doubtful that the challenge to his competency should have been sustained.

2. As already stated, the alleged criminal abortion resulting in Miss Stone's death occurred in January, 1901. That the young woman was pregnant from a date not earlier than the preceding October or November, and that this condition was the result of an intimacy with Hammond, and that he was active in advising and assisting her in bringing about a miscarriage, is sufficiently indicated by the testimony. The theory of the state is that, in pursuance of this unlawful purpose, Hammond entered into a conspiracy with appellant, who, being a physician, administered the treatment by which a premature delivery was produced. There is no evidence that Hammond and appellant ever met or had communication or dealings with each other prior to January 12, 1901. On that date, which was about 10 days before Miss Stone entered appellant's sanitarium, it is shown by one or two witnesses that Hammond visited the place, and had a private interview with appellant. Other evidence tends to show that Hammond was again at the sanitarium while Miss Stone was an inmate there. These facts, with other circumstances relating to the subsequent acts and statements of appellant, were sufficient, we think, to make a prima facie case of collusion between said parties dating from their first proven interview, and justifying the admission in evidence of the subsequent acts, writings, and statements of Hammond, done or made in pursuance of the common unlawful purpose. In support of the indictment the state introduced in evidence, over appellant's objection, a series of letters by Hammond to Miss Stone, found among her effects after

her death. They bear date beginning with July 19, 1900, and ending with January 15, 1901. These letters, with others written by Miss Stone and offered in evidence by appellant, reveal a most surprising and pitiful story of human weakness and unbridled passion, the details of which need not here be related. Suffice it to say it is made clear that for a year or more preceding the unfortunate woman's death these parties had maintained illicit relations, resulting in her pregnancy as early as July, 1900, if not one or more earlier pregnancies, and that exposure had been avoided by miscarriages brought about through the advice or procurement of Hammond. The language of the letters written in July, August, and September indicate unmistakably that somewhere about August 20, 1900, Miss Stone, acting with the advice and consent of Hammond, went to Lamoni for the purpose of procuring a miscarriage, and that, such purpose being accomplished, Hammond drove to Lamoni, and took the young woman to her home. There is, however, an entire lack of any fact or circumstance in the record showing the place where, or the person by whom, the unlawful act was committed. It is true that Lamoni was then the place of appellant's residence, and one witness testifies to having seen Miss Stone about that time upon the street in front of the sanitarium. But these circumstances alone do not arise to the dignity of evidence tending to connect appellant with the crime then committed. The lack of evidence is emphasized when we recall the principle that the alleged conspiracy must be shown by testimony outside of the declarations and statements which are sought to be admitted as having been made by a co-conspirator. The combination or confederacy is presupposed, and must be established by other evidence before the jury can rightfully give any consideration to such statements. See Wiggins v. Leonard, 9 Iowa, 194. In the absence, therefore, of any proof tending to point out the appellant as having assisted in producing the abortion of August, 1900, and of any collusion or conspiracy between him and Hammond until January 12, 1901, we are constrained to hold that the admission of letters preceding the latter date was error. It must be remembered that the appellant was alone upon trial, and that the matter admitted in evidence consisted of unsworn statements made by another person, not in his presence or hearing, and not addressed to him. The rule which allows the statements of one co-conspirator to be given in evidence against another is a marked exception to the general rule, which excludes hearsay testimony, and applies only where those statements are made pending the conspiracy, and in furtherance of its unlawful purpose. Statements made by a conspirator before the conspiracy was formed or after it has been accomplished, fall within the general rule, and are not admissible except as against the person making them. Such is the doctrine which has been repeatedly announced in this state, and, so far as we are aware, of universal prevalence in all courts administering justice according to the common law. State v. Nash, 7 Iowa, 347; Johnson v. Miller, 63 Iowa, 529, 17 N. W. 34, 50 Am. Rep. 758; State v. Weaver, 57 Iowa, 73, 11 N. W. 675; State v. Arnold, 48 Iowa, 59; Taylor County v. Standley, 79 Iowa, 67, 44 N. W. 911; State v. Grant, 86 Iowa, 21, 53 N. W. 120; Spies v. People, 3 Am. St. Rep., note. The Attorney General evidently appreciating the force of these objections to the testimony under consideration, urges that even if inadmissible on the theory of a conspiracy, it was competent as tending to show the intimacy of Miss Stone with Hammond. The pertinency of this suggestion would be very apparent were Hammond on trial, but such is not the case. Appellant was being tried for an act alleged to have been committed in January, 1901, and proof of another abortion, produced in August, 1900, by some person unknown, could have no bearing upon his guilt of the particular crime charged, without other testimony tending to show his guilty connection with the earlier offense.

3. Referring further to the subject of the last preceding paragraph, it may be said that the prima facie showing of conspiracy is first addressed to the court alone, simply as governing its action in the admission of evidence; but, whenever such a prima facie case is made, the final determination whether such conspiracy did or did not exist should be left to the jury. Taylor County v. Standley, supra; State v. McGee, 81 Iowa, 17, 46 N. W. 764. The court below gave the jury no instruction upon this subject, and no specific direction as to how or to what extent the letters of Hammond might be taken into consideration in determining the question of defendant's guilt. The finding of a conspiracy was a necessary preliminary to the consideration of the letters for any purpose, and we think an instruction to that effect should have been given. Wiggins v. Leonard, 9 Iowa, 194.

4. B. I. Elker, a physician testifying on behalf of the state, was permitted to say that shortly prior to August 7, 1900, Hammond applied to him to examine Miss Stone, and determine whether she was pregnant, and that Hammond then asked the witness to help him out of the difficulty. On the principle hereinbefore approved, this evidence should have been excluded. This act on part of Hammond was long before the time when the testimony indicates that the conspiracy, if any, between Hammond and appellant, was formed. Indeed, the very fact that Hammond was applying to another physician is an affirmative indication that at that date he had entered into no arrangement with the appellant.

5. Certain witnesses for the state were allowed to give testimony tending to show that appellant had produced other abortions upon

charged in the indictment, and have held that, subject to certain well-defined exceptions, it should be excluded. State v. Vance, 94 N. W. 204; State v. Roscum, 93 N. W. 295. The present case does not, in our judgment, come within the recognized exceptions to the rule, and the objection to the evidence should have been sustained. Parkinson v. People, 135 Ill. 401, 25 N. E. 764, 10 L. R. A. 91; Baker v. People, 105 Ill. 452; 3 Russell, Crimes (5th Ed.) 368; Wharton's Crim. Ev. (5th Ed.) §§ 29, 30; State v. Lapage, 57 N. H. 245, 24 Am. Rep. 69; Shaffner v. Commonwealth, 72 Pa. 65, 13 Am. Rep. 649; Commonwealth v. Grief (Ky.) 27 S. W. 814; State v. Rainsbarger, 71 Iowa, 746, 31 N. W. 865; Boyd v. U. S., 142 U. S. 450, 12 Sup. Ct. 292, 35 L. Ed. 1077; People v. Jones, 31 Cal. 565; Spurlock v. Commonwealth (Ky.) 20 S. W. 1095; People v. Schweitzer, 23 Mich. 301; Morris v. State, 16 Miss. 762.

6. Paragraph 14 of the court's instruction was devoted to the definition and discussion of circumstantial evidence. It is too long to be set out in full, but the following extract therefrom will make clear the points of objection made by appellant. "Circumstantial evidence is legal evidence, and is not to be discredited merely as such. Its value, and, indeed, its necessity, in the ascertainment of truth is unquestioned. Nothing in the nature of circumstantial evidence renders it less valuable than other evidence. Indeed, it has been said that in many cases a verdict on circumstantial evidence alone is more satisfactory as being a true and just verdict than one founded on direct evidence; for witnesses may falsify, but circumstances cannot. Men may commit a perjury, but a fact cannot. Persons accused have been sometimes erroneously convicted upon circumstantial evidence. But so have they been upon direct testimony. That such in either case has been true is a reason for caution, but not to discredit or disregard. The possibility of error alike exists whether the evidence be direct or circumstantial." The language here employed is not without support in the authorities. Indeed, we assume that the learned discussion of circumstantial evidence by Chief Justice Shaw in the celebrated case of Commonwealth v. Webster, 5 Cush. 295, 52 Am. Dec. 711, served to a great extent as the model upon which the instruction was formed. It may further be said that this court has approved instructions embodying some one or more of the several propositions which are arrayed in the foregoing quotation, but we think none of our own precedents go to the full extent of the charge here given. State v. Moelchen, 53 Iowa, 315, 5 N. W. 186; Wheelan v. R. R., 85 Iowa, 176, 52 N. W. 119; State v. Seymour, 94 Iowa, 708, 63 N. W. 661. The question before us is not so much whether this state upon the law of evidence, as it is whether, under the practice of this state, such a discussion has any legitimate place in instructions to a jury. In considering this proposition care must be exercised to avoid being misled by cases adjudicated in other states where different practice prevails. Until within a comparatively recent period it was the general rule that the trial court could rightfully discuss the evidence in its charge to the jury, and express an opinion as to the credibility and weight of the testimony offered. That rule still prevails in some jurisdictions. In others the rule which we have adopted restricting the court to a mere statement of the law, without suggesting any opinion upon the facts, is followed; while in still others the ancient practice in this respect has been modified, but not wholly changed. For this reason many of the cases relied upon in the argument for the state cannot be accepted as in all respects applicable here. Suppose, for instance, the case before us to be precisely parallel in all its facts with Commonwealth v. Webster, and that the trial court had adopted verbatim the entire charge delivered by Chief Justice Shaw. In such case, we think, no lawyer familiar with our statute and practice would for a moment contend that the verdict could be sustained, even though, under the law and practice in Massachusetts, it would be invulnerable. That charge abounds in discussion of the evidence, and directs the jury as to the comparative weight and value of particular facts and circumstances in a manner which, however just in itself, would, of necessity, be held by us an invasion of the province of the jury. And this we think the fatal error of the instruction we are now considering. The case made by the state was almost entirely circumstantial, while the defendant's case consisted almost entirely of direct evidence in denial and explanation. Now, if the court had said to the jury, "The defendant's witnesses may have committed perjury, but the facts and circumstances proven by the state cannot lie," this expression of opinion would be so clearly erroneous as to leave no room for argument in its support. We have no thought that the court intended to convey this idea, but it remains true that such is not an entirely unnatural paraphrase of its language, and such, we think, would be its weight and effect upon the mind of the average juror. It is a holding up of one kind or class of evidence in contrast with another; one being given the merit of absolute verity, and the other discredited by the possibility, if not, indeed, the suspicion, of falsehood. In other words, we think the jury could hardly fail to understand from this charge that, as a matter of law, or in the opinion of the court, the circumstantial evidence to which they had

Digitized by Google

listened was of greater weight and of more convincing force than the direct evidence. In states having a statute like our own it has frequently been held that the charge of the court should be entirely free from any suggestion as to the weight of evidence. People v. Cowgill, 93 Cal. 596, 29 Pac. 228; Andrews v. People, 60 Ill. 354; Berry v. State, 10 Ga. 511; Walker v. State, 42 Tex. 360; Johnson v. State, 1 Tex. App. 609; White v. Territory (Wash.) 19 Pac. 37; Cunningham v. State, 65 Ind. 377. Reference to any particular fact or kind of evidence as being "strong" or entitled to "great weight" has often been held error. Steele v. State, 83 Ala. 20, 3 South. 547; People v. Ah Sing, 59 Cal. 400; Boyer v. State, 93 Tenn. 216, 23 S. W. 971. A charge to the jury that "law writers say that a chain of circumstances cannot lie, while a witness may," has been held error upon the ground we have above suggested, as being calculated to impress on the minds of the jury the suspicion that defendant's witnesses have sworn falsely. Cicero v. State, 54 Ga. 156. See, also, Harrison v. State, 8 Tex. App. 183; Id., 9 Tex. App. 407. Irrespective of the question whether this charge invades the province of the jury, we cannot indorse the proposition that, while "witnesses may falsify, circumstances cannot," and, "while men may commit perjury, a fact cannot." To speak of independent facts and circumstances as "testifying" is perhaps an allowable figure of speech, but the testimony consists wholly of the inferences or deductions which the jurors draw from them, and these may be correct or incorrect, "true" or "false." Furthermore, we must rely upon the testimony of witnesses as to the very existence of such facts and circumstances, and thus to the possibility of wrong inference we add the possibility of perjury or mistake in the premises from which the inference is drawn. We do not disparage circumstantial evidence. It is legal evidence, the value and necessity of which are beyond question; but the point we wish to emphasize is that the matter of its weight and its influence upon the verdict in any given case is for the jury alone, and the court should not, by its instructions, appear to draw a comparison or contrast between the two classes of evidence to the discredit of either. Indeed, the value of evidence, its conclusiveness or inconclusiveness, depends not upon its being either direct or circumstantial, but upon the manner in which it appeals to the candid judgment of the impartial juror honestly and intelligently seeking the truth. If, upon such an investigation of the entire case as made upon the trial, he is convinced of the guilt of the accused to a moral certainty, "beyond a reasonable doubt," then his verdict should be returned accordingly, without reference to whether that conviction has been produced in his mind by direct or circumstantial evidence. State v. Seymour, supra; State v. Rome, 64 Conn. 329, 30 Atl. 57; Mickle v. State, 27 Ala. 20; Moughon v. State, 57 Ga 102. Neither kind of evidence is infallible. Each has its inherent elements of strength and of weakness. Their relative weight and value are not matters of law to be settled by the court. These will naturally vary in different cases, and must be left to the determination of the jury. The only precedent in our own decisions which may be thought to sustain the declaration of the trial court now under consideration is in State v. Moelcher, supra, where the statement that "strong circumstantial evidence in cases of crime is often the most satisfactory," and that witnesses testifying to a "direct fact may be guilty of perjury," and that, "to use a trite expression, circumstances will not lie," was without discussion, held not to be objectionable. In the sense, if so intended, that "circumstances" cannot consciously utter a falsehood, this is, of course, true, and such we must conclude is the meaning there placed upon the instruction; but we are strongly impressed that such is not the significance which the average juror would find in the language of the trial court, but would rather conclude therefrom that the inferences to be drawn from incriminating circumstances are infallible, or at least of decidedly greater weight and certainty than the direct testimony of witnesses.

7. In the nineteenth paragraph of the charge the court admonished the jury of the important and responsible character of its duties, and among other things said: "On the one hand, you should remember that a failure to perform your duty, by which a crime, if one is shown, might go unpunished, and a criminal escape the penalty of his crime, cannot be corrected by a new trial, for the defendant cannot twice be put in jeopardy under our law. The state demands and has a right to ask at your hands the full performance of your duty in the enforcement of the law, and no notions of mere sympathy or sentimentality should cause you to hesitate in the performance of your full duty. And, on the other hand, you should never for a moment forget your duty to secure and protect every right guaranteed by the Constitution and our law to the defendant. You should not allow any outside influence or pressure, or indignation at the crime, or sympathy for the victim or her relatives, to influence you in finding a verdict in this case." An instruction in substantially the same language was before us in State v. Hunter (Iowa) 92 N. W. 872, and by a majority of the court held to be erroneous. That case was so recently decided we think it unnecessary to re-enter upon a discussion of the question thus presented. The majority remain satisfied with the conclusion reached in that opinion, and think the giving of this instruction was prejudicial error.

Other questions discussed are not likely to

Digitized by Google

ow is reversed, and the case remanded to the district court for a new trial. Reversed.

HAWKEYE INS. CO. v. HUSTON et al.

(Supreme Court of Iowa. Oct. 19, 1903.)

TEMPORARY INJUNCTION—DISSOLUTION—APPEAL—ASSIGNMENTS OF ERROR—RECORD—PRESUMPTIONS.

1. An order on a motion dissolving a temporary injunction is not a final adjudication of the merits, and can only be considered on appeal on a proper assignment of errors.

2. Where a temporary injunction was issued to restrain the collection of a default judgment on a complaint alleging that it was invalid, but such allegation was squarely denied in the answer, it will be presumed, on appeal from a judgment dissolving such injunction, based on the pleadings alone, that the injunction was properly dissolved.

Appeal from District Court, Jones County; W. G. Thompson, Judge.

In September, 1894, the defendant D. P. Huston recovered a judgment by default against the plaintiff on a policy of fire insurance issued to him. The application for such policy was taken by one W. H. Gordon, whose office was in Olin, in Jones county. Before suit was brought on the policy, Gordon died, and notice of suit was served on one F. M. Rhodes, whom the plaintiff alleges was its soliciting agent, residing at Anamosa, Iowa, but whom the defendants in their answer allege conducted the business pertaining to the agency of Gordon after his death. This action was brought in equity in April, 1902, asking a temporary writ of injunction restraining the collection of the judgment rendered against the plaintiff in 1894, on the ground that the court had no jurisdiction to render the same. The petition was presented to Judge Thompson, and an ex parte writ issued. Following the issue of this writ, the defendants answered, denying the want of service and the consequent want of jurisdiction to render the judgment sought to be enforced. Still later the defendants moved a dissolution of the temporary writ, which motion was heard and sustained, and the plaintiff appeals. Affirmed.

J. B. Johnson, for appellant. Remley & Ney and F. O. Ellison, for appellees.

SHERWIN, J. This is an equity case, and the record has not been preserved and certified, so that it is triable de novo in this court, and we have no evidence before us. The order on motion dissolving the temporary writ of injunction was not a final adjudication of the merits of the controversy, and can only be considered by us, if at all, on proper assignment of errors. It is doubtful whether view that the motion to affirm for want thereof, submitted with the case, should be sustained. We do not pass upon the motion, however, for the reason that we are of the opinion that the record presented to us fully justified the dissolution of the temporary writ. Every presumption must be indulged in favor of the validity of the judgment and of the jurisdiction of the court entering the judgment. To entitle the plaintiff to an order restraining the collection thereof, it was necessary for it to show affirmatively that it was invalid. This it alleged, but the allegation was squarely met in the answer, and upon the pleadings alone, after answer, the writ should have been dissolved.

As we have nothing but the pleadings before us, it is evident therefrom that the order appealed from is right, and it is affirmed.

¶ 1. See Appeal and Error, vol. 2, Cent. Dig. § 295.

BEICKLER v. GUENTHER.

(Supreme Court of Iowa. Oct. 20, 1903.)

VENDOR AND PURCHASER — INFANTS — CONTRACTS — DISAFFIRMANCE — ENGAGING IN BUSINESS — EVIDENCE — RESTORATION OF PROPERTY RECEIVED—DAMAGES.

1. Code, § 3190, provides that no contract of a minor can be disaffirmed where, by reason of the minor's having engaged in business as an adult, the other party had good reason to believe him capable of contracting. *Held*, that the term "engaging in business" should be construed as signifying an employment or occupation which occupied the minor's time for the purpose of a livelihood or profit, and hence evidence that a minor was employed as a farm laborer at a stipulated price per year, and while so engaged he purchased certain lots, was insufficient to show that he was "engaged in business," so as to preclude him from rescinding such purchase.

2. Where a minor purchased certain lots, and thereafter, and during his minority, it was agreed that the minor should receive from the seller a team for his interest in the lots under the contract, an election by the minor to rescind such subsequent agreement, and his offer in writing to return the team, in the absence of an acceptance was equivalent to an actual tender of the property.

3. Where a minor received a team in settlement of a contract for the purchase of real estate, and thereafter during minority rescinded the settlement and offered to return the team, which was refused, whereupon he disposed of the team to another, he was not bound to restore the team as a condition to his right to disaffirm, since he was only required by Code, § 3189, to restore "property received remaining in his control after attaining majority."

4. Where a minor elected to disaffirm a contract for the purchase of certain lots, he was entitled to recover the market value of the lots at the time of the disaffirmance, less the amount owing on the contract of purchase, with interest at 6 per cent. from the time of payments to the time of the trial.

5. Where a minor had purchased certain lots, and thereafter, on refusing to complete the purchase, it was agreed that for a team of horses

¶ 3. See Infants, vol. 27, Cent. Dig. § 157.

Digitized by Google

delivered to him by the vendor he would surrender the contract, which he did, and which was thereupon destroyed, the exchange of his interest in the lots for the team was not a disaffirmance of the contract, but a mere exchange thereof for the horses, and hence the minor was not limited, on subsequently disaffirming, to a recovery of the amount paid on the land contract.

Appeal from District Court, Black Hawk County; A. S. Blair, Judge.

The plaintiff, who was born in December, 1880, purchased four lots of defendant May 1, 1899, for which he agreed to pay $650—$42 in cash and $7 per month thereafter—deferred payments to bear interest at the rate of 6 per cent. per annum. Six payments were made, and he then notified defendant that he would pay no more. The defendant offered to return the $84 paid, with interest, which plaintiff refused. They then agreed about March, 1900, that for a team of horses, which was delivered to plaintiff, he would surrender the contract, which he did, and it was destroyed. On May 3, 1901, the plaintiff served written notice upon defendant that he elected to rescind the agreement by which he surrendered the contract of purchase, and tendered the return of the team. As defendant failed to signify his acceptance, and had transferred the lots to a third party, this action to recover their value was begun. Trial to jury resulted in a verdict for plaintiff, upon which judgment was entered. The defendant appeals. Affirmed.

Miller & Williams, for appellant. Edwards & Longley and Hoxie & Brunn, for appellee.

LADD, J. The plaintiff was but 19 years old when he bought of defendant and became owner of the lots. Within a year, and when still a minor, he exchanged them for a team of horses. This trade he elected to rescind May 3, 1901, seven months prior to his majority, and tendered the horses back to the defendant. The law deals tenderly with a minor in permitting him to disaffirm his contracts, save for necessaries, "within a reasonable time after he attains his majority, and restores to the other party all money or property received by him by virtue of the contract and remaining within his control at any time after attaining his majority," except when the other party has been misled by the minor's misrepresentations as to age, or from his having engaged in business as an adult. Sections 3189, 3190, Code; Green v. Wilding, 59 Iowa, 679, 13 N. W. 761, 44 Am. Rep. 696. The plaintiff's occupation was that of a farm laborer at a stipulated price per year. Such employment is not peculiar to adults, and furnished no ground for the supposition that he was engaged in business as such. Aside from this, he had purchased these lots, and made payments thereon. These transactions were undoubtedly such as are ordinarily performed by persons of maturity. As such they were admissible in evidence. But to "engage in business" is uniformly construed as signifying to follow that employment or occupation which occupies the time, attention, and labor for the purpose of a livelihood or profit. Abel v. State, 9 Ala. 631, 8 South. 760; Shryock v. Latimer, 57 Tex. 674; Hickey v. Thompson, 52 Ark. 234, 12 S. W. 475. See authorities collected in 6 Cyc. 259. The definition of "business" given by Webster is quite generally accepted: "That which engages the time, attention, or labor of any one as his principal concern or interest, whether for a longer or shorter time; constant employment; regular occupation." The kind of employment is immaterial under our statute. It may be any particular occupation in which the minor engages as an employment. The transaction of business occasionally would be in one sense "engaging in business," but the statute evidently contemplates doing so as a regular occupation or employment. See Stephenson v. Primrose, 33 Am. Dec. 281. It is hardly necessary to add that the evidence falls short of showing conclusively, as contended by appellant, that plaintiff had engaged in business as an adult.

2. The plaintiff offered in writing to return the team. This, in the absence of an acceptance, was equivalent to the actual tender of the property. But he disposed of the horses six weeks later, and it is said that because of not keeping the tender good, he should be defeated in this action. Disaffirmance is one thing and restoration of property quite another. The minor may disaffirm before he attains the age of 21 years. Childs v. Dobbins, 55 Iowa, 205, 7 N. W. 496. He is only required by the statute to restore the money or property received by virtue of the contract "remaining within his control at any time after attaining his majority." As stated, he ceased to be the owner of the team before becoming of age, and thereafter was not in control of anything received from defendant. There was then nothing in his keeping to restore.

3. The court charged the jury that the damages to be allowed "will be the difference between the reasonable market value of the four lots in question at the time of the disaffirmance of the contract of the sale of the horses and the value of the lots at the time of the purchase of said lots by plaintiff, if you find there is any difference in said values, to which you will add the amount you find plaintiff has paid on the same, with interest thereon at 6 per cent. from the time of the payments up to this time." This instruction, while not strictly accurate, was too favorable to defendant. The plaintiff was entitled to recover the market value of the lots at the time of the disaffirmance, less the amount owing on the contract of purchase, with interest added as stated. There was no evidence tending to show their value at the time of purchase less than the price agreed upon. If the jury found it greater, plaintiff, under this instruction, was deprived

Digitized by Google

f the difference. Merely allowing what he ıad paid, as proposed by appellant, would ıave overlooked this difference, and any posible increase in value. But it is argued hat the fact of exchanging his interests in he lots for the team was a disaffirmance of he land contract, and hence but the amount ıaid thereon should be recovered. On the ontrary, it was a recognition by both parles of the validity of that contract, and a ale of it for the horses. Leacox v. Griffith, '6 Iowa, 93, 40 N. W. 109, is not in point. 'here the sale of chattels was wholly inonsistent with the recognition of the mortage executed thereon by the minor, while ıere, in taking the team, he asserts his ownership of the lots.

The judgment is in accordance with the aw, and must be affirmed.

GOLDSTEIN v. MORGAN, Sheriff.

(Supreme Court of Iowa. Oct. 20, 1903.)

FRAUDULENT CONVEYANCES—BILL OF SALE—GOOD FAITH—EVIDENCE—STATEMENTS BY DEBTOR — VALUE — TRIAL — CROSS-EXAMINATION—CONTINUANCE — APPEAL — ASSIGNMENTS OF ERROR.

1. Where goods attached by defendant were :laimed by plaintiff under a bill of sale exe:uted by the debtor on the day of the attachnent, evidence of the debtor's statements as :o his financial condition, made to witness be:ore the execution of the bill of sale, were com)etent on the question of fraud.

2. On an issue as to whether a bill of sale of ıis goods by a debtor, executed on November 17th, was fraudulent, testimony by a competent witness as to the value of the goods on No'ember 6th was admissible; there being evilence that there was no material change in the stock between the two dates.

3. Where, in an action between attaching :reditors and one claiming the goods by bill of ıale from the debtor, the debtor was a witness 'or the creditors, and testified to his liabilities ınd other matters tending to show fraud, but ıot to the value of his property, he could not ›e cross-examined as to the value of his real state.

4. A party cannot complain of matter brought ıut by him on cross-examination.

5. The refusal of a motion for continuance, ıased on the ground of surprise, and of a moion to amend the motion for continuance after ounsel's admission that the witnesses would estify as alleged in the motion, was largely in he discretion of the trial court.

6. An assignment of error, merely saying that he court erred in overruling a motion for new rial, is not sufficient to present for review any ıuestion involved in the motion.

7. During the opening statement of the case ›y defendant's counsel, plaintiff's counsel obected by saying, "Let the record show an exeption to this," or "to this line of statement," ınd at other times made exceptions to remarks vithout securing rulings thereon. *Held*, that here was nothing on which to base assignnents of error.

8. Under the head of "Assignments of Eror," without any introductory statements, vere placed "Misconduct of Counsel in Argunent," "Misconduct of Counsel in Opening Statement," etc. *Held*, that these were mere declaratory statements, and, being made without reference to any rulings by the trial court, were insufficient.

Appeal from District Court, Pottawattamie County; A. B. Thornell, Judge.

Action of replevin to recover a stock of boots and shoes, which had been levied upon by defendant, sheriff, under writs of attachment issued in certain actions against one E. E. Adams. Trial to a jury, verdict and judgment for the defendant, and plaintiff appeals. Affirmed.

Alex A. Altshuler and Flickinger Bros., for appellant. Finley Burke, for appellee.

DEEMER, J. This case involves no new principle of law. Plaintiff claims a right to the possession of the property under a bill of sale therefor executed by E. E. Adams on or about November 17, 1899. Defendant, as sheriff, levied on the property on the same day under writs of attachment issued in actions instituted against E. E. Adams, and he claims that plaintiff's bill of sale was and is fraudulent and void, for that it was executed with intent to hinder, delay, and defraud Adams' creditors. The allegation of fraud was denied by plaintiff, and on these issues the case was submitted to the jury.

Alex Altshuler, an attorney for plaintiff, was a witness in the case, and testified to having drafted the bill of sale; to the payment of the purchase price for the goods ($900); and to the delivery of the keys to the building in which the goods were kept to plaintiff. On cross-examination, defendant's counsel, for the purpose of showing his interest in the case, interrogated him as to what was done with certain depositions taken on behalf of plaintiff at his office in Omaha. The questions, in so far as they were objectionable, were not allowed to be answered, and no answer given by the witness was prejudicial, for the reason that he denied any imputations suggested by the questions. A witness for defendant was asked as to what Adams had told him, before the execution of the bill of sale, about being involved and indebted. This was objected to as hearsay and incompetent. The objection was overruled, and the witness answered, but his answer was not responsive to the question. No motion was made to strike the testimony, but, if it had been made, it should have been overruled, for the reason that it tended to show fraud on the part of Adams in making the bill of sale. A witness who had examined the stock of boots and shoes on or about November 6th, and who showed his competency to testify as to value, was asked to give the value of the goods on the date last named. Objection to the question was overruled. As there was evidence to show that there had been no material change in the stock from November 6th to November 17th, the evidence was competent. Its value was for the jury. The same may be said regarding other testimony regarding values.

¶ 5. See Continuance, vol. 10, Cent. Dig. § 17.

Digitized by Google

tending to show actual fraud, was asked on cross-examination regarding some real estate which it is claimed he owned. Objection was sustained to this line of evidence, because not cross-examination.

The ruling was correct. He was not asked on direct examination regarding his property.

Complaint is made of certain rulings relating to the testimony of witness Duncan. As the matter was brought out by plaintiff's counsel on cross-examination, he is in no position to complain. Adams was used as a witness for defendant. After he had been examined in chief by defendant's counsel, and cross-examined at some length by plaintiff's counsel, they filed a motion for a continuance, based on surprise. It was alleged in the motion that the witness had previously stated to plaintiff's counsel that the sale was in good faith, and offered to give testimony to that effect, and that he had conspired with defendant to defeat the plaintiff, and to assist him (defendant) in compelling plaintiff to pay his (Adams') indebtedness. He further alleged that he had not had time to investigate the matter and to look up evidence, but gave the names of three or more witnesses, with a statement of what they would swear to. The court indicated that he would sustain the motion, whereupon the defendant admitted that the witnesses named in the affidavit would, if present, testify as therein stated, and the motion was thereupon overruled. After the ruling, plaintiff's counsel asked leave to amend their motion. This motion was denied, except as to one matter, and the case proceeded.

Complaint is made of the various rulings. They were each so far discretionary that we do not feel like interfering. As a general rule, a motion to amend a motion for a continuance, after a ruling thereon based on counsel's admission that the witnesses would testify as claimed, is not in order. At any rate, the trial court is vested with a large discretion in such matters. The only proper exception in the record relates to the ruling on the motion for leave to amend, and this, as we have seen, was not erroneous. Had there been an exception to the ruling on the original motion, we should not be inclined to interfere with the court's discretion. State v. Stegner, 72 Iowa, 13, 33 N. W. 340.

2. Misconduct of counsel in opening statement, in insinuations during the trial, and in argument of the case to the jury was one of the grounds of the motion for a new trial. It should be remembered that this is a law case, which comes to us for review upon errors assigned. These errors must be such as were committed by the trial court; in other words, in law actions the trial court must have had an opportunity to pass upon the matter, and the ruling, when made, must mental propositions. See Code, §§ 4105, 4106, and cases cited thereunder.

Plaintiff filed a motion for a new trial based on many grounds, among them being misconduct of counsel. The motion was overruled, and exception taken. The assignment of error is omnibus in character, and simply says that the court erred in overruling the motion for a new trial. This is not sufficient to present any question involved in the motion for review. Huss v. R. R., 113 Iowa, 343, 85 N. W. 627.

The only other manner in which the record presents any question is as follows: During the opening statement of the case, counsel for defendant referred to certain statements made by plaintiff's counsel regarding defendant's line of defense; and while proceeding with his side of the case, plaintiff's counsel twice made this record. "Let the record show an exception to this, or to this line of statement." At another time, plaintiff's counsel objected to a statement as prejudicial, but no ruling was made, on the objection. Once during the argument plaintiff's counsel made an exception to a remark made by defendant's counsel about pawnshops. No ruling was made on this exception. So far, it will be observed, there were no rulings of the trial court on which an assignment of error might be based. Indeed, the assignments, except the omnibus ones to which we have referred, do not challenge any rulings. They simply read under the head of "Assignment of Error," and without any sort of introductory statement, as follows: "Misconduct of Counsel in Argument and c.," "Misconduct of Counsel in Opening Statement and c.," "Misconduct of Counsel in Interrogating Witnesses and c." Manifestly, these do not refer to any rulings of the trial court. They are simply declaratory statements of alleged misconduct, and do not refer us to any ruling made by the trial court. They are clearly insufficient to present any question for review. Copeland v. Ferris (Iowa) 92 N. W. 699.

The matter of misconduct is not properly presented by the record. We have examined the argument, and while defendant's counsel went to the very verge of propriety, we should not feel disposed to reverse the case, even if the matter had been properly presented. Much of what was said was called out by counsel on the other side, and in many of his statements counsel was simply accepting a challenge made by plaintiff's counsel. While not disposed to relax the rules in such matters, it is sufficient to say that we are not justified, under the record now before us, in reversing the case for misconduct.

Appellant's motion to strike and to tax costs of appellee's abstracts is overruled. The judgment is affirmed.

Digitized by Google

(Supreme Court of Iowa. Oct. 17, 1903.)

UNICIPAL CORPORATIONS — MARKETS — ESTABLISHMENT—USE OF STREETS—NUISANCE — ORDINANCES — SALE OF COMMODITIES — WEIGHING—REASONABLENESS — RESTRAINT OF TRADE.

1. Code, § 717, provided that cities shall have ower to establish and regulate markets and ales, and provide for the measuring or weighg of merchandise, and to regulate or prohibit uckstering in the markets and the stands or laces to be occupied by vendors, and to auorize the arrest of any person violating its egulations, etc. *Held*, that such section auorized a city to adopt an ordinance locating city market on a certain street, and providing at corn and other articles should not be eighed or sold in any other street in the city.

2. The establishment of a public market in a ortion of a street by a city ordinance did not onstitute a nuisance per se, where such mart constituted only a temporary or partial obtruction of the street.

3. Where corn was sold for grinding at a oller mill within the corporate limits of a city, was within a city ordinance requiring corn old for consumption within the city to be eighed on the city scale.

4. A city ordinance requiring corn sold for onsumption in the city to be weighed on a city cale was not invalid as an unreasonable retraint of trade.

Appeal from District Court, Linn County; . H. Preston, Judge.

The defendant was tried for the violation f a city ordinance regulating the sale of ommodities on its streets. A verdict was irected for him, and the state appeals. Reersed.

John N. Hughes, for the State. Grimm, Trewin & Moffitt, for appellee.

SHERWIN, J. The city of Cedar Rapids dopted an ordinance establishing and reguating a city market. It provided for city cales, and required all hay, straw, oats, or orn sold within the city, and for consumpion therein, to be weighed thereon. It also rohibited the sale of commodities upon any f the streets of the city not included in the ublic market place. The city, after the doption of this ordinance, located the city arket on First street. The defendant sold load of corn on one of the other streets of he city, and without having it weighed, as rovided by the ordinance above referred to. After hearing the evidence in the case, the istrict court directed a verdict for the deendant.

That the city of Cedar Rapids had the ower to enact an ordinance establishing nd regulating a city market cannot be seriusly questioned. This power is specifically iven by section 717 of the Code, and has een declared by numerous decisions of this ourt, and the power thus conferred upon the ity necessarily carries with it the power to rohibit the sale or weighing of commodiies elsewhere than at the place established s such public market. City of Davenport v. The Town of Anita et al., 73 Iowa, 325, 35 N. W. 244; Miller v. City of Webster City, 94 Iowa, 162, 62 N. W. 648. Indeed, this power is not seriously questioned by the appellee, but his principal contention is that the establishment of a public market on one of the streets of the city created a nuisance per se, and that the ordinance was therefore void. It is a general principle that the public has a right to the free and unobstructed use of a street for passage to its utmost extent, and that any unauthorized obstruction thereof, which unnecessarily interferes with such use, is a public nuisance. It is undoubtedly true that the erection of a market building in a street would be an unauthorized use of the street, and would create a nuisance per se. Pettit v. Grand Junction (Iowa) 93 N. W. 381. But not every use of a public street for other purpose than for travel thereover creates a nuisance per se. Temporary or partial obstruction of streets may be justified, on the ground of public or private necessity (see note in 1 Am. St. Rep. 840); and it will hardly be claimed that every use of a street for the purpose of barter will constitute a nuisance per se, for if such were the case, every person who stopped for a moment on the street with a load of produce, and during the time sold it, and then moved on, without having in any way interfered with the use of the street by others, would be guilty of unnecessarily and unduly obstructing said street, and of creating a public nuisance. In Incorporated Town of Spencer v. Andrew & McQueen, 82 Iowa, 14, 47 N. W. 1007, 12 L. R. A. 115, we held that the town had the power to permit a private scale in the street, where it did not unduly infringe the public use of the street; and surely, if such license may legally be given a private citizen, the city itself may so use a street for the public convenience. It may possibly be that the actual use of First street for market purposes is such as to constitute a public nuisance, but there is no evidence on this point, and the mere location of a public market there not creating a nuisance per se, we must hold the act a valid exercise of municipal power.

It is also contended by the appellee that the defendant was not obliged to weigh his load of corn on the city scale, because the ordinance only requires such weighing where the produce is for consumption within the city. This position is not well taken, however, for the reason that the corn was in fact sold for grinding in a roller mill within the corporate limits. Such use would be a consumption, within the meaning of the ordinance. 2 Century Dict., 1220. That the market requirement under consideration is not an unreasonable restraint of trade is settled by the authorities heretofore cited.

The court erred in directing a verdict for the defendant, and the case is reversed.

¶ 2. See Municipal Corporations, vol. 36, Cent. Dig. 1431.

Digitized by Google

(ROBERTSON, Intervener).

(Supreme Court of Iowa. Oct. 17, 1903.)

DEEDS—CONSTRUCTION AS TRUST—FRAUD—RIGHTS OF WIDOW—PAROL EVIDENCE—PARENT AND CHILD — CONTRACTS — RIGHTS OF HEIRS—BURDEN OF PROOF.

1. Where a deed recited a consideration in hand paid, neither the grantor's heirs nor his widow could establish a trust of the land conveyed by showing that nothing was in fact paid therefor.

2. Where a deed purported to be an absolute conveyance of the land, it could not be converted into an express trust by parol.

3. Where a father conveyed certain real estate to his son by absolute deed, and the son paid to his father's wife $2,200 for signing the deed, she was not entitled to set such deed aside after her husband's death, and recover her distributive share of the land conveyed, on the ground that the deed was made to defraud her of her rights in her husband's property, and that the consideration which she received as coming from the grantee was in fact the property of her husband.

4. Where, after a grantor's death, his widow was paid $600 in full for her first year's support and for her interest in the decedent's estate, she was not entitled to sue to set aside a deed of her husband's property to his son, and to recover her distributive share thereof, on the ground that it was made to defraud her of her interest therein, without tendering a return of the money she had received.

5. Where a grantor conveyed certain property to his son in order to defraud his wife of her right of dower therein, the fraud having been participated in by the grantor, the deed was binding as against his heirs and devisees, and as against every one except his wife.

6. Where a grantee of certain real estate by deed absolute on its face accepted the same, with a promise that he would hold the title for the grantor's grandchildren, his subsequent denial of the promise or his failure to fulfill the same did not constitute a fraud sufficient to convert the deed into an instrument creating a trust.

7. Where certain land was conveyed by a father to his son by a deed absolute on its face, the fact that the son had acted as his father's agent in other matters did not impose on the son the burden of proving that the deed was intended to be an absolute conveyance, and not an instrument creating a trust for the grantor's grandchildren, as contended by plaintiffs.

Appeal from District Court, Hardin County; W. S. Kenyon, Judge.

Plaintiffs, as successors in interest and devisees under the will of Anthony Robertson, deceased, brought this action to have a conveyance of land made by said Anthony Robertson and wife to defendant W. R. Robertson declared to be a trust, and that they be adjudged to be the owners of the undivided two-thirds of said real estate. Defendants admitted the conveyance, but denied its alleged trust character. Mary J. Robertson, the widow of Anthony, intervened, and in her petition alleged the execution of the deed to the defendant W. R. Robertson, but averred that it was obtained through fraud, and without any consideration passing to her or to her husband, and she asked that the deed be canceled, and she be given her distributive share in the property. Defendant W. R. Robertson intervener $2,200 to induce her to join in the deed from Anthony Robertson, and various other matters as an estoppel upon her. He also pleaded an estoppel and the statute of limitations as against the claims of plaintiff and the intervener. The plaintiffs and intervener denied the affirmative allegations made by defendant W. R. Robertson, and on these issues the case was tried to the court, resulting in a decree dismissing plaintiffs' and intervener's petitions, and they appeal. Affirmed.

John Porter and W. J. Moir, for appellants Willis and others. Huff & Huff, for appellant intervener. Albrook and Lundy, for appellees.

DEEMER, J. On the 9th day of January, 1889, Anthony Robertson, now deceased, and his wife, Mary, the intervener in this case, joined in a conveyance of the land in controversy to defendant W. R. Robertson. That conveyance was a warranty deed, and recited a consideration of $8,000 in hand paid by the grantee. Anthony Robertson died testate June 18, 1900, and while he did not mention the property in controversy in his will, he attempted to dispose of all his property, real, personal, and mixed. Plaintiffs and three of the defendants are legatees under the will, and, as such, claim the property in controversy, consisting of something over 350 acres of land in Hardin county. As defendant W. R. Robertson holds the title to the land under a deed reciting the payment of a consideration, he, of course, must prevail, unless plaintiffs and intervener have established the fraud pleaded by them, or have shown such a trust as the law will recognize.

As the deed recites a consideration in hand paid, neither plaintiffs nor intervener can establish a trust by showing that nothing was in fact paid for the land. This is fundamental, and we need not cite authorities to sustain so elementary a proposition. But see Acker v. Priest, 92 Iowa, 617, 61 N. W. 235, and cases cited. Moreover, neither plaintiffs nor intervener can defeat the deed, nor convert it into an express trust by parol, for this would nullify the statute of frauds. McClain v. McClain, 57 Iowa, 167, 10 N. W. 333. This, of course, is practically conceded by appellants' counsel. Their claim, as we understand it, is that defendant W. R. Robertson obtained title to the property by fraud, and that in consequence a trust arose, which may be established by parol. There is no claim of resulting trust, nor could there be, under the facts disclosed by this record. The conveyance was by Anthony Robertson, the owner of the land, and his wife, Mary J., directly to defendant W. R. Robertson, a son of Anthony, and there is no room for the doctrine of resulting trust. Before proceeding to the real point in the case, it may be well to again

Digitized by Google

state a fundamental principle applicable to all such cases. It is this: the legal title to real estate cannot be devested except upon testimony which is clear, distinct, and satisfactory, and this evidence must be such as goes directly to prove the facts necessary to create the trust. Culp v. Price, 107 Iowa, 136, 77 N. W. 848, and cases cited. It should also be remembered that this conveyance was to a son of the grantor, and the presumption of advancement in such cases must also be reckoned with.

We shall first take up intervener's claim. She is the widow of Anthony Robertson, and is seeking, not only to set aside the deed, but to have her distributive share allotted to her. There is no doubt that she received in notes and money $2,200 for signing the deed to W. R. Robertson. The notes were afterwards paid, and she received, used, and has had the full benefit of the money promised her when the conveyance was made, which she has never tendered back. She claims, however, that the money really came from Anthony Robertson, who was endeavoring to defraud her of her interest in his property. We do not think she is in position to make such claim. She received the money as coming from W. R. Robertson, and is now seeking, not only to hold this money, but to obtain her full distributive share of the decedent's property as well. Equity will not tolerate any such claim. Anthony may have given this money to his son—indeed, that would be the presumption, even were it shown that the money was in fact furnished by Anthony, which we do not believe—and, if so, it would be presumed to have been an advancement to the son. But, in any event, she cannot retain the money and also have a distributive share allotted to her. If the money belonged to Anthony, it should be returned, in order that it may be administered upon as a part of the estate. Aside from this, it is clearly shown that after the death of Anthony, intervener was paid $600 in full for her first year's support and for her interest in the decedent's estate. These facts dispose of the intervener's appeal.

2. Recurring now to plaintiffs' appeal, and to the only issue which we may consider—and that the claim of constructive trust—we find that the exact contention made by them is that the deed in question was not for the purpose of transferring the beneficial ownership of the property to W. R. Robertson, but to aid Anthony Robertson in freeing the same from any dower claim or right of his wife, Mary J., with whom he was then having trouble, and to save the property for his grandchildren by a former wife, pursuant to the terms of his will. There is nothing here of a fraudulent character, unless it be an intended fraud upon the wife, who, as we have seen, is in no position to advantage herself of the fraud. Moreover, if there was fraud. Anthony Robertson participated therein, and neither he nor his heirs or devisees may avail themselves thereof. The conveyance was good as to every one save the wife, and, even if it were not, the grantor was so involved in the fraud that a court of equity will not permit him or his heirs or representatives to take advantage thereof. That he who comes into a court of equity must do so with clean hands is a time-honored maxim, and it is also well settled that no one may take advantage of his own wrong.

The claim that W. R. Robertson was to hold the property for Anthony Robertson's grandchildren cannot be established by parol, for this would be imposing an express trust upon a deed which contains no mention of such a thing. Even if it be conceded that defendant W. R. Robertson took the deed with the promise and understanding that he should hold the title for the grandchildren of the grantor, his denial of the promise, or his failure to fulfill the same, would not be such a fraud as would convert the deed into an instrument of trust. McClain v. McClain, 57 Iowa, 167, 10 N. W. 333. Of course, if it had been shown that Anthony Robertson was induced by false suggestion or immoral concealment to make the deed in question to W. R. Robertson, we would have a different question. A court of equity will always interfere to prevent the obtaining of an estate by fraud, notwithstanding the statute of frauds. Had defendant Robertson induced the making of the conveyance by fraud, or had he promised to execute some instrument, showing the trust character of the conveyance, which he failed to do, this would be a clear case for the intervention of equitable relief. Gregory v. Bowlsby (Iowa) 88 N. W. 822; Kennedy's Heirs v. Kennedy's Heirs, 2 Ala. 571, and cases cited. But there is absolutely no evidence of either. There was no relation of trust or confidence between father and son, or, if there was, there is no evidence that the son was trying to take advantage of the situation. The conveyance was made at the instance of the father, who called the son, who was then living in Kansas, to this state, where the conveyance was made at the suggestion of the grantor. The father was in no manner deceived or imposed upon by the son. If there was any default on the part of the son, it lies in the fact that he has repudiated the alleged parol agreement or trust, and refuses to turn the land over to the devisees under the will of his father. This does not, in itself, constitute a fraud. If it did, the statute of frauds might as well be repealed, for if the denial of an alleged parol trust or the refusal to carry it out constitutes a fraud, there could never be a case where the statute would be able to prove a barrier to the introduction of parol evidence. This is clearly pointed out in Gregory v. Bowlsby, supra, and need not be further elaborated.

Digitized by Google

It appears that in some matters W. R. Robertson acted as the agent of his father, and in view of this fact it is contended that the burden is on him to keep a record of the transactions, so as to fully and completely explain them, and to make a satisfactory accounting. This may be conceded as to all matters wherein defendant acted as agent, but it does not require proof from him to show that the deed was not an instrument of trust. The deed must be accepted as a verity in the first instance, and the burden is on the plaintiff to show that it was obtained through fraud, or that by reason of other matters it was not absolute in character. Doubtless, in so far as it appears that no consideration was paid, the burden is on defendant to show that he has paid the full amount promised; but this is as far as the rule is applicable to such a case as this. The deed, although made to a son, and to a son who was acting as agent for the father in other matters, must be treated as a deed—that is, according to its purport—and notwithstanding the difficulties under which plaintiffs must labor, they have the burden of proof in impeaching it, and this they must do by clear, satisfactory, and convincing evidence.

It is said that W. R. Robertson, who was appointed executor of his father's will, has failed to account for any considerable property, although it was generally understood that he was worth $20,000 before he died. This is a matter of little importance in this litigation. Other remedies are open to plaintiffs if defendant W. R. Robertson has failed to account for his deceased father's property. There is no attempt in this action to have him account, and the evidence as to other property is of little or no value.

If defendant did not pay the full purchase price for the land, a remedy is open to compel him to make payment, but it is not by action to establish a trust. We have so far treated the case largely from plaintiffs' standpoint. It should be said, in fairness to the defendant, that he denies any of alleged promises pleaded by plaintiffs, and claims that he purchased the land from his father, paying $2,200 of the purchase price to his mother and the remainder to his father. There is evidence, also, of a settlement with the father before his death, and a written receipt, acknowledging full satisfaction of all matters down to April 26, 1892.

The case is not an unusual one, and the principles of law involved are not new. Indeed, there is little dispute over the law. The trouble, as usual, is over its application. Plaintiffs say there is a constructive trust because of fraud. This, as we view it, they have failed to establish by the quantum of evidence required. Our conclusions find support in the following, among other, cases: Shaffer v. McCrackin, 90 Iowa, 578, 58 N. W. 910. 48 Am. St. Rep. 465; Rogers v. McFarland, 89 Iowa, 286, 56 N. W. 504; Maroney v. Maroney (Iowa) 66 N. W. 911; Verzier v. Convard (Conn.) 52 Atl. 255; Mallow v. Walker (Iowa) 88 N. W. 454.

The decree is right, and it is affirmed.

WEAVER, J., taking no part.

LANE v. WRIGHT et al.

(Supreme Court of Iowa. Oct. 17, 1903.)

TAX SALES—JUNIOR JUDGMENT CREDITOR—PURCHASE OF TAX CERTIFICATE—REDEMPTION—EQUITY.

1. Where the holder of a junior judgment lien on certain land purchased the same on execution on his judgment and thereafter purchased an outstanding tax lien against the property, under which he obtained title, the purchase of such tax certificate by him would be construed in equity as a redemption, since he would not be permitted thereby, as against the holder of the senior judgment lien, to absorb the land, which was the entire fund for the payment of both judgments.

Appeal from District Court, Polk County; W. F. Conrad, Judge.

Action in equity to quiet plaintiff's title to land in Polk county. Decree dismissing the petition, and plaintiff appeals. Reversed.

John Newburn and C. C. Cole, for appellant. Carr, Hewitt, Parker & Wright, for appellees.

WEAVER, J. The record is somewhat confused as to the manner in which this case was disposed of by the trial court. The petition was amended several times, and was demurred to in its amended as well as original form, and the abstract states that the demurrer was sustained. But it is also averred that there was a trial to the court, testimony introduced, and, after both parties had rested, a decree was entered which recites a hearing and trial upon evidence, and adjudges plaintiff not entitled to the relief demanded. It is, perhaps, not very material whether we treat the final judgment as entered upon the trial of an issue of fact or upon the demurrer, but we are disposed to regard the recitals of the decree as conclusive, and treat the case as having been tried and decided upon its merits. The following statement of facts will make plain the nature of the dispute presented by the appeal: The plaintiff, Lane, and the appellee Wright were severally the holders of judgment liens upon the land in controversy; the former being senior in point of time. Under an execution entered upon the junior judgment the land was sold to Wright June 20, 1896. In the following year, under execution entered upon the senior judgment, the same land was sold to Lane, who took a sheriff's deed therefor January 26, 1899. At the date of the sheriff's sale to Wright there was an outstanding and unredeemed sale of said land for delinquent taxes, the certificate of which was held by

Digitized by Google

one Tris. Wright did not take a sheriff's deed under his execution sale, although no redemption therefrom was ever made, but obtained an assignment of the certificate of tax sale, upon which the county treasurer issued a tax deed January 3, 1898. Thereafter, and before this suit was commenced, Wright conveyed the land by quitclaim deed to the defendant Richart. There is question made of the sufficiency of the description by which the land was taxed, and by which it was sold at tax sale; but for the purposes of this branch of the case we assume the description to be correct. The point made, and one which we think decisive of this appeal, is that Wright, as the holder of a lien upon the land, and of a sheriff's certificate of a sale thereof, cannot be allowed to defeat the senior lien by obtaining a tax deed, and that in equity his purchase of the certificate of tax sale must be considered and treated as a redemption. We regard it as a well-settled proposition under the decisions of this court that, where several persons hold claims which are liens upon the same land, equity will not permit one of the lienholders to absorb the common fund by purchasing the land at tax sale. In Fair v. Brown, 40 Iowa, 209, the plaintiff was the holder of a mortgage lien upon certain land. The defendant Weiser was the holder of a senior judgment lien and of a junior mortgage upon the same premises, and sought, as did the appellee Wright in this case, to defeat plaintiff's lien by the purchase of outstanding certificates of tax sale and obtaining deed thereon. As is now done by the appellee, Weiser sought to escape the point made against the tax deed by urging that he was under no legal obligation to pay the tax and therefore could rightfully make the purchase and acquire an indefeasible title. To this contention we said that, notwithstanding he was bound neither by law nor contract to pay the delinquent tax, yet "the land is a common fund for the payment of plaintiff's mortgage and defendant's liens. Defendant was authorized to redeem from the tax sale. Rice v. Nelson, 27 Iowa, 148. Equity will not permit him to acquire the title for an inconsiderable sum, when he was authorized to remove the trifling incumbrance by redemption. Though not bound to pay the tax, yet it was his right to do so to protect his own liens. He cannot obtain that protection by pursuing a course that will deprive the mortgagee of his security, and leave the mortgagor to sustain the weight of liens which are personal judgments, after being deprived of his property by tax title. Equity will relieve against such oppression, and teach the grasping creditor moderation in his demands, and that he cannot destroy others to build up his own fortunes." In Garrettson v. Scofield, 44 Iowa, 37, we cited and approved this principle, saying: "The defendant Scofield and the plaintiff were both mortgagees, and both claiming interest in the land to the extent of their respective mortgages; and while it is true there was no absolute duty resting upon either to pay the taxes, yet they had such an interest in the land as to make it necessary to do so in order to properly protect the title. Under these circumstances we do not believe that the payment of taxes by either at the tax sale should entitle him to the statute penalties." The same doctrine was reiterated in Eck v. Swennumson, 73 Iowa, 423, 35 N. W. 503, 5 Am. St. Rep. 690. See, also, Manning v. Bonard, 87 Iowa, 648, 54 N. W. 459, and Cowdry v. Cuthbert, 71 Iowa, 733, 29 N. W. 798. In each one of the cited cases there was no legal obligation to pay the taxes resting upon the party asserting the tax title, but in each it was held that a person having the right to redeem from tax sale cannot, by refusing or neglecting to exercise that right and becoming a purchaser at the sale, extinquish the liens held by others upon the property so obtained. As is illustrated by these precedents, it is not required that a party shall be vested with ownership of the property in the sense of holding title to it in order to come within the influence of this rule. The term "owner," as used in determining who may redeem from tax sale, has been construed to include mortgagees, judgment creditors and holders of contingent interests in the land affected by the sale. Adams v. Beale, 19 Iowa, 61; Swan v. Harvey (Iowa) 90 N. W. 489. The principle which involves the rule denying the right of one lienholder to obtain a tax title to the disadvantage of others in similar relation to the common security seems to be that, as the law gives each of them the right to protect the security by making a redemption, and gives the redemptioner a preferred lien to the extent of his disbursement for that purpose, it would be inequitable to permit him to waive such right and become a purchaser at the sale, and thus, by an expenditure not greater than would have been required to pay the tax, exclude his fellow lienholders from all participation in the common fund. The proposition seems to be entirely just, while the opposite rule would often bring about manifestly inequitable results. We conclude, therefore, that the purchase of the certificate of tax sale by the appellee Wright must be treated as a redemption, and the tax deed issued to him on such sale be declared void. The appellee Richart holds under a quitclaim deed from his codefendant Wright, and occupies no stronger position in this controversy than his grantor. Our views upon this branch of the case render it unnecessary to consider the question raised concerning the description of the land as advertised and sold by the treasurer.

The judgment below is reversed, and cause remanded for further proceedings in harmony with this opinion. Reversed.

Digitized by Google

STATE v. CHICAGO, M. & ST. P. RY. CO.

(Supreme Court of Iowa. Oct. 19, 1903.)

RAILWAYS—CROSSINGS—FAILURE TO STOP—PENALTY.

1. Code, § 2073, declares that any engineer who fails to bring his train to a full stop before crossing an intersecting railroad on the same level shall forfeit $100, and that the railroad shall forfeit the sum of $200. *Held* that, where the train failed to stop because the brakes were defective, so that the engineer was not guilty of the offense, the railroad was not liable.

2. The offense was not committed if the engineer attempted to stop the train, but was unable to do so.

3. The statute was not unconstitutional as imposing a penalty on a railroad for the offense of its engineer, as it merely exacted a duty of the corporation of seeing that its employé acted in obedience to the statute.

4. The burden on the state of proving that a railroad engineer was liable to the penalty imposed by Code, § 2073, for failure to stop his train before crossing an intersecting railroad on the same level, was not shifted by proof that the train did not stop.

5. In an action against a railroad for a penalty for failure to stop its train before crossing an intersecting road, the general rules prevailing in civil actions govern, and the state is not bound to prove the commission of the offense beyond a reasonable doubt.

Appeal from District Court, Story County; J. H. Richard, Judge.

The defendant's line of road crosses that of the Northwestern Railroad Company at Slater on the level. On the 14th day of February, 1902, the defendant, through its engineer, pulled its freight train over said crossing without stopping as required by section 2073 of the Code, and in this action recovery of the penalty as therein provided was claimed. Trial to jury resulted in verdict and judgment for the state. The defendant appeals. Reversed.

J. C. Cook, E. H. Addison, and H. Loomis, for appellant. G. A. Underwood, for the State.

LADD, J. The defendant admitted the failure of its train to stop within 800 feet and more than 200 feet from the crossing, and interposed the defense that the engineer in charge did all he could to stop it, but that, owing to the brakes not working in the usual manner, the momentum of the train carried it over the crossing. The court submitted the case to the jury on the theory that the burden of proof was on the defendant, in order to exonerate itself from liability, to show by a preponderance of evidence that the failure to stop was not due to any negligence on the part of its employés in operating the train, or of the company in not having proper appliances, or in keeping those had in proper condition, and that the company might be liable even though the engineer was not. Possibly that should have been the law, but it was not so written by the Legislature. The statute in question reads: "All trains run upon any railroad in this state which intersects or crosses any other railroad on the same level shall be brought to a full stop at a distance of not less than two hundred and not more than eight hundred feet from the point of intersection or crossing, before such intersection or crossing is passed, except as otherwise provided in this chapter. Any engineer violating the provisions of this section shall forfeit one hundred dollars for each offense, to be recovered in an action in the name of the state for the benefit of the school fund, and the corporation on whose road the offense is committed shall forfeit the sum of two hundred dollars for each offense to be recovered in like manner." Section 2073, Code. The latter part of the statute is purely penal in character, with the evident object of punishing the offender, rather than afford a remedy for the wrongful act. In this respect it differs radically from provisions awarding damages flowing from certain acts, such as the setting out of fire. Its meaning, then, cannot be extended beyond the terms employed. But one offense is denounced by it, and that is the omission of the engineer to stop the train as required. The first sentence commands what shall be done—defines a duty; the first clause of the second sentence imposes a penalty on any engineer for "each offense" of omitting such duty; the second clause of the second sentence adds a penalty against the corporation "on whose road such offense is committed." To what do these last words refer? Manifestly, to the offense of which the engineer is guilty. No other is mentioned in the section. The statute cannot be fairly read otherwise. The thought seems to have been that, as the engineer controls the train, the fault in failing to stop as required is primarily his, and secondarily that of the company for which he acts. There is no ground for holding that the company may be liable independent of any fault of the engineer. The forfeiture of the corporation is made to depend upon his guilt of the offense defined, and upon that only.

2. As the statute is purely penal in character, it ought not to be construed as fixing an absolute liability. A failure to stop may sometimes occur notwithstanding the utmost efforts of the engineer. In such event his omission cannot be regarded as unlawful. The law never designs the infliction of punishment where there is no wrong. The necessity of intent of purpose is always to be implied in such statutes. An actual and conscious infraction of duty is contemplated. The maxim, "Actus non facit reum nisi mens sit rea," obtains in all penal statutes unless excluded by their language. See Regina v. Tolson, 23 Q. B. Div. 168, where it was said, "Crime is not committed where the mind of the person committing the act is innocent." See, also, Sutherland on Statutory Construction, § 354 et seq. No doubt many statutes impose a penalty regardless of the intention of those who violate them, but these ordi-

Digitized by Google

'ertence. But even then it can hardly be ıupposed the offender would be held if the ıct were committed when in a state of somıambulism or insanity. As it is to be asıumed in the exercise of the proper care that he engineer has control of his train at all imes, proof of the mere failure to stop makes ıut a prima facie case. But this was open o explanation, and if, from that given, it was made to appear that he made proper preparation, and intended to stop, and put 'orth every reasonable effort to do so, he should be exonerated. See Furley v. Ry. Co., 90 Iowa, 146, 57 N. W. 719, 23 L. R. A. 73. This, however, did not shift the burden of proof. It was still on the state to show that the offense had been committed (see Chaffee v. U. S., 18 Wall. 517, 21 L. Ed. 908); not, however, by proof beyond a reasonable doubt, as contended by appellant. Suit for a penalty is by ordinary proceedings, and the general rules prevailing in civil actions should govern. Ordinarily, a party to succeed must establish the averments of his petition by a preponderance of evidence only. There are exceptions in equitable actions, in which clear and satisfactory evidence is required for the reformation of an instrument and the like, but we now recall no instance of an action to be prosecuted by ordinary proceeding in which more than a bare preponderance of the evidence is exacted. McAnnulty v. Seick, 59 Iowa, 586, 13 N. W. 743; Coit v. Churchill, 61 Iowa, 296, 16 N. W. 147; Truman v. Bishop, 83 Iowa, 697, 50 N. W. 278; Callan v. Hanson, 86 Iowa, 420, 53 N. W. 282; Jamison v. Jamison, 113 Iowa, 720, 84 N. W. 705. Even though a criminal act be the basis of recovery, the same rule obtains. Welch v. Jugenheimer, 56 Iowa, 11, 8 N. W. 673, 41 Am. Rep. 77; Riley v. Norton, 65 Iowa, 306, 21 N. W. 649. An action for a penalty or forfeiture should form no exception to the rule. A civil liability only is involved, and none of the reasons for exacting full proof, save the imputation of wrongdoing as in a criminal action, obtain. People v. Briggs, 114 N. Y. 56, 20 N. E. 820; Hitchcock v. Munger, 15 N. H. 97; State v. Kansas City, etc., R. Co., 70 Mo. App. 634; Hawloetz v. Kass (C. C.) 25 Fed. 765; 16 Ency. P. & P. 295. As said in the first of the above cases: "The purpose of the action is not the punishment of the defendant in the sense legitimately applicable to the term, but such action is brought to recover the penalty as a fixed sum by way of indemnity to the public for the injury suffered by reason of the violation of the statute. The effect is merely to charge the defendant with pecuniary liability, while a criminal prosecution is had for the purpose of punishment of the accused." Chaffee v. U. S., 18 Wall. 516, 21 L. Ed. 908, is sometimes cited to the contrary, and seems to have been relied on in S. W. 470; but, as pointed out in Hawloetz v. Kass, supra, that question does not appear to have been considered. See, also, Riker v. Hooper, 35 Vt. 457, 82 Am. Dec. 646. The weight of authority is with our conclusion that the right to recover may be established by a preponderance of the evidence. Appellant questions the constitutionality of the statute in so far as it imposes a penalty upon the corporation for an offense of the engineer. As we understand the argument, it is that the Legislature has no power to enact a statute punishing one person for an offense committed by another. Such is not the purport of this statute, however. The engineer is a mere employé or agent of the corporation. He is selected by it for this position of great responsibility in the operation of its property, and is under its directions. The statute exacts of the corporation the duty of seeing to it that such employé or agent do this in obedience to the statute, and on failure to do so inflicts a penalty, not alone for the omission of the engineer, but for its failure to compel the proper discharge of his duty. Other errors assigned will not be likely to arise on another trial.

Reversed.

NEWIS et al. v. TOPFER et al.

(Supreme Court of Iowa. Oct. 20, 1903.)

TRUSTS — DEED ABSOLUTE — FRAUD — CONFIDENTIAL RELATIONS — LIMITATIONS — PERVERSION OF TRUST FUNDS—REPUDIATION BY TRUSTEE—FOLLOWING TRUST FUNDS.

1. Code, § 2918, requiring that declarations of trust or powers in relation to real estate must be executed in the same manner as deeds of conveyance, does not prevent having a deed absolute declared a trust where the grantor believed that she was executing a devise in trust for her children, and did not fully intend, as grantee claimed, that she was making an absolute conveyance in advance on a contract that the grantee support the children after grantor's death.

2. Where grantor, while in a weak and helpless condition, made an absolute deed of her property to her stepfather, confiding in him and her minister, who aided in securing the execution of the deed, to so provide that it would operate to secure the maintenance of her children after her death, a constructive trust in the stepfather was created on account of the confidential relation, though there was no fraud intended in procuring the conveyance.

3. The title having been taken by the stepfather impressed with a trust for the children, his position was as though the trust was declared in the deed; therefore the five-years limitation provided by Code, § 3447, did not begin to run from the date of the deed against an action to have it declared a trust on account of fraud, but ran from the time the stepfather first repudiated the trust and claimed the property.

4. A decree declaring a deed absolute a trust may declare a lien therefor on property purchased by the trustee with the proceeds of a sale of the trust property.

Digitized by Google

Appeal from District Court, Polk County; C. P. Holmes, Judge.

This is an action in equity to have a deed of conveyance absolute in form declared to be a deed of trust, and for general relief. The defendants answered, denying the trust alleged, pleading the statute of limitations, and presenting a counterclaim upon which judgment is demanded in the event the trust relation alleged shall be found to exist and it is further found that the plaintiffs' action is not barred by the statute. The facts, as far as necessary to be considered, will be found stated in the opinion. There was a trial to the court, resulting in a decree in favor of the defendants dismissing the petition, and rendering judgment against plaintiffs for costs. The plaintiffs appeal. Reversed.

J. C. Hume, for appellants. E. T. Morris, for appellees.

BISHOP, C. J. It appears that on October 11, 1887, Wilhelmina Heine, a widow, was the owner in fee of a house and lot in the city of Des Moines, which is described in the petition, and the same then was, and for several years had been, occupied by herself and family as a home. On the date mentioned she signed a deed of conveyance of the same to the defendant Christian Topfer, who was her stepfather. The instrument signed purported to be an absolute conveyance and deed of general warranty. The consideration named therein is love and affection and the sum of $1 in hand paid. Mrs. Heine continued to occupy the property with her family until her death, which occurred October 18, 1887. She left surviving her four children, all minors, viz., Lena, born February, 1870; Ada, now Ada H. Newis, born October, 1872; Marie, born August, 1877; and William, born October, 1879. Lena, the eldest, died in September, 1888, unmarried. Mrs. Heine was the daughter by a former marriage, and only child of the defendant Gotlebe Topfer, now and at the time in question the wife of defendant Christian Topfer. After the death of their mother, the plaintiffs and their sister Lena were taken to the home of defendants, where they remained for the time being. In May, 1888, the defendants sold and conveyed the Heine property to one Harris, receiving therefor the sum of $750, which sum it appears was the reasonable value of the property at the time of such sale. Without entering upon a discussion of any of the controverted points of evidence, we find the facts bearing upon the execution of the deed in question to be, in substance, these: The illness which terminated in the death of Mrs. Heine had continued over a period of several years. She had gradually declined, until but a shadow of her former self remained, and for several months before her death had been bedfast. It appears that the Reverend Kleinlein, minister in charge of the church to which she belonged, was a frequent visitor at her house, and towards the last the defendants, one or both, were there most of the time. Some three or four weeks before the death of Mrs. Heine, it then having become apparent that the end was not far off, Kleinlein brought up the subject-matter of the disposition of the children and of the property. As far as shown by the record, he is the only person who talked directly with Mrs. Heine relative to the matter, although the defendants were present during some of the conversations. Mrs. Heine had grown to be very deaf, and either unable or disinclined to talk, so that she responded to what was said to her only by shaking or nodding her head. It appears without dispute that Kleinlein, in presenting the matter to her, said, in substance, that she ought to execute a will, and thus put her property in such shape that the children might have the benefit thereof. To this she responded simply by a nod. The record is barren of any evidence tending to prove that the subject of making a deed of the property, absolute in terms, to the defendants, was ever suggested to the dying woman, although the propriety of defendants taking and caring for the children was discussed in her presence. From our reading, the conclusion seems to be irresistible that Kleinlein undertook to settle all matters involving the children and the property according to his own notions. He demanded of the defendants that they take the children, to which they demurred at first, but finally consented when assured by Kleinlein that the property would be placed in their hands. About a week before the death of Mrs. Heine, Kleinlein and Christian Topfer visited a lawyer, and the subject of the disposition of the property was talked over. The lawyer advised the execution of a will, but this was objected to because thereunder the property could not be made available, and a similar objection was made to a trust deed. It was finally decided that an unconditional conveyance should be made to Topfer, in consideration of which he should take the children and care for and educate them. Accordingly, a simple deed was prepared, and the parties then repaired to the residence of Mrs. Heine. The condition of the latter at this time is described by her attending physician. He says that she was hopelessly ill, and only partially in possession of her physical senses; that when he saw her last, which was within a day or two, she had passed into a semi-comatose condition, and did not seem to recognize and comprehend her own condition or the surroundings. He also says that she was neither physically nor mentally able to attend to any business affair, or to understand the nature and effect of any contract she might make. Other witnesses also testify to her helpless and hopeless condition, and this does not seem to be the subject of any serious question, although some of the

Digitized by Google

the house, Kleinlein, without making any explanations, and without reading the document to her, as far as appears, told Mrs. Heine that he wanted her to sign the instrument they had brought, and that it was all right. She was raised up, and he put a pen in her hand, and then with his own hand guided hers, whereby her name was traced upon the face of the deed. Thereafter the deed was delivered to Christian Topfer. Now, in his testimony, Topfer does not claim that he ever conversed with Mrs. Heine upon the subject of a conveyance of the property to him. By way of a conclusion he says that Mrs. Heine and the minister promised him the property if he would care for the children. When such conversation occurred, what was said and who said it does not appear. Taken in connection with the rest of his testimony, we think it more than probable that the statement came from Kleinlein alone. Kleinlein was not a witness upon the trial, and all the other witnesses who overheard his conversations with Mrs. Heine agree that there was mentioned only the execution of a will for the benefit of the children. Without doubt, if it were to be said that the deed to Christian Topfer was understandingly and voluntarily made, and that the agreement on his part was one simply to take the children of his stepdaughter and care for and educate them, and upon their majority to deed the property to them, or turn over to them the proceeds thereof, if sold, an express trust would be made out. Counsel for appellees does not dispute this, but it is said that under our statute such express trust could be proven only by some writing wherein the trust was declared. Section 2918 of the Code, providing that "declarations of trust or powers in relation to real estate must be executed in the same manner as deeds of conveyance," is relied upon to support the contention. That the statute is to be given application to all cases coming within the scope thereof cannot be questioned. But such statute was intended to apply where parties are wholly capable of contracting, and do so contract with full understanding and knowledge, if not at arm's length. And the avowed purpose is to prevent frauds. The thought of the statute, expressed in homely language, is that, if one shall choose to place title to realty in the name of another, and shall not by the same or some contemporaneous instrument in writing reserve to himself or for the benefit of some other person any interest therein, public policy requires that he shall not be heard afterwards to assert that in point of fact the creation of a trust was thereby intended. But for such rule, the security of land titles, a subject of much public as well as private importance, and as well other interests of an express promise, or a refusal on the part of an alleged trustee to execute the trust reposed in him, however reprehensible his conduct from a moral standpoint may be, will not be sufficient to remove the bar of the statute and allow a trust in realty to be proven by parol. Burden v. Sheridan, 36 Iowa, 125, 14 Am. Rep. 505; McClain v. McClain, 57 Iowa, 167, 10 N. W. 333; Acker v. Priest, 92 Iowa, 610, 61 N. W. 235. But, as we have said, the rule was designed to prevent, and not to furnish a cover for, frauds. In connection with the rule, and, indeed, as a part of it, the same section of the statute declares, "But this provision does not apply to trusts resulting from the operation or construction of law." When, therefore, it is made to appear that fraud has entered into a transaction or agreement, whereby title to realty is procured to pass out from the owner, the rule has no application. In such a case, it being made to appear that an innocent party has been led by fraudulent practice or deception into parting with the title to his property, a constructive trust arises, and, notwithstanding the general rule, a court of equity will grant relief to the extent of enforcing a parol contract entered into at the time, and may otherwise by its decree protect and enforce the rights of the innocent party. In the application of the rule the distinction to be drawn is between those cases where fraud inheres in the very contract under and pursuant to which the conveyance in question was made and those cases which involve simply the moral fraud or wrong incident to the repudiation of such portion of a contract theretofore fairly entered into as rested in parol. In the former class of cases the fraud may be proven, and, being established, the constructive trust which arises therefrom may be said to be independent of any express agreement of trust, if such is claimed or appears, although an express agreement, being proven, may be resorted to for the purpose of defining or ascertaining the nature and character of the trust. If the law were otherwise, then it would be that its provisions could be made to serve as a shield to prevent the discovery and punishment of a fraud in fact committed. As illustrative of the point, we quote from the opinion in Burden v. Sheridan, supra: "So where one agreement in writing is proposed and drawn, and another is fraudulently and secretly brought in and executed in lieu of the former. In this and like cases where there has been some trick or artifice or misrepresentation by which a party has been induced to enter into an agreement or part with some right, and would sustain injury if the other party is allowed to repudiate the agreement, courts of equity have granted relief to the party injured." The principle involved is

Digitized by Google

not unlike that which obtains in a case where a devisee or legatee has induced a testator to make a devise or bequest to him by verbal promise to hold the property or an interest therein for the benefit of a third person. It is said that the breach of such promise is a fraud such as will operate to convert the devisee into a constructive trustee. 15 Am. & Eng. Enc. of Law (2d Ed.) 1191; Moran v. Moran, 104 Iowa, 216, 73 N. W. 617, 39 L. R. A. 204, 65 Am. St. Rep. 443. In the second class of cases to which we have referred, the parties having understandingly chosen the form in which their contract shall be evidenced, the law, for satisfactory reasons, will not permit them to assert in parol that the conveyance made was in fact subject to a trust imposed, and this notwithstanding it is alleged that bad faith now dominates the conduct of the grantee.

Now, in the case before us it is the contention of appellants—and without difficulty we are able to agree therein—that a fraud was committed upon Mrs. Heine. We need not and we do not go so far as to say that a fraud was actually intended. On the contrary, we may concede for the purposes of the case that the appellant Christian Topfer and the minister, Kleinlein, were actuated by worthy motives; nevertheless what was done amounted to a legal fraud, if the instrument executed is to be given full force according to its terms. If it were to be said that in point of fact Mrs. Heine was non compos at the time—and this is contended for by counsel for appellants—then all question as to the character of the holding by Topfer would instantly disappear as a matter of course. We would then have a case of no deed, and the appropriation of the property by him would give rise at once to a constructive trust. Granting, however, that Mrs. Heine had not as yet parted with all her mental powers, still we are satisfied that she was led to believe that a will only was to be executed by her, and that such would provide for a devise of the property to, or in trust for the benefit of, her children. There is no ground upon which to plant the assertion that it was within her understanding and intention that she was entering into a contract for the support and maintenance of her children, and paying therefor in advance by an absolute and unconditional conveyance of all the property she possessed; and that she did not know, as a matter of fact, what was the character of the instrument she signed, we think is clearly established by the evidence. Taking the circumstances of the case to be as we find them, and it follows as a necessary conclusion that Topfer is in no position to claim that the conveyance to him was voluntarily and understandingly made, or that he obtained and took title to the property in good faith. He became chargeable, therefore, as a trustee for Mrs. Heine, and upon her death as a trustee for her legal heirs.

There is another principle of law which has application to the facts here presented as we think, and upon which the conclusion we have reached can be justified. The defendant sustained a relation parental in character toward Mrs. Heine. He accepted the conveyance from her knowing that it was no part of her intention to bestow a gift or confer a benefit upon him. Within his knowledge it was the extent of her understanding that in some way the property was being made over to or for the sole benefit of her children. In her weak and helpless condition she confided in her minister and her stepfather to so provide that her desire might be fulfilled. Accordingly it is to be said that a confidential relation existed between the parties, and in such a case, even though there be no fraud on the part of a grantee in procuring a conveyance to be made to him, still equity will decree the existence of a constructive trust, and enforce the same according to the understanding of the grantor as far as such can be ascertained. As supporting this principle, see Davis v. Dunne, 46 Iowa, 684; Goldsmith v. Goldsmith, 145 N. Y. 313, 39 N. E. 1067; Brison v. Brison (Cal.) 17 Pac. 689, 7 Am. St. Rep. 189; Broder v. Conklin (Cal.) 19 Pac. 513; Gruhn v. Richardson (Ill.) 21 N. E. 18.

2. Having reached the conclusion that the acceptance of the deed to the property in question on the part of Christian Topfer had the effect to create a constructive trust, we next proceed to consider whether the right to declare upon and enforce such trust has been lost by reason of the running of the statute of limitation. It is the contention of counsel for appellees that plaintiff's action, being grounded on fraud, comes within the provisions of subdivision 6 of section 3447 of the Code, which requires all actions brought for relief on the ground of fraud to be commenced within five years. And it is said that the statute commenced to run from the instant the deception complained of was practiced on Mrs. Heine, or, at best, from the time knowledge of such deception was imparted, which was accomplished by the recording of the deed occurring on the day the same was executed. It is also said that the operation of the statute was not suspended by the death of Mrs. Heine, but continued to run as against her heirs and representatives. With this conclusion, arrived at by counsel, we cannot agree. The title to the property having been taken by Topfer impressed with a trust, and the terms thereof being ascertained, it follows that from the beginning his relation to the property and to the cestui que trust must be regarded precisely as though the terms of the trust had been declared in the deed itself. We think that it fairly appears from the evidence that from the rents of the property, or from the proceeds thereof, if necessary, the defendant was to maintain and educate the children of Mrs. Heine; that, when all the children had arrived at the age of majority,

Digitized by Google

Nothing was said or done by Christian Topfer indicating an intention to repudiate the trust until shortly before the commencement of this action, and, in any event, five years has not elapsed since said children became of age. It follows that the statute of limitations has not run, and the plea thereof is without force. As illustrative of the principle involved, see the following cases: Otto v. Schlapkahl, 57 Iowa, 226, 10 N. W. 651; Gebhard v. Sattler, 40 Iowa, 152; Murphy v. Murphy, 80 Iowa, 740, 45 N. W. 914; Long v. Valleau, 87 Iowa, 675, 55 N. W. 31, 56 N. W. 748.

3. We now inquire into the merits of the counterclaim pleaded by defendants. There are items amounting to $78.25 paid out in connection with the property in question, and, without entering upon a discussion of the items, or the evidence relating thereto, we think the same should be allowed. So, too, we think an item of $25 for funeral expenses of Lena should be allowed. The remaining items of the claim are for board, schooling, clothing, etc., of the children, and these should not be allowed. It appears that, when taken to the home of defendants, the children lived in a room by themselves; that they cared for themselves principally, doing their own cooking, washing, etc. The girls soon went out to work, and from their earnings they provided food and clothing for themselves and the younger children. True, defendants contributed to some extent to the support of the younger children, but it seems that as soon as they were old enough they went out to work, and their earnings were appropriated by defendants. On the whole, and after a careful reading of the record, we think that what was received by defendants in the way of service and earnings, together with the use of the money derived from the sale of the property in controversy, was sufficient to fully compensate defendants for all expense incurred by them. Accordingly we find that from the sum of $750 in the hands of defendant Christian Topfer there should be deducted the sum of $98.25, and plaintiffs are entitled to judgment in the sum of $651.75, with interest from the date of the decree to be entered, at the rate of 6 per cent. per annum. It is made to appear that of the moneys so received by him the said Christian Topfer invested the sum of $300 in lot 14, block 1, in White's addition to Fort Des Moines, which property said defendant still owns. Plaintiffs having traced so much of the trust fund to said property, the same may be established by the decree to be a lien thereon, with an order for sale under special execution to satisfy the same. For the remainder of the judgment ordered plaintiffs may have general execution.

Upon the trial in the court below plaintiffs expressly consented that the decree, if one was ordered in their favor, should n[illegible] the trust fund was used should be decreed to be subject to the right on the part of defendants to use and occupy the property during the remainder of their lives. A similar consent is here expressed. The decree entered will so provide.

The judgment entered by the court below is reversed, and a decree in favor of plaintiffs in harmony with this opinion is ordered. The cause will be remanded for that purpose, or plaintiffs may have decree entered in this court, at their election. Reversed.

STATE SECURITY BANK v. BURNS et al.

(Supreme Court of Iowa. Oct. 22, 1903.)

APPEAL — NEW TRIAL — SUSTAINING MOTION GENERALLY — FAILURE TO ARGUE ALL GROUNDS — EFFECT — ARGUMENT IN REPLY BRIEF.

1. Where a motion for a new trial on 17 grounds is sustained generally, appellant's failure to argue but two of the grounds necessitates an affirmance.

2. Where, in its brief, appellant has argued but 2 of 17 grounds on which a motion for a new trial was based, and sustained generally, it cannot argue the entire motion in its reply brief.

Appeal from District Court, Buena Vista County; A. D. Bailie, Judge.

Action at law for the conversion of personal property. Trial to a jury, and a verdict for the plaintiff, which was set aside and a new trial granted. The plaintiff appeals from the order. Affirmed.

A. L. Freelove and F. H. Helsell, for appellant. F. F. Faville, for appellees.

SHERWIN, J. The motion for a new trial stated 17 different grounds therefor, and was sustained generally. The appellant, in its opening argument, argues but two of the 17 grounds of the motion; and the appellees, in their argument, do not discuss the grounds relied upon by the appellant, but contend that they cannot be considered by us, under the rule announced in Boyd v. Western Union Telegraph Co. (Iowa) 90 N. W. 711. This case is clearly within the rule therein stated, and must be affirmed. The attempt to argue the entire motion in the appellant's reply is manifestly improper, and the motion to strike such parts thereof is sustained. Affirmed.

MOCK v. CHALSTROM et al.

(Supreme Court of Iowa. Oct. 19, 1903.)

QUIETING TITLE—CONVEYANCES BY MINORS—IRREGULAR PROCEEDING — CORRECTION — PROBATE JURISDICTION—COSTS.

1. Where an action is commenced against a vendor by his vendee based on an alleged defect of title arising from irregular probate proceedings, and the defect is cured and title perfected before trial, the plaintiff is not entitled to a decree for rescission of the conveyance.

Digitized by Google

2. Where, pending proceeding for rescission of a conveyance of realty pursuant to probate proceedings which are claimed to be irregular, the guardian for the minors making the conveyance applies to the probate court directing attention to the defects in the proceedings, the court may authorize conveyances to perfect the title.

3. Subsequent proceedings by the guardian in the probate court to cure defects in a former proceeding authorizing the sale of minors' realty are not affected by the fact that the clerk of the probate court had demanded of the guardian a new bond.

4. Where plaintiff, having cause for complaint, has confused an action to quiet title against a guardian of minors with an action for breach of warranty against defendant, and the pleadings are numerous, each party may be required to pay his copy and witness fees, and defendant may be taxed with all other costs down to the entry of the decree.

5. Under Code, § 4226, relating to the taxation of costs if the party bringing a suit to quiet title make demand of the holder of the adverse interest for a quitclaim deed before suit, and it is refused, no costs can be taxed against defendants on whom no notice has been served.

6. Where an action is based on covenants in a deed executed by defendant to plaintiff, no notice to defendant under Code, § 4226, relating to taxation of costs in actions to quiet title is necessary as a prerequisite to the taxation of costs against him.

7. Where a cross-bill in a suit to perfect title seeks the foreclosure of a mortgage, which, until plaintiff's title was perfected, might be denied, a decree for foreclosure may be allowed to stand without costs and attorney's fees.

Appeal from District Court, Polk County; C. P. Holmes, Judge.

The opinion states the facts. There was a decree in favor of defendants, and plaintiff appeals. Modified and affirmed.

E. D. Samson and H. G. Carpenter, for appellant. A. G. Kingsbury, for appellees.

BISHOP, C. J. From the record before us we glean the following state of facts: The property in controversy consists of a lot, with dwelling house and other improvements thereon, situated in the city of Des Moines. In June, 1885, the property was owned by Charles Chalstrom. At about the date named he died intestate, leaving surviving him the defendants Mina J. Chalstrom, his widow, and Mary J., Jennie E., August E., and Charles W. Chalstrom, his children, all being at the time minors. Isaac Brandt was appointed guardian for said minors by regular proceedings. In February, 1889, the widow, Mina J. Chalstrom, contracted to sell the property in question to the defendant W. B. Arnburg, for the gross sum of $1,400. Brandt, guardian, made application to the probate court of Polk county, having jurisdiction of the guardianship proceedings, for authority to join in the sale and conveyance, and an order was made and entered in said court authorizing and directing the sale of the interests of said minors. Conveyances proper in form were accordingly executed by said widow and by said Brandt, guardian, to Arnburg, and the latter at the time of the delivery thereof paid of the consideration agreed upon the sum of $500 in cash, and executed and delivered to Brandt, guardian, his note secured by mortgage on the property for the sum of $900, the balance of the purchase price. It appears, however, that notice of the application to sell said property was not served upon the minors, and it also appears that the deed executed by Brandt, guardian, was not presented to and approved by the court. At the time of his purchase Arnburg went into possession of the property, and continued therein until April, 1892, when he sold the property to this plaintiff, and conveyed the same by deed of general warranty. The consideration agreed to be paid by plaintiff to Arnburg was $1,500. A portion of this was paid in cash, a portion by the assumption of the mortgage given to Brandt, and for the balance a note secured by second mortgage on the property was given to Arnburg. Plaintiff went into immediate possession, and has paid the taxes and made many valuable improvements on the property. Before the commencement of this action Brandt resigned as guardian, and Mina J. Chalstrom was appointed and qualified in his stead. At the time this action was commenced Mary J. and Jennie E. Chalstrom had reached the age of majority. No controversy exists as to the foregoing state of facts, and it is also admitted that all the moneys received by the guardian have been expended for the use and benefit of his wards. It is difficult to determine from the pleadings in the action just what is the attitude and what are the demands of the respective parties, as much confusion exists therein. In his original petition plaintiff says that he has demanded of the defendant Arnburg that he make good the title to the property, but that no steps have been taken to accomplish such result. In this pleading plaintiff demands a decree establishing and confirming his title against each of the defendants, or, if this be denied, that his notes given to the guardian and Arnburg be canceled, and that he have an accounting as against Arnburg to determine the amount due him for all moneys paid, improvements made, etc., and for costs and attorney's fees. Thereafter, and on October 1, 1900, plaintiff filed an amendment to his petition, in which he apparently abandons his demand that title be quieted in him, and tenders to defendant Arnburg the possession and a reconveyance of the property, and demands judgment against said Arnburg upon an accounting to be had for all moneys paid and expended by him, less the reasonable rental value of the property. It appears, however, that to this amendment a demurrer was interposed and sustained, and no exception was taken to the ruling. On March 14, 1901, plaintiff filed what is termed an amended and substituted petition. Taken as such, and judged by the ordinary rule, we should be compelled to dismiss the plaintiff's action, inasmuch as the pleading now under consideration contains nothing in the

Digitized by Google

ray of a description of any property, nor s there to be found the allegation of an issu- .ble fact concerning the title, or want of itle, to any particular property. Evidently he court below treated this pleading, not- vithstanding the designation thereof, as a imple amendment to the original petition, .nd we shall so treat the same. Therein laintiff prays only for a rescission of his urchase of the premises in controversy, for .n accounting, and for judgment against de- endant Arnburg for all sums found due. The defendants, in their several answers, leny that demand was made upon them, or pportunity given them to perfect the title o the property in controversy before the ommencement of this action. All the other naterial allegations of fact alleged by plain- iff are admitted. By a subsequent amend- nent to their answers they allege that since he commencement of this action the two vards who have come of age and Mina J. Chalstrom, as guardian of the two minor vards, under proper authority of court, have xecuted and caused to be recorded valid leeds of all their rights and interests in the roperty in question to defendant Arnburg. The defendants Chalstrom and the defendant Arnburg, in separate cross-bills, ask foreclo- ure of the respective mortgages held by them, uch cross-bills being filed in connection with heir original answers. A reply was filed by laintiff, which will be noticed presently as ar as material to be considered. Evidently he decree entered was not drawn up by ounsel for plaintiff. Thereby it is deter- nined in terms that the conveyances pen- lente lite by the adult heirs and the guard- an of the minor heirs to the defendant Arn- urg perfected title in him, and that such nured to the benefit of plaintiff. Accord- ngly, the relief demanded by plaintiff is lenied, and his petition dismissed, at his osts. The decree then recites that on the rayer of the defendants the title to the roperty is quieted in plaintiff. The defend- nts Chalstrom were given judgment against laintiff on their cross-bill for $643.78, with nterest at 8 per cent. from December 1, .901, and for $39.30 attorney's fees and costs, nd awarded a foreclosure of the mortgage eld by them. The defendant Arnburg was iven judgment on his cross-bill against laintiff for $198.42, with interest at 7 per ent. from December 1, 1901, and for $19.84 ttorney's fees and costs and a foreclosure f his mortgage.

To say that the subsequent conveyances nade to Arnburg inured to the benefit of laintiff is to announce the application of a ule of law elementary in character, and too vell understood to require the citation of uthorities. And where an action is com- nenced against a vendor by his vendee, ased upon an alleged defect in or failure of itle, it will be sufficient to defeat the ac- ion if it is made to appear that before trial the title has been perfected. Stevenson v. Polk, 71 Iowa, 288, 32 N. W. 340. Having in mind the doctrine of the case just cited, it is clear that plaintiff was not entitled to a decree for rescission, conceding that under other circumstances such would have been an appropriate remedy. Assuming that the probate proceedings were irregular, the very defect of which plaintiff complained, and the existence of which was the occasion of his appeal to the courts, was cured, and his title perfected, before the beginning of the trial; indeed, before the filing of his amendment praying for a rescission. In no event can anything be claimed for the amendment to the petition filed October 1, 1900, as the ruling upon the demurrer took such pleading out of the case. That plaintiff was entitled to have a decree quieting his title may be very well conceded. In dismissing the petition the court below evidently acted upon the assumption that plaintiff was no longer asking for a decree quieting title. But he was praying for equitable relief generally, and the decree contains a provision quieting his title as against all the defendants. It does not occur to us that such provision is robbed of any of its force by the further statement made in the decree that the court was moved thereto by the prayer of the defendants. Of course, the court could not foist upon plaintiff any affirmative relief that he was not asking or did not desire, and he is not bound to accept of the relief decreed if he shall so determine.

But plaintiff says in his reply that the probate proceedings were ineffectual to authorize a conveyance on behalf of the interested minors, and that, accordingly, the conveyance made did not have the effect to perfect the title to the property in plaintiff. It appears that soon after this action was commenced the guardian made application to the probate court setting forth the proceedings theretofore had on the application of Brandt, guardian, and calling attention to the defects in such proceedings; also setting forth what had been done thereunder, and praying an order authorizing the present guardian to make a conveyance to perfect the title in Arnburg. Such an order was made, a conveyance executed, approved, and recorded. Counsel says that the probate court had no jurisdiction to so act; that the proceeding was in the nature of an action in equity, of which probate courts may not assume jurisdiction. With this contention we do not agree. We may well admit that an equitable consideration is involved where it appears that a probate court, finding that a former deed authorized by it has proven ineffectual to convey title because of defective proceedings, upon further application by the guardian orders a new deed to be executed to accomplish what was intended by the first deed. But that such a proceeding is in the nature of an action the subject-matter of which is cog-

Digitized by Google

PETERSON v. AMERICAN GRASS TWINE CO.

(Supreme Court of Minnesota. Oct. 30, 1903.)

INJURY TO EMPLOYE—NEGLIGENCE OF MASTER—DEFECTIVE APPLIANCES.

1. The obligation of a master to exercise reasonable care to provide his servants with reasonably safe instrumentalities with which to perform their work embraces the obligation to provide a sufficient number of servants to perform the work safely.

2. Evidence examined, and *held* sufficient to justify the verdict.

(Syllabus by the Court.)

Appeal from District Court, Hennepin County; David F. Simpson, Judge.

Action by Lars Peterson against the American Grass Twine Company. Judgment for plaintiff. From an order denying an alternative motion for judgment notwithstanding the verdict, or for a new trial, defendant appeals. Affirmed.

T. A. Garrity, for appellant. Gjertsen, Rand & Lund, for respondent.

BROWN, J. Action to recover damages for personal injuries alleged to have been caused by the negligence of defendant. Plaintiff had a verdict in the court below for $400, and defendant appealed from an order denying its alternative motion for judgment notwithstanding the verdict, or for a new trial.

The facts are as follows: Plaintiff was employed by defendant, a corporation, as a common laborer or "handy man," being assigned to no particular line of employment, but doing such work about defendant's factory as he was directed to do from time to time by its superintendent. About the time complained of, defendant had purchased and intended to install in one of its departments some molding presses. They had been delivered at the factory, and the superintendent in charge of the department had set them up, preparatory to their being moved into the factory and placed in proper position. The presses weighed 365 pounds each, and were so constructed that, when standing detached from the floor, they were unstable and easily tipped over. A large, heavy weight, attached to the top of the press, served as a balance, and, if removed, the machine would topple over, and not stand erect. After the presses had been set up, the foreman directed plaintiff to move them to their position in the factory, and attach them to the floor. Plaintiff complied with the order, and on the day previous to the one in question successfully moved one of the presses to its position, but found the work difficult, owing to the form and shape of the press, and its weight. On the following day, in further compliance with his orders, he attempted to move another press to its place. Finding the work somewhat difficult, he removed the heavy weight attached to the top, and the press immediately fell over upon him, injuring very severely his ankle and foot. He brought this action to recover damages, alleging in his complaint two grounds of negligence: (1) That defendant was negligent in ordering plaintiff to move the presses without assigning other servants to assist him; and (2) in not explaining to him the risks and dangers incident to handling and moving the presses, and particularly in not informing and instructing him that the removal of the weight at the top of the press would cause it to fall over. The general verdict for plaintiff is in effect a finding of negligence on the part of defendant in both respects, and the question presented to this court is whether the verdict is sustained by the evidence.

A master is under legal obligation to exercise reasonable care to provide his servants with reasonably safe instrumentalities and appliances with which to perform their work, and, where the work is attended with peculiar conditions, not known to the servant, increasing the risks and hazards to the employment, to warn and instruct the servant concerning the same. The duty to provide reasonably safe instrumentalities embraces the obligation to provide a sufficient number of servants to perform the work safely. Woods, Master & Servant, § 394; Craig v. Ry. Co., 54 Mo. App. 523; Johnson v. Ashland Water Co., 71 Wis. 553, 37 N. W. 823, 5 Am. St. Rep. 243. Proper and sufficient help and assistance are as essential in the performance of the servant's duty, when not safely performed alone, as safe instrumentalities, and the law enjoins upon the master the duty of providing it. We are cited to no case in this court covering this particular feature of the law of negligence, but the general principles applicable to such questions have been elaborated in various cases, and fully sustain the view just stated, and the cases cited in support of it. The rule applies to the case at bar, and covers the first alleged ground of negligence, viz., that defendant was negligent in not providing plaintiff with other servants to assist him in moving the presses to their position in the factory.

As to the second ground of negligence, that it was the absolute duty of defendant to inform and instruct plaintiff of the dangers incident to the work he was ordered to do, the principles of law applicable thereto are clearly stated in Gray v. Commutator Co., 85 Minn. 463, 89 N. W. 322. It was there correctly said that if there are peculiar conditions, increasing the risks and hazards of using the instrumentalities furnished, likely to arise or occur in the performance of the servant's duties, the master is under obligation to give the servant warning and information concerning the same, and this without reference to his age or other experience that has acquainted him with the d-

¶ 1. See Master and Servant, vol. 34, Cent. Dig. § 23.

Digitized by Google

gers he incurs. The age, knowledge, and experience of the servant are of importance in such cases only as evidence to be weighed by the jury in connection with the other circumstances of the case tending to show his knowledge and appreciation of the dangers of his employment. The facts in that case are not precisely like those in the case at bar, but they are similar in their general aspects, and the principles there laid down are in harmony with the general rule, supported by all the authorities, that, where a master has superior knowledge of the nature and character of the servant's work, the obligation arises on his part seasonably to acquaint the servant with the dangers and hazards connected therewith which are unknown to the servant, or could not be discovered by him by the exercise of ordinary prudence. Of course, the servant assumes such risks as are obvious and apparent, and, if he undertakes the performance of his duties with obviously defective tools and instrumentalities, knowing and appreciating the dangers incident thereto, he cannot recover. In the case at bar the evidence is sufficient to justify the jury in finding that the presses in question were very heavy, not easily moved by one person, likely to tip over if not attached to the floor, unless handled with considerable care; that they would not stand alone at all when the heavy weight at the top was removed; that plaintiff was unacquainted with their construction, unfamiliar with and did not appreciate the dangers and risks incident to moving them without assistance, and especially the danger to result from removing the weight. It appears without serious controversy that defendant's foreman in charge of this particular department of its factory was familiar with the construction of the presses, their weight, and that they were liable to tip over if not handled with care. He had full charge and direction of this particular work, and control over its performance. He did not assist in the work, but had authority to direct plaintiff to do it, and represented defendant in doing so. Within the rules of law we have already adverted to, it was defendant's absolute duty, under the circumstances, to provide plaintiff with assistance in removing the presses, and to acquaint him with the dangers incident to the work, and this obligation it could not avoid. Its failure to perform it renders it liable in this action. A careful examination of the evidence satisfies us that the jury was justified in finding a necessity for the observance of the rule stated on the part of defendant, and a neglect to perform it.

But it is urged that defendant's foreman, who ordered plaintiff to move the presses into the factory, was a fellow servant, for whose negligence defendant is not responsible. We do not concur in this contention. The rule as to when an employé of the master acts in the capacity of a vice principal has been discussed in many cases before this court. In Perras v. Booth & Co., 82 Minn. 191, 84 N. W. 739, 85 N. W. 179, it was said that an employé or servant who is clothed with special powers and authority with respect to the management of the master's business, and the control of the other servants in the matter of the performance of their duties, and to whom is delegated the performance of the master's absolute duty to the other servants in respect to the obligation to provide them with safe instrumentalities and a safe place in which to work, is, as to such other servants and employés, a vice principal when engaged in the performance of the special powers and authority conferred upon him, and a fellow servant when engaged in the common employment of the master. Carlson v. Tel. Co., 63 Minn. 428, 65 N. W. 914; Hess v. Adamant Mfg. Co., 66 Minn. 79, 68 N. W. 774; Vogt v. Hornstain, 81 Minn. 174, 83 N. W. 533; Krundick v. Ry. Co. (Minn.) 95 N. W. 1122. There can be no serious question that in the case at bar the foreman who ordered plaintiff to move the presses was a vice principal, within these authorities; and defendant is responsible for his failure to perform its absolute duty in the respects stated, viz., to provide plaintiff with assistance to move the presses safely into the factory, and to warn and instruct him of the dangers and hazards incident to the work.

Other errors are assigned by appellant. We have examined them with care, and find no reversible error in the record. The exceptions to the charge of the learned trial court are not well founded. Taken as a whole, the charge was clear, fair, and a full statement of all the issues in the case, and is not open to criticism. Upon the whole record, we are satisfied that the verdict was right, and should be sustained.

Order affirmed.

FOWLER v. JENKS et al.

(Supreme Court of Minnesota. Oct 23, 1903.)

SERVICE—NONRESIDENCE—PUBLICATION—PERSONAL PROPERTY—APPEAL—JURISDICTION.

1. An affidavit for service by publication under Gen. St. 1894, § 5204, reciting that the subject of the action was personal property in this state, and that the defendants claim some interest therein, was sustained by a showing that there were involved shares of stock in a domestic corporation, represented by certificates, which had been surrendered to the corporation by defendants to be exchanged for certificates in a foreign corporation.

2. Where nonresident defendants took part in the trial merely for the purpose of litigating the question as to whether the court had acquired jurisdiction by the service, they had no standing on appeal to attack the validity of the judgment in any other respect.

On rehearing. Former opinion (95 N. W. 887) modified.

LEWIS, J. In the former opinion the court fell into the error of assuming that the cause

Digitized by Google

eved from the burden of proof in supporting ıe allegations of the complaint. Upon rergument that question has been cleared up y the admissions of both parties. There 'as no appearance by the nonresident deendants, except specially to test the queson of the jurisdiction, and their appeal to ıis court raises no other question. If the 'ial court was correct in holding that jurisiction was acquired as to such defendants, ıen under the pleadings they have no standıg in this court to test the validity of the ıdgment appealed from; hence what was ıid in the former opinion concerning the urden of proof of such defendants was not ithin the issues of the case, and is withrawn. In the former decision it was held ıat service by publication was sufficient, but ecause it was assumed that the case proeded to trial upon the merits notwithstandg there was no answer, that branch of the ıse was not discussed. Service was obtainl against the nonresidents by publicatior ıder the fifth subdivision of section 5204 en. St. 1894, and the affidavit recited that e subject of the action was personal prop ty in this state, and that the defendants ıimed some interest therein, etc. At the ıte of the execution of the affidavit, certifites representing all of the shares of stock, cept 20,000 held by the nonresident dendants, had been surrendered to the Nickel ompany to be exchanged for certificates in e New Jersey Company, and before the trial the court below all of such stock had been rrendered for such purpose. The Nickel mpany was a Minnesota corporation, with office and place of business in the state of nnesota. The property interests in the corration consisted of the shares of stock, and certificates were merely evidence of the nership of such interests. Shares of stock property, and are subject to seizure by athment or upon execution under the provins of our statutes (section 5293). Jellenik Huron Copper Mining Company, 177 U. S. 20 Sup. Ct. 559, 44 L. Ed. 647. The fact t the certificates had been surrendered to exchanged for others in the New Jersey npany did not change the nature of the perty interest. The actual transfer had been completed, and the Minnesota corpoion was still in existence.

The finding of the court to the effect that subject of the action is personal property ıated in the state, and that the relief asked consists in excluding the defendants from interest therein, and the court had juristion of the subject of the action, is susıed by the evidence. The nonresident dedants took part in the trial merely for the pose of litigating that particular question. follows that they have no standing on this ıeal to attack the validity of the judgment any other respect. In going to trial upon one issue of jurisdiction, they surrendered this reason the judgment appealed from is affirmed as to defendant Chaffee, who made no appearance; and upon the appeal of defendants Lewis H. Eldridge, Samuel Kerr, Emma B. Fennimore, William J. Fraser, and L. Morgan the judgment is affirmed; and upon the appeal of the defendant the American Iron & Nickel Company the judgment is affirmed as to 343,417 shares, evidenced by the following certificates, viz.: Nos. 1,532, 1,533, 1,534, 1,535, and 1,536, in the name of Fred F. Chaffee; No. 1,537, in the name of Samuel Kerr; No. 1,538, in the name of L. Morgan; No. 1,541, in the name of William L. Fraser; No. 1,542, in the name of Emma B. Fennimore; Nos. 1,449, 1,450, 1,468, and 1,486, in the name of Lewis H. Eldridge; and No. 192, in the name of George W. Jenks—and as to the remaining 75,000 shares, not represented by certificates, judgment is reversed, and new trial ordered.

MARTIN COUNTY BANK v. BIRD
(COULTHARD et al., Interveners).

(Supreme Court of Minnesota. Oct. 23, 1903.)

REPLEVIN—ALTERNATIVE JUDGMENT—INTEREST.

1. Alternative judgment entered in a replevin action pursuant to section 5420, Gen. St. 1894, for the value of property in case possession is not obtained, is a money judgment; and the clerk of court is authorized, when entering such judgment, to add interest to the amount from the date of the order for judgment, although no specific mention is made in such order for interest.

(Syllabus by the Court.)

Appeal from District Court, Martin County; James H. Quinn, Judge.

Action by the Martin County Bank against William Bird, administrator of D. W. Coulthard. Mary L. Coulthard and others intervene. Judgment for defendant. From an order refusing to modify the judgment, plaintiff appeals. Affirmed.

H. H. Dunn, Albert R. Allen, and De Forest Ward, for appellant. Andrew C. Dunn, for respondent.

LEWIS, J. Replevin action, commenced in the district court, to recover possession of certain personal property. In its decision, of date March 31, 1899, the court ordered judgment in favor of defendant for possession of a part of the property. The order was in the usual form, and to the effect that defendant was entitled to possession of the property, and entitled to judgment against plaintiff to recover such possession, and that he have a return of the property, and that, in case such return could not be had, the defendant recover judgment against plaintiff for the value of the property, which was found to be $352.-

¶ 1. See Interest, vol. 29 Cent. Dig. § 47.

Digitized by Google

04. On April 27, 1903, on motion of the attorney for defendant, judgment was entered pursuant to the order for judgment. The clerk of court, however, in computing the amount of the judgment in case the property should not be returned, added interest, making a total money judgment of $440.33. Immediately after such judgment was entered, plaintiff moved for an order modifying the judgment by striking out the interest. The case comes to this court on appeal from an order overruling the motion.

The proceedings in the lower court were conducted in accordance with the provisions of Gen. St. 1894, § 5420. Plaintiff was in possession of that portion of the property found by the court to belong to defendant. The statute provides that the party entitled to the property shall have it restored to him, but if it is in possession of the opposing litigant, and for any reason cannot be restored, then judgment may be entered for the amount of its value, and for damages for the retention thereof. This judgment for the value is a money judgment, to all intents and purposes, but becomes such only at the option of the party in actual possession of the property. He may avoid such judgment by a return of the property in accordance with the judgment, or, if he has placed himself in a position where he cannot return the property, or elects to retain it, then the money judgment becomes operative to the same effect as any other money judgment. This being true, section 5504, Gen. St. 1894, is applicable, and the clerk was authorized to add interest to the amount determined by the court from the date of the order. It was not necessary for the order for judgment to specify that such interest should be computed.

Order affirmed.

KAISER v. CAMPBELL et al.

(Supreme Court of Minnesota. Oct. 30, 1903.)

CONSTITUTIONAL LAW—SPECIAL ACT—VILLAGES—ISSUE OF BONDS.

1. Laws 1903, p. 659, c. 364, authorizing villages to issue bonds under certain circumstances, is not repugnant to sections 33 and 34, art. 4, of the state Constitution.

(Syllabus by the Court.)

Appeal from District Court, Polk County; William Watts, Judge.

Action by Albert Kaiser against James E. Campbell and others. From an order sustaining a demurrer to the complaint, plaintiff appeals. Affirmed.

B. S. Bennett, for appellant. J. A. Hendricks, for respondents.

COLLINS, J. This is an action brought by the plaintiff, a taxpayer in the village of Fosston, against the village and the individuals composing its council, to restrain and prohibit them from issuing and selling the bonds of the village provided for by Laws 1903, p. 659, c. 364, in the sum of $4,000. It stands conceded that all of the requirements of the act have been complied with, and that all preliminary proceedings have been regularly taken. The action is based wholly upon the claim that the act under which the defendants are proceeding is special legislation, and contrary to sections 33 and 34 of article 4 of the state Constitution. The defendants demurred to the complaint upon the ground that it failed to state facts sufficient to constitute a cause of action, and from an order of the district court sustaining the demurrer plaintiff appeals.

This order will have to be affirmed, on the authority of Alexander v. City of Duluth, 77 Minn. 445, 80 N. W. 623. The act in question provides "that any village in the state whose indebtedness at the time of the passage and approval of this act exceeds the sum of $3,000, besides its bonded indebtedness, may issue its bonds for an amount as nearly as may be equal to the amount of such indebtedness," etc. A mere reading of the act shows that it is a complete and independent law, and that the basis of classification adopted therein is an existing condition, namely, villages each with an indebtedness, at the time of its passage and approval, exceeding the sum of $3,000, exclusive of all bonded indebtedness, and that the purposes of the enactment are only temporary and remedial. As was said in the Alexander Case, the purpose was to enable any municipality within the specified class to fund its floating indebtedness, thereby reducing the interest; also to relieve itself of the embarrassment of a past-due debt which it is unable to pay. The office of this law was not to authorize or to encourage the practice of contracting debts with nothing to pay them, or a repetition of the offense. And again, the existing conditions made the basis of classification in this act are of such a character as fairly to suggest the propriety of different legislation as to the villages classified, and it applies to every village of its prescribed class which desires to avail itself of the provisions thereof. It is a general law, because it operates alike upon all of the inhabitants of all the villages or other subjects of the class, included therein. That for the purposes of legislation it may be necessary, and that the Legislature may make such a classification, is undoubted. The distinction between this case and Heland v. County Commissioners (Minn.) 95 N. W. 305, is plainly apparent, for the act there considered is entirely different from that now before us.

Order affirmed.

Digitized by Google

et al.

Supreme Court of Minnesota. Oct. 30, 1903.)

NDEMNITY INSURANCE — CONSTRUCTION OF BOND—DEFAULT OF AGENT.

1. Language found in a surety bond given to n insurance company by its agent construed. *Held* to contain, among other obligations, an unquivocal promise to indemnify the obligee comany for all loss arising out of any indebtedness then due and owing by the agent.

2. *Held*, further, that as to an indebtedness ccruing subsequent to the execution and delivry of the bond, a case was made for a jury uner the rules laid down in Manchester Co. v. tedfield, 71 N. W. 709, 69 Minn. 10. And also hat, when passing upon the question of the bligee's good faith, the fact that the agent was elinquent when the bond was executed might e considered.

(Syllabus by the Court.)

Appeal from District Court, Wright County; A. E. Giddings, Judge.

Action by the Union Central Life Insurnce Company against H. G. F. Prigge and thers. Verdict for plaintiff. From an order lenying a new trial, defendant Greenhagen ppeals. Reversed.

F. E. Latham and J. C. Tarbox, for appelant. C. P. Barker, for respondent.

COLLINS, J. This action was brought gainst defendants, Prigge, as principal, and Greenhagen, as surety, upon a bond executed nd delivered by them to the plaintiff, an inurance company. This bond was conditiond that if Prigge, as the company's agent or procuring applications for life insurance, hould "pay or hand over all moneys belongng to said company which shall at any time e received by him, or for which he shall be iable, * * * including all moneys so reeived prior to the date of this instrument if any such there be) as well as that reeived thereafter, as also all moneys which e now owes or may hereafter owe said ompany, either on account of the advances o him or otherwise, and shall faithfully dischange the duties as said agent," then this bligation shall be void. Judgment was denanded as against both defendants for the ull amount of the penalty of the bond, which vas $500. At the trial below the court orlered a verdict in favor of the plaintiff gainst both defendants for the sum of 487.80. This appeal is from an order denyng a new trial to defendant Greenhagen.

It appears from the record that the defendnt Prigge entered into the employ of the laintiff company as its agent some six nonths before the bond, which bore date une 29, 1900, was executed and delivered. This employment was under a contract which rescribed his duties and provided for a bond or faithful performance thereof on his part. But no bond was given until the one in quesion, some six months after he commenced vork. Another similar contract was entered nto simultaneous with the bond. It was lleged in the complaint that during this pe- a certain amount of money, and of this, deducting his commissions, the sum of $143.04 belonged to plaintiff, and had not been paid over, and this stood admitted by the answer. On the pleadings, therefore, there was no dispute between the parties as to the sum of money due and owing from Prigge to the plaintiff at the time the bond was executed. It was further alleged in the complaint that subsequently, and after the bond was executed, and while Prigge was in plaintiff's employ about one year, he received various sums of money from policy applicants, and of these sums he held and retained the sum of $358.91 of the plaintiff's money, and which should have been paid over to it. This allegation was put in issue by the answer, and it was averred that defendant Greenhagen did not know, when entering into the bond, that Prigge was then, or ever had been, in plaintiff's employ, or that he was indebted to it; and, further, that plaintiff wrongfully and fraudulently concealed the fact from him. We may say at the outset that, in so far as future faithfulness and discharge of duty was involved, no real distinction can be made between the condition in this bond and those considered in Traders' Insurance Co. v. Herber, 67 Minn. 106, 69 N. W. 701, and Capital Insurance Co. v. Watson, 76 Minn. 387, 79 N. W. 601, 77 Am. St. Rep. 657. They are practically the same.

1. It is contended by counsel for the appellant that the court erred in receiving in evidence the entries found in the account books of plaintiff, the same being made up, it is alleged, wholly from admissions or memoranda furnished by Prigge when sending in applications for insurance, the precise point being that these entries are not competent evidence against Greenhagen, the surety upon the bond. As before stated, it stood admitted upon the trial that the principal upon the bond was in default to the plaintiff in the sum of $143.04 at the time the bond was executed. If the then existing default of the principal was absolutely secured by the bond, there can be no dispute whatever that plaintiff was entitled to recover the sum due, because there was no issue of fact made by the pleadings as to Prigge's indebtedness. It was therefore immaterial that incompetent evidence was introduced tending to establish a conceded claim. The books of account were kept by the plaintiff in the usual course of business, and the foundation for the introduction of some of the entries therein appearing both in favor of and against Prigge, as to transactions subsequent to June 29th, was sufficiently laid in accordance with the provisions of Gen. St. 1894, § 5738. But it appeared from the testimony of the lady bookkeeper that many items contained in the Prigge account were charged by her against him solely because of certain memoranda furnished by him in the applications for insurance, which he sent in from time to time,

Digitized by Google

each of these applications showing whether the first premium had been paid in cash by the person seeking insurance, or a note had been taken. If, according to Prigge's report or memoranda, the amount of the first premium had been paid to him in cash, his account was charged with the amount reported as received, and credited with the amount of his commissions, one-half of the premium. As we understand from the books and the testimony, no debits or credits were entered upon the account, in case notes were received by Prigge from the applicants for policies, until the money was actually received on the notes. It also appears from the books that advances were made to Prigge on account of commissions claimed to have been earned, but uncollected, the amounts thereof being charged on his account. Except as to certain advances charged in the account, the bookkeeper had no personal knowledge of the correctness of the charges, or that the entries were just or true. The question therefore arises as to the sufficiency of these entries in the books of account to establish that part of the directed verdict in excess of $143.04. It is well settled in this jurisdiction that under the provisions of section 5738, supra, a party to a cause may produce at the trial his account books, and upon laying the foundation therein provided for, may introduce the books in evidence, and they then become prima facie evidence as against third parties of the charges therein contained. The application of this statute is not expressly or by fair implication limited to cases where the charges so made and the accounts so kept are between both parties, or between all parties to the action. Coleman v. Lumbermen's Ass'n, 77 Minn. 31, 79 N. W. 588, and cases cited. Therefore, in so far as the items in the account books were properly charged, the books were prima facie evidence of the agent's indebtedness to the company. Certainly some of the items, especially those in reference to money advanced, were properly shown through the introduction of the books; but as to other items, which were charged by the bookkeeper solely upon statements made in the applications, they were not properly received in evidence. All that the bookkeeper knew was what she had gathered from the applications, and, while the applications themselves might have been received as admissions made by Prigge, entries in the account books were not the best evidence; in fact, were hearsay, and were not and could not have been made in conformity with the statute. Hall v. Fidelity Co., 77 Minn. 24, 79 N. W. 590, is relied upon by plaintiff's counsel as sustaining the court below. But from an examination of that case it appears from the testimony that the delinquent himself examined his account in plaintiff's books, and admitted it to be correct. With this proof it was proper, the court held, to introduce the books in evidence. See, also, note to Hall v. Chambersburg Woolen Co., 52 L. R. A. 689. But there was no such testimony here, and to the extent indicated the books were improperly received.

2. Was it the duty of plaintiff company, obligee in the bond, to disclose to the defendant surety, at the time it was executed, that the principal therein was already in default, and was it its duty to subsequently and promptly disclose the fact that the default not only continued, but that the indebtedness was steadily increasing from month to month? The condition of the bond, as to indebtedness on account of moneys received prior to its date and in Prigge's hands at that time, was plain and unambiguous. The obligation expressly referred to moneys received by Prigge prior to its date, and again to all moneys which he then owed on account of advances or otherwise. If there had been no further or other condition in the bond than this, defendant's counsel would never have suggested that the fact that an indebtedness then existed was a defense in behalf of a surety. The fact that there was another and further condition in respect to money which might thereafter come into Prigge's hands as agent, and be retained by him, can have no effect upon the condition as to indebtedness which then existed, except as hereafter noticed. The promise to indemnify in case of present indebtedness was unequivocal, and the wording of this branch of the condition was notice to the surety sufficient to put him upon inquiry. It was his duty to then learn whether any money had been received by Prigge which had been improperly retained by him. As to the money then due, the surety cannot escape liability upon the ground that plaintiff was guilty of bad faith or fraud. But a different view must be taken in respect to the money subsequently collected and retained by Prigge and as to such sums as were advanced after June 29th. It appears from the record that in no one instance did he pay over to plaintiff any part of the various sums of money collected. From the time of the commencement of his employment down to the time he ceased work for the plaintiff—1½ years—he appropriated, in violation of his contract, and with the plaintiff's knowledge, all moneys collected from proposed policy holders, so that for more than a year after this bond was executed his indebtedness to plaintiff steadily increased every month, all of which the plaintiff had full notice, and of which the surety was ignorant. It has been held that, when the facts and circumstances are cogently suggestive of the probable dishonesty of a servant, a failure to investigate the matter is negligence, which may amount to bad faith and fraud towards a surety upon the servant's bond; and also "that the cardinal rule of duty which the master or employer owes to the sureties of his servant is entire good faith. If he discovers acts of dishonesty on the part of his servant, and afterwards continues him in his service, without notice to the sureties, he is guilty of bad faith or

Digitized by Google

fraud towards them, and they will be discharged from liability for future defaults of their principal." Manchester Co. v. Redfield, 69 Minn. 10, 71 N. W. 709. Attention should here be called to the rule therein laid down as to the duty of the master in respect to mere breaches of contract obligations by the servant.

The court erred in directing a verdict for the plaintiff in any sum in excess of $143.04, and also erred in refusing to submit to the jury the question of the plaintiff's good faith in respect to the collections made after the execution of the bond. And in passing upon this question of good faith the fact of the prior delinquency may be considered.

Order reversed, and new trial granted.

NATIONAL LIFE & TRUST CO. v. GIFFORD.

(Supreme Court of Minnesota. Oct. 30, 1903.)

ACTION ON NOTE—EVIDENCE—FOREIGN CORPORATIONS—RIGHT OF ACTION.

1. In an action upon a promissory note made payable to the order of a third party, allegations that the payee has indorsed said note, and that the plaintiff is now the owner and holder thereof, do not sufficiently show title in the plaintiff.

2. Where a simple allegation in the complaint is that the plaintiff is a corporation duly organized and created under the laws of another state, Laws 1899, p. 68, c. 69, has no application, and it is unnecessary to allege a compliance therewith.

(Syllabus by the Court.)

Appeal from Municipal Court of Minneapolis; H. D. Dickinson, Judge.

Action by the National Life & Trust Company against William E. Gifford. From an order overruling a general demurrer to the complaint, defendant appeals. Reversed.

Trafford N. Jayne, for appellant. Smith & Wilson, for respondent.

COLLINS, J. The court below overruled a general demurrer to the complaint in an action brought upon a promissory note executed and delivered by defendant, and made payable to the order of Mooney & Squyer. The plaintiff, a foreign corporation, failed to allege title to the note, unless the allegations in the complaint that "Mooney & Squyer indorsed the same without recourse," and that plaintiff "is the owner and holder thereof," were sufficient for that purpose. The drafting of a complaint in an action upon a promissory note is an exceedingly simple thing to do, and it is surprising that an insufficient pleading of this character can be presented. But it has been done in this case, and the order appealed from must be reversed. In Topping v. Clay, 62 Minn. 3, 63 N. W. 1038, the note there considered was made payable to the order of a third party, and it was merely alleged that the plaintiff "is now the owner and holder thereof." It was held that this was not a sufficient allegation of title in the plaintiff. As was said, the plaintiff, in describing the note sued upon, necessarily showed title in the payee, but he failed in any way to connect himself with that title by any allegation of indorsement, assignment, or delivery. The same defect is apparent here. The only difference in the complaints in question is that in this there is the additional allegation that "Mooney & Squyer indorsed" the paper. It is not thereby alleged that the indorsement was in blank, which possibly might be a sufficient pleading, although this is not free from doubt, and we cannot infer from what is stated that it was a blank indorsement. The allegation in question might be strictly true if Mooney & Squyer had by their indorsement made the note payable to a total stranger to this action, and thus vested the actual title in him. If so, it is apparent that plaintiff has not connected itself with the ownership in any manner. Having shown by its pleadings that title to the note is in Mooney & Squyer as payee, the plaintiff should have alleged an indorsement or assignment to it by such payee, or have stated other facts which would have shown its ownership.

It is also urged that the complaint is demurrable because it failed to allege that plaintiff, a foreign corporation, as before stated, had complied with the provisions of Laws 1899, p. 68, c. 69. That chapter was construed in Brewing Co. v. Peimeisl, 85 Minn. 121, 88 N. W. 441, and has been under consideration once or twice since. By its terms it is applicable to all foreign corporations organized for pecuniary profit which were established and doing business in the state at the time it went into effect, July 1, 1899, and to such corporations as thereafter proposed or attempted to transact business in this state. But so far as appears from the complaint, the plaintiff is not engaged in business in this state, and never has been. The allegation is simply that the plaintiff is a corporation duly organized and created under the laws of the state of Iowa. It does not even appear that the alleged cause of action grew out of any business transacted in this state at any time. The act does not apply to a corporation which has not transacted business in this state, and does not intend to, or to a corporation that is simply attempting to collect in our courts the obligation of one of our citizens. The constitutional right of such a corporation to sue in our courts without complying with the terms of chapter 69 is plain. Again, it is beyond doubt that the somewhat onerous provisions of section 3 were never intended to apply to foreign corporations whose only business here was to enforce the collection of claims against residents of this state.

For the reasons stated in the concluding paragraphs of Topping v. Clay, supra, which exist here also, no statutory costs will be allowed the prevailing party. Order reversed.

¶ 2. See Corporations, vol. 12, Cent. Dig. § 2647.

Digitized by Google

BRAAFLAT v. MINNEAPOLIS & NORTHERN ELEVATOR CO.

(Supreme Court of Minnesota. Oct. 30, 1903.)

INJURY TO EMPLOYÉ—CONTRIBUTORY NEGLIGENCE.

1. *Held*, in a personal injury action brought by an administratrix, that from the testimony it conclusively appeared that the deceased was guilty of gross contributory negligence, which would preclude a recovery.

(Syllabus by the Court.)

Appeal from District Court, Clay County; L. L. Baxter, Judge.

Action by Everine Braaflat, administratrix of Nels Braaflat, against the Minneapolis & Northern Elevator Company. Verdict for defendant. From an order denying a new trial, plaintiff appeals. Affirmed.

H. Steenerson and Chas. Loring, for appellant. John W. Mason, for respondent.

COLLINS, J. Action by an administratrix to recover for injuries received by her husband while in defendant's employ, which resulted in his death. The deceased had had some eight years' experience in and about grain elevators constructed similar to the one in which he was injured, and for three years before the accident he had been the manager and in charge of this particular structure, which was of small size and capacity. A bare statement of the facts seems to be all that is necessary in order to sustain the ruling of the court below, whereby a verdict was ordered for the defendant. The office, which was also the engine room —a small gasoline engine being used therein —was on what was called the "working floor" of this building. Grain was received from wagons on the outside into a hopper, and from thence it ran down into the bottom of a pit. It was then carried upward to the working floor by means of cups attached to a belt which ran through what is termed a "boot." At the lower end of the boot the belt turned on a pulley attached to and set in motion by a shaft. One end of this shaft extended into the pit some 16 inches beyond its bearings, and on this end, close to the bearings, was a collar fastened with a setscrew to keep the shaft in place. The setscrew protruded from one-half to three-quarters of an inch above the collar, and it was five-eighths of an inch in diameter. The pit was something over 8 feet long, 5 feet wide, and about 3 or 4 feet deep. When the cup belt was in operation the grain would frequently accumulate at the bottom of this pit, and then clog up and stop the moving belt so that the grain had to be cleaned away and the motion regulated, usually several times each day. The method of doing this seems to have been for the deceased, or one of his subordinates, to get over into the pit, where he would have to occupy a space not more than 24 inches square, on one side or the other of the shaft. To put the cups in motion, he would then have to stoop in this limited space and push away the clogged grain by reaching around and under the shaft. The danger in attempting this with the shaft in motion, running, as it usually did, 50 revolutions to the minute, seems to be perfectly apparent; and it is almost incredible that a man possessed of ordinary intelligence would either undertake to get into the pit, or to move the grain while the shaft was in motion. Two methods had been provided for stopping the machinery, both available from the office: First, by throwing a switch which would immediately stop the engine; and, second, by moving a lever which instantly shifted the belt from a fixed to a loose pulley, both being located on the shaft. On the day of the accident the grain became clogged in the pit, and deceased went to the lower floor for the purpose of setting the cup belt in motion. The shaft was revolving at the speed before mentioned, and, without stopping it, he got over into the pit and stooped to clean away the grain. His clothing was immediately caught, and he was whirled violently around the shaft, and so badly injured that he died within a few hours.

Counsel for defendant insists that if the clothing of the deceased was caught upon the shaft, and not by the setscrew, no recovery could be had, because he well knew and assumed a very obvious risk when he stepped into the pit, in close proximity to the shaft, the motion of which he made no effort to stop, and also insists that there was no testimony tending to show that the clothing was caught by the setscrew, and therefore defendant's negligence cannot be predicated upon its failure to cover the head of this screw. We need not discuss either question. As to everybody except an employé who might get into the very small space we have mentioned, this setscrew and the shaft were covered and protected, so that the statute was fully complied with as to them. With easy means provided for shutting off the motion, no one would anticipate an attempt to relieve the belt cup while the shaft was revolving. When the deceased, a man of skill, experience, and intelligence, went into the pit without stopping the machinery, and in absolute disregard of his personal safety, he was guilty of contributory negligence of the rankest kind, which forbids a recovery by the plaintiff.

Counsel makes some claim that there was testimony tending to show that this method of cleaning out the pit was customary in this and other elevators. It may have been customary, but it was culpable negligence, and custom will not excuse the performance of any act negligent in itself. Larson v. Ring, 43 Minn. 88, 44 N. W. 1078. See, also, Wherry v. Railway Co., 64 Minn. 415, 67 N. W. 223.

Order of the court below affirmed.

Digitized by Google

CITY OF SUPERIOR v. HUNTER.

(Supreme Court of Wisconsin. Oct. 20, 1903.)

TAXATION—SCHOOL PURPOSES—TOWNS—LEVY BY COUNTY BOARD.

1. Under Rev. St. 1898, § 4971, providing that the word "town" may be construed to include cities or districts, unless such construction be repugnant to an act specially relating to the same, the word "town," in section 1074, authorizing the county board to determine the amount to be raised by tax in each town for the support of the common schools therein, means taxing district, whether town, city, or village; such construction not causing repugnancy, but being necessary for harmony, when all the provisions of law on the subject are considered.

2. The county board having no authority to levy school taxes for the use of the county, but only for the use of the taxing district, misdescription of it in the warrant as a county school tax will not affect the nature of the tax.

3. A resolution of a county board levying taxes on the taxable property of the county, the taxes to be apportioned between its various taxing districts, and also containing a direction as to each such taxing district, to raise a specified sum for school purposes therein, the amount of the county tax to be apportioned to each district, and the amount of school taxes directed to be raised therein to be certified to the clerk thereof, and placed in the tax roll for collection, is a levy of taxes as to the school tax as well as the county tax; Rev. St. 1898, §§ 1074, 1076, 1079, leaving nothing further to be done except the performance of purely ministerial duties.

4. The tax which under Rev. St. 1898, § 1074, the county board directs to be raised in each taxing district for school purposes therein, is not to be paid to the county treasurer, though section 1076 directs it to be charged to the district, as appears from sections 1080, 1081, and 1116, relative to the bond to be given by the treasurer of the district, and what will discharge it, and the direction as to payments in the warrant to be delivered to the district treasurer.

5. Rev. St. 1898, § 554, providing that the state superintendent, in apportioning the state school fund, shall withhold that portion which would otherwise go to any particular subdivision of the state, if it has failed to raise by tax a school fund as determined by the county board in pursuance of section 1074, does not show that the power to levy the school tax for the district is in the district, and not in the county board.

6. Under Laws 1891, p. 824, c. 124, § 111, providing that the city treasurer shall, after the payment of the state taxes, set aside all sums levied for school purposes, he must set aside the amount levied by the county board for school purposes in the city, though all such school tax is not collected.

Appeal from Circuit Court, Douglas County: A. J. Vinje, Judge.

Mandamus, on relation of the board of education of the city of Superior, against R. L. Hunter, city treasurer. Demurrer to the petition was sustained, and relators appeal. Reversed.

Mandamus action to compel the treasurer of the city of Superior, Douglas county, Wis., to set aside, for the use of the board of education of such city, of the moneys in his hands, a certain sum on account of the county levy of taxes for school purposes for 1902.

The material facts are these: The board of education of the city of Superior, under requisite funds for school purposes. The board exercised its power in that regard for the year 1902. The county board of supervisors subsequently levied, in form, a county school tax of $17,025.91 upon the taxable property of the city of Superior, to be placed in the tax roll of 1902 for collection. Such levy was duly certified to the city clerk of such city as a county tax, with other such taxes. It was so extended upon the tax roll of the city for 1902. The total of county taxes was $102,999.31. The warrant attached to the roll, in specifying the moneys to be paid to the county treasurer for county purposes, included therein the county school tax levy of $17,025.91. The amount of the delinquent return and the county orders taken in by the city treasurer in payment of taxes of 1902 was $107,661.78. The sum actually collected upon the county school tax levy was $14,625.25. That sum the treasurer set aside out of the total moneys collected by him for the use of the school board. The board demanded that he so set aside the balance necessary to make up a sum equal to the county school tax levy. He refused to do so, claiming that in no event could he be required to so set aside money out of a county levy for school purposes in excess of the amount actually realized by him therefrom.

Upon a verified petition on behalf of the board of education, setting forth such facts and others not necessary to mention, an alternative writ of mandamus was sued out, requiring the city treasurer to do the act he had refused to perform as aforesaid, or show cause why to the contrary. He demurred to the sufficiency of the petition. The demurrer was sustained and the relators appealed.

Geo. B. Hudnall, for appellants. Thos. E. Lyons, for respondent.

MARSHALL, J. (after stating the facts). The main question submitted for decision is this: Was the $17,025.91, extended upon the tax roll as a county school tax, a legal city school tax, to be treated as other such taxes? That depends upon a construction of sections 1074, 1076, 1079, Rev. St. 1898. Respondent suggests at the outset that the first section, which creates the power of the county board to levy school taxes, if any exists, applies only to towns. True, the term "town" only is used. But, viewing the entire scheme of the statutes in relation to the treatment of school taxes by county boards, it seems quite clear that such term was used in the broad sense of taxing district, whether town, city or village, and that it should be so construed under subdivision 17, § 4971, Rev. St. 1898, providing that the word "town," wherever used in the statutes, "may be construed to include all cities, wards or districts unless such construction would be repugnant to the

Digitized by Google

provisions of any act specially relating to the same." When all the provisions of law bearing on the subject are taken together, not only does it appear that there is no repugnancy therein to such a construction, but it appears that no other construction can be adopted without sacrificing harmony. We will quote the vital part of each of such provisions:

"Each town and city shall be required to raise by tax, annually, for the support of common schools therein, a sum not less than one-half the amount received by such town or city respectively for school purposes from the income of the school fund." Section 4, art. 10, Const.

"Provision shall be made by law for the distribution of the income of the school fund among the several towns and cities of the state for the support of common schools therein, * * * and no appropriation shall be made from the school fund to any city or town for the year in which said city or town shall fail to raise such tax." Section 5, art. 10, Const.

"The school fund income * * * shall be apportioned by the State Superintendent between the tenth and fifteenth days of December in each year. Such apportionment shall be made among the several counties, towns, villages and cities according to the number of children in each over the age of four and under the age of twenty years, as shown by the reports made to the state superintendent for the year preceding, ending June 30. Whenever any town, village or city shall fail in any year to raise by tax, for the support of common schools therein, a sum equal to the amount of its share of such school fund and other income as determined by the county board in pursuance of section 1074, the amount of the apportionment to such town, village or city for that year shall be withheld from the next succeeding apportionment, unless," etc. Section 554, Rev. St. 1898.

"The county board shall * * * determine by resolution the amount of tax to be levied in their county for county purposes for the year, and also the amount to be raised by tax in each town for the support of common schools therein for the ensuing year, which shall not in any town be less than the amount apportioned to such town in the last apportionment of the income of the school fund," etc. Section 1074, Rev. St. 1898.

"The county clerk shall apportion the county tax * * * among the several towns, cities and such villages as aforesaid therein; * * * and shall carry out in the record book aforesaid, opposite to the name of each in separate columns, the amount of state taxes and charges and the amount of county taxes so apportioned thereto, and also the amount to be raised as aforesaid for the support of common schools therein; * * * and within ten days after the assessment of values by the county board he shall certify to the clerk of, and charge to, each town, city and such village the amount of each and all such taxes so apportioned to and levied upon the same." Section 1076, Rev. St. 1898.

"Upon the receipt of the certificate of apportionment from the county clerk said town clerk shall, upon a uniform percentage, calculate and carry out in one item opposite to each valuation in said tax roll the amount required to be raised upon such valuation to realize in his town the whole amount of state, county, school and other taxes so certified," etc. Section 1079, Rev. St. 1898.

Thus it will be seen that the constitutional plan was to impose on each subdivision of the state acting directly in the collection of taxes, whether town, city or village, the duty to raise each year, for school purposes, an amount at least equal to the public money received from the state for such year. The word "city" is used with the same significance in the Constitution as the word "town." The same is true of section 554, which relates to the duty of the State Superintendent of Schools. While the section relating to the power of the county board to order the raising of school taxes uses only the word "town," it is followed by the section covering the subject of the certification of the action of the county board to the taxing districts, using the words "town," "city," and "villages," referring back, clearly, to the same taxing districts that are covered by the word "town" in section 1074. Section 1079, providing what shall be done pursuant to the county clerk's certificate mentioned in section 1076, says: "said town clerk shall," etc. It is obvious, however, that the reference was intended to include every clerk to whom a certificate is required to be sent; that is, to the clerks of villages and cities as well as of towns.

It seems to follow clearly from the foregoing that the county board had authority to determine by resolution an amount, resting on its mandate alone, to be raised in the city of Superior for 1902, for the support of common schools therein for the ensuing year. The authority was, not to impose upon the city a tax for county purposes, but a tax for city purposes. If the tax were deemed to have been levied as a county tax, and to have that character, we should be compelled to hold, as in State ex rel. School Directors v. Nelson, 105 Wis. 111, 80 N. W. 1105, that it was without authority of law, all payments thereof mere donations, and the clerk not bound to credit to the board of education any sum of money in excess of what he received. The facts of that case were these: A sum ordered to be raised under section 1074 was extended upon the tax roll of the taxing district as a county school tax and was treated as a tax for county purposes, a part being collected and turned over to the county treasurer. The question raised upon such facts was whether the money so turned

Digitized by Google

over was county money and properly in the custody of the county treasurer, or whether the proper custodian of the fund was the treasurer of the taxing district for the benefit of the schools therein. Deciding those propositions the court, speaking by Mr. Justice Dodge, said in substance this:

The whole transaction, strictly speaking, was void. The taxpayers, however, are not in a position to reclaim the money voluntarily paid. We may look upon it as a donation and consider which is the donee corporation. The county board had no authority to levy any school taxes for the use of the county. It had both the power and the duty to include in its resolution levying county taxes, and in the certification thereof to the town clerk, a direction to raise a certain amount of school taxes for the use of the school district corporation. The misdescription of the item as a county school tax was a mere mistake. The act in fact done was a direction authorized by statute. The subsequent acts in relation to the tax must be deemed to have occurred in executing that direction. There was the extension upon the tax roll and collection of the amount directed for the purpose prescribed by law—the use of the school district. The mistakes which thereafter occurred, of carrying the money collected into the funds of the county, did not change the ownership thereof. Therefore, such fund remains the property of the school district and should be in the custody of the town treasurer for its use.

Certainly, that leaves very little to be said as to the nature of the tax in question. It would be a play upon words, it seems, to hold that a resolution of a county board, levying taxes upon the taxable property of a county, the taxes to be apportioned between the various taxing districts thereof, and also containing a direction, as to each such taxing district, to raise a specified sum of money for school purposes therein, the amount of the county tax to be apportioned to each district and the amount of school taxes directed to be raised therein to be certified to the clerk thereof and placed in the tax roll for collection, is not a levy of taxes as to the school tax as well as the county tax. The word "levy" does not occur in section 1074 as to county taxes, nor as to school taxes. The power to determine the total amount of taxes to be raised for county purposes, in connection with the ministerial duty of the clerk to apportion the same among the various taxing districts of the county upon a basis predetermined by the board, is in legal effect a direction to each such taxing district to raise by taxation for the use of the county its proportional part; yet no one would venture to say that such action does not constitute a levy of taxes. Obviously, under the statute, the county board directs the raising, in each taxing district in the county, of a specified sum for county purposes, and a further specified fund for school purposes in such district, the legal effect in one case, as well as in the other, being to levy a tax.

The scheme of the statutes seems to be plainly as indicated. Three steps are rendered essential to charge the taxable property in a taxing district with the county school tax. They show unmistakably that the sum directed to be raised in the district by the board must, by force of its mandate, when duly evidenced to the clerk of the district, regardless of any other levy of school taxes, be spread upon the tax roll. First, the county board must "determine by resolution the amount of tax to be levied in their county for county purposes for the year, and also the amount to be raised by tax in each" taxing district "for the support of common schools therein for the ensuing year." Section 1074. Second, the county clerk is required to carry out in a book, opposite to the name of each taxing district in his county, "the amount of state taxes and charges and the amount of county taxes so apportioned thereto, and also the amount to be raised as aforesaid for the support of common schools therein"; and certify the same to the clerk of each such district, and to charge to such district "the amount of each and all such taxes so apportioned to and levied upon the same." Section 1076. Third, upon receipt by the clerk of any taxing district of the county clerk's certificate made as aforesaid, he is required to "carry out in one item opposite to each valuation in said tax roll the amount required to be raised upon such valuation to realize in his town the whole amount of state, county, school and other taxes so certified." Section 1079.

The law contemplates that the county board shall exercise legislative authority to levy the tax. It leaves nothing to be done thereafter to raise the amount of the levy except the performance of purely ministerial duties. The tax, as to each taxing district, though levied by the county board, is a town, city or village tax, as the case may be, not to be accounted for to the county treasurer. That is evident notwithstanding the language of section 1076, that the county school tax certified to any taxing district shall be charged to such district the same as county and state taxes so certified. The school tax does not concern the county at all, as it is raised in the taxing district for the benefit of the schools therein. That such is the legislative idea is evidenced by sections 1080, 1081 and 1116. The first section requires the treasurer of the taxing district, before the time for the delivery of the tax roll to him, to give a bond to the county treasurer in double the amount of the state and county taxes apportioned to his district. It will be noted that no obligation to account to the county treasurer for school taxes ordered to be raised is recognized; that only such taxes are recognized as are required to be apportioned between the various taxing districts of the

Digitized by Google

county by the county clerk. Section 1081 provides for the form of the warrant to be attached to the tax roll and delivered to the treasurer of the taxing district. Such form is to the effect that the treasurer of such district shall account to the county treasurer for state taxes and taxes levied for county purposes. Obviously, that does not include a school tax levied upon the taxing districts for the benefit of the schools therein. Section 1116 provides that the bond given by the treasurer of the taxing district to the county treasurer before receiving the tax roll, shall be discharged upon his accounting to the county treasurer for the full amount of the state taxes and the full amount of county taxes. The words "full amount of county taxes" obviously refer to the words "county taxes" in section 1080 which, as before indicated, excludes school taxes.

It has been suggested that section 554, in that it provides that the state superintendent, in apportioning the state school fund for any year shall withhold that portion which would otherwise go to any particular subdivision of the state if such subdivision shall have failed the previous year to raise by tax a school fund, "as determined by the county board in pursuance of section 1074," indicates a legislative purpose to treat the determination of the county board under such section as the mere creation of a condition precedent, to be satisfied by the power to levy taxes lodged in the taxing districts. Since the execution of the mandatory requirements of sections 1074, 1076 and 1079, if the taxes spread upon the tax roll as to any taxing district are collected, must necessarily result in raising the taxes as to such district essential to its right to participate in the distribution of the state school fund, it seems that the purpose of section 554 is to enforce the performance of such mandatory duties, and to secure the actual placing of a sum of money to the credit of the school board in the taxing district equal to its proper portion of the state school fund upon the peril of such portion being withheld. It will be noted that the section deals with the necessity of having a fund actually available as a condition precedent to participation in the benefits of the state school fund, in harmony with section 5, art. 10, of the Constitution. That is the constitutional and legislative plan as well. The condition precedent of the Constitution, and of section 554, does not stop with the mere levy of the school tax and extension of it upon the tax roll. It includes its collection or the fund being otherwise supplied. That is made unmistakable by the language of section 554 to the effect that any deficiency in the tax necessary to produce the fund ordered to be raised by the county board in any taxing district for the benefit of the schools therein, may be supplied by transferring the amount of the deficit to the credit of the school fund, from the general funds of the district. Thus every taxing district is not only required to place upon its tax roll for collection a school tax designed to produce the money directed to be raised by the county board for the benefit of the schools therein, but is bound to see that the levy actually yields the whole amount thereof, either by collections or by transferring, on account of uncollected taxes, money from the general funds of the district. That is the only way the constitutional requisite to the right to participate in the distribution of the state school fund can be fully satisfied.

The result of what we have said is that the $17,025.91, ordered by the county board of Douglas county to be raised in the city of Superior for the benefit of the schools therein for the year 1902, was legally extended upon the tax roll of such city as a city tax levied by county authority, not for the county, but for the city. The treatment of the levy in the treasurer's warrant as one for county purposes, by including it in the amount to be accounted for to the county treasurer, did not make it a county tax. Its character was fixed by the statute, not by the mistake of the city clerk in making out the warrant to the city treasurer, or any other mistake in treating the taxes as levied for county purposes. Being a levy of school taxes for the city of Superior there can be no reasonable controversy as to the right of the relator in respect thereto. Such right is plainly fixed by section 111 of the city charter (chapter 124, p. 824, Laws 1891), which provides that the city treasurer, each year, after payment of the state taxes for such year, "shall set aside all sums of money levied for school purposes." No distinction is there made between taxes voted by the school board and taxes directed to be raised by the county board. That supports fully the position of the relator and appellant. It was the duty of respondent, at the time of the issuance of the alternative writ of mandamus, to set aside, out of the money in his hands collected under his tax warrant of 1902, for the use of the school board, a sufficient sum to make, with the amount theretofore set aside, the full amount directed by the county board to be raised by the city for the benefit of the schools therein, the deficiency being $2,400.66. The order appealed from must therefore be reversed and the cause remanded with directions to overrule the demurrer and for further proceedings in accordance with this opinion.

So ordered.

CLARK v. CLARK et al.

(Supreme Court of Michigan. Oct. 27, 1903.)

PARTITION—SALE—DIVISION OF PROCEEDS—CLAIM—MAINTENANCE OF PARENT.

1. On division of proceeds of a partition sale, a claim by one party for the expense of supporting the mother of the parties was properly disallowed, where the evidence showed that claimant maintained the mother under an

Digitized by Google

agreement with the other party whereby, as compensation therefor, he had the use of the property; and this although the use of the property belonged to the mother, and not to such other party.

Appeal from Circuit Court, Washtenaw County, in Chancery; Edward D. Kinne, Judge.

Suit by Albert M. Clark against Arthur S. Clark and another. From a decree for complainant, defendants appeal. Affirmed.

Frank E. Jones, for appellants. J. W. Bennett and A. J. Sawyer & Son, for appellee.

CARPENTER, J. This is a suit to partition a house and lot, which complainant and defendant, who are brothers, own as tenants in common. The decree of the lower court ordered the property to be sold, and the proceeds of sale divided. Defendant claims compensation, out of these proceeds, for the reasonable worth of caring for and maintaining for many years the aged mother of complainant and himself. The trial court disallowed said claim, and the correctness of this decision is the sole question raised by this appeal.

We think the claim was properly disallowed. The testimony clearly proves, as found by the trial judge, that defendant maintained his mother under an agreement with complainant that, as compensation therefor, he should have the use of the property in suit, and that he did have the use of said property. Nor was defendant's agreement any less effectual because the consideration which supported it—the use of the property—belonged to the mother, and not to complainant. Rorabacher v. Lee, 16 Mich. 169.

The decree will be affirmed, with costs. The other Justices concurred.

BROWN v. RAPID RY. CO.

(Supreme Court of Michigan. Oct. 27, 1903.)

CARRIERS OF PASSENGERS — TICKETS — CONTROVERSY BETWEEN CONDUCTOR AND PASSENGER—DUTY OF PASSENGER.

1. As between the conductor of a railway train and the passenger, it is incumbent on the latter to produce as a ticket one apparently good on its face, or pay the fare in cash, and on failing so to do he may be ejected from the train by the conductor.

Error to Circuit Court, Wayne County; Flavius L. Brooke, Judge.

Action by Carrie Brown against the Rapid Railway Company. Judgment for defendant, and plaintiff brings error. Affirmed.

Fink & O'Connor, for appellant. L. S. Trowbridge, Jr. (Gray & Gray, of counsel), for appellee.

MONTGOMERY, J. This case is a companion case to that of Samuel J. Brown v. Rapid Railway Company, 90 N. W. 290. The present plaintiff is the wife of the plaintiff in that case, and was his companion on the occasion there adverted to. It appears in this case without dispute that the plaintiff's husband purchased for her a coupon ticket, composed of eight parts, the eighth part of which was signed by the general manager. The coupons attached thereto contained the statement, "Void if detached from signature coupon." Through no fault of plaintiff or her husband, these coupons were taken up separately by defendant's conductors, and, through an error, instead of taking up one of the coupons attached, one of the conductors took up the signature coupon, leaving in the hands of the plaintiff or her husband only the coupons without the signature. These detached coupons were accepted by various conductors until the second conductor on the return trip, a Mr. Gordon, objected to receiving them. The circumstances of how the ticket came to be detached were explained to the conductor, but the conductor assured the plaintiff that the ticket was no good, and demanded the payment of the fare, and upon the plaintiff's husband refusing to pay the fares the plaintiff was removed from the car without the use of any unnecessary force. The recovery of the plaintiff was limited to the amount paid for additional fare. Plaintiff brings error.

The rule of law in this state has been settled from the decision of Frederick v. Railway Company, 37 Mich. 342, 26 Am. Rep. 531, that, as between the conductor of a railway train and the passenger, it is incumbent upon the passenger to produce as a ticket one which is apparently good upon its face, or pay the fare in cash, and that, failing to do this, the conductor has the right to eject the passenger from the car. Any other rule would result in unseemly contests between the passenger and conductor, and would put upon the conductor the burden of determining at his peril, by facts not evidenced by the ticket produced, whether the passenger was entitled to a ride. This determination was reaffirmed in Mahoney v. Railway Company, 93 Mich. 612, 53 N. W. 793, 18 L. R. A. 335, 32 Am. St. Rep. 528; Heffron v. Railway Company, 92 Mich. 406, 52 N. W. 802, 16 L. R. A. 345, 31 Am. St. Rep. 601 (in an opinion by Mr. Justice Morse, where the case of Hufford v. Railroad Company, 64 Mich. 631, 31 N. W. 544, 8 Am. St. Rep. 859, is distinguished on the ground that in the Hufford Case the ticket was one purporting on its face to cover the distance to be traveled by Hufford). This case was again distinguished in the case of Van Dusan v. Railway Company, 97 Mich. 439, 56 N. W. 848, 37 Am. St. Rep. 354, and upon the same identical ground. The rule of law cannot be said to be in doubt in Michigan. The cases cited from other jurisdictions do not support the broad contention necessary to maintain the plaintiff's case. The case of Scofield v. Pennsylvania

¶ 1. See Carriers, vol. 9, Cent Dig. §§ 1423, 1432.

Digitized by Google

counsel, was a case in which it was shown that the railroad company had provided by its rules that a passenger should not be expelled from its trains without the case being first reported and passed upon by its representative, who would have an opportunity to get information and act advisedly. No such fact appears in the present case. We are not only content with the Michigan rule, but it is abundantly well shown by the cases cited in the brief of defendant's counsel that this rule is in full accord with the holding in other states.

The judgment will be affirmed, with costs. The other Justices concurred.

PETERSON v. MARK.

(Supreme Court of Michigan. Oct. 27, 1903.)

LOST CHILDREN—REWARDS—EVIDENCE.

1. Testimony that, when accosted by plaintiff, a boy for whom defendant had offered a reward, as lost, was going in the opposite direction to his home; that he asked plaintiff how far he was from a certain bridge, which was several hundred miles distant; and that plaintiff kept possession of him until he was taken by friends, who delivered him in accordance with the conditions of the reward—*held* sufficient to show that at the time of meeting plaintiff he was a lost boy, so as to entitle plaintiff to the reward.

Error to Circuit Court, Gogebic County; Norman W. Haire, Judge.

Action by George Peterson against Samuel L. Mark. Judgment for plaintiff, and defendant brings error. Affirmed.

Julius J. Patek, for appellant. Herb. M. Norris, for appellee.

CARPENTER, J. One Ben Mullewitch, a 16 year old boy, was for several days lost in the woods of the Upper Peninsula. Defendant offered a reward of $150 "for the delivery of the boy." Plaintiff, claiming that he was entitled to the reward, brought this suit, and recovered in the court below. Defendant seeks to reverse the judgment on the ground that it appeared by the undisputed testimony that the boy was not lost when plaintiff discovered him. Three witnesses, namely, the boy, Ben Mullewitch, one Mary Mullesza, and the plaintiff himself testify on this subject. According to the testimony of the two witnesses first named, the boy, in his wanderings, after striking the road upon which he was traveling when he met plaintiff, followed it five or six miles, until he came to the house of Mary Mullesza. There he was given his breakfast and informed of his location. He then started on this road for North Bessemer, and after going about half a mile he met the plaintiff. We should infer from the testimony of these witnesses that the boy at this time knew his whereabouts, and was on his way home, with full appreciation of his location lost. Can a different inference be drawn from the testimony of the plaintiff? Plaintiff drove a stage between Bessemer and North Bessemer. He testifies that on the 17th of July, 1902, while waiting for the arrival of the train at North Bessemer, he left his stage, and walked a short distance "down the road, to find the boy. I found him in the highway, coming towards North Bessemer. He was picking berries. * * * Then I took him in the stage. * * * We stayed there and talked a few minutes, and he says, 'I guess I will go home.' * * * I just thought to myself which way he wants to go, and he got out of the bus and walked towards the depot, and started up towards Thomaston. * * * I says, 'Come back; you are going the wrong way;' and I got him back into the stage, and he got to questioning me about a bridge that crossed over from Canada into this country. He asked me how far we was from that bridge." (We may take judicial notice that the bridge referred to was at Sault Ste. Marie, several hundred miles distant.) Plaintiff gave further testimony indicating that he kept possession of the boy until he was taken by friends, who delivered him in accordance with the conditions of the reward. We think it may be inferred from this testimony that the boy, when plaintiff met him, had not yet learned to fully appreciate his location and surroundings; that he had not yet recovered such possession of his faculties as to enable him to find his home; and therefore that he was, in a sense, a lost boy.

No other prejudicial error is complained of. The judgment will be affirmed, with costs. The other Justices concurred.

ANDERSON v. WIRTH.

(Supreme Court of Michigan. Oct. 27, 1903.)

BOUNDARIES—LOCATION—EVIDENCE—DETERMINATION.

1. The issue was whether the east side of a certain warehouse, standing on the easterly portion of a lot, was the eastern boundary of the lot. It was 50 feet from the east side of the warehouse to the center of a railroad track, the right of way being to the east of the lot. The plat of the subdivision made in 1872, fixed 50 feet as the distance between the center of the railroad track and the boundary of the lot. Shortly after the plat was made, and before the warehouse was built, the track had been moved 3 or 4 feet to the east. Assuming the east line of the warehouse to have been the eastern boundary, other lot lines, fixed shortly after the platting, were improperly located. Other buildings stood near the boundary, some 51 and some 51½ feet from the track, and there was a fence 54 feet therefrom. The city surveyor, in making a survey, had assumed the eastern line of the warehouse as the boundary, and the warehouse had been built in 1874 by the one who made the plat of the subdivision. *Held*, that the eastern line of the warehouse was not shown to be the eastern line of the lot, the moving of the railroad track and present distance of the track being antagonistic to such a view, and the building of the warehouse amounting

Digitized by Google

to a mere declaration, of no greater weight than the erection of the other buildings and monuments.

Error to Circuit Court, Wexford County; Clyde C. Chittenden, Judge.

Action by Andres P. Anderson against Henry Wirth. From a judgment in favor of plaintiff, defendant brings error. Reversed.

Sawyer & Bishop, for appellant. Charles E. Withey (J. E. Richardson, of counsel), for appellee.

CARPENTER, J. This is the second time this controversy has been in this court. On the former occasion (see 91 N. W. 157) it was reversed on account of error in excluding testimony respecting the location of the railroad track hereafter referred to. On the second trial, as on the first, plaintiff recovered a verdict and judgment. The controversy relates to the ownership of a strip of land 6 inches in width, which the plaintiff claims as a part of lot 5, block 1, Mitchell's revised plat of the city of Cadillac, and which the defendant claims as a part of lot 6 of said block. Lots 5 and 6, block 1, face on Harris street, which is a street running from Lake street, on the west, to the right of way of the Grand Rapids & Indiana Railroad Company, on the east. According to the plat, the distance from Lake street to the right of way is 319 feet. It is the claim of plaintiff that in fact this distance is 322 feet and 2 inches, and that the excess of 3 feet and 2 inches is to be apportioned among the lot owners; and, so apportioned, plaintiff is entitled to the 6 inches in controversy. If there is no excess, the defendant is entitled to recover.

There is no dispute as to the location of the eastern boundary of Lake street. That boundary is fixed by original monuments, now standing. Plaintiff's claim of an excess is based upon the fact that the distance from the boundary to the east side of a warehouse situated at least partly on lot 6 is 322 feet and 2 inches. If this east side of the warehouse can be treated as an original or fixed monument, plaintiff is entitled to recover. Otherwise he is not. It is 50 feet from the east side of this warehouse to the center of the railroad track, on the railroad's right of way, according to its present location; and the plat of this subdivision, made in July, 1872, fixed 50 feet as the distance between the center of said railroad track and the boundary of lot 6. The undisputed evidence in this case proves that shortly after the plat was made, and before the warehouse was built, the track was moved 3 or 4 feet to the east. Assuming, as we must, on the present record, this testimony to be true, it follows that the distance from the center of the track as at present located to the east boundary of lot 6 is not 50 feet, but 53 or 54 feet, and therefore that the east side of the warehouse does not mark said boundary. It could not mark said boundary, under this hypothesis, except upon the impossible assumption that the boundary moved when the track was moved.

There is other evidence, of a persuasive character, which tends to prove that the east boundary of the warehouse does not correctly mark the east boundary of lot 6. On the assumption that it does, the lot lines in the other parts of the subdivision, some of which were fixed by occupancy shortly after the land was platted, and about which there has been no dispute, are improperly located. "As between old boundary fences and any survey made after the monuments have disappeared, the fences are by far the better evidence of what the lines of a lot actually are." Diehl v. Zanger, 39 Mich. 601. The eastern boundary line of this plat was a straight line extending for several blocks. The warehouse in question is not the only monument standing near this boundary. There are other buildings. Some of these are 51, some 51½, and there is a fence 54 feet from the center of the track. In support of the claim that the east side of the warehouse does afford evidence of the location of the east boundary of lot 6 are these circumstances: First. Defendant's principal witness, Mr. Teed, city surveyor, assuming that it did fix such boundary, made several surveys of the land in question in 1880, and located the boundaries of a park immediately opposite. We need spend no time to prove that this affords no evidence of the true location of said boundary. Second. The warehouse in question was built in its present location in 1874 or 1875 by Mr. Mitchell, who made the plat of the whole subdivision in question. This circumstance amounts, at most, to a declaration on the part of Mr. Mitchell that the east side of the building marked the east boundary of his lot. If he made a mistake at that time, as we are bound to say, upon this record, he did, we know of no principle which entitles plaintiff to the benefit of that mistake, or which estops defendant from now asserting that the mistake was made. The location of said building affords precisely the same evidence of the location of the boundary line as is afforded by the location of the other buildings along said line, and that, under the circumstances stated in this opinion, is no evidence whatever.

It results from these views that the trial court erred in not directing a verdict for the defendant. Judgment reversed, and new trial ordered. The other Justices concurred.

ANDERSON v. VAN BUREN CIRCUIT JUDGE.

(Supreme Court of Michigan. Oct. 27, 1903.)

DOUBLE JEOPARDY—LIQUORS—ILLEGAL SALE—DRUGGIST'S STATEMENT—PERJURY.

1. Under Local Option Law, §§ 1, 25 (Pub. Acts 1899, pp. 276, 280, No. 183), prohibiting the sale of intoxicating liquors as a beverage and requiring druggists to make a wr

Digitized by Google

lefault thereof, to recover possession of the and. This petition is filed, praying that he Auditor General be required to cancel he deed to Griffin, and allow the petitioner o redeem, under sections 140 and 141 of the ax law.

Obviously, mandamus to compel this action n the part of the Auditor General cannot be llowed unless the assessment is void, or unless it be held that the sale to Griffin was unuthorized. Neither is true. The land was ssessed by metes and bounds, describing it s bounded on one side by land of H. F. Mangan in the assessment, and in the deed t is described as bounded by land of H. F. Munyan—evidently a clerical error. But it s unnecessary to determine how fatal it night be if it were the only description, as here is an additional description of land vhich fixes with certainty the land intended, 'iz., the east 90 feet of lot 3. Our tax laws ave for years recognized the impossibility f exact accuracy in assessing lands to the wner, and in failing to include parcels vhich should be subdivided. So by section 3 of the tax law (Act No. 206 of 1893) it is rovided that a person owning a part or parel of real estate assessed in one description nay pay on the part thus owned by paying n amount having the same relation to the vhole tax as the part on which payment is nade has to the whole parcel. By section 8 the same proceeding may be had after he taxes have been returned as unpaid to he county treasurer, and this payment may e made at any time before the day of sale. So by section 74 any person owning any ands which have been sold may at any time efore the 1st day of May in the year following such sale redeem any parcel of such ands by showing to the satisfaction of the ounty treasurer or Auditor General that he wns only that parcel which he proposes to edeem. But none of these steps were taken y the relator. And section 99 of the tax aw expressly provides that "No tax assessd upon any property, or sale therefor, shall e held invalid * * * on account of the roperty having been assessed without the ame of the owner, or in the name of any erson other than the owner." The relator, hen, had her opportunity to appear before he board of review and have her assessnent corrected, the opportunity of paying he tax upon the parcel owned by her while he tax rolls were in the county treasurer's ands, had the right to redeem the parcel o owned by her within the period fixed for edemption, and failed to avail herself of eiher opportunity.

It is further contended that she had the ight to redeem, under sections 140 and 141, after notice by the purchaser, by paying such roportion of the amount bid as the property wned by her bears to the whole assessed in

followed the law, and has made the deed to Griffin, the purchaser. The respective rights of Griffin and relator must be determined in proceedings to which Griffin is a party. The writ will be denied. The other Justices concurred.

BRADBURN v. WABASH R. CO. et al.

(Supreme Court of Michigan. Oct. 27, 1903.)

INJURY TO EMPLOYÉ—ASSUMPTION OF RISK—NEGLIGENCE—CONTRIBUTORY NEGLIGENCE—NOTICE OF DANGERS ALONG RAILROAD.

1. The question of assumption of risk is independent of those of negligence and contributory negligence, and applies only to risks of dangers obviously incident to the employment, which dangers the employé knows or should know.

2. A switchman does not assume the risk from lumber piles placed close to a switch track through a lumber yard, contrary to custom; he never having been there, and knowing nothing of the proximity of the piles, or of any fact from which he should have inferred it.

3. A railroad company knowing of the existence of lumber piles placed, contrary to custom, close to the switch track through a private lumber yard, is negligent in sending its switching crew there without apprising them of the danger.

4. A switchman, who, while swinging himself to the brake beam at the rear of a car from its side, was struck by a pile of lumber close to the track, of which he did not know, and which he could not see on account of the darkness, was not negligent in failing to get on the brake beam at first, instead of getting on the side of the car as it passed him; there having been broken boards lying in the middle of the track, so that, if he attempted to get on the brake beam before the train started, he would be liable to stub his toes or fall.

5. A notice by a railroad company to its employés, purporting to give nonclearing points on its tracks, first described 11 distinct points, opposite which were the words, "Will not clear a man on top or side of a car." Next was a description of 17 distinct points, opposite which was stated, "Will not clear a man hanging on side of a car." Between the eighth and ninth of these points were the words, "Material piled alongside of tracks." *Held*, that they described the character of the danger at the point specified immediately above them, and was not notice that material might be piled alongside any of the tracks.

Error to Circuit Court, Wayne County; George S. Hosmer, Judge.

Action by William G. Bradburn against the Wabash Railroad Company and another. Judgment for plaintiff, and defendants bring error. Affirmed.

Alfred Russell, for appellant Wabash Railroad Co. Frederick W. Stevens, for appellant Pere Marquette Railroad Co. Raymond E. Van Syckle, for appellee.

CARPENTER, J. Plaintiff sustained personal injuries while in the employ of the Union Terminal Association, a copartnership composed of the two defendants. He brought this suit for compensation, and recovered a verdict and judgment in the court below.

Digitized by Google

He was then, and had been for about two years, employed in defendants' yard at Detroit, in charge of a switching train. This Parker siding was situated on the ground of private individuals, adjoining defendants' tracks on the north. It formed a junction with defendants' tracks at the property of the Detroit Gas Company. It ran in a westerly direction through the property of said company, and through some adjacent lumber yards, a distance of 377 feet, nearly parallel with defendants' tracks. On the morning in question plaintiff had occasion to take out of said siding four empty cars, which were located near the western end of the siding. After attaching these cars to the engine, plaintiff ordered the engineer to move said train to defendants' main track. When he gave this order, plaintiff stood on the north side of the siding, about 15 feet from the rear end of the rear car. (This rear car was a Hocking Valley gondola car—so described—of extra width.) He jumped on the moving car as it passed him, and stood in the stirrup that hung underneath its side, near its rear end. He then undertook to swing himself around the corner of the car to the brake beam which hung underneath its rear end, in order that he might not, as we infer, be injured by collision with a coal chute standing on the gasworks property, which came within six or eight inches of the track. Before he had completed this change in his position, his left foot, which he had not yet removed from the stirrup on the side, was caught and crushed between said car and a pile of lumber situated about 25 feet beyond the property of the gas company. This pile of lumber was in the lumber yard, and situated very close to the track. It was about 3 feet in height. It had been there from 60 to 90 days. Before plaintiff's injury, defendants had notified the proprietor of the lumber yard "to move the piles of lumber along said track." We think this testimony warrants the inference that the existence and situation of the particular pile of lumber under consideration was known to defendants, for it certainly interfered with their business as much or more than any other pile of lumber in said yard. Plaintiff testified that it was so dark at the time of his injury that he could not see the pile (though he made a vigilant use of his eyes), and that he had no prior knowledge of its existence. He explains this ignorance by testifying that he had never been on the siding before, that the lumber pile could not be seen from the main track because the view of it was hidden by other piles, and that he made his entrance into the siding on the occasion of his injury, not by passing up the siding, but by walking through the lumber yard from a point on the main track to a point near the end of the siding. He also testifies that when he reached the siding he noticed that lumber was piled all along the tiff also testifies that it is customary in lumber yards to pile lumber four or five feet from the track, so as to leave "room enough for a man to walk alongside and do his work." He also testifies that where platforms are found on one side of the track "the other side is always clear." Other witnesses testified that there was a custom in lumber yards to pile lumber close to the track only on one side, so as to leave one side open for the shoving in and out of lumber out of a car door." There was evidence that plaintiff was notified in writing of certain points of danger in defendants' yard. This notice, as we shall point out later in this opinion, in our judgment had no material bearing on the case. It is contended by defendants that a verdict should have been directed in their favor, because: First, plaintiff's injury resulted from an assumed risk; second, there was no evidence of defendants' negligence; third, plaintiff was, as a matter of law, guilty of contributory negligence. It is also contended that the court erred in his charge to the jury respecting the construction of the notice served upon plaintiff.

1. Did plaintiff's injury result from an assumed risk? The principle which prevents recovery when an employé has assumed the risk should not be confounded—though it sometimes is—with the principle which prevents recovery when he himself is negligent, or when his employer is free from negligence. If the principle of assumed risk—as many seem to suppose—has application only to cases in which the employer would be held free from liability either on the ground that he has not been negligent or on the ground that the employé has been guilty of contributory negligence, it must be confessed that it is a principle of no great importance. While it must be conceded that the principle of assumed risk does sometimes furnish an additional ground for declaring the employer free from liability in cases where he is free from negligence and in cases where the employé is guilty of contributory negligence, that principle is nevertheless a distinct principle, and may be applied in cases in which the employer is negligent and the employé free from contributory negligence. The fact that the principle of assumed risk is sometimes applicable in cases where the employer is free from negligence and sometimes where the employé is guilty of contributory negligence only proves that the three principles—negligence, contributory negligence, and assumed risk—are consistent. It by no means proves their identity. The principle of assumed risk rests upon the ground that it is an implied contract between the employer and the employé that the employé shall assume the risk of all dangers obviously incident to his employment. See Bauer v. American Car & Foundry Co. (Mich.) 94 N. W. 9. The employé assumes the risk of all dan-

Digitized by Google

dangers. If the employer is not negligent in exposing the employé to those dangers, he is not liable for any injury resulting, for two reasons: (a) He himself is free from negligence; and (b) the employé has assumed the risk. When, however, the injury to the employé results from an assumed risk to which an ordinarily prudent employer would not have exposed him, there can be no recovery; not because the employer was not negligent—for he was negligent—but because the employé assumed the risk. It is equally clear that the principle of assumed risk is not confined in its application to cases in which the employé is guilty of contributory negligence. Cases, of course, often arise, in which the employé has assumed a risk which an ordinarily prudent person would not assume; and these, of course, may be disposed of on the double ground of assumed risk and contributory negligence. Cases also arise where the employé has assumed a risk which it was not negligent to assume, and these must be disposed of, not on the ground of contributory negligence, but on the ground of assumed risk. Can we say in the case at bar, under the showing made by plaintiff, that he assumed the risk which caused his injury? The doctrine of assumed risk applies, and is limited in its application, to dangers which the employé either actually knows or should know. Balhoff v. M. C. R. R. Co., 106 Mich. 606, 65 N. W. 592. Clearly, we cannot, without discrediting plaintiff's testimony, say that he actually knew the danger in question. Can we say that he should have known it? We cannot say that he should have known it, unless he should have inferred it from some fact or circumstance known to him, or open to his observation. If we credit his testimony there was no fact known to him from which he could have inferred this danger. Was any fact open to his observation from which he should have inferred it? If he had repeatedly passed in sight of this pile of lumber (see Ragon v. Tol., A. A. & N. M. Ry. Co., 97 Mich. 265, 56 N. W. 612, 37 Am. St. Rep. 336; Miller v. D., G. H. & M. Ry. Co. [Mich.] 95 N. W. 718), or if there was a custom which should have led him to anticipate that it might be piled in close proximity to the track (see Pahlan v. Detroit, etc., R. R. Co., 122 Mich. 232, 81 N. W. 103), it would be our duty to say that there was open to his observation some fact from which he should have inferred the existence of this danger. If his testimony is believed—and this was a question peculiarly for the jury—plaintiff had not, before this occasion, been in sight of this pile of lumber. Can we say that he should have anticipated the existence of this danger from the existence of a custom to pile lumber close to the track, open to his observation? If there was in fact such a custom, the case from it infer the existence of the danger to which he was exposed. There is, however, in this case, no evidence of such a custom, but, on the other hand, there is evidence that it was not customary to place these piles of lumber so close to the track. It is earnestly argued by the defendants that the testimony of the plaintiff respecting this alleged custom was inadmissible and insufficient on the ground that, "before a custom can be permitted to govern and modify the law in relation to the dealings of parties in any case, it must be uniform, certain, and sufficiently notorious to warrant the legal presumption that the parties contracted with reference to it." We do not think the testimony of plaintiff is open to criticism under this rule. He himself testified that his business had taken him into the lumber yards of Bay City, West Bay City, and Detroit; that there was a custom, as before stated, to pile lumber four or five feet away from the track. This testimony is corroborated by other witnesses. One of plaintiff's witnesses testified, as heretofore stated, that there was a custom in lumber yards to pile lumber close to the track only on one side, so as to "leave one side open for shoving in and out of lumber out of a car door." If this testimony is true, the inference might properly be drawn that defendants knew of said custom—an inference which is supported by the circumstance that, as heretofore stated, they notified the proprietor of the lumber yard "to move the piles of lumber along said track."

Is there force in the possible suggestion that, because plaintiff assumed the risk of injury from collision with permanent structures adjacent to the siding, he assumed the risk under consideration? If plaintiff's foot had been crushed by collision with the coal chute, located only a few feet distant, then clearly, under the authority of Pahlan v. Detroit, etc., Railroad Company, supra, we are bound to say that he assumed the risk, and could not recover. That holding proceeds upon the theory: "If he is not acquainted with the particular dangers of the line upon which he is at work, it is his duty to give attention to them. He must be on the lookout for buildings near the track, and know what persons usually know of the uses of side tracks and such dangers as naturally follow." It was not intended by this decision to hold that an employé assumes risk of dangers which he neither knew nor should know. The decision proceeds on the theory that the employé should know what is usually known, and that "it is usual for sidings to be so constructed as to permit cars to stand close to buildings." Clearly, this decision is no authority for the proposition that an employé assumes risks which are unusual, and which are not in fact known to him. It

Digitized by Google

a matter of fact, the testimony shows that at that point that particular danger existed. One receiving this notice would have a right, in our judgment, to place that construction upon it. If defendants intended to notify their employés that material might be found piled alongside of any of their tracks, there is no injustice in requiring them to make that intention manifest. In our judgment, therefore, the court did not err to defendants' prejudice by the use of the language complained of.

It results from these views that the judgment of the court below should be affirmed. The other Justices concurred.

CHEEVER v. FLINT LAND CO., Limited.

(Supreme Court of Michigan. Oct. 27, 1903.)

TAX SALES—PURCHASE FROM STATE—REDEMPTION—TAXES FOR SUBSEQUENT YEARS—PAYMENT.

1. Tax Law, § 84 (Comp. Laws 1897, § 3907, as amended by Pub. Acts 1899, p. 431, No. 262), relative to the purchase of land bid off by the state at tax sale, provides that the purchaser shall pay the amount for which the same was bid off, together with the other taxes which have been returned to the Auditor General and remain a lien on such lands at the time of the purchase. *Held*, that where land was sold for the taxes of a certain year, and bid off by the state, and was afterwards sold for the taxes of a subsequent year, such latter taxes were, notwithstanding the sale therefor, a lien on the land, within the statute, which a purchaser of the title of the state acquired at the first sale was required to pay.

2. Tax Laws, §§ 140, 141 (Comp. Laws 1897, §§ 3959, 3960, as amended by Pub. Acts 1899, p. 318, No. 204), provide that a purchaser of lands bid off by the state at tax sale is required to make a reconveyance to the owners upon payment of the amount paid upon such purchase, together with 100 per cent. in addition thereto. Section 94 requires a purchaser of land bid off by the state at tax sale to pay the amount for which the same was bid off, together with other taxes remaining a lien on the land at the time of the purchase. *Held* that, in order to entitle the owner to a reconveyance, he is required to repay the purchaser from the state the amounts paid by such purchaser to free the land from tax liens accruing subsequent to the year for which the sale was made, but prior to the time of the purchase from the state.

3. The fact that the owner paid to the Auditor General the taxes for such subsequent years did not entitle him to a reconveyance without paying to the purchaser from the state double the amount paid by him to free the land of liens for the taxes of those years.

Appeal from Circuit Court, Ogemaw County, in Chancery; Nelson Sharpe, Judge.

Action by Noah W. Cheever against the Flint Land Company, Limited. From a judgment for defendant, plaintiff appeals. Affirmed.

Noah W. Cheever, in pro. per. (F. L. Snodgrass, of counsel), for appellant. McFarlan & Wilson, for appellee.

the lands in controversy, that said lands were sold for the taxes levied thereon for the years 1892, 1893, and 1899, and bid in by the state; that the proceedings for the sale under the tax of 1893 were duly canceled by the Auditor General; that the time of redemption under the tax sale of 1899 did not expire until May 1, 1903; that on September 23, 1902, defendant purchased the state's title growing out of the sale for taxes of 1892, and paid therefor $33.10, and received a tax deed of said lands, dated November 10, 1902; that at the same time defendant paid the state on account of the tax for the year 1893 $29.94, and on account of the tax for the year 1899 $14.99; that on January 23, 1903, complainant paid the Auditor General $15.36 to redeem said lands from the sale for the taxes of 1899, and received a redemption certificate in due form, and also $30.50 to pay the taxes for the year 1893; that on February 2, 1903, complainant made a legal tender to defendant of double the amount paid by it for the tax of 1892, the amount paid by it on account of the tax of 1893, with 12 per cent. interest per annum (also other small sums, to which defendant was entitled, not material to this decision), and thereupon requested defendant to convey said land to him; and that the defendant refused to accept said tender and to make said conveyance. The bill prays a decree compelling said conveyance. To this bill, defendant demurred on the ground of the insufficiency of the amount tendered. This demurrer was sustained, and the question before us is whether that decision was correct.

The question involved in this case is whether defendant was entitled, upon this redemption, to demand 200 per cent. of the amount paid on account of the taxes for the years 1893 and 1899, as well as 200 per cent. of the amount paid for the state's bid. Defendant made its purchase by virtue of section 84 of the tax law (see Comp. Laws 1897, § 3907, as amended by Act 262 of the Public Acts of 1899, p. 431). That section required the purchaser to pay the Auditor General "the amount for which the same was bid off to the state, with interest * * * together with the other taxes which have been returned to the Auditor General and remain a lien on such lands at the time of the purchase so made, with interest thereon at the rate provided in this act." While the bill of complaint avers that defendant made its payments on account of the taxes of 1893 and 1899 "as provided by the statute," the point is made in the brief that the statute did not, according to the proper construction, require defendant to pay the tax of 1899. It is urged that, as a sale had been had on account of the nonpayment of this tax, it was not included in the language "other taxes which have been returned to the Auditor General

Digitized by Google

in section 82. We cannot approve this construction. It was the obvious purpose of this section to compel the purchaser to pay at the time of his purchase all claims which the state had against the land, growing out of the nonpayment of taxes thereon; and, in our judgment, it would be a strained and narrow construction of the language used, to decide that it did not include a tax under which a sale had been made, but which had not yet ripened into a title. We conclude, then, that defendant was bound by section 84, as a condition of purchasing the title of the state, to pay the tax for the year 1899, as well as for the year 1893.

Had it a right to demand a repayment of the amount paid for these taxes, and 100 per cent. in addition thereto, as a condition of a reconveyance to complainant? This depends upon the construction of sections 140 and 141 of the tax law (see Comp. Laws 1897, §§ 3959, 3960, as amended by act 204 of the Public Acts of 1899, p. 318). By section 140 the purchaser is required to notify the owners and other parties in interest that they are entitled to a reconveyance "upon payment * * * of all sums paid upon such purchase, together with 100 per cent. additional thereto," etc.; and by section 141 he is required to make "a reconveyance of such interest in such lands, so held, upon payment * * * of the amount paid upon such purchase, together with 100 per cent. in addition thereto," etc. As all the money to be repaid the purchaser under these sections is to be repaid together with 100 per cent. in addition thereto, it follows that, if there is any requirement whatever for the repayment of the amount paid for taxes, 200 per cent. of that amount must be repaid. In our judgment, the proper construction of the language above quoted entitles defendant to a repayment of all the money he has advanced to the state to procure the title. The language, "all sums paid upon such purchase," "the amount paid upon such purchase," clearly indicates the legislative intent that, as a condition of reconveyance, the purchaser of the state's title shall be repaid all that he has been compelled to advance to obtain his title. He would not obtain "the amount paid upon such purchase," unless included therein was the amount he had been required to pay for the tax liens on the land. Unless this construction is adopted, the owner redeeming from such title is under no obligation whatever to pay the amount paid by the purchaser from the state, to discharge the lien for taxes on the land, and this would often permit—indeed, in this case it would permit—the owner to redeem on repayment of less than the amount advanced by the purchaser.

In making the foregoing statement, we have not overlooked the contention of complainant that the result of his redeeming from the sale for the nonpayment of the

of the Auditor General the redemption money belonging to defendant, and which defendant can get on presentation of its certificate of sale. It is a sufficient answer to this contention to say that it was never contemplated by sections 140 and 141 that complainant should acquire any part of the defendant's interest in or claims against the land by payments to the Auditor General. The only way complainant, or one situated like him, can acquire defendant's interests in the land, is by dealing directly with defendant. The payment to the Auditor General was therefore unauthorized, and in no way reduced defendant's claims. Complainant urges, against this construction of the statute, that it, in effect, repeals section 74 of the tax law (see Comp. Laws 1897, § 3897, as amended by Act 262 of the Public Acts of 1899, p. 430), which gives the owner the right to redeem from a sale for the nonpayment of taxes on the payment of the amount for which it was sold, and interest at the rate of 12 per cent. We do not think that the effect of this construction is to repeal section 74. It is true, it makes that section inapplicable where the tax for which the land was sold has been paid by a purchaser of the title of the state. This is not inconsistent with the terms of the section itself. If any one having an interest in the land had paid this tax after the land had been sold, no other party in interest would have a right to redeem. Complainant has no more right to redeem from that sale than he has to pay to the Auditor General the tax for the year 1893. Defendant has paid to the state the tax for the year 1899, as well as the tax for the year 1893.

It results from this reasoning that the decree of the court below should be affirmed, with costs. The other Justices concurred.

DETROIT LIGHT GUARD BAND v. FIRST MICHIGAN INDEPENDENT INFANTRY et al.

(Supreme Court of Michigan. Oct. 27, 1903.)

VOLUNTARY ASSOCIATIONS—ACTIONS AGAINST—LIABILITY OF ASSOCIATION—OF INDIVIDUALS—SERVICES PERFORMED—RIGHT TO RECOVER—RELEASE BY MEMBERS—EFFECT.

1. Comp. Laws, § 10,025, providing that actions may be brought against unincorporated voluntary associations by the name by which they are known, and further providing that the act shall not take away the right of the litigant to proceed against the member of the association, affords an additional or cumulative remedy to that existing theretofore, and does not preclude a suit against the members and against the association jointly.

2. A voluntary association performed services under a contract for an agreed price. By agreement among its members, each was to receive an aliquot part of the agreed price as his compensation. The association brought suit on the contract, and certain members appeared by attorney in court, and stated that they were satisfied, and did not wish to pursue their

Digitized by Google

sociation's right to recover the full contract price of the services.

3. One who makes a contract on behalf of a voluntary association is personally liable thereon, although he is acting only as agent for the association, and does not intend to bind himself.

Error to Circuit Court, Wayne County; Joseph W. Donovan, Judge.

Action by the Detroit Light Guard Band against the First Michigan Independent Infantry and others. From the judgment rendered for it, plaintiff brings error. Reversed.

This case originated in justice court, where the plaintiff recovered a judgment against all of the defendants for the sum of $147.43. The suit is based upon the following contract: "Know All Men by These Presents, That according to a contract duly made and entered into this 29th day of June, 1900, between The Detroit Light Guard Band, party of the first part, and First Michigan Independent Infantry, party of the second part, said party of the first part contracts to furnish to the party of the second part a uniformed band of fifteen musicians, including drum major, for the encampment of the regiment, and to be under the orders of said colonel of the First Michigan Independent Infantry, party of the second part, from 9 o'clock a. m. on Sunday, July 1st, 1900, until 10 o'clock p. m. on Sunday, July 8th, 1900. And as remuneration for said services said First Regiment Michigan Independent Infantry, party of the second part, agrees to pay to H. W. Schmemann, treasurer of the Detroit Light Guard Band, party of the first part, two hundred and fifteen dollars, and expenses, which will consist of transportation and subsistence during the period of this contract. [Signed] W. C. Smith, For the Detroit Light Guard Band. [Signed] Jos. H. Hansjosten, Col. Comd'g. 1st M. I. I., For 1st Rgt. M. I. I." The services were performed, and defendant Hansjosten paid plaintiff thereon $76. Hansjosten alone appealed to the circuit court. He, as the commanding officer of the regiment, had charge of all the proceedings throughout the encampment for which the services were performed. Plaintiff and defendants are unincorporated volunteer associations. Upon the trial, one Hayes, an attorney, appeared, and stated that he represented 8 of the 15 members who performed the services; that they did not authorize the bringing of the suit; that they were satisfied, and did not wish to pursue their claim against the defendants. These 8 persons had, prior to the commencement of suit, severed all connection with the plaintiff. The court found that, under the arrangement between members of the plaintiff, the 15 men would receive $15 each under the contract; that, after certain expenses were paid, the net amount each receive $8.85. Each of the 8 persons was indebted to the band. The court directed a verdict for $61.95, making $8.85 each for the 7 men. The court also directed a verdict in favor of Hansjosten, holding that he acted simply as agent for the association, and was not liable as principal. The judgment was rendered against the defendant association.

In 1897 the Legislature passed an act reading as follows: "That whenever any unincorporated voluntary association, club or society, shall be formed in this state, composed of five members or more, having some distinguishing name, actions at law or in chancery may be brought by or against such association, club or society by the name by which it is known: provided, that this act shall not take away the right of the litigant to proceed against all the members of such association, club or society, if such litigant shall so elect to proceed." Comp. Laws, § 10,025.

Harry H. Wait, for appellant. Navin & Sheahan, for appellee Joseph H. Hansjosten.

GRANT, J. (after stating the facts). 1. Does the statute prevent the plaintiff from suing the association and members thereof jointly? It does not abrogate the right to sue the members. Jenkinson v. Wysner, 125 Mich. 89, 83 N. W. 1012. It is conceded by defendant's counsel that he could pursue a remedy against either the association or against the individual members. The only remedy before the enactment of the statute was against the individual members. Clark v. O'Rourke, 111 Mich. 108, 69 N. W. 147, 66 Am. St. Rep. 389. The statute authorizes suit to be brought by or against any such association, and provides that it shall not take away the right of a litigant to proceed against the members. This does not preclude the plaintiff from suing them jointly. It only provides an additional or cumulative remedy. The doctrine of election of remedies does not apply. Plaintiff has not elected to proceed against one but against both. See Jenkinson v. Wysner, 125 Mich. 90, 83 N. W. 1012.

2. The court was in error in holding that the plaintiff could not recover, as an association, the total amount due. The money was due, not to the individual members of the plaintiff association, but to the association itself, and was payable to its treasurer. It was then to be apportioned to those performing the services, according to their financial standing with the association. If the individual member was in debt to the association, the amount of his debt was deducted from the amount due him. The identity of the plaintiff association was not affected by the withdrawal of these eight members. The remaining members were entitled to all the rights, privileges, and property of the association. If the withdrawing members had

¶ 3. See Associations, vol. 4, Cent. Dig. § 35.

Digitized by Google

the introduction of evidence, and the remarks of counsel.

1. The Indictment.

(a) Contrary to the usual practice, which is to proceed by information, these proceedings rest upon an indictment found by a grand jury sitting in the circuit court for the county of Kent. The law provides for two judges in this circuit. It does not provide for two separate and distinct courts. It has one clerk, and all cases within the jurisdiction of the circuit court are commenced and tried there, except as the superior court jurisdiction affects such question. The law provides for a presiding judge, and that one judge may constitute a quorum. This grand jury was drawn under an order made when both judges were sitting, and counsel's first contention is that the law gives no authority for two judges to act, and, although it contemplates that each judge shall have full authority to perform any official act, that he cannot share the responsibility with his associate. See Comp. Laws, § 285. It is said that the presiding judge might have determined the question of a necessity for a grand jury, or might have referred the matter to his associate.

(b) Before the return of the venire, Judge Wolcott, who was sitting at the time, excused two jurors—one because he was a nonresident of the county, and one for the reason that he had not been served personally with the venire. He then directed the sheriff to fill the panel from the bystanders by summoning two men having the requisite qualifications. The sheriff called two men from among the bystanders, and they were sworn, without being examined as to their qualifications, and acted as members of such jury. Comp. Laws, § 11,875, provides: "Any court in which a grand jury may be sitting, may discharge any of the grand jurors for intoxication or other gross misconduct; and in case of such discharge, or in case of the sickness, death or non-attendance of any grand juror, after he shall have been sworn, the court may cause another juror to be summoned from among the bystanders, or inhabitants of the city, township or village, having the qualifications required by law, and to be sworn and serve in his stead." Section 342 is as follows: "In case the officers whose duty it is under this act to make and return lists of petit jurors, fail to meet, make or return said lists at the time and in the manner prescribed by this act; or in case said lists shall become exhausted; or in case said lists shall for any reason be declared illegal before the year for which they were made shall have expired, it shall be lawful for the circuit judge of any circuit court in this state to direct said officers to forthwith meet, make and return to the county clerk new year. And whenever, for any cause, grand or petit jurors shall not have been drawn and summoned to attend any circuit court, or a sufficient number of qualified jurors shall fail to appear, such court may, in its discretion, order a sufficient number of grand or petit jurors, or both, to be forthwith drawn and summoned to attend said court: provided, that in drawing jurors under this section, the court may for the purpose of obtaining a jury or talesman near the county seat, direct from which township or supervisor districts such jurors shall be drawn." Counsel insist that the action of the court was erroneous, and that these two men were summoned without authority of law. They say that the only lawful method was to have drawn from the list, and that, in any event, the persons drawn should have had the qualifications prescribed by law, which counsel sought to show, under their plea, these had not. These questions were raised by pleas in which counsel set up the facts relied upon. There were seven of these pleas, the first of which questioned the validity of the order impaneling the grand jury for the reason above stated. The second related to the filling of the panel as above described. The third charged that one of said talesmen was summoned collusively at the instigation of the prosecuting attorney. The fourth asserted that the prosecuting attorney or his assistant unlawfully consulted with and advised members of the jury. The fifth stated that the assistant prosecuting attorney appeared before and made an agreement to the jury after the evidence was taken, and participated in the deliberations, contrary to law (see section 11,-890). The sixth alleged that the defendant was not held to answer an indictment on the presentment of a grand jury lawfully drawn, and that the jury conducted its proceedings and deliberations in violation of article 5 of the amendments to the federal Constitution. This appears to have been based upon all of the alleged irregularities before mentioned, as well as other alleged misconduct of the jurors and prosecuting officers. The seventh plea alleged collusion between the prosecuting officers and one of the jurors. Issue was joined and tried upon the third and seventh pleas, and a verdict directed for the people. Counsel claim the question should not have been taken from the jury. Demurrers to the other pleas were sustained, and this is said to be error.

A full and complete answer to all of these attacks is found in the statute, sections 11,-881, 11,882, which provide:

"(11,881.) A person held to answer to any criminal charge, may object to the competency of any one summoned to serve as a grand juror, on the ground that he is the prosecutor or complainant upon any charge against such person; and if such objection

Digitized by Google

ted in the Constitution, for it was there eld to apply to other—i. e., local—legislative fficers. It must apply to all executive officers and to all judicial officers as well. The Constitution provides that the executive power is lodged in the Governor, but the statute ses the expression "executive officers." In Bouvier's Law Dictionary "executive power" s defined to be "authority exercised by that epartment of government which is charged with the administration or execution of the aws." Again, the author says (page 727), Executive officers, including the president, re required to execute the laws," etc. The Controller of the Treasury is classed as an xecutive officer. U. S. v. Realty Co., 163 U. S. 427, 16 Sup. Ct. 1120, 41 L. Ed. 215, 3 Wash. Law Rep. 33. In the case of People v. Hays, 4 Cal. 146, the court asks, "What is an executive officer?" and answers he question as follows: "He is one in whom esides the power to execute the laws. It will not be pretended that his honor the mayor undertook to execute any law in making the pretended redemption. The record shows, and the finding is, that no such law was passed. The answer is decisive. The mayor could not legislate. If he could, so also could the city treasurer, the street commissioner, or the collector of taxes. They are all executive officers, as well as ministerial. By way of illustration, let us consider how this would operate. Suppose the treasurer should take twenty thousand dollars of the public money, and purchase a lot upon his own volition, under the hallucination that it would benefit the corporation; or that the tax collector, thinking that a piece of property was about to be sacrificed, should apply funds collected for taxes to a like purpose; or that the street commissioner, under the impression that it would benefit the corporation, should undertake to open and grade streets at his own option. We need not go farther than to present the propositions to show their absurdity. These are all executive officers." See, also, Black's Law Dictionary, "Executive"; Attorney General v. Boston, 142 Mass. 200, 7 N. E. 722. In the case of State v. Womach, 4 Wash. 19, 29 Pac. 939, the statute under discussion punished the "offer of a bribe to any executive, judicial or ministerial officer." It was held to apply to a member of the State Board of Education, for the reason that he was an executive officer. It was said that the term "executive officer" was a comprehensive one, not limited to the officer in whom the Constitution vested the executive power, but included the executive departments, and it was further said: "The departments of the government provided for in our state Constitution, like most other state Constitutions, are divided into three general classifications, viz., the executive, judicial, and legislative; and when the officer classes." In the case of State v. Denny, Mayor, 118 Ind. 388, 21 N. E. 252, 4 L. R. A. 79, it was said: "Judicial power is the power to construe and interpret the Constitution and the laws, and make decrees determining controversies, and is vested in the courts. The executive power is the power to execute the laws, and is vested in the Governor of the state, the administrative officers of the state, counties, townships, towns, and cities. Then, to which one of these departments does the appointment to office belong?" In the Case of Railroad Commissioners, 15 Neb. 679, 50 N. W. 276, the court said: "First. Would railway commissioners be state executive officers, or would the office of railway commissioners of the state be a state executive office, if created by the Legislature? As railway commissioners are at present unknown to the Constitution and laws of this state, we take it for granted that the House, in the wording of the resolution, had reference to those officers as known to the laws of some of our sister states. In looking into the statute of the state of Iowa, for instance, we find a law making it the duty of the Governor, by and with the advice and consent of the executive council, to appoint three competent persons (one of whom shall be a civil engineer), who shall constitute a board of railroad commissioners, etc. The act in its several sections provides salaries for these commissioners, to be paid out of the state treasury; that they shall hold their office at the state capitol; and in many provisions makes their duties coextensive with the limits of the state. There can be no doubt, then, that were a commission of this general character provided for by an act of the Legislature of this state, and such act contained the same or similar provisions as those contained in the act of the Iowa Legislature referred to, such commissioners would be state officers. Whether they would be state executive officers, within the meaning of our Constitution, must be determined by an examination of the provisions of that instrument. The first clause of article 3 of the Constitution is in the following language: 'The powers of the government of this state are divided into three distinct departments—the legislative, executive and judicial.' Articles 3 and 4 are devoted to the legislative department, investing its authority in a Senate and House of Representatives, limiting their powers, apportioning their representation among the several counties of the state, etc. Article 5 is devoted to the executive department, and provides that it 'shall consist of a Governor, Lieutenant Governor, Secretary of State, Auditor of Public Accounts, Treasurer, Superintendent of Public Instruction, Attorney General, and Commissioner of Public Lands and Buildings,' etc. Article 6 is devoted to the 'judicial department.' The powers of the state government being thus,

Digitized by Google

by the fundamental law, divided into three distinct departments, it is clea competent for the Legislature to cr commission, and invest it with any power, without assigning the duties to one or the other of them. The and duties of railroad commissioner fined by the statute of Iowa above to, are inherently executive. Webst fining this word, says: 'In governm ecutive" is distinguished from "le and "judicial"; "legislative" beir to the organ or organs of governm make the laws, "judicial" to that terprets and applies the laws, a tive" to that which carries them Even were it not inhibited by o of the Constitution, we do not f is desired or contemplated to inv way commission with the pov laws, or even to interpret or ap that such duties would be to a the laws into effect. Hence would be executive, and, if s paid out of the state treasury, of duty coextensive with the t of the state, they would be officers."

In this discussion we sho subject of ministerial office tended that the city attorne ids belongs to that class, a is distinct and separate fro es named in the statute—i islative, and judicial offic authorities—e. g., the Ar Encyclopedia of Law—di into the four classes men & E. Enc. Law, 793. Th with respect to the natur ties, and in 20 Am. & E. will be found a definiti by ministerial acts and tution has made no n officers in its distribut government." Appare sufficient to classify th lative, and judicial, s that the officers in w ers are lodged, and signed, belong respe of these three class that mayors of citie class, senators and legislative class, w the judicial class. little difficulty in are legislative an we reach the exe not so easy. We ecutive officer is Constitution ves Governor; or w functions in th affairs, as con tive and judici ecutive class. former, should

Digitized by Google

strative as synonymous with 'executive, a ministerial duty; one in which nothing is left to discretion.'" See, also, Attorney General v. Boston, 142 Mass. 200, 7 N. E. 722, and the case of People v. Hays, 4 Cal. 146, already quoted from. In Black's Law Dic. tit. 'Administration," it is said: "The administration of government means the practical management and direction of the executive department, or of the public machinery or functions, or of the operations of the various organs of the sovereign. The term 'administration' is also conventionally applied to the whole class of public functionaries, or those in charge of the management of the executive department." Mechem, in his work on Public Officers (section 655), makes the following statement: "This class of officers is known by different names. They are sometimes called 'executive' officers, sometimes administrative,' sometimes 'ministerial,' and with slight shades of distinction; but for convenience sake, and as may properly be done, they will all be treated here under the general heading of 'ministerial' officers, and there will be included all officers whose duties are wholly or chiefly ministerial." It is no unusual thing to find cases where executive officers are called upon to perform acts in their nature judicial. See 1 Bouvier, Law Dic. pp. 726, 727; Cooley, Con. Lim. pp. 54, 108; Bridge Co. v. Co. Ct., 41 W. Va. 663, 671, 24 S. E. 1002—where it is said, "When it becomes necessary to determine a question of fact or law, the act is judicial."

In the Indiana Constitution article 7 is headed "Judicial," and section 11 of that article is headed "Prosecuting Attorneys." "There shall be elected in each judicial circuit by the voters thereof, a prosecuting attorney, who shall hold his office for two years." This seems to be all the provisions on the subject of whether the prosecuting attorney is a judicial officer. In a bribery case in Indiana it was charged that one Henning, who was prosecuting attorney, accepted a bribe from Becker to induce him to prevent the grand jury from indicting Becker. The indictment, on motion, was quashed, and the state appealed. The court said: "The turning point in the case is this: Is a prosecuting attorney an officer intrusted with the administration of justice? He is a judicial officer, created by the Constitution of the state. 1 Gav. & H. St. p. 47, § 11. He is the law officer of the court, to whom are intrusted all prosecutions for felonies and misdemeanors. 2 Gav. & H. St. p. 430, c. 3, § 4. He is legal adviser of the grand jury. We think he is an officer intrusted with the administration of justice." State v. Henning, 33 Ind. 189. In the Texas Constitution district attorneys were classed as judicial officers. Subsequently the law provided for county attorneys. The Supreme Court said: "We have enumerated and classed as judicial officers; and the fact that they are not included in article 1871 makes them none the less judicial officers. By the second article of the Constitution of 1869 the powers of the government are divided into executive, legislative, and judicial; and this is but the maxim of all republican states. Upon county attorneys, under the law of 1866, in their respective counties, devolve the duties and responsibilities of district attorneys." State v. Currie, 35 Tex. 17. In federal affairs we have a Department of Justice, under which many lawyers take appointments and perform duties pertaining to the legal affairs of the government; and one of our number suggests that Ontario has its "Minister of Justice." In the case of Gleason v. Peerless Mfg. Co., 1 App. Div. 259, 37 N. Y. Supp. 267, in discussing the use of the word "judicial" as applied to officers, it was said: "In this class of cases the term 'judicial' is not used in the sense of appertaining to the judiciary or administration of justice, but as indicating the exercise of discretion or judgment as distinguished from what is purely ministerial." And in Friedman v. Mathes, 8 Heisk. 502, the following language is found: "If an officer do an act depending upon the exercise of the slightest judgment or discretion on his part, then the act is judicial, whatever may be the general functions of the officer." New York declares attorneys to be judicial officers. See 1 Rev. St. N. Y. p. 370, and In re Baum (Sup.) 8 N. Y. Supp. 771. It does not follow, from these authorities, that the classification of an officer is to be determined from the nature of isolated acts or functions, but rather the contrary. We have no doubt that the classification of a prosecuting attorney in Indiana, New York, and Texas is fixed by the statutory provisions quoted. But in the absence of such statutes we are not certain that they should not be classified as executive officers, notwithstanding the fact that certain acts may be judicial; and the same may be said of the city attorney of Grand Rapids, and notwithstanding the fact that there appears to be a sense in which they may be called judicial officers. It matters little, however, which we call it. It is enough that the defendant comes within one or the other of the classes, and it is as obvious that all official acts, whether executive or judicial, are within its terms.

If defendant cannot be called a judicial officer, he must be within the class called "executive," and, if the act is not a judicial act, but is nevertheless an official act or duty, it is none the less covered by the statute. It is unimportant that the indictment alleges that the defendant is a judicial officer, or that the act was a judicial act. It is explained and corrected, if erroneous, by the statement of his office and act. The law will

Digitized by Google

noon which are no concern of this jury. The court purposely excluded the jury from the room so that you might have no knowledge of what has taken place here. I want to say to you further that the court strictly enjoins upon you and each one of you that you hold no conversation with any person whatsoever in relation to the proceedings this afternoon while you have been excluded from the courtroom; and, further, that you do not read in any newspaper the accounts, if they are published, of the occurrences which have been kept from you to-day. You are to consider in this case, as you already know, under your oaths, only the evidence that you hear from the witnesses; only such evidence as, under the rulings of the court, is permitted to be given in your hearing. More than that you have no right to consider it. And you are strictly enjoined by the court neither to converse with anybody in relation to this case in any of its aspects, nor in relation to what may have been said in this courtroom while you were out of it this afternoon. I might add that these commands of the court with relation to the trial of the case are binding upon the jury, and, should any misconduct of the jurymen come to the notice of the court in any respect in which the court has charged you, it would be contempt of court, and would justify the court in imposing a penalty. I say not in the way of warning, or threatening, or anything of that kind, nor that the court thinks that you would disregard any injunction of the court, but simply that you may be fully advised as to what your duties are and what your rights are in this matter. The court will not proceed further this afternoon with the trial of the case. When the court adjourns it will be until the usual hour to-morrow, but I wish each of the jurymen to bear in mind distinctly what the court has stated to you this afternoon."

When court opened the next day the following occurred: "The Court: The officer will take the jury to the juryroom a moment. In relation to this matter that was brought to the attention of the court yesterday afternoon, since the adjournment of court, the prosecuting attorney has stated to the judge the matters on which his statement here was based. It seems to the court a matter of very great import, and one that, in the judgment of the court, demands of necessity a prompt investigation. I am inclined to think, however, that the proper procedure, instead of examination of witnesses here in court, which would undoubtedly necessitate a good deal of time, the prosecutor should reduce the affidavits so far as possible, such proof as is within his possession touching this matter, and present it here to the court. The court will consider it, and take such action as seems to be warranted by the showing made. The court is disposed to either take that course or to permit the inquiry to be made as was proposed yesterday in open court. The judgment of the court is that the ordinary practice, the regular practice, perhaps, where an order to show cause is asked for an alleged contempt, is to present the matter to the court by affidavits; and, if the court deems the showing sufficient, to order an order to show cause to issue thereon. The court will not fix the time in which the prosecutor shall present that to the court, but the court will request that it be done at the earliest moment possible, in order that the investigation of this matter, the bringing of it properly and regularly before the court, may not be delayed a moment longer than is absolutely necessary. It may be done this afternoon. If the affidavits or showing cannot be procured at that time, it may be done at the coming in of the court on Monday morning. Mr. Ward: I suppose it is the purpose to go on with the case this forenoon, then? The Court: My intention is to go on with the case for this forenoon. I had thought that the case is likely to be of considerable length, and rather a burdensome case; that, perhaps, if we run until Saturday noon, that it will be all that ought to be asked of the counsel and the jury, and not continued during the afternoon of Saturday, and probably resume the case on the afternoon of Monday. Mr. Ward: We will act upon the suggestion of the court, and do it as quickly as possible. It is possible that the court doesn't wholly comprehend how much work he is asking of the prosecutor in making this suggestion. It should be borne in mind that the prosecutor, of course, has been engaged in this trial, and will be evidently until noon to-day, with plenty of work to take up every minute of his time, if he could have it, in the preparation of the case to go on next Monday again. But this request will necessarily require the prosecutor to spend a large amount of time in the preparation of these affidavits. It is not an easy matter to get the witnesses together, nor prepare them. I don't know whether the prosecutor can stand it to work night and day for the next six weeks or not, but I will do the best I can. The Court: The court did not intend, by requesting it to be done as soon as possible, to ask anything impossible of the prosecutor. Of course, such time as is necessary will be given, whether it is Monday or some other time. The court simply stated that it be done as soon as possible, in view of what seemed to the court the gravity of the matter—a matter of import; and any investigation of it ought not to be delayed any longer than possible. Of course, it is understood and the court appreciates the duties already devolving upon the prosecutor in the regular conduct of the case, and all the court has to suggest is that it be done as soon as you are able to do it consistent with your other necessary duties. I have suggested this course as it seemed to the court that the proposed inquiry in open court would be likely to consume perhaps a good deal of time, and present

Digitized by Google

that any member of the ...ter, and there is ...of what occurred after he left the ...m. It appears that the facts were not stated in detail by counsel, and no affidavit was filed, until after the jury was placed in charge of the officer. Counsel say that they must have heard of this during the period which elapsed between the time when Mr. Ward called attention to the matter and the order to the officer to take charge of the jury. We cannot assume that the subject was discussed by outsiders or others in the presence of jurors, or that jurors deliberately violated their oaths or the instructions of the court. Doubtless the court would have made the order to confine the jury earlier, had counsel asked it, and had he considered it necessary. In most cases jurors are allowed to go at large, unless counsel ask their confinement. Doubts they sometimes hear discussions and comments about the case upon trial. At least, we is a prevailing impression that they do. the law relies upon their integrity and lience, and verdicts are not lightly set e for such a reason. Here we not only no precautions taken by the defendant's sel to guard against this danger, but we no evidence of any misconduct on the of any one.

he Evidence of Bribery Upon the Trial.

e foregoing discussion leads naturally to uestion of the admissibility of evidence e alleged bribery, which was introduced the rebuttal by counsel for the people. el for the defendant maintain that it ot competent to show conversations be- the prosecutor's witness Garman and Nichols, defendant's counsel, or others, e to the alleged bribery; while the l for the people say that such of the tes- as was introduced by them in the first e was admissible, and that the cross- ation and testimony subsequently of- or defendant opened the door for the ransaction. As we understand the rec- was claimed by the defense that one or tters were written by McGarry, and and received by the witness Garman, re was some testimony to that effect. n counsel for the defense called upon uncan, McGarry's stenographer, who some typewritten papers, which she e copies of letters dictated by Mc- her as letters to Mr. Garman, and were printed by her and mailed to It was claimed that one or more were copies of letters shown to have ered to Garman. Tessie Duncan's was given after the charge of brib- ade. Subsequently counsel for the called Garman for further cross- n, and asked him regarding the aim of the original letters of which identified by Miss Duncan were copies. Some of these he denied d others he was not certain about.

On redirect he was asked what the reason that he was not certain about such lett His answer was that he "wished to be ve careful, because Mr. Nichols had showed hi several spurious letters." This was objecte to, and counsel for the people said that it was proper testimony, for the reason that "the defense had asked about his being uncertain about these letters, and doubtless wished to make comments upon his want of certainty." The following then occurred: "The Court: It seems to the court that this question, perhaps, might be answered. The court does not intend to change the ruling made the other day in relation to entering into a matter that the court held was not admissible in this case. At the same time the inability of the witness to recognize certain letters and telegrams, I suppose, was put in the case for a purpose. Mr. Nichols: Put in the case for the purpose of asking if he did recognize them. Of course, if they were introduced afterward, the question might be opened, possibly. Mr. Grove: I move that the answer be stricken out, highly improper. The Court: I think the court will allow it to remain, although, as the court now understands the matter, the whole subject is not up for discussion, but possibly as an explanation of his statement that he was unable to recognize certain letters, or his care and caution in the matter. As an explanation of that, the answer so far as given may remain. Mr. Grove: I take an exception to the ruling of the court. Mr. Ward: I did not expect to go beyond what the ruling indicates. I recognized the ruling of the court. Q. When and where was that? A. In New York City. Q. When? A. It was on the 8th day of October. Mr. Grove: Objected to as immaterial. I submit that this is wholly immaterial. He has given the reason. The Court: Is your objection to the present question? Mr. Grove: Yes, the last two questions—when and where it was. He has given his reason for want of recollection. The details of it are not material. The Court: The details of it are not material, but the time when and where, it seems to the court, possibly is material, in connection with the other answer given by the witness." This is as far as the subject was pursued at that time. Apparently these copies had not been offered in evidence at that time, but they were later, when the defense was made. After the defense was closed, testimony in rebuttal was introduced. Garman was recalled, and testified that Exhibit 77, purporting to be a copy of one of these letters from McGarry to himself, had never been received by him. The following then occurred: "Q. I will ask you if you ever, at any time, seen what was claimed to be another copy of that letter? A. I have seen what was purporting to be a copy. Q. Where did you see it? A. In New York, in Mr. Nichols' hands. Q. When? A. The 8th day of October. Q. 1901? A. 1901. Q. What kind of paper was the letter or purported copy of letter that Mr. Nichols showed you upon? Mr. McDonald: I object to that as

Digitized by Google

Court: The objection is overruled. Mr. McDonald: An exception. A. It was on long typewritten paper; the kind that they use on typewriter; not letter paper. Q. Not cut short, like that for letter purposes? A. No, sir. Q. You mean long typewritten paper, the length of a sheet of foolscap? A. I do. Q. Legal cap? Were you asked at that time to make any marks or memoranda on that purported copy of paper? A. I was. Mr. McDonald: Wait a moment. I object to that as incompetent and immaterial. The Court: The objection is overruled. Mr. McDonald: An exception. A. I was. Q. Did you do it? A. I did. Q. At whose request did you do it? A. Mr. Nichols. Q. In what way did you mark it? A. My initials. Mr. McDonald: The same objection. A. Along the side. Q. Where did you meet Mr. Nichols? A. 29 Broadway: Mr. Louis A. Richter's office, consul to Bolivia. Q. Did you have any conversation there with Nichols as to whether that was a copy of the letter? Mr. Nichols: That is objected to as being incompetent, immaterial, and irrelevant. The Court: It seems to the court that, the letters having been put in evidence, that any inquiry such as proposed by this question would have a bearing on the genuineness of the letter that has already been put in, I understand, by this defense. The court has already ruled that the inquiry may be made, the question answered. Mr. Nichols: Take an exception. A. I did. Q. I wish you would state what was said. Mr. McKnight: I object to that. Anything that he might have said wouldn't be binding on Mr. Salsbury in any way, shape, or manner. The Court: It covers the same point, as the court understands it. You may take the answer. Mr. Morse: Take an exception. A. I called his attention to the falseness of the letter, and he admitted it; said it was; but he said it was necessary for his case, and that he must have it, and wanted me to initial—put my initials—on the side of the letter, so that I would know that the letter was not changed. Q. I show you Exhibit 79. Purports to be a letter of July 26. Just look at that, and see what it is about, and see whether a letter purporting to be a copy of that copy was shown you at the same time. A. A copy of this letter, as near as I can remember, was shown me at the same time. Q. Did you ever receive from Mr. McGarry a letter such as that purports to be? A. I never did. Q. Did you have any conversation with Mr. Nichols in regard to that letter? Mr. McKnight: The same objection—incompetent, immaterial. The Court: The same ruling. Mr. McKnight: An exception. A. There were quite a number of letters that I had the same conversation about. Mr. McDonald: I object to that, and ask to have it stricken out. The Court: The answer of the witness may remain. Mr. Morse: An exception. Q. As to whether this was one of those letters? A. It was. Q. Did you put your initials upon you put your initials on all the letters that he showed you? A. I think I did. He read several of them, and had quite a number of more there, which I didn't read and he didn't read, but I called his attention that they were fakes. He admitted it, but wanted me to go ahead and put my initials on them. Q. Was there any statement in connection with those letters prepared by Mr. Nichols for you to sign at that time? Mr. Nichols: That is objected to. I don't think that is competent, relevant, and material. The Court: The court has admitted this testimony as bearing on the genuineness of these letters. Unless the statement had some reference to the letters—bore on the same matter—it would seem to the court to come within the ruling that the court made when this matter was argued before the court. Mr. Ward: I will waive that at the present time, and I will ask you whether or not, at the time that Mr. Nichols showed you those letters, and got you to put your initials upon those purported copies, any money was offered or paid you by Mr. Nichols to do it. Mr. McKnight: I object to it as incompetent and immaterial. The Court: You may take the answer. Mr. McKnight: An exception. A. Yes, sir. Q. Do you say money was paid you? A. It was. Q. How much? A. $500. Q. What was the talk between you and Mr. Nichols as to what he wanted you to do about it? A. He wanted— Mr. McKnight: The same objection. Q. If anything— Mr. McKnight: Incompetent and immaterial. The Court: If it relates to the matter of these letters, it may be received. A. He wished me to— Mr. McDonald: Wait a moment. The witness ought to be asked if it relates. Q. What did he say in relation to the letters? A. He admitted they were fakes. Said they were absolutely necessary to the evidence for the defense, and that he must get them in some way, and he knew no other way to get them in but to have me admit them. Q. Admit them in court, you mean? A. Admit them in court. Q. What did he say—what did he say about wanting you to admit them in court, if anything? A. Well, that is the reason why he wanted me to initial them, so that I would know that they were not changed; and that they were fakes he admitted, but that they were filled in according to the plan that he had outlined for the defense, and that was as good a plan as he could think of, and that one lie was just as good as another lie. Q. When you got on the witness stand, what were you to do? Was there any talk about it? A. I was to admit them. Q. That is, he desired you to admit them, swear they were genuine letters, is that the idea? A. That was what he wanted me to do. Q. Was there any talk at that time about Mr. Nichols paying any more money at a future time? Mr. McKnight: I object to it as incompetent and immaterial. The Court: Find out if it had relation to these letters in any way. Q. I mean consideration—what he

Digitized by Google

purpose. The Court: You may take the testimony. Mr. McKnight: An exception. The Court: The answer to that question. A. $1,000 more was to be paid, provided I didn't show up, and the trial would be postponed. Mr. Nichols: I ask to strike that out. The Court: That apparently had no relation to the letters. It may be stricken out, the last answer. Q. Then I will ask you if, after you came to Grand Rapids to be a witness here, you had further talks in relation to Mr. Nichols in regard to the same letters? Mr. McKnight: I object to it. A. With Mr. Nichols? Mr. McKnight: Incompetent and immaterial. The Court: In relation to the letters is the question. Mr. Ward: Yes. The Court: You may take the answer. A. I had a talk with Mr. Nichols about changing my testimony. Mr. Nichols: That, I ask to strike that out. The Court: That, I think, may be stricken out. Q. I will ask you whether in any of those talks with Mr. Nichols these letters were mentioned. A. They were in one talk. Q. What talk was that? A. I think that was on Wednesday morning. I met him at the Morton House. I am not positive in regard to that he said he wanted to be sure those letters got in. Q. At that time was there any talk about your receiving any more money? Mr. Nichols: That is objected to as being incompetent. Q. In connection with your testimony in regard to these letters? Mr. Nichols: That is objected to. The Court: If it is in relation to the letters the answer may be taken. Mr. Morse: An exception. Mr. McKnight: It leaves it in the judgment of the witness. The Court: The question included that as I understand it. A. I was to be paid a larger sum of money. Q. What sum was talked of? Mr. Nichols: That is objected to. That has been stricken out once. He hadn't stated it was in relation to these letters. The Court: Better ask the witness whether it was in relation to these letters or not. Q. I will ask you whether these letters were included in the talk. A. Of course, the letters were included in one talk, as I testified. Q. And these other letters? I will ask you whether the other conversation that you had was along the same line, with Mr. Nichols? A. It was the line of changing my testimony and admitting these letters. Mr. McKnight: I ask that that be stricken out. The Court: The portion in relation to the other matter may be stricken out. The question that was asked, I think, is a general question. Perhaps it is objectionable on some other ground. Mr. Ward: I will waive that question. Q. I will waive the last question, and ask you, after your conversation with Mr. Nichols in New York, and the time that you put your initials upon those letters, when did you next see him? A. I saw him at the Morton House on a Wednesday morning after I got there. Q. How did you happen to see him? Of course, you saw him here in court. A. Yes, sir; out of court. Q. Where did you have any private conversation with him at that time? Mr. McKnight: I object to that. Mr. Morse: This whole matter comes under our objection, as I understand it. The Court: You may take the answer. Mr. Morse: I do not understand that it is necessary, your honor, to make a separate objection. A. In the private parlor of the Morton House. Mr. Morse: Note an exception. Q. Now, I will ask you how you happened to meet him there? I will ask you if you received any message of any kind? A. A message was put in my hand. Q. You say a message was placed in your hands? A. The night before, at my hotel. Q. Who delivered the message to you? A. A man—that I have since learned—whose name is William Leonard. Q. Did you know him at that time? A. I did not." Then followed in detail the alleged circumstances and conversations between the witness and Nichols, including the payment of money to the witness by one said to be an emissary of Nichols, which need not be set forth.

It is claimed by counsel that this testimony was admissible upon the grounds: First, as evidence in chief upon the principle that deceit, falsehood, and attempted subornation tend to show guilt; second, as legitimate cross-examination in relation to Garman's uncertainty of the authenticity of said copies. We recognize the rule stated in the first proposition, viz., that evidence that a defendant has attempted to suppress testimony or induce perjury is admissible, and tends to show guilt. Our own cases are in point, and, so far as we know, they are in harmony with the current of authority upon that subject. Moreover, the rule would apply to an attempt made by another at the instigation of a defendant (People v. Arnold, 43 Mich. 303, 5 N. W. 385, 58 Am. Rep. 182); but before such evidence can be considered it must be made to appear that the effort was made at the instigation of the defendant, or with his consent or approval, or at least knowledge or expectation that it had been or would be made. See Dillin v. People, 8 Mich. 369; People v. Marion, 29 Mich. 39. If that appears in the case, it is by circumstantial evidence, and it is hardly supposable that it should otherwise appear. The circumstances relied upon may not exclude a reasonable doubt, but that is not the question. It is rather whether they tend to establish such fact. The circumstances shown were that these things were done on the eve of and during the trial by counsel acting upon the part of the defense; the negotiations were accompanied by the payment to the witness of a large amount of money; the attempt, if successful, would tend to benefit the defendant; conversations had between the witness and Nichols, both in New York and Grand

Digitized by Google

ie, their acts and conversations are so when part of the res gestæ. We think the testi-ony complained of in assignment 49, and elating to the codes, letters, telegrams, con-acts, etc., was properly received. What-ver was done by any of these persons in fur-hering the enterprise was admissible upon he theory that they were co-conspirators, nd there is nothing in the point that such vidence should be limited to transactions in hich the conspirators only participated—a roposition that would seem obvious.

We do not feel called upon to discuss at ngth the many claims that the remarks of ounsel were improper. The suggestion to he jury that defendant did not testify was nproper, and was at once admitted to be by im. The court also alluded to it in his harge. There was much said upon the trial alculated to irritate and provoke strong tatements. Apparently counsel for the peo-le endeavored to keep within just and proper ules, and they appear to have evinced as uch moderation as could be expected under he sting of repeated accusations of unfair-ess and unprofessional conduct in which his record abounds. Under the circum-tances the defendant is in no position to ask hat the case be reversed upon the ground of ntemperate language used by people's coun-el.

The prosecutor is alleged to have had in is possession notes of testimony taken be-ore the grand jury, from which he put ques-ions to defendant's witnesses, and to have efused to exhibit it to defendant's counsel. t was not necessary to show these notes ither to the witness or his counsel. They vere not of the character of a deposition or rivate writing, and therefore not within the ule stated in Lightfoot v. The People, 16 Mich. 507.

One of the grand jurors—being the one who cted as secretary of the jury—was called o impeach one or more of the witnesses as o statements made before such jury, and vas examined in the usual way. On cross-xamination he was asked to read from the tenographic notes taken by him of proceed-ngs before the grand jury, by which he re-reshed his memory, all of the testimony of uch witnesses. The court sustained an ob-ection to this. Counsel did not ask to see he stenographic notes and cross-examine pon them, but contented themselves with he claim that the prosecution should allow a opy of all of such minutes to be read to the ury. There can be no doubt of their right o know all that the stenographic minutes ontained upon this subject, if they were used o refresh witness' memory; but it was not nquired after; neither is there anything to how that they contained anything incon-istent with the statements made by the vriter.

ground for the reversal of the case.

The conviction is affirmed. The other Justices concurred.

HOLLIDAY v. WRIGHT.

(Supreme Court of Michigan. Oct. 27, 1903.)

CORPORATIONS—RECOVERY OF SUBSCRIPTION—AGREEMENT WITH PROMOTER.

1. Where a subscriber to the stock of a corporation tenders back his stock and demands repayment, pursuant to an agreement with a promoter of the corporation, it is no defense to an action for the money paid on his subscription that he had not complied with his contract in paying for his stock as assessments were made, when the corporation, if time was of the essence of the contract, has waived the provision by accepting payment after the delay.

Error to Circuit Court, Wayne County; George S. Hosmer, Judge.

Action by William P. Holliday against Charles Wright. Judgment for plaintiff, and defendant brings error. Affirmed.

Defendant was the owner of certain trade-marks, copyrights, and good will of the business of the sale of certain dentifrice articles, and sought to organize a corporation for the purpose of manufacturing and selling such articles on a large scale, and building up a business by means of extensive advertising. Accordingly, on January 9, 1900, a subscription list for the stock was opened; the company to be styled "The Charles Wright Chemical Company," with a capital of $150,000. Several parties subscribed for the stock. Plaintiff was requested by the defendant to subscribe, and did so, on April 2, 1900, under the following agreement:

"That, whereas, The Charles Wright Chemical Company was to be organized for the prosecution of a dentifrice business, with capital stock of $150,000, Wright [defendant] to receive $100,000 for trade-marks, copyrights and good will, the remaining $50,000 to be sold at par, defendant to transfer to each purchaser an equal amount of stock, to be issued to him for the trade-marks, etc. Therefore, it is mutually agreed between the parties hereto, that, in consideration of the subscription of $5,000 cash to be paid by said party of the second part [plaintiff] to said Charles Wright Chemical Company for stock therein to said amount, the said party of the first part [defendant], on payment by said second party of his subscription which he agrees to make to said capital stock of said proposed Charles Wright Chemical Company, said party of the first part agrees to transfer to said second party $7,000 worth of the stock of said Charles Wright Chemical Company, which he is to receive in payment for said trade-marks, copyrights and good will; said $2,000 of extra stock of said Charles Wright Chemical Co. is to be trans-

Digitized by Google

said second party's present relations to said Charles Wright Chemical Co. business.

"It is also mutually agreed that within one year after the organization of said Charles Wright Chemical Co., and issuance of said $12,000 worth of stock therein to said second party, and payment therefor by the latter of the $5,000 subscription aforesaid, said second party shall have the option to surrender said $12,000 worth of stock to said first party, who within six months from notice of said election shall repay to said second party the amount paid therefor, to wit: $5,000."

Defendant, upon execution of the contract, transferred to plaintiff 500 shares of stock in the Charles Wright Chemical Company, as security for the performance of the contract on his part.

The contract of subscription was as follows:

"The undersigned desire to form a corporation to be organized under the manufacturing and incorporation laws, being Act 232 of the Public Acts of Michigan of 1885, as amended, with a capital stock of $150,000, to be called the Charles Wright Chemical Company, for the purpose of carrying on in Detroit and elsewhere the business of manufacturing and dealing in dentifrices, and to that end hereby agree, each in consideration of the agreements of the others, to join in the organization, and to subscribe for and take stock in such a corporation to the amounts, par value, set after our respective names. All details of said organization other than the foregoing, may be determined by a majority in interest of the signers hereof."

The articles of association were executed April 18th, plaintiff being one of those who executed and acknowledged them. On the same date a stockholders' meeting was held, and plaintiff was elected a director. The directors were authorized to call in the subscriptions as the amounts should be needed. On April 20th the directors made a call for 25 per cent. Plaintiff did not pay, but on June 11th following wrote defendant that he would take advantage of the above agreement between them, and advising that he get some one to take his place. Other correspondence passed between them, plaintiff apparently being under the impression that he could take advantage of the agreement without the payments therein provided. The corporation brought suit against the plaintiff for the assessments made upon his stock. He then paid the full amount, with interest and costs of suit, and defendant transferred to him the other stock provided in the contract. Before the expiration of the year, plaintiff tendered back his stock and demanded repayment of the $5,000, in accordance with the agreement. Defendant refused to pay, and thereupon plaintiff instituted this suit. At the close of the testimony the court, at the request of the plaintiff, directed and interest.

George W. Radford, for appellant. Dwight C. Rexford, for appellee.

GRANT, J. (after stating the facts). The defense is that time was of the essence of the contract between plaintiff and defendant; that plaintiff did not comply with his contract in paying for his stock as the assessments were made, and cannot, therefore, maintain suit. The corporation had no interest in the contract between plaintiff and defendant. In contracts of subscription for the stock of corporations, time is not of the essence thereof, unless it is expressly provided or necessarily implied. If, however, time was of the essence of this contract, the corporation waived that feature of it by accepting payment of the full amount after the delay. Malone v. Gates, 87 Mich. 332, 49 N. W. 638; Foster v. Worthington, 58 Vt. 65, 4 Atl. 565; Nibbe v. Brauhn, 24 Ill. 208; Phillips, etc., Co. v. Seymour, 91 U. S. 646, 23 L. Ed. 341. If any damages accrued by plaintiff's failure to comply with his subscription contract, the corporation alone suffered them. Individually, the defendant was not injured thereby, but only in the capacity of a stockholder, if injured at all.

The court was correct in directing a verdict, and the judgment is affirmed. The other Justices concurred.

OHRNS v. WOODWARD.

(Supreme Court of Michigan. Oct. 27, 1903.)

TESTAMENTARY GUARDIAN—APPOINTMENT—RATIFICATION—DISCRETION OF COURT—OBJECTION BY WIDOW—WAIVER.

1. Under 3 Comp. Laws, § 8706, providing that a father may by will appoint a guardian for his children, but that, when the mother survives, such appointment shall not be operative until approved by the judge of probate after opportunity offered to the mother to show cause in opposition thereto, the mother did not lose her right to make such opposition by consenting to the probate of the will.

2. The statute confers discretionary powers on the judge of probate, and his decision will not be reviewed except for abuse of discretion.

3. The refusal of the judge of probate to ratify the appointment as testamentary guardian of an executor was not an abuse of the discretion conferred by the statute, where it appeared that the widow and executrix, who was also named as guardian in the will, could not agree with the executor, and that the two were mistrustful of each other.

Certiorari to Circuit Court, Wayne County: George S. Hosmer, Judge.

Application by Henry Ohrns, testamentary guardian and trustee under the will of Mills D. Woodward, deceased, for appointment by the probate court as testamentary guardian of Etta and Rosa Woodward, and from an order denying the application he appeals. Affirmed.

One Mills D. Woodward died testate April 5, 1899. Appellant, Ohrns, was his executor,

Digitized by Google

arose between Mr. Ohrns, the executor, and the widow in regard to her right to take her share under the statute or under the will. An appeal from the probate of the will by the probate court was taken to the circuit court. While the suit was pending there the differences were amicably settled by agreement. Mrs. Woodward was allowed to take under the statute, and the probate of the will was affirmed. Subsequently Mr. Ohrns applied to the probate court to be appointed testamentary guardian. A hearing was had before the judge of probate, and his petition denied. Thereupon he appealed to the circuit court, and the decision of the probate court was affirmed. He thereupon appealed to this court.

James H. Pound, for appellant. Dohany & Dohany, for appellee.

GRANT, J. The statute provides that every father may by his will appoint a guardian or guardians for his children. The statute contains a proviso that, when the mother of such children shall survive the father, the appointment of such guardian shall not be operative until approved by the judge of probate, and after opportunity offered to the mother to show cause in opposition thereto. 3 Comp. Laws, § 8706. The widow appeared and objected. A hearing was had, proofs taken, and the issue held by both the probate and circuit courts against the appellant's contention. His reasons for asking a reversal of the judgment appear to be (1) that, by her consent to the probate of the will after her appeal, she lost her right to object under the statute; (2) that the reasons shown were not sufficient for nonapproval by the probate court; (3) that the widow, who has had the main charge of the estate, has run it in debt, and that she is responsible for that indebtedness.

The widow did not waive her right to object to the approval of Mr. Ohrns' appointment by her consent to the probate of the will. The statute contemplates a subsequent proceeding after the probate of the will, in which the widow, the mother of the children, may appear and oppose the appointment. The reason given by the circuit judge for his conclusion is that serious questions had arisen between Mrs. Woodward and Mr. Ohrns, and that there was a mutual distrust each of the other. He held that this was a sufficient reason to set aside the testamentary appointment. The statute confers original jurisdiction in this matter upon the probate judge. It requires his approval before the testamentary appointment can become operative. Only when there is a clear abuse of his power will an appellate court interfere. Whether he may act arbitrarily, we need not determine. It was apparent to the probate trustful each of the other. In this we concur. We think the facts and circumstances justified the action of the lower courts.

The judgment is affirmed. The other Justices concurred.

BROWN v. SWARTHOUT et al.

(Supreme Court of Michigan. Oct. 27, 1903.)

SPECIFIC PERFORMANCE—INDEFINITE CONTRACT.

1. A contract by the owners of patents with plaintiff that, if he interests capital to form a company to manufacture and market the invention, they will contribute their patents to the company, they to receive one-fourth of the stock for their interest, and the balance to go to the promoters to procure capital, is too indefinite to be specifically enforced; no company being organized, there being no provision for determining how much capital stock shall be required, and such owners refusing to submit the question to one to determine the amount thereof by tests.

Appeal from Circuit Court, Wayne County, in Chancery; Morse Rohnert, Judge.

Suit by Henry N. Brown against George M. Swarthout and others. Decree for defendants, and complainant appeals. Affirmed.

Robert M. Brownson, for appellant. Parker & Burton and Elliott J. Stoddard, for appellees.

MONTGOMERY, J. This is a bill filed to enforce the specific performance of a contract, which, after reciting that defendants Swarthout & Stein are the owners of patents for generating gas from oil and water, proceeds as follows: "And whereas, said Swarthout & Stein are wishing to interest capital to manufacture and put on the market the above-named inventions and appliances. In order to do so the above-named parties of the first part agree with Henry N. Brown, of Detroit, Michigan, party of the second part, that if the said party of the second part interest capital to form a company to manufacture and market said invention and appliances, they, the said parties of the first part, will contribute all their inventions now made, together with all improvements that may hereafter be made, and for their part in said company to be formed, will assign to said company above patents and improvements that may be made. Said interest in said projected company to be one-fourth of the entire capital of said company, the said one-fourth to be paid-up capital, and to be divided between said Swarthout & Stein as they themselves may direct. The balance of stock of said projected company is to go to the promoters of said company herewith represented by Henry N. Brown, party of the second part, for the purpose of procuring capital to make said appliances and market

Digitized by Google

This agreement shall hold good for six months from date, and if experiment plants made and put in are not good or have no value, and no permanent company is formed, then at the end of the above six months this agreement is null and void. When money is available to erect experimental plants, said Swarthout & Stein shall have first employment, and shall have direction of making and setting up said plants at $2.00 per day and traveling expenses, both if needed; if only one at first, then that one to be Swarthout. The remuneration of $2.00 is only to apply during experimental period. After the experiments are proved successful, then company is to be formed with sufficient capital to carry on the business. Amount of capital to be determined as soon as successful experiments are made and successful plants in operation." The bill then avers that complainant interested three other parties, William S. Vreeland, George S. Wallace, and George E. Kerwin, who, together with complainant, agreed to contribute such an amount of money as would be necessary to erect an experimental plant and defray the expenses of incorporating the projected company. That immediately thereafter complainant notified defendants Swarthout & Stein that he had interested the capital necessary to do the experimental work and organize the proposed company, and requested Swarthout to come to Detroit and begin the erection of the experimental work; that Swarthout, on one pretext or another, neglected to carry out his part of the contract until the 1st of May, 1902, when he came to Detroit; that it was not until the 9th of May that he began the erection of the experimental plant; and that he continued to carry on said work until May 31st. The bill further alleges that complainant carried out his part of the terms of said contract with Swarthout and Stein; that he paid Swarthout the salary agreed upon, and furnished him with the materials, tools, and appliances he needed or asked for; that prior to June 1st he had interested sufficient capital to form a stock company to manufacture and market said hydrocarbon burners; that on May 31st he arranged with one Prof. Charles L. Weill to make certain experimental tests, the results of which tests were to determine the amount of capital stock of said projected company, yet the said Swarthout refused to proceed with said tests, and also refused to further carry out his part of the contract. The bill further charges that Swarthout, in defiance of complainant's rights, sold and assigned, or is about to sell and assign, the patents to George E. Kerwin, the defendant. The bill prays a specific performance. To this bill a demurrer was filed, and from a decree sustaining the demurrer complainant appeals.

We think but one question need be discussed. The contract, in its inception, was not only not mutual, but it was too uncertain in its terms to justify a decree of specific performance. While it may be true, as claimed by complainant's counsel, that a contract which in its inception is not mutual may be enforced where the party having the option to proceed with the contract has performed on his part, so that a specific performance upon agreed terms may be decreed, such is not this case. Here it is assumed that the experimental work was undertaken to make a test for the purpose of ascertaining how much capital stock should be required for the company. Who is to determine this question? Certainly no court can say, and whose judgment is to prevail? The business might be conducted upon a small scale or a large scale. The contract contains no provisions for this, nor for the employment of an expert to ascertain and determine the proper amount of capital stock. Up to this time no corporation has been formed; no stock is provided or within the reach of the defendants. The complainant is not, by the terms of this contract, entitled to any portion of the capital stock, except what he pays for. The agreement is that, after one-fourth of the capital stock is divided between Swarthout and Stein, the balance of the stock is to go to the promoters of said company represented by complainant, Brown, for the purpose of procuring capital to make said appliances and market them. Brown would not become the owner of this stock. It would have to be converted into money to be used for the purposes of the business. We think the bill is defective, in that it fails to show that a company was organized. It is true, it asserts that complainant had interested sufficient capital to form a stock company, but in the next sentence it asserts a default in defendant for failing to make a test for ascertaining how much capital should be required to form a stock company. These two statements are hardly consistent. The fault with the contract is that it made no provision for determining how much capital stock should be required, and defendants cannot be said to be in default for refusing to arrange to submit that question to Prof. Weill—a contract that in its terms is too indefinite and uncertain to be susceptible of specific performance.

The decree will be affirmed, with costs. The other Justices concurred.

In re HULETT'S ESTATE.

STATE v. KILER.

(Supreme Court of Iowa. Oct. 20, 1903.)

INHERITANCE TAXES—PERSONS LIABLE—PREDECEASED DEVISEES—DESCENDANTS.

1. Code, § 1467, subjects to an inheritance tax all property passing by will or by statute of inheritance to any person other than to the father, mother, etc., or lineal descendants. Section 3281 provides that, if the devisee die before the testator, his heirs shall inherit the property devised to him, unless from the will

Digitized by Google

er of testator. *Held*, that the property devised assed directly from testator to his brother and ister, and was subject to the collateral inherit- nce tax.

Appeal from District Court, Montgomery ounty; O. D. Wheeler, Judge.

Proceedings to compel the payment of a ollateral inheritance tax, under Code, § 1467, pon certain real estate situated in Mont- omery county. The lower court held the roperty to be subject to the payment of he tax, and the administrator of the estate f the deceased owner appeals. Affirmed.

C. E. Richards and P. W. Richards, for ppellant. Chas. W. Mullan, Atty. Gen., for ppellee.

McCLAIN, J. In 1895, Sarah J. Hulett and Villiam M. Hulett, her son, executed wills, ach devising all of his or her property to he other. Sarah J. Hulett died in February, 901, seised of the property in question in his case. William M. Hulett died in May f the same year, possessed, therefore, by he devise from his mother, of the fee-simple itle to such property. Charles E. F. Hulett nd Alma Johnson are the only children of Sarah J. Hulett surviving the death of the on William M. Hulett. Under the provision f Code, § 3281, that "if the devisee die be- ore the testator, his heirs shall inherit the roperty devised to him, unless from the erms of the will a contrary intent is mani- est," the real property in question passed rom William M. Hulett, on his death, to his rother and sister, who took as heirs of the nother, the deceased devisee under the will f William M. Hulett. It is provided by Code, § 1467, that "all property within the urisdiction of this state, and any interest herein, whether belonging to inhabitants of his state or not, and whether tangible or ntangible, which shall pass by will or by he statutes of inheritance of this or any ther state * * * to any person, in trust r otherwise, other than to or for the use f the father, mother, husband, wife, lineal lescendants, * * * shall be subject to a ax of five per centum of its value above the um of one thousand dollars, after the pay- nent of all debts, for the use of the state." The precise question raised in the lower ourt, and now presented here, is whether he real estate in question passed directly rom William M. Hulett to his brother and ister, and therefore to collateral heirs, and s subject to the inheritance tax, or whether t is to be considered as having passed from he mother of William M. Hulett, devisee un- ler his will, deceased before his death, to uch persons as her descendants, and there- fore, under the language of the statute, ex- empt from the inheritance tax.

The solution of this question depends upon a construction of Code, § 3281, above quoted. to change the common law as to construction of wills, by which a devise to one who was deceased at the time of the death of the testator was regarded as lapsing and be- coming ineffectual, so as to preserve the de- vise to a greater or less extent for the benefit of persons who would presumably have en- joyed the benefits of such devise had the devisee survived the death of the testator and died immediately afterward. The lan- guage of the various statutes, however, has not been uniform as to the persons who shall enjoy the benefits of the devise. In England the provision is that, if a devise is made to a child of testator, who dies before the death of such testator, leaving issue surviving at the time of the death of such devisee, the devise shall not lapse, but take effect as if the death of such person had happened im- mediately after the death of the testator. In re Scott, Deceased [1900] 1 Q. B. D. 372; Johnson v. Johnson, 3 Hare, 157. And the New Jersey statute seems to be similar. Denise's Ex'rs v. Denise, 37 N. J. Eq. 163. But it is to be noticed that our statute is framed in different language. The devised property does not go to the children of the predeceased devisee as though he had sur- vived the testator, but his heirs inherit it. This change of statutory form avoids many difficulties which have arisen in England and in other states with reference to the dispo- sition of a devise to a predeceased devisee, and, as we think, makes the disposition of the property analogous to that provided for by Code, §§ 3378, 3381, with reference to in- heritance by right of representation. Under those sections real estate descends in equal shares to decedents' children, unless one or more of them is dead, in which case the heirs of a child who is dead inherit his share as though such child had outlived the de- ceased; and, if no descendants survive, and the parents also are deceased, who would have taken in the absence of children of de- ceased had such parents survived the de- ceased, the portion which would have fallen to the parents is to be disposed of in the same manner as if the parents had outlived the intestate and died in the possession and ownership of the portion thus falling to their share. Under these sections it has been held that, although, for the purpose of deter- mining the descent of property, a deceased child, or a deceased parent, in case there are no descendants, is to be regarded as having survived the decedent, nevertheless the prop- erty passes directly from the decedent to the persons who are determined to be his heirs by the application of these rules, and that the heirs thus taking do not take through the deceased person who is thus assumed to have survived for the purpose of determining their relationship. Lash v. Lash, 57 Iowa, 88, 10 N. W. 302; Leonard v. Lining, 57 Iowa, 648,

Digitized by Google

plaintiff in a reason-

tion for premium paid on insur-
, predicated on the agent's fraud in con-
nection with the application, an instruction di-
recting the jury's attention to the agent's retak-
ing possession of the policies, his subsequent
delivery to the general agent, who, before the
policies were redelivered, had plaintiff re-exam-
ined, and stating that, before defendant would
be liable for the premiums paid, plaintiff must
show that defendant, during the time the pol-
icies were not in possession of plaintiff after the
first delivery to him, did some act indicating that
delivered to him, and before they were re-
it did not consider the policies to be in force,
and if during that time the defendant did treat
the policies as not in force, then plaintiff could
treat them as not being in force, and could re-
cover the premium—is erroneous, as it ignores
the issue of fraud in securing the application.
3. There being no evidence showing a purpose
f defendant to treat the policies as not in force,
e instruction was erroneous, as not supported
the evidence.
4. The instruction, if intended to present the
oposition that the requirement of a further ex-
mination was indicative of a purpose of de-
ndant to bring about a cancellation of the
licies, was too vaguely expressed.
5. In an action for premiums paid on insur-
ce predicated on fraud in procuring the appli-
tion, an instruction that the policies were not
force unless, after being issued, they were
livered to plaintiff within a reasonable time,
erroneous, as the action was not founded on
lure to make delivery in a reasonable time.
6. In an action for premium paid on a policy,
ich it was claimed was not delivered, an in-
uction entitling plaintiff to recover if the pol-
was not delivered in a reasonable time after
application was made, and he did not accept
policy tendered, is erroneous, as not war-
ted by the issues presented.
. The depositing of a policy by an insurer
the post office, properly addressed to the in-
ance applicant with postage prepaid, is a
d delivery of the policy.

Appeal from District Court, Benton Coun-
G. W. Burnham, Judge.

t appears that in August, 1895, one W. D.
mbo was employed and acting as an agent
the defendant company to solicit appli-
ons for life insurance, and that his au-
rity was limited to such purpose. During
month named he secured an application
n the plaintiff, which, in form, called for
issuance of a life insurance policy for
00 on the so-called "income life plan,"
10-year distribution. At the time of
ing such application plaintiff executed
delivered to said Rambo a note for the
of $80.25 in payment of the first pre-
n to be due on the policy thus applied
and the said Rambo gave a written re-
in which payment of said sum for in-
ce in the defendant company was ac-
ledged. At about the same time the
Rambo secured from the wife of plain-
a application for insurance on her life,
application in form called for the issu-
of a policy for $2,500 on the so-called
ne life plan" with 20-year distribution.
e time thereof this plaintiff executed
elivered to said Rambo his note for the
f $127.50 in payment of the first pre-

ee Insurance, vol. 28, Cent. Dig. §§ 220, 226.

mium to be due on the policy thus applie
for by his wife, and the said Rambo gave t
him a written receipt for said sum in form
similar to that given him in connection with
his own application. At about the same time
said Rambo secured from W. J. Armstrong,
brother of plaintiff, an application, which in
form called for the issuance of a policy on
his life for the sum of $5,000 on the same
plan as that mentioned in the application
made by plaintiff. Said W. J. Armstrong ex-
ecuted and delivered to said Rambo his note
for $115 in payment of the first premium to
be due on the policy thus applied for, and
the said Rambo gave to him a receipt for said
sum in form similar to those given to plain-
tiff as above stated. The three applications
were forwarded by Rambo to Fleming Bros.,
general agents of the defendant company at
Des Moines, and the same were by them for-
warded to the home office of the company in
New York. The applications were accepted,
and in due time policies, such as were called
for, were issued, and returned to Fleming
Bros., who sent them to Rambo for delivery,
and the latter made delivery thereof to plain-
tiff and his wife. Upon receiving the policies,
plaintiff and his wife read them over, and
then put them away for safe-keeping. About
10 days thereafter Rambo called upon plain-
tiff, and requested that the policies be given
to him, saying that a mistake had been made
in them, and that Fleming Bros. had sent
him to get them that such mistake might
be corrected. The policies were thereupon
delivered to him in compliance with such re-
quest. It appears that Rambo had gotten
into difficulty with Fleming Bros., his imme-
diate employers, growing out of his misap-
propriation of money, and in the shadow of
such impending trouble he had gone to plain-
tiff upon his own motion, and procured the
policies to be thus delivered to him. His sole
purpose in so doing was to use them in some
way, if possible, in adjusting the trouble with
his employers. After the lapse of some time
he delivered the policies to one of the Flem-
ing brothers, and this without any qualifica-
tion or explanation, as far as shown by the
record. Fleming, in ignorance of the cir-
cumstances under which Rambo had secured
possession of the policies, and without know-
ing that the premiums thereon had been paid,
sent out a physician, who made a medical
examination of plaintiff and his wife, and se-
cured from them a signed certificate of
health. No explanation was made by the
physician, and the examination was submit-
ted to and the certificate given without ques-
tion or objection. Immediately thereafter the
policies were returned to plaintiff. As affect-
ing plaintiff or his wife, no other act was
done or requirement made by defendant or
its agents. In this connection it may be add-
ed that no officer or agent of the defendant
had any knowledge, prior to the time of the
commencement of this action, of any claim
on the part of plaintiff or his wife to the

Digitized by Google

Rambo in connection with the filing up of their respective applications. Upon receiving the policies for the second time, and finding the same to be the policies originally issued, and unchanged, plaintiff sent them back to Fleming Bros. without explanation. As to none of the foregoing facts, as we have stated them, is there any substantial dispute in the record.

This action is brought by plaintiff on his own behalf and as assignee of his wife and brother to recover the amount of the several notes given to Rambo as above stated. In the first count of the petition it is contended by plaintiff that the policy in fact applied for by him was a 10-year endowment, and that the policy applied for by his wife was a 20-year endowment; that Rambo fraudulently wrote the applications and procured them to be signed as they now appear. They say that they were unable to read the handwriting of Rambo, and that the fraud consisted in his reading the applications to them as though calling for endowment policies, when in fact policies differing in character and value were called for. It is alleged that such fraud was not discovered at the time the policies were delivered to them. The facts in reference to the subsequent taking up of the policies by Rambo are then alleged, and in connection therewith it is said that such policies were retained for a period of about five months; that during that period the policies were under control of defendant, and not in force; that in January, 1896, defendant attempted to place said policies in force by sending a physician to examine them and procure a certificate of health; that the policies were then returned to them, but without the changes having been made therein to make the same conform to the agreement had between them and said Rambo, and that defendant has refused and neglected to make such correction. In the second count of the petition the facts in relation to the application of W. J. Armstrong are set forth, and it is alleged that no policy was ever delivered to him. Judgment in the gross sum of $405.62 is demanded, with interest. The answer is a general denial. The further facts, as far as material, will be noticed in the opinion. Trial was had to a jury, and there was a verdict and judgment in favor of plaintiff for the sum of $284.57. The defendant appeals. Reversed.

Jamison & Smyth, for appellant. Heins & Heins and C. W. Meek, for appellee.

BISHOP, C. J. The evidence offered by plaintiff having relation to the subsequent taking up by Rambo of the policies issued to plaintiff and his wife was admitted over the objection of defendant that the same was incompetent and immaterial. Counsel for appellant contend that such ruling was error. The action, it is to be observed, is grounded upon the fraud alleged to have been committed in the issuance of the applications. As the issues stand, the right of recovery must be predicated upon proof of the fraud alleged, and upon the fact that within a reasonable time after the discovery of such fraud the policies were returned, or offered to be returned, to the defendant. Clearly, a party making application for life insurance is not bound to accept a policy differing in form and provisions from that which he had the right to believe and did believe he was to get. And if by fraud in character such as that the law will take notice of and grant relief against he is induced to accept into his possession such different policy, he is not bound to retain the same and pay premiums thereon. But he must return or offer to return the policy within a reasonable time, and whether he has done so or not is generally a question of fact for the jury. In this connection, at least, the evidence objected to was material. Rambo was, or had been, the agent of the company. He had procured the policies to be delivered to him upon the representation that a mistake had been made in writing the same, and that he was acting in the premises on the request of Fleming Bros., general agents. Taking the record as it stood at the time, the court might fairly infer that the plaintiff was seeking to prove an actual return of the policies to defendant, and that the evidence offered was but a step in that direction. From the viewpoint of the offer and the ruling, we cannot say that the evidence was inadmissible.

2. Appellant makes complaint of the giving of the tenth instruction. Therein the attention of the jury is called to the facts connected with the retaking of possession by Rambo of the policies, and his subsequent delivery thereof to Fleming Bros., and that before such policies were again delivered to plaintiff the defendant caused plaintiff and his wife to be re-examined by a physician. The instruction then proceeds: "You are instructed that the defendant, under the undisputed evidence in this case, had no right to make such requirements of plaintiff and his wife. Yet you are further instructed that if you find from the evidence that the plaintiff and his wife voluntarily and without objection, with a full knowledge of all the facts as to what the written application theretofore signed by them contained, consented and agreed to the further examination, and signed the certificate in evidence before you of date January 7, 1896, then these facts, taken alone, would not make the defendant liable herein; but, before the defendant would be liable to plaintiff for the premiums paid upon these two policies, upon the facts stated in this instruction, he must go further, and show by the evidence that the defendant, at some time during the time the said policies were not in possession of plaintiff after the first delivery to him and before they were redelivered to plaintiff, after January 7, 1896, if

Digitized by Google

luring said time the defendant did treat said policies as not being in force, then plaintiff would have the right to treat said policies as not being in force, and would have the right to recover back the premiums paid therefor, provided he exercised such right within a reasonable time." The thought of the instruction does not readily present itself. Indeed, we are not even now sure that we have arrived at a correct interpretation. The contract of insurance is not included in the record, but we may concede that the trial court, with such contract before it, correctly determined that defendant had no right to require a medical re-examination of the plaintiff and his wife. So, too, it may be said that the court was right in saying that the fact that plaintiff and his wife may have voluntarily and without objection submitted to such examination, having at the time full knowledge of all the facts stated in the original applications signed by them, would not, taken alone, give plaintiff the right to recover back the premiums paid by him. We are unable, however, to find trace of any line of connection between the propositions thus stated and what is thereafter said in the instruction. Conceding that at some time while the policies were in its possession the defendant did some act indicating that it did not consider the same in force, or, indeed, that it actually treated the policies as not being in force, still we are unable to see how any right of plaintiff involved therein could be affected by the fact that a medical re-examination had been brought about by defendant, which was acquiesced in by plaintiff. Nor do we perceive how such conduct on the part of defendant with respect to the policies, taken in combination with the conclusive propositions previously stated in the instruction, could give rise to a right on the part of plaintiff to treat the policies as not in force, and to maintain an action to recover back the total premiums paid. As we think, the most that could be said under any circumstances would be that the requirement of a further examination was indicative of a purpose on the part of defendant to bring about a cancellation of the policies. If this was the thought of the trial court, and conceding the proposition to be involved in the case, it was too vaguely expressed to be readily understood by the jury. Directing attention now to the proposition last stated in the instruction, it is to be said, in the first place, that there is no competent evidence in the record tending to show a purpose on the part of the defendant to treat the policies as not in force. As we have said, the only act done was to call for a further medical examination. In connection therewith, Fleming now testifies that the reason for his action was that he mistakenly supposed at the time that the premiums on the policies had not

change in any way the legal status of the parties. It may be that the thought intended to be expressed in the instruction was that if defendant, having regained possession of the policies, and having given out some expression or done some act indicative of its purpose to permanently withhold such policies, this would amount to a declaration of rescission or cancellation on its part, in which the plaintiff might acquiesce, and at once bring his action to recover back the premiums paid. As we have seen, the primary trouble with this view of the case is that the record is barren of evidence upon which to rest the proposition. But were this not so, we think it must be said, in any event, that the position taken has no merit considered as a matter of law. We have no question but that the parties to an insurance contract may by appropriate words, or by conduct clearly indicating such intention, agree upon a rescission or cancellation of their contract, and this without reference to whether such contract remains in an executory stage, or, on the other hand, had been previously put in full force as to both the parties thereto. That the policies here in question had been put in force cannot be doubted. Delivery had been made thereof, and the premiums paid. There was nothing further to do save to pay the future premiums to become due by the one party and to pay the value of the policies at maturity by the other party. It will be understood, of course, that in this immediate connection we are leaving out of consideration the fraud issue presented by the pleadings.

Now, as a matter of course, mutuality is an essential element in a voluntary contract rescission; such a rescission as would restore the parties to their original status. The parties, by express words, or by conduct clearly indicative of such intention and purpose, must agree upon the fact and the conditions of the rescission. Johnson v. Reed, 9 Mass. 78, 4 Am. Dec. 36; Burton v. Shotwell, 76 Ky. 271; Vawter v. Griffin, 40 Ind. 593. Manifestly, the record before us presents no fact or conditions to which the doctrine of contract rescission can be made applicable. Here possession of the policies was obtained from plaintiff by false pretense, and without right or authority. In the course of time the tortious holder gave over possession thereof into the hands of the general agent of the defendant company, who, having first satisfied himself that plaintiff and his wife continued in good health, thereupon again delivered the policies to plaintiff. Most certainly a voluntary agreement to rescind could not be predicated upon such a state of facts. But, suppose that the defendant company had manifested an intention to treat the policies in question as not in force, or, going to extreme lengths, had in an unequivocal way declared such policies to be without further force and void. What, then, could be said of the rights of plaintiffs? Cl

Digitized by Google

only, would be open to him. He might sue for a return of his policy, or, on the other hand, he might treat the policy as canceled by the act of the defendant, and sue for the amount of the unearned premiums paid by him. A bare reading will suffice to show that to neither of such cases could the instruction here given be made applicable.

A further and fundamental error of the instruction arises out of the fact that thereby the issues in the case are wholly ignored. Reduced to a sentence, the instruction tells the jury that upon finding the facts in reference to the medical examination to be as stated, and finding as a further fact that defendant, while the policies were in its possession, did some act manifesting an intention to treat the same as not in force, these will be sufficient upon which to found a verdict in favor of plaintiff. Such, at least, is the effect of the language used, and the jury could hardly fail to so understand. Now, the case made by the pleadings is one based upon fraud. The gist of the action is the alleged tortious conduct of Rambo in securing the applications in the form in which they now appear. Plaintiff is not here contending that he is entitled to recover because the policy contracts have been rescinded by mutual consent, or canceled by the arbitrary action of the defendant. True, the subsequent taking possession of the policies by Rambo, and the delivery of the same by him to the general agents of defendant, is pleaded, but the burden of plaintiff's complaint in that connection is that the defendant sought to make return of the policies without having made any attempt to correct the same, or change them to conform to the original agreement, which they allege was made by them with Rambo. Moreover, the action being thus grounded on fraud, it was necessary to plead a return or offer to return of the policies upon discovery of the fraud, and this, we think, must have been the intent of the pleader in setting forth in the petition the facts in relation to the subsequent conduct of the agents of the defendant. The averment in the petition to the effect that the insurance was not in force while the policies were in the possession of Rambo and of Fleming Bros. is the statement of a conclusion merely, and does not, in any sense, control the issue tendered. Such averment may be disregarded for the further reason that the conclusion sought to be drawn has no support in the evidence produced upon the trial. That instructions to a jury must be confined to and in line with the issues made by the parties is a well-settled rule of practice. Our previous cases furnish many illustrations of the application thereof, and they are too familiar to require citation.

3. Complaint is also made of the giving of instructions numbered 11 and 12. We need not lengthen this opinion by setting out such instructions. In each thereof some language is used which involves error. With one exception, however, we think the ground is fully ing division of this opinion. In the twelfth instruction, after making reference to the fraud issue, it is then said that the policies would not be in force unless the jury "find that, after being issued, they were delivered to plaintiff within a reasonable time; for, while delivery was not essential to make a binding contract for insurance, yet the plaintiff and his wife had a right to the possession of the policies within a reasonable time after they had been issued, and would not be bound to accept the insurance unless the said policies were delivered to them within a reasonable time after they had been issued." We are not disposed to question the soundness of the abstract proposition of law thus stated. But we think the instruction involves error as applied to the case made in the first count of the petition, to which, by express terms, it was intended to apply. In no sense is plaintiff's case grounded upon a failure to make delivery of the policies within a reasonable time, and no such issue is tendered. But, even were this not so, the instruction in its present form should not have been given. It is not clear whether the delivery to which reference is made is the first or the second. It may have been intended that the instruction should apply to both of such deliveries. Now, the first delivery was made within a few days after the applications were taken. There is not a suggestion in the evidence that such delivery was not prompt and timely. As to the second delivery, it is sufficient to say that without dispute the plaintiff surrendered the policies into the hands of an unauthorized person. From the hands of such person the policies reached the hands of the general agents of the defendant, by whom they were shortly afterwards returned to plaintiff. There is nothing to indicate any unreasonable delay on the part of such general agents, and, if there was, it may be doubted if plaintiff could be heard to complain until he had made some request or demand for a return. It follows that there were no facts present to warrant the giving of such instruction.

4. It will be observed that the issue tendered in the second count of the petition is predicated upon the allegation that there was an entire failure on the part of the defendant company to deliver a policy as applied for, and in payment of which the note of W. J. Armstrong was given. Counsel for appellant does not question the right of plaintiff to recover upon proof of the matter alleged in said count. But it appears in connection with the evidence offered by plaintiff in chief—and this without dispute—that a policy such as was called for by the application of said W. J. Armstrong was issued by the defendant company, and that the same was forwarded to him by mail, and that the package was actually delivered to him by the local postmaster. He says that the policy was handed to him, but that he never opened it, and told the postmaster to send it back. At the close of plain-

Digitized by Google

vithout dispute shown by the evidence. This notion was overruled, and the court submitted his branch of the case to the jury upon two nstructions. In the thirteenth instruction it s said that the depositing of the policy by the lefendant in the post office, properly address-d to the insurance applicant, with postage prepaid, would constitute a good delivery of uch policy. Such is undoubtedly the law. 1 May on Insurance (4th Ed.) § 55, and cases ited in note. In the fourteenth instruction it s said: "As to the second count of plaintiff's petition, you are instructed that if you believe rom the evidence that the defendant did not leliver to the said W. J. Armstrong any policy f insurance contracted for by him within a easonable time after his application for insurance had been made and forwarded to said ompany, then the said W. J. Armstrong was ot bound to accept a policy of insurance tenlered to him after a reasonable time elapsed; nd, if you further find that he did not accept ny policy tendered to him after such time, hen the plaintiff would be entitled to recover pon this branch of the case." We agree with ounsel for appellant that the latter instruction vas wholly foreign to the issues presented by he pleadings, and for that reason, if for no ther, should not have been given. So, too, we hink the motion to direct a verdict should ave been sustained. A failure to deliver was he only matter complained of, and the record hows affirmatively that a delivery was in fact nade. The subject of an unreasonable delay n making delivery is nowhere suggested in he record until the fourteenth instruction is eached. Something is said in argument conerning the disposition of the policy after it vas refused by Armstrong. We cannot see ow it is material to consider what disposition e made of the policy after receiving it. Cerainly he could not clothe himself with the ight to recover back the premiums he had aid by destroying the policy, by giving it back o the post-office authorities, or by making any ther voluntary disposition of the same.

Other assignments of error need not be noiced. Where the complaint may be said o e well-founded, the error is either made clear y what we have already said, or it is of such haracter that it is not likely to arise upon anther trial. For the errors pointed out, the udgment is reversed, and remanded for furher proceedings according to law.

Reversed.

CHLICHTING v. CHICAGO, R. I. & P. RY. CO.

(Supreme Court of Iowa. Oct. 23, 1903.)

ARRIAGE OF GOODS—CONNECTING CARRIER—DELIVERY—BILLS OF LADING—ESTOPPEL.

1. A shipper of goods, who informed the conecting carrier that he held bills of lading for he goods, was estopped from disputing the fact. other evidences of ownership issued to the consignor.

3. A shipper of goods telegraphed to the connecting carrier that he held the bills of lading, and that no delivery should be made until bills of lading were surrendered. The carrier thereupon refused to deliver the goods. Subsequently the shipper wrote a letter, addressed to the connecting carrier, recalling the order in the telegram, and directing a delivery without the bills of lading. The consignee presented the letter to the carrier at its office at the place of destination, but the carrier refused to deliver because the bills of lading were not produced, but delivered them on production of the freight receipts. *Held*, that the carrier was justified in refusing to deliver, and therefore not liable to the shipper for the damage to the goods caused by the delay in the delivery.

Appeal from District Court, Linn County; William G. Thompson, Judge.

Action at law to recover damages resulting from defendant's failure to promptly deliver certain shipments of eggs. The trial court directed a verdict for the defendant, and plaintiff appeals. Affirmed.

L. P. Main, for appellant. Carroll Wright, for appellee.

DEEMER, J. In July of the year 1899 various parties living on the line of the Burlington, Cedar Rapids & Northern Railway Company delivered to said company numerous cases of eggs consigned to O. C. Knispel & Co. and Knispel & Lenhart, Chicago, Ill. This freight was delivered by the Burlington & Cedar Rapids Company to the defendant company at West Liberty, Iowa, for shipment to Chicago. Shipping receipts were issued by the Burlington Company, which recited that the goods were marked in the names of the aforesaid consignees. In due course the goods arrived in Chicago, and while yet in the possession of the defendant plaintiff sent it a telegram which read as follows: "Cedar Rapids, Iowa, July 9th, 1899. J. H. Norris, C. R. I. & P. Ry. Co., Chicago, Ill.: I hold bills of lading for eggs arriving to-day from B. C. R. & N. points consigned to O. C. Knispel and Co., and Knispel and Lenhart, Chicago. Do not make delivery until bills of lading are surrendered. I will be there Monday. Henry Schlichting." Defendant received this telegram, and on the strength thereof refused to deliver the goods to the consignees. Thereupon plaintiff wrote the following letter, which was delivered to one of the consignees, and by them presented to the railway company at its office in Chicago, Ill. The letter read in this wise: "Chicago, Ills. July 10th, 1899. Mr. Norris, C. R. I. & P. Agent at Chicago—Dear Sir: I wired you Saturday, July 8th not to deliver any eggs billed to O. C. Knispel and Co. and Knispel and Lenhart without bills of lading, that I would call on you to-day. That I held bills of lading. Now I saw the gentleman and I think he is A No. 1, so I will recall that order and you deliver the eggs to them with-

Digitized by Google

refusing to deliver until the
ding or freight receipts were pro-
duced. When these were produced, delivery
was promptly made, and, whatever the de-
lay, it was due to plaintiff's conduct with
reference to the goods. Had it delivered the
goods pursuant to plaintiff's letter, and it
should have transpired that the bills of lad-
ing had been assigned prior to the time the
letter was written, defendant could not have
defeated an action by the assignee for con-
version by showing the facts above recited.
Delay in delivery was due to plaintiff's own
conduct, and not to any wrong of the defend-
ant.

Evidence was offered to prove a custom to
liver without the production of bills of
ing. The evidence was not sufficient to
ablish any such custom, even if it was
petent to prove it. But we doubt the ad-
ibility of such evidence. Bank v. Bis-
72 N. Y. 615; Bank v. R. R. Co., 132
492, 33 S. W. 521, 53 Am. St. Rep. 505.
e order directing a verdict for defendant
right, and it is affirmed.

ERON v. MUTUAL LIFE & TRUST CO.

reme Court of Iowa. Oct. 22, 1903.)

ANCE COMPANIES—ACTIONS AGAINST—
UE—CONTRACT OF INSURANCE—AGENCY
TIFICATION — INSTRUCTIONS — EXCEP-
S.

ode, § 3499, providing, "Insurance com-
may be sued in any county in which
principal place of business is kept, or in
the contract of insurance was made, or in
he loss insured against occurred, * * *
he county of the domicile of the insured
time the loss occurred, or in the county
plaintiff's residence," is not restricted to
for loss under policies of insurance, and
ion for breach of a contract relating to
ce may be brought in the county in
he contract was made.

of a policy of insurance on plaintiff's
ale thereof by defendant insurance com-
d the payment to the latter by plaintiff
in shares of stock, is, although other
are involved, a contract of insurance,
action thereon is properly brought in
y where it was made, under Code, §
viding, "Insurance companies may be
ny county in which * * * the con-
nsurance was made," etc.
struction not excepted to must be re-
correctly stating the law applicable
e.

e plaintiff assigned certain stock to an
agent, to be used by the latter in pro-
olicy in defendant company on plain-
and the stock was accepted by the
ent of defendant, letters subsequent-
to plaintiff by the company's presi-
nizing the agent's authority to act
pany in the transaction, constituted
n of the contract, and bound the

om Superior Court of Cedar Rap-
Rothrock, Judge.

recover consideration paid by
defendant on a contract with ref-
nsurance in the defendant com-

pany. Verdict for plaintiff. From judgme
thereon defendant appeals. Affirmed.

Stephen H. Sibley, for appellant. W. J.
McCready and B. L. Wick, for appellee.

McCLAIN, J. From the allegations of
plaintiff's petition it appears that the defend-
ant is a life insurance company, with its
principal place of business in the city of
Des Moines, and that in October, 1900, the
plaintiff, who was then, and now is, a res-
ident of Linn county, had negotiations in
that county with one W. W. Ames, acting
as agent of the defendant company, with ref-
erence to transfer by plaintiff to the defend-
ant company of certain shares of stock in
a company known as the Home Savings &
Trust Company, in consideration for the is-
suance by the defendant company of a pol-
icy of insurance on the life of plaintiff, which
policy, after its issue, was to be sold by
said Ames as agent of the defendant com-
pany, and the proceeds thereof accounted for
to plaintiff. It is further alleged that the
agreed value of the shares of stock thus to
be transferred to the defendant company out
consideration for the policy of insurance, and
to be realized by the defendant company in
of said policy and paid over to plaintiff, was
$134.80, which was to be realized and paid
over within 60 days from the date of the
contract. In the first count of the petition
the statement of these facts is coupled with
allegations of false and fraudulent repre-
sentations as to the ability of the defendant
company to dispose of the policy on plain-
tiff's life and realize the agreed amount there-
from, and it is alleged that no policy was
ever issued by or delivered to the plaintiff,
and that he has been damaged to the extent
of the agreed price of the stock transferred.
In the second count of the petition it is al-
leged that defendant has wholly failed to
perform its part of the contract, and dam-
ages are claimed in the same amount.
This statement of the allegations of the
petition has been necessary in order to rule
on an assignment of error based on the re-
fusal of the trial court to grant a change of
the place of trial from the superior court of
Cedar Rapids to the district court of Polk
county, in which county is located the prin-
cipal place of business of the defendant com-
pany. The contention for appellant is that
the action was brought in the wrong county,
and that it should have been, on defendant's
motion, transferred to the county of defend-
ant's place of business. The motion was well
taken, under the provisions of Code, § 3501,
that "personal actions, except as otherwise
provided, must be brought in the county in
which some of the defendants actually re-
side," unless the case falls within some of
the provisions of Code, § 3499, which reads
as follows: "Insurance companies may be
sued in any county in which their principal
place of business is kept, or in which the
contract of insurance was made, or in which

Digitized by Google

affidavits of two persons who stated that a witness for the plaintiff had said to them, before he testified in the case, that he knew only one of the steers, and had never seen any of them more than twice, and the affidavit of this witness that he did not see any brands on the steers in question while in the defendant's yard. The evidence covered by the two first affidavits would tend in some degree to impeach the witness, and nothing more. It is a familiar rule in this state that a new trial will not be granted for impeaching purposes. Morrow v. C., R. I. & P. Ry. Co., 61 Iowa, 487, 16 N. W. 572. The plaintiff and some of his witnesses testified that at least one of the steers in question, and perhaps all of them, wore a brand when they were bought by the plaintiff, and when they were in the defendant's possession, and no testimony was offered by the defendant denying this. Furthermore, the defendant had an opportunity upon the trial to cross-examine the witness who made the affidavit as to the absence of a brand on the cattle he saw in the defendant's yard, or he might have called him as his own witness, and shown that fact by him. But he seems to have made no effort in that direction, and surely such lack of diligence should not be rewarded by granting a new trial.

The trial court did not abuse its discretion in refusing a new trial, and the judgment is affirmed.

ERRET v. PRITCHARD.

(Supreme Court of Iowa. Oct. 23, 1903.)

PARTNERSHIP — SETTLEMENT — FRAUDULENT EXCLUSIONS—ACTIONS—JUSTICES OF THE PEACE—JURISDICTION.

1. Where, after a partnership settlement, it was alleged that one of the partners, prior to the settlement, fraudulently appropriated to his own use a certain sum of money belonging to the firm, which should have been taken into account in the settlement, but was not, an action by one of the partners to recover one-half of such sum did not involve a settlement of partnership affairs, and was therefore maintainable before a justice of the peace.

Appeal from District Court, Shelby County; W. R. Green, Judge.

This action was originally commenced before a justice of the peace. A petition was there filed stating, in substance, that in May, 1899, plaintiff and defendant entered into a copartnership for the purpose of carrying on the business of dealing in live stock; that in December, 1899, a dissolution was agreed upon; and that a settlement and division of the property was had at that time. It is then alleged that during the existence of said partnership the sum of $90 in cash was drawn out of the business by defendant, and converted to his own use; that the facts in relation thereto were fraudulently concealed from prayed for in a sum equal to one-half the amount alleged to have been drawn out. To this petition the defendant demurred on the ground that it appeared on the face of the petition that the court had no jurisdiction of the subject-matter of the controversy. The demurrer was overruled, whereupon, the defendant refusing to plead further, judgment was rendered in favor of plaintiff as prayed. The defendant appealed to the district court, and in that court filed an answer in two divisions; in the first alleging a full settlement of all the partnership affairs; in the second, and by way of cross-petition, setting up the partnership, and alleging that no final settlement or accounting had ever been had, and praying for such and for judgment. Having thus answered, defendant filed a motion to transfer the cause to the equity docket. It is not so stated in the abstract, but it seems to be conceded in argument that the motion to transfer was resisted, and, pending the same, plaintiff filed a motion to strike the second division of the answer, for the reason that an equitable issue was raised thereby, which the justice could not have heard or determined. At this juncture the defendant filed his motion to dismiss, basing the same on the ground that the justice had no jurisdiction of the action; it appearing on the face of the petition that the same is brought by one partner against his copartner, and is founded upon an unsettled partnership transaction, and fraud in connection therewith; that the relief demanded involves an accounting between such partners. This motion was sustained, and judgment was entered against plaintiff for costs. From such judgment, plaintiff appeals. Reversed.

Cullison & Robinson, for appellant. Byers & Lockwood, for appellee.

BISHOP, C. J. It is conceded that the justice of the peace had no jurisdiction to entertain an action for an accounting or settlement of partnership affairs. This can be done alone in a court having equitable jurisdiction. It is also conceded that the jurisdiction of the district court on appeal depends upon the jurisdiction of the court from which the appeal was taken. If the justice had no jurisdiction, the appellate court acquires none by the appeal. McMeans v. Cameron, 51 Iowa, 691, 49 N. W. 856; Hollen v. Davis, 59 Iowa, 444, 13 N. W. 413, 44 Am. Rep. 688. If, then, this action was one for the settlement of partnership accounts, neither the justice nor the district court had jurisdiction, and the motion to dismiss was properly sustained. But we think the action was not such in character. In effect, the motion to dismiss makes admission of the truth of the matters alleged in the petition. We have then simply a case where, after a partnership settlement, it is made to appear that one of the partners, prior to

Digitized by Google

printed to his own use a specific sum of money belonging to the partnership, and which should have been taken into account at the settlement, but was not. The action is not based on fraud. That is alleged only in explanation of the omission to take the sum of money in controversy into account at the settlement. The theory upon which plaintiff sues is that, having wrongfully withheld the specific sum of money from the settlement, the defendant is now liable as for a money judgment for one-half such sum. And with this view we concur. Here no settlement of partnership affairs is necessary in order to determine the right of plaintiff to recover, and hence there is no necessity for the intervention of a court of equity. Was the specific sum of money withheld? is the only question to be tried. Such question being answered in the affirmative, the right of plaintiff to a judgment for one-half such sum follows as a matter of course. It has frequently been held that an action at law may be maintained between former parties, notwithstanding the subject-matter of the action grew out of partnership transactions, providing that no general adjustment of partnership affairs was necessary to a determination of the merits of such action. Thus in Donahue v. McCosh, 70 Iowa, 733, 30 N. W. 14, the court entertained an action at law to recover an amount claimed by one partner to be due from the other because of errors in computation made in the settlement of partnership affairs. In Farwell v. Tyler, 5 Iowa, 535, defendant was permitted to offset, as against a note given by him in settlement of partnership affairs, debts owing by the partnership, and which had been paid by him subsequent to the settlement. "Where a partnership has been dissolved, and the partners have accounted with each other as to everything, except one item, one partner may maintain an action at law against the other for his share of that item, because in such a case there are no equities to be adjusted, and no accounting is necessary, as would be the case had there been no settlement." 15 Ency. of Pleading & Practice, 1031; and see the cases there cited.

For the reasons above given, the motion to dismiss should have been overruled. The judgment is reversed.

STATEN v. HAMMER.

(Supreme Court of Iowa. Oct. 23, 1903.)

SPECIFIC PERFORMANCE—SALE OF LAND—AGENCY—EXCESS OF AUTHORITY—RATIFICATION—PLEADING—CONFESSION AND AVOIDANCE.

1. An agent employed to sell land at a certain price exceeds his authority in assuming to bind his principal to accept a part of the purchase price at the execution of the contract and the remainder at a deferred date, and to furnish an abstract of title and pay taxes and interest thereafter accruing.

¶ 1. See Brokers, vol. 8, Cent. Dig. § 143.

a contract to sell land, executed by an agent, defendant need not interpose a special plea confessing the agency and alleging an excess of authority, as plaintiff's cause of action requires an allegation of the agency and a sale under the authority conferred, and defendant's general denial put both allegations in issue.

3. Where the value of land sold by an agent without authority materially advances, such advance furnishes ground for refusal to ratify the unauthorized sale.

Appeal from District Court, Harrison County; A. B. Thornell, Judge.

Action in equity to enforce specific performance of contract to convey land. Decree for defendant, and plaintiff appeals. Affirmed.

Cochran & Egan, for appellant. Roadifer & Arthur, for appellee.

WEAVER, J. The alleged contract to sell and convey was made by one Robinson, who claimed to be the authorized agent for defendant for that purpose. Defendant denied having employed or authorized Robinson to sell the land, and further says that, if such an agency be established, said agent exceeded his authority in making the contract sued upon, and the same has never been approved or ratified by defendant. After hearing the testimony, the district court found that defendant did constitute Robinson his agent to sell the land, but further found that the contract made contained stipulations not authorized by defendant, and that plaintiff was therefore not entitled to specific performance. It is unnecessary for us to consider whether the alleged agency is established by the evidence, for, assuming the plaintiff's position in this respect to be correct, we are of the opinion that the conclusion of the district court as to the agent's act being in excess of his authority is clearly correct. Robinson's own statement as to his authority to sell is as follows: "I asked him what it [the price] was. He told me, and I asked him if I should sell it at that for him, and he said that at any time I could get that price to sell it. * * * All Mr. Hammer said was that he authorized me to sell at that price"—$25 per acre. Robinson does not claim that he was authorized to make a written contract in defendant's name, or at any time was authorized to depart from the terms first stated. The contract made by him with plaintiff is in writing, and provides for the payment of $500 on the signing of the contract, which was June 4, 1901, and the further sum of $2,500 on or before July 1, 1901, without interest. He further undertook to furnish plaintiff with an abstract of title showing the same to be free and clear in defendant, and to pay all taxes and the interest on an existing mortgage to March 1, 1902, on which date possession of the premises in good condition was to be given plaintiff. It is an elementary proposition that simple authority to sell at a given figure empowers the agent to do no more than make

Digitized by Google

t the execution of the contract and the re-
an inder at a deferred date, to furnish an ab-
tract of title and to pay taxes and interest
hereafter accruing, to say nothing of still
ther items inserted in the contract, he act-
d without authority.

It is urged by appellant that this objection
s not available to defendant save by special
plea confessing the agency and alleging the
xcess of authority, and that no such issue
s tendered. The point does not appear to
be well made. A plea in confession and
voidance is necessary only when defendant
proposes to admit the truth of a material al-
egation made by the plaintiff, and to avoid
liability thereon by affirmative proof of mat-
ers which destroy the effect of the allega-
ions admitted. In other words, such a plea
concedes to plaintiff an apparent or prima
facie right of action, and would entitle plain-
iff to judgment but for the matters affirma-
ively alleged in the answer. See Bouvier's
Law Dict., and 1 Chitty's Plead. (16th Am.
Ed.) 551, 552; Conger v. Johnston, 2 Denio,
6. In the case at bar plaintiff could state
a prima facie cause of action only by al-
eging Robinson's agency and a sale by such
agent in accordance with the authority so
conferred. Defendant's denial put both al-
egations in issue, and plaintiff's failure to
prove the latter rendered the dismissal of his
petition imperative. Considerable stress is
aid in argument upon the alleged fact that
after the creation of Robinson's agency the
value of the land materially advanced, and
that defendant for that reason alone refused
to recognize the sale. That such advance
would not justify a refusal to carry out the
contract of sale if made within the agent's
authority may be readily conceded, but it
is an entirely legitimate reason for refusing
to ratify an unauthorized sale, such as we
find this to have been.

The decree of the district court is right,
and is affirmed.

CRAIG v. WABASH R. CO.

(Supreme Court of Iowa. Oct. 22, 1903.)

RAILROADS—KILLING STOCK—FAILURE TO FENCE—EVIDENCE—ADMISSIBILITY—SUFFICIENCY—NEGLIGENCE IN OPERATING TRAIN—MATERIALITY.

1. Where, in an action for the killing of a horse on defendant's railway track, plaintiff relied on circumstances tending to show that the horse was struck by an engine while on the track, 56 feet north of the center of a highway crossing, while defendant's witnesses testified that the collision occurred on the crossing, the special finding that the horse was not struck on the crossing was equivalent to a finding that it was struck 56 feet north of the center of the crossing.

2. The testimony of witnesses that certain tracks were of a horse, which tracks indicated his motion—whether walking, running, or jump-

horse on defendant's railway tracks, it was important to ascertain the distance of the horse, when struck, from the north cattle guard, and the center of the highway crossing, the testimony of a witness that plaintiff pointed out certain depressions scooped in the track, from which he measured, was admissible, as connecting the measurements with the locality of the collision.

4. Plaintiff in an action for the killing of stock on defendant's railway showed the injury to his stock, and want of a sufficient fence at a point where defendant's right to fence existed. *Held* not rebutted by evidence that the fence at this point was erected by plaintiff, in the absence of any agreement with plaintiff to erect and maintain such fence, or that the fence was sufficient in its construction, and at the time complained of it was in a fair state of repair.

5. In an action for the killing of a horse on defendant's track, evidence *held* to show that the collision occurred beyond a highway crossing, and at a place where the company had the right to fence, but failed to do so.

6. Where, in an action for the killing of a horse on defendant's railway tracks, the jury found that the collision occurred at a place where defendant had a right to fence, but failed to do so, defendant's negligence in operating the train which killed the horse was immaterial.

Appeal from District Court, Appanoose County; Robert Sloan, Judge.

Action for the value of a horse alleged to have been killed by defendant at a point where it had the right to fence, but did not; also through the negligence of its employés. The highway crosses the defendant's right of way at an acute angle. The north cattle guard is 68 feet from the center of the crossing. Trestlework over a ravine forms the south cattle guard, and is 91 feet from the same point. A wing fence extending east intersects the right of way fence, and from such intersection to the highway fence from the corner of the pasture belonged to plaintiff, and over it his horse escaped August 10, 1900, went on the railroad track, and was killed. In the morning of that day it was in the pasture. Later the wires of the fence were found bent and on them hairs of the same color as of the horse. Tracks were traced over the fence up to the embankment from 50 to 60 feet south of the traveled road on the track, and then north to a point 30 feet south of the north cattle guard. To that point the tracks were of a horse walking, and from there they indicated that it was jumping, and the last—9 to 12 feet from the crossing—that its feet had scooped out the earth, as though struck by something. A track was found just outside the rail, immediately west of this, and the body of the horse in the ditch beyond. There was evidence tending to show that defendant failed to blow the whistle at the whistling post, but did blow it three times just as the engine passed over the trestlework, immediately before it struck the horse, at about 9 o'clock a. m., and that the bell did not ring; also that a horse could have been seen on the crossing a

Digitized by Google

quarter of a mile before the engine reached it. The evidence of defendant tended to show that all proper signals were given at the whistling post, and that the horse was not seen until the engine was too near to be stopped before striking it; that it was then running toward the track from a distance of 25 or 30 feet, and was struck on the crossing. Trial to jury resulted in a verdict for plaintiff, and a special finding that the horse was not struck on the crossing. From judgment rendered thereon, defendant appeals. Affirmed.

Fee & Fee, for appellant. C. F. Howell and C. H. Elgin, for appellee.

LADD, J. The highway, where it crosses the railroad, is 45 feet wide. The plaintiff relied on circumstances tending to show that the horse was struck by the engine while on the track 56 feet north of the center of the crossing. The defendant's engineer and fireman testified that the collision occurred on the crossing. The jury rejected their evidence as unreliable, by an answer to a special interrogatory that it did not happen at that place. This was tantamount to a finding that the horse was struck 56 feet north of the center of the crossing, for, under the evidence, the collision must have occurred at one of these two places. Appellant argues that the evidence supporting this conclusion is unreliable, and in any event not inconsistent with the contention that the animal was hit by the engine on the crossing. The probative force of circumstantial evidence requires no vindication at our hands, nor is it necessary to spend any time in demonstrating that the finding of horse tracks leading from a pasture to a point 56 feet from a crossing, and there terminating, and the finding of the body of the horse 12 feet beyond, in the ditch at the side of the track, is inconsistent with the testimony that he was killed by the engine at the crossing. The testimony that the tracks were of a horse, and indicated his motion—whether walking, running, or jumping—was clearly admissible. It was of facts somewhat in the nature of conclusions. These could not well be so described as to convey to the mind of the jury the inference of precisely what the horse was doing, and therefore the witness, as a part of the description, was properly allowed to state whether they were similar to tracks when walking or when running or jumping. "It is competent for a witness to testify to his conclusion, when the matter to which the testimony relates cannot be reproduced or described to the jury precisely as it appeared to the witness at the time." Yahn v. City of Ottumwa, 60 Iowa, 429, 15 N. W. 257; Bizer v. Bizer, 110 Iowa, 248, 81 N. W. 465; Stewart v. Anderson, 111 Iowa, 329, 82 N. W. 770.

2. It was important to ascertain the distance of the horse, when struck, from the north cattle guard and the center of the highway crossing. To enable him to measure such distance, a witness was allowed to testify that plaintiff pointed out certain depressions scooped out in the track, from which he measured. This was admissible as connecting the measurements with the locality of the collision, for plaintiff's testimony tended to show that the horse must have caused these when struck by the engine. Ward v. Ry. Co., 97 Iowa, 54, 65 N. W. 999.

3. From a point where the east right of way fence intersects the wing fence running north from the trestle to the northwest corner of the pasture, the fence belonged to plaintiff, and was somewhat in the right of way; and as, according to plaintiff's theory, the horse passed directly over this fence in the right of way to the point where it was killed, the defendant insists it is not liable for that fence was not shown to be defective, and, even if so, the loss was owing to plaintiff's negligence. The character of this fence does not appear, save that it was constructed of posts and wire. No evidence of its sufficiency to turn stock was introduced. If there was any agreement, express or implied, that the landowner should erect the right of way fence or keep it in repair, the record does not disclose it. The mere fact that he had maintained some kind of a fence there for 15 years did not, alone, warrant such an inference. The company had the right to fence its track at the point where the horse escaped. It failed to do so. Upon proof of this, and the injury to the animal by one of its engines passing over the track, a prima facie case was made out for plaintiff. Code, § 2055; Brentner v. C., M. & St. P. R. Co., 68 Iowa, 530, 23 N. W. 245, 27 N. W. 605; Manwell v. B., C. R. & N. R. Co., 80 Iowa, 662, 45 N. W. 568; Wall v. Des Moines, M. & N. R. Co., 89 Iowa, 193, 56 N. W. 436, Norman v. C. & N. W. R. Co., 110 Iowa, 283, 81 N. W. 597. If defendant was relieved from the duty of erecting or maintaining a fence by the action of plaintiff, or had other excuse, the burden of proof was upon it both to plead and establish such defense. Kingsbury v. C., M. & St. P. R. Co., 104 Iowa, 63, 73 N. W. 477. As said, the voluntary construction of some kind of a fence by the landowner along the right of way did not excuse the company from erecting that required by law. Louisville, etc., R. Co. v. White, 94 Ind. 257; Norfolk, etc., R. Co. v. McGavock's Adm'rs, 90 Va. 507, 18 S. E. 909. To relieve the defendant from responsibility, it must not only appear that the fence, in its construction, was sufficient, but at the time complained of it was in a fair state of repair. Jefferson, etc., R. Co. v. Sullivan, 38 Ind. 262. If this were shown, the company would not be liable, though the fence may have been erected by a mere volunteer. Hovorka v. Minneapolis, etc., R.

Digitized by Google

ıy fence was proven, and a sufficient fence ıs not shown to have been erected by him a volunteer, the escape of the horse into ɜ right of way must be held to have been ·ing to defendant's failure to comply with ɜ statute.

ɩ. Appellant also argues that the collision ıs not shown to have occurred beyond the ɜt boundary line of the highway; that is, ıere the company had the right to fence. ıiving the question as to whether this was ɜessary, we think the evidence is otherse. The grade at the crossing was about feet high. The approaches to the cross-; were 12 feet wide, and the planks 16 ɜt long. The horse, when hit, must have ɜn 56 feet from the center of these planks, ıich, in the absence of evidence, will be ɜsumed also to be in the center of the ghway. It was the duty of the company construct this crossing. Code, § 2054; .rley v. C., R. I. & P. R. Co., 42 Iowa, 234. had been maintained at the identical place : 35 years. In the absence of some con-ɔlling reason to the contrary, highways are be improved so that travel shall pass ɔng the middle line of the land appropri-ɜd therefor. Quinton v. Burton, 61 Iowa, 1, 16 N. W. 569. The company cannot ɜll complain of the assumption that it con-ɜucted the crossing at the place exacted law. The statute required the cattle ards and fence to be placed along the .e of highway. Andre v. C. & N. W. R. ., 30 Iowa, 107. These should then have en 22½ feet from the center of the cross-g. That the horse was struck beyond a .e 22½ feet from the center of the cross-g, if not on the crossing, as contended by fendant, the record leaves no doubt. In turning a verdict for plaintiff, and finding at the horse was not hit on the crossing, ɜ jury necessarily so concluded. The col-ion must have occurred, if the finding of ɜ jury is to be accepted, where the defend-t had the right to fence, and failed to do This being true, it is immaterial wheth-the defendant was negligent in the re-ɜcts alleged, and the errors assigned in ation thereto, if conceded to be such, were thout prejudice.

Affirmed.

HEINZ et al. v. BOARD OF EQUALIZATION OF CITY OF DAVENPORT.

(Supreme Court of Iowa. Oct. 21, 1903.)

XATION—SECURITIES BELONGING TO NON-ESIDENT—LOCAL AGENT—PERSONAL LIA-ILITY—DUE PROCESS OF LAW.

. Code, § 1320, declares that any person act-as agent, and having in his possession or ler his control any notes and securities be-ging to his principal, with a view to invest-or loaning, or in any other manner holding reserving a fraction of the interest as co tion. They retained possession of the se collected principal and interest when di ed after insurance and taxes, and fo her share of the income to the nonresi owner. *Held*, that the agents were, ui statute, personally liable for the taxes securities.

2. Code, § 1320, making an agent holdi or securities belonging to a principal pe liable for the taxes on such property, tho strued to make the agent personally li taxes on securities chiefly owned by a dent, and in which the agent retains a s terest, is not unconstitutional as depri agent of his property without due pr law.

3. Nor is it unconstitutional as deny agent the equal protection of the law.

Appeal from District Court, Scot ty; James W. Bollinger, Judge.

Appeal from a judgment of the court confirming the assessment for t of certain moneys and credits in the of the plaintiffs. Affirmed.

Heinz & Fisher, for appellants. Thuenen, Jr., for appellee.

WEAVER, J. 1. This case is, to extent, governed by the decision in (Trust Co. v. Board of Equalization (at the present term of this court) 96 878. As in that case, plaintiffs carr business of making loans of money i own names, and assigning the securiti obtained to their customers, reserv themselves a fraction of the interest e as their own measure of compensa profit. Certain securities thus taken b were assigned, with the reservatio tioned, to one Helen G. Renwick, the date of this assignment was a r of California. Said securities were the possession of plaintiffs under some ment, the details of which are not e clear. Plaintiffs testified that the them as a matter of "accommodati Mrs. Renwick. It appears, howeve the loans are made payable at the o plaintiffs, who say they reserved th half of 1 per cent. interest on the pr sum "for their trouble." They collecte cipal and interest as the same becan retaining for themselves their share earnings. The principal was sometim to her, and sometimes reloaned, as she elect. The insurance upon property c by the mortgages was looked after an in force, and accruing tax liens, if an removed, by plaintiffs. In short, ex the absence of power to sell or cancel curities, plaintiffs evidently were emp and expected to do all the owner cou self have done in the keeping possessi control of the same, and the possess held and the control so exercised were mutual profit and advantage of both to these transactions. It must also

Digitized by Google

with Mrs. Renwick, and as such, in the absence of any agreement to the contrary, had the legal right to their possession and control—a right which they appear to have exercised without interference or restraint on her part. Such being the case, we are constrained to hold, as in German Trust Co. v. Board, supra, that these moneys and credits are taxable under the provisions of Code, § 1320, and that the assessment to plaintiffs, as the resident agents in possession of the property of a nonresident principal, was right.

2. Appellants, in argument, contend that the statute is not to be construed as intending to make taxable any property whose legal situs is not in this state. If that proposition be conceded, we have still to inquire, where is the legal situs of the property here in question? If A., a resident of Illinois, has a thousand dollars in money deposited in an Iowa bank, or a thousand bushels of grain in an Iowa granary, the actual situs of the property in both cases is in this state; and it is no undue stretch of power for our Legislature to provide that the actual situs of the money, as well as of the grain, shall be its legal situs for the purposes of taxation. And this we understand to be the effect of the statute. The proposition that, although the actual physical property be in one state, its "legal situs" may be in another state, is a legal fiction, which, whatever effect we might be disposed to give it in the absence of legislative enactment, cannot be permitted to control the effect of an express statute. Hutchinson v. Board, 66 Iowa, 39, 23 N. W. 249. As said in the cited case, "It is the undoubted province of the General Assembly to determine what property actually within the state is taxable"; and even if the nonresident owner of property made taxable here finds himself taxed in the state of his residence on the theory that situs of his moneys and credits follows his person, that fact may prove him the victim of misfortune or hardship, but does not in any manner negative the power of this state over property actually within its jurisdiction, nor does it prove the tax invalid.

3. As was urged by the agent in the German Trust Co. Case, supra, it is here insisted that the statute as construed by us is unconstitutional, as depriving the agent of his property without due process of law, and denying him the equal protection of the law. It is needless for us to cite authorities that taxation levied and enforced in the ordinary manner is due process of law, in the constitutional sense of the term. There is nothing in this statute to except it from the operation of that principle. The agent who takes the moneys and credits of a nonresident principal into his possession and control for the purpose of profit to either or both of said parties does it with full knowledge of the nonresident party in its jurisdiction) as the owner, and he is not wronged when the tax is assessed against him. Counsel say he has no recourse against his principal. This conclusion does not necessarily follow from the premises, and, if it did, the liability is one which he voluntarily assumes, and he must be presumed to have accepted the property with all the burdens which the law has attached to such transaction. The distinction between the possession of securities as held by appellants in this case, and the possession held by an ordinary agent or attorney for mere purposes of collection, is too clear to require discussion. These matters have already been treated by us in the case above referred to, and it is unnecessary for us to repeat or extend the argument there employed.

The judgment of the district court is affirmed.

HODGE et al. v. MUSCATINE COUNTY et al.

(Supreme Court of Iowa. Oct. 22, 1903.)

TAXATION — DEPRIVATION OF PROPERTY — DUE PROCESS OF LAW—NOTICE—LICENSE—PROHIBITION — CIGARETTE LAW — COLLECTION OF TAX.

1. Code, § 5007, imposing a tax on buildings used in manufacture or sale of cigarettes, and providing that such tax shall be "assessed, collected, and distributed" in the same manner as the mulct liquor tax, entitles the owner to the benefit of the provisions of the mulct liquor tax law relating to the remission of taxes erroneously assessed; therefore it is not unconstitutional as depriving an owner, not directly engaged in the unlawful business, of his property without due process of law.

2. Said section is not illegal because it provides that payment of the tax thereby imposed shall not be a bar to prosecutions under section 5006, which absolutely prohibits the sale of cigarettes.

3. Code, § 5007, imposing a tax on the vendor of cigarettes and on buildings used in the manufacture or sale thereof, is constitutional, though it is not necessary, under the statute, that a person engaged in the business be present when the assessment is made.

4. The statute is not unconstitutional because providing for collection by summary method.

Appeal from District Court, Muscatine County; W. F. Brannan, Judge.

Suit in equity to enjoin defendants from assessing, levying, or collecting a cigarette mulct tax, upon the property of plaintiff Tabor, which was used by plaintiff Hodge for the purpose of retailing tobacco and cigars, on the ground that the provisions of the "mulct law" authorizing such tax is unconstitutional and void as applied to the owner of property which has been leased to another. The trial court dismissed plaintiffs' petition, and they appeal. Affirmed.

Dunshee & Dorn (J. Parker, of counsel), for appellants.

DEEMER, J. As the case involves the constitutionality of certain statutes, it seems necessary, although they are familiar to the

Digitized by Google

hange, or disposition of cigarettes or cigar-
tte paper. Section 5007 reads as follows:

"Tax on Sale. There shall be assessed a
ax of three hundred dollars per annum
gainst every person, partnership or corpora-
ion, and upon the real property, and the
wner thereof, within or whereon any ciga-
ettes, cigarettes wrapper, or any paper made
r prepared for the use in making ciga-
ettes, or for the purpose of being filled with
obacco for smoking, are sold or given away,
r kept with the intent to be sold, bartered
r given away under any pretext whatever.
uch tax shall be in addition to all other
axes and penalties, shall be assessed collect-
d and distributed in the same manner as
he mulct liquor tax, and shall be a per-
etual lien upon all property, both personal
nd real, used in connection with the busi-
ess; and the payment of such tax shall not
e a bar to prosecution under any law pro-
ibiting the manufacturing of cigarettes, or
garettes paper or selling, bartering or giv-
ng away the same. But the provisions of
his section shall not apply to the sales by
obbers and wholesalers in doing an inter-
tate business with customers outside of the
tate."

The sections referred to in section 5007,
elating to the "assessment collection and dis-
ribution" of the taxes provided for therein,
re in substance (before amendment by the
wenty-Ninth General Assembly) as follows:

"Sec. 2433. In the months of December,
Iarch, June and September of each year
nd before the twentieth day of each of said
nonths the assessor shall return to the audi-
or a list of persons liable to the tax and a
escription of the real property whereon the
usiness has been carried on."

"Sec. 2436. On the first day of January,
pril, July and October of each year there
hall be due and payable from each person
returned to the county auditor a quarterly
stallment of the mulct tax herein provided
r, which shall be a lien upon the real prop-
ty wherein such business is returned as be-
g carried, on, whether the person carrying
such a business or maintaining such place
correctly described or not. If such install-
ent is not paid within one month after it
comes due and payable, a penalty of 20
r cent. attaches together with 1 per cent.
r month thereafter until it is paid. The
rson so assessed is liable for at least one
arterly installment whether he quits the
usiness or not.

"Sec. 2437. On the last day of December,
arch, June and September of each year the
unty auditor shall certify to the county
easurer a complete list of the names re-
rned to him by the assessor, with a descrip-
on of the real estate and the names of the
cupant, and the owner or agent of such
operty.

the mulct tax as due and payable by the person carrying on such business, as a lien and charge upon and against the real property wherein or whereon such business is carried on.

"Sec. 2439. After the expiration of one month from the date of when such tax becomes due, if not paid it shall be delinquent and collectable by the treasurer in the same method as that in which other delinquent taxes are collectable and all the provisions as to collection of other delinquent taxes shall apply. Tax sales for said delinquent taxes shall also be made on the first Monday in June of each year.

"Sec. 2440. At any time after a quarterly installment of such taxes becomes delinquent, the treasurer may collect the same by seizing and selling any personal property used in connection with the business or in maintaining the place."

These are all the provisions of the mulct liquor law with reference to the assessment and collection of the liquor mulct tax. The following provisions of the liquor law with reference to the remission of taxes assessed erroneously are claimed to be applicable to the cigarette business, and in view of such claim we give an abstract of such provisions:

"Sec. 2441. At the meeting of the board of supervisors next following, the listing as aforesaid, application may be made to the board to remit the tax by petition duly verified and filed with the county auditor at least eight days before the time set for the consideration of the case, and notice for the same length of time must be served on the county attorney in writing. The averments of the petition shall be deemed denied and witnesses may be examined oath being administered by the chairman of the board with the same effect as to penalties for testifying falsely as if administered in court.

"Sec. 2442. The owner of the property may be heard in support of his application and evidence of the general reputation of the place shall be admissible. If it be found by a majority vote of the board that the tax is proper it shall stand; otherwise it shall be remitted. Either the petitioner or the county attorney may appeal to the district court and if the petitioner appeals he shall be required to give bond for costs accrued and to accrue, whereupon the auditor shall file a transcript in the office of the clerk."

"Sec. 2444. On appeal the trial shall be conducted as an equitable cause."

Appellants contend that section 5007 is void, because it deprives, or may deprive, citizens of their property without due process of law, in that: (1) The law contains no provision for notice to either dealer or real estate owner. (2) The charge imposed by section 5007 is in the nature of a criminal penalty, and the measures provided for its

Digitized by Google

and to be a tax upon the business. That a tax is imposed for the double purpose of regulation and revenue is no reason for declaiming it invalid. 2 Desty on Taxation, 1384. Being a tax, it was competent for the Legislature to prescribe the proceedings and processes for its collection. From the beginning the people of this country have collected taxes through administrative officers, and there has been no suggestion that ordinary judicial processes were necessary to meet the constitutional guaranty of "due process of law." Cooley on Taxation, 49. Power of taxation is inherent in sovereignty, and this power, it has been said, "in its nature acknowledges no boundary." As said by the great chief justice in McCulloch v. Maryland, 4 Wheat. 428: "The only security against the abuse of the power is found in the structure of the government itself. In imposing a tax the Legislature acts upon its constituents. This is, in general, a sufficient security against erroneous and oppressive taxation." The term "due process of law" is often misapprehended or misapplied. Indeed, it seems impossible to give a definition which is at once perspicuous and satisfactory. When applied to taxation, regard must be had of the nature of the power. As said in Hagar v. Reclamation Dist., 111 U. S. 701, 4 Sup. Ct. 663, 28 L. Ed. 569: "The power of taxation possessed by the state may be exercised upon any subject within its jurisdiction, and to any extent not prohibited by the Constitution of the United States. It may touch property in every shape, * * * and the amount of the taxation may be determined by the value of the property, or its use or productiveness. It may touch business in the almost infinite forms in which it is conducted, * * * unless restrained by provisions of the federal Constitution. The power of the state as to the mode, form, and extent of taxation is unlimited, where the subjects to which it applies are within its jurisdiction." Following this principle, it has been held that a statute of the state of Michigan, authorizing the treasurer to levy by distress, and sell any goods or chattels found in the possession of the tax debtor, and that no claim of property made thereto by any other person should be available to prevent the sale, was valid. Sears v. Cottrell, 5 Mich. 251. See, also, Sheldon v. Van Buskirk, 2 N. Y. 473. We need not go to this extent in the case now before us, although we have recognized the principle as applied to innkeepers' liens in Brown Bros. v. Hunt, 103 Iowa, 586, 72 N. W. 765, 39 L. R. A. 291, 64 Am. St. Rep. 198. On the authority of the Supreme Court of the United States, we do hold that, as to the person actually engaged in the business, it is not necessary that he be present, or that he have an opportunity to be present, when the assessment is made. McMillen v. Anderson, 95 U. S. 37, 24 L. Ed. 335; State R. R. or opportunity to be heard be necessary, it is sufficient if he be given an opportunity for contesting the charge in the ordinary courts of justice, with such notice to the person, or such proceeding in regard to the property, as is appropriate to the nature of the case. Davidson v. New Orleans, 96 U. S. 97, 24 L. Ed. 616.

The Supreme Court of the United States has uniformly adhered to the doctrine that a tax law which provides for a board of revision authorized to hear complaints respecting the justice of an assessment, and prescribes the time during which and the place where such complaints may be made, meets all constitutional requirements. Palmer v. McMahon, 10 Sup. Ct. 327, 33 L. Ed. 772, and cases cited; Glidden v. Harrington, 23 Sup. Ct. 574, 47 L. Ed. 798 (which sustains a similar provision to the act in question). See, also, Towns v. Klamath Co. (Or.) 53 Pac. 604; Paulsen v. Portland, 149 U. S. 30, 13 Sup. Ct. 750, 37 L. Ed. 637. We have heretofore given our adherence to this doctrine. In Trustees of Griswold College v. City, 65 Iowa, 634, 22 N. W. 904, we said: "It seems to be agreed, therefore, that property taken for the nonpayment of taxes is not taken without due process of law if the taxpayer is afforded an opportunity to be heard in relation to the tax, though it be only before the officers clothed with power to assess." See, also, Yeomans v. Riddle, 84 Iowa, 147, 50 N. W. 886. Indeed the rule seems to be elementary. Board v. R. R. Co., 48 N. J. Law, 146, 4 Atl. 578; Lent v. Tillson, 72 Cal. 404, 14 Pac. 71; Spencer v. Merchant, 100 N. Y. 585, 3 N. E. 682. An act very similar to the one in question was sustained by the Supreme Court of Ohio in Adler v. Whitbeck, 9 N. E. 672. We are constrained to hold that sections 2441 et seq. save the act from the claim of unconstitutionality because of want of notice and opportunity to be heard. The regular meetings of the board are fixed by law, and of these all persons must take notice.

What we have said, and the authorities already cited, answer most of the other contentions made by appellants. There is no requirement of law that such taxes must be collected through judicial proceedings. They may be enforced through summary processes, such as distraint or tax sale. This is well established by the cases already cited. The two cases relied upon by appellant—McBride v. Adams (Miss.) 12 South. 699, and Chauvin v. Valiton (Mont.) 20 Pac. 658, 3 L. R. A. 196—are not in point. The first involved a law imposing a fine or penalty for doing an illegal act, which was to be assessed and collected as a tax. This was held invalid because not due process of law. In the second the Legislature of Montana undertook to make a license a lien on property, and to provide for the collection thereof by

Digitized by Google

is by payment in redemption), there is no reason why possession may not be withheld until the expiration of the period within which the title is held in abeyance; and this, we think, is what was intended by the statute. Now, looking at the language thereof, to our minds there is nothing which seeks to determine or in any manner control the enjoyment of the rights conferred, or otherwise dictate terms in respect thereto. Certainly there is nothing anywhere in our law which forbids the disposition of such rights by gift, sale, or assignment, and, as we think, the one may be thus disposed of without any effect being had upon the other. Most certainly, one having a right of redemption may dispose of the same, and reserve possession to himself during the continuance of such right; or he may dispose of the right of redemption to one party, and give over right of possession to another. It would hardly be contended that one to whom had been assigned the right of possession merely could, in virtue thereof, assert any rights in respect of redemption; and yet, if there is but one right, which includes redemption and possession, such a result would, of necessity, follow. The precise question under consideration is one of first impression, as we have not been called upon heretofore to determine it. Our attention is not called to any cases arising in other states based upon a similar statute. Having given the question careful consideration, we are content to hold that the rights granted by the statute are not so interwoven one with the other, or so dependent the one upon the other, that they may not be disposed of separately. The corollary follows that a sale of one does not ipso facto carry the other. Holding this view, it follows that, as the present case is not based upon any sale or transfer of the right of possession, the plaintiff cannot recover. And this conclusion makes it unnecessary for us to consider the arguments and authorities pro and con as to the right of an execution creditor to seize upon and sell property rights of the character in question.

The judgment of the court below was right, and it is affirmed.

RUDD v. DEWEY.

(Supreme Court of Iowa. Oct. 21, 1903.)

ACTION FOR ALIENATION OF AFFECTIONS OF WIFE — PLEADING — ANSWER—ADMISSIONS —EFFECT—EVIDENCE — ADMISSIBILITY — INSTRUCTIONS—ERROR.

1. The prejudicial error arising from the giving of an erroneous instruction is not cured by the giving of a correct instruction.

2. Where, in an action for alienation of affections of plaintiff's wife, defendant, in his answer, pleaded a general denial of each and every allegation of plaintiff's complaint, and alleged that whatever relations he had with plaintiff's wife were with the knowledge, acquiescence, and consent of plaintiff, the colorable admission

3. The admission made by defendant in an answer is not an admission of his having had sexual intercourse with plaintiff's wife.

4. Where defendant in an action for alienation of affections of plaintiff's wife, on his direct examination, testified that, though plaintiff consented to criminal intercourse between his wife and defendant, and that the wife concurred in such arrangement, if she could have her own room, defendant had never occupied any other room in the house except his own, the question as to the fact of his having had sexual intercourse with the wife was not legitimate cross-examination.

5. A letter written by defendant in an action for alienation of affections of plaintiff's wife, which related solely to a proposition to settle "our affair," was not admissible in evidence as an offer of compromise, because containing no admissions of fact, though the letter stated defendant's conclusion that plaintiff "should be paid," but without stating for what.

6. In an action for alienation of affections of plaintiff's wife, evidence as to plaintiff's disposition of his children in consequence of his wife's improper conduct was admissible, as the consequence of the breaking up of plaintiff's family relations might be shown as a part of the damages suffered, if defendant was guilty.

7. In an action for alienation of affections of plaintiff's wife, plaintiff is competent to testify as to the value of his wife's services per year.

Appeal from District Court, Crawford County; Z. A. Church, Judge.

Action for alienation of affections of plaintiff's wife. Verdict for plaintiff for $1,200 damages. From judgment thereon, defendant appeals. Reversed.

Conner & Lally, for appellant. Salinger & Korte and Shaw, Sims & Kuehnle, for appellee.

McCLAIN, J. By the answer of defendant two issues were raised which are material for consideration: First, that resulting from the general denial of each and every allegation of plaintiff's petition; and, second, that arising from the allegation that "whatever relations he [defendant] had with plaintiff's wife were with the knowledge, acquiescence, and consent of the plaintiff." Plaintiff moved to strike out the second division of defendant's answer for the reason that the allegations thereof were redundant, irrelevant, and constituted no defense, and for the further reason that the same were neither an admission, denial, nor confession and avoidance. When this motion was argued, and again when the evidence was introduced, there was some colloquy between the court and counsel as to whether counsel intended by the second division of the answer to admit the fact of illicit intercourse between defendant and plaintiff's wife. Counsel for defendant insisted consistently throughout that the second division contained a sufficient admission of the fact for the purposes of the pleading, in order to entitle him to introduce evidence of the matter pleaded by way of confession and avoidance, and that at the same time there was no such admission as to relieve the plaintiff of the obligation to prove

Digitized by Google

tained in the first division of the answer. The court took the view that the second division of the answer contained an admission of fact of illicit intercourse, and overruled plaintiff's motion to strike out that division. When the court came to instruct the jury, it stated the defenses of defendant as follows: "For answer, defendant says, first, that he denies each and every allegation made by the plaintiff; second, he admits that he had unlawful sexual intercourse with plaintiff's wife, and says that he had such intercourse with the knowledge, acquiescence, and consent of the plaintiff. * * * The burden is on the plaintiff to show a preponderance of the evidence for the truth of the allegations of his petition." And the court gave the following instruction: "As the defendant admits that he had unlawful sexual intercourse with plaintiff's wife, you will treat that fact as proven, and it is unnecessary for the plaintiff to prove that claim in his petition. But before plaintiff can have a verdict, he must prove every claim made in his petition, except that defendant had intercourse with plaintiff's wife, by a preponderance of the testimony. That is, he must so prove that he was damaged as he claims in his petition, and all other allegations of both counts of the same, except the fact of intercourse." By this instruction the jurors were plainly told that the colorable confession made in the second division of the answer for the purpose of supporting an allegation of new matter by way of avoidance obviated the necessity of proving the matter thus colorably confessed, although in another division of the answer all the allegations of plaintiff's petition were denied. It is evident that this was an erroneous interpretation of the effect of the division of the answer in which the defendant sought to confess and avoid plaintiff's allegations. By the rules of common-law pleading, the defendant was not allowed in his pleading to present simultaneously several distinct answers to plaintiff's allegations. There must be but a single issue for determination by the jury. Stephen, Pleading, 131; Perry, Common-Law Pleading, 303. In equity, however, the defendant might interpose as many defenses as he had under the facts of the case, and this was allowed also in pleadings at common law, by virtue of the statute 4 Anne, c. 16, § 4; and by the reform procedure, as in force in all the states in which the code system prevails, distinct defenses are allowed to be pleaded simultaneously, each being stated in a separate division of the answer, consistent in itself, and sufficient to constitute a defense to the action. Pomeroy, Remedies, §§ 715–725; Bliss, Code Plead. § 342; Daniel, Eq. Proced. (4th Am. Ed.) 713, 714. As to whether defendant, interposing distinct defenses in separate divisions of his answer, might rely upon defenses inconsistent with each other (that is, of such nature that if one thorities in which the code system has been interpreted are in conflict; and it has sometimes been said that inasmuch as the defendant must plead truthfully, he cannot rely at the same time on two or more defenses which are absolutely inconsistent with each other. Derby v. Gallup, 5 Minn. 119 (Gil. 5); Atteberry v. Powell, 29 Mo. 429, 77 Am. D. 579. But in many cases the decision of the question has been made to turn, not on the right to plead inconsistent defenses, but on the question whether the distinct defenses pleaded were in fact necessarily inconsistent. Rhine v. Montgomery, 50 Mo. 566; Weton v. Lumley, 33 Ind. 486. Any uncertainty of the law in this respect, however, has been definitely settled in this state by Code § 3620, which is as follows: "Inconsistent defenses may be stated in the same answer or reply, and when a verification is required it must be to the effect that the party believes one or the other to be true, but cannot determine which"—which is the same, in substantial effect, as section 2937 of the Revision of 1860, the first provision on the subject in our statutory history. Under our Code it has uniformly been held, in a series of decisions, the first of which was rendered before there was any specific provision on the subject, that defendant might, in different divisions of his answer, plead a general denial and a confession and avoidance, and that the effect of the general denial would not be nullified by the colorable confession necessarily alleged in connection with the avoidance. Grash v. Sater, 6 Iowa. 3[illegible]; Shannon v. Pearson, 10 Iowa, 588; Quigley v. Merritt, 11 Iowa, 147; Treadway v. Sioux City & St. P. R. Co., 40 Iowa, 526; Barr v. Hack, 46 Iowa, 308; Heinrichs v. Terrell, 65 Iowa, 25, 21 N. W. 171. And on the same reasoning it has been held that the pleading of matter in confession and avoidance in the reply does not waive the general denial which, by virtue of Code, §§ 3576, 3622, 3648, is interposed to all allegations of new matter in the answer by operation of law. Day v. Mill Owners' Mut. Ins. Co., 75 Iowa, 694, 38 N. W. 113; Nichols v. Chicago G. W. R. Co. 94 Iowa, 202, 62 N. W. 769; Schulte v. Coulthurst, 94 Iowa, 418, 62 N. W. 770. But even in states where inconsistent defenses are not allowed, the remedy is by motion to strike or to require an election; and, if the two defenses are allowed to stand, the colorable confession in one division, which is introduced or implied in order to support matter in avoidance, does not waive the general denial pleaded in another. Pomeroy, Rem. § 724; Siter v. Jewett, 33 Cal. 92. The theory of the courts in some states where there is no specific provision allowing inconsistent defenses, that, as the defendant should allege the truth, he ought not to be allowed to rely upon different states of fact inconsistent with each other, as against plaintiff's claim, is, after all, no more cogent than that recog-

Digitized by Google

fense which are absolutely inconsistent with each other. Absurd as it may seem at first blush to allow defendant, charged with having negligently broken a borrowed kettle, to answer that he never borrowed the kettle, that it was broken when he borrowed it, and that it was sound when returned, nevertheless, when it is reflected that the controversy may be about a kettle borrowed by defendant's servant, as to which defendant had no knowledge whatever, and that, the servant having disappeared, defendant will be entirely dependent on such casual evidence as he may be able to scrape up in the neighborhood, the rule is not by any means unreasonable or without support in public policy. The defendant may not know what set of facts he will be able to establish. He is absolutely dependent upon the testimony of witnesses as to matters not within his personal knowledge, and he ought not to be defeated if on the trial any legitimate defense which he has pleaded is established by the evidence. Bell v. Brown, 22 Cal. 671; Buhne v. Corbett, 43 Cal. 264. The case before us illustrates the policy of this rule, for defendant, in his testimony, absolutely denied sexual intercourse with plaintiff's wife, and also testified as to a proposition made by the husband, which, if truly related, would have justified defendant in believing that such intercourse would not be objectionable to the husband. Whatever doubts the jury might have entertained with reference to the credibility of this testimony, defendant had the right to have it considered by them, as judges of the facts.

Counsel for defendant urge that, whatever error may have been committed by the court in the instruction already quoted, it was cured by instructions given in another part of the charge, recognizing the correct rule of law. But those instructions were absolutely inconsistent with the one above referred to, and it is well settled that prejudicial error in the giving of one instruction is not cured by stating the correct rule in another. Vanslyck v. Mills, 34 Iowa, 375; Hawes v. Burlington, C. R. & N. R. Co., 64 Iowa, 315, 20 N. W. 717.

It is apparent from what has been said that the court erred in his statement of the defenses as above quoted. It is true, as matter of pleading, that the second division of the answer impliedly admitted improper relations of defendant with plaintiff's wife; such colorable admission being necessary to support the allegation of new matter by way of avoidance. But such colorable admission was not an admission of fact for the purpose of the trial, but only for the purpose of the pleading. Moreover, the admission is not of unlawful sexual intercourse, either in fact or by implication, for defendant may have had such relations with plaintiff's wife as to be liable in an action for alienation of affections, without actual sexual intercourse. The importance unable to have sexual intercourse with her, because of his physical incapacity. If defendant, by the exercise of improper influences over and intimacies with plaintiff's wife, induced her to so far ignore her obligations to her husband as to commit such an act, he undoubtedly rendered himself liable in damages to the wronged husband, although actual intercourse was impossible. Therefore his implied confession in the second division of his answer, that he had improper relations with plaintiff's wife, did not constitute an admission of sexual intercourse. In fact, the trial court wholly misconceived, as it appears from his instructions, the nature and effect of the plea in confession and avoidance.

A few of the other errors assigned need to be noticed, in view of the possibility of a new trial. One of these is that defendant having testified on his examination in chief, in effect, that, although plaintiff consented to criminal intercourse between his wife and defendant, and the wife concurred in such prospective arrangement if she could have her own room, defendant had never occupied any other room in the house except his own, he was asked on cross-examination, against objection properly made, what the fact was about his having had sexual intercourse with plaintiff's wife. This, we think, was not legitimate cross-examination. No matter how apparent it may have been that defendant was skillfully avoiding giving testimony as to that material fact on direct examination, if the plaintiff desired to establish it by defendant, he should have done so by making defendant his witness, and not on cross-examination. The ruling of the court was perhaps not in itself such error as would warrant reversal, but we think it was erroneous.

A certain letter from defendant to plaintiff was admitted in evidence as tending to show an offer of compromise by defendant to plaintiff of the wrong done. Offers of compromise are not admissible, as against the party making them, unless they contain admissions of fact. Rosenberger v. Marsh, 108 Iowa, 47, 78 N. W. 837; Kassing v. Ordway, 100 Iowa, 611, 69 N. W. 1013; State v. Lavin, 80 Iowa, 555, 46 N. W. 553; Doon v. Ravey, 49 Vt. 293; Durgin v. Somers, 117 Mass. 55; Sanborn v. Neilson, 4 N. H. 501. The letter offered in evidence did not admit in any way nor suggest any improper relations between the defendant and plaintiff's wife, but related solely to a proposition to settle "our affair." It is true, the writer stated his conclusion that plaintiff "should be paid"; but for what, does not appear. No evidence was left in the record connecting this conclusion of defendant with any claim of plaintiff relating to this cause of action. The letter, therefore, should have been excluded. The letter from plaintiff to defendant, written in reply, should also have been excluded.

Digitized by Google

quence of the improper conduct of his wife, were not well taken, as the consequence of the breaking up of plaintiff's family relations might well be shown as a part of the damage suffered, if defendant was guilty of the wrong charged against him. Nor was the objection that plaintiff was incompetent to testify as to the value of his wife's services per year well founded. Certainly the husband was as well qualified as any one to testify as to the value of such services. Other questions argued are not likely to arise on a new trial, and need not be considered.

For the reasons already given, the judgment is reversed.

McCORMICK HARVESTING MACH. CO. v. MORLAN.

(Supreme Court of Iowa. Oct. 21, 1903.)

CONTRACTS—CONDITIONAL DELIVERY—PAROL EVIDENCE—CONTRADICTING WRITING.

1. Where a contract for the purchase of a machine is delivered to seller's agent, parol evidence in an action on the contract is admissible to show that the contract was delivered to the agent to be held, and not to be delivered to the seller until further direction, as it does not contradict the writing, but shows it never became operative.

Appeal from District Court, Carroll County; Z. A. Church, Judge.

Action upon a written contract for the purchase of a mowing machine. Defendant admits the signing of the contract and a tender of the machine, but avers that the contract was not delivered to plaintiff, and further pleaded that his signature to the instrument was obtained by fraud. On these issues the case was tried to a jury, resulting in a directed verdict for the plaintiff. Defendant appeals. Reversed.

M. W. Beach and M. R. McCrary, for appellant. Lee & Robb, for appellee.

DEEMER, J. Defendant offered evidence to the effect that he signed the order or contract for the machine, and gave it to an agent of plaintiff to hold until he found out about the price of another machine which had been offered him, and that this agent was to hold the order, and not send it to the plaintiff until he had heard from defendant again. He also testified that, after ascertaining the price of the other machine, he gave the agent no authority to deliver the contract, and that he never at any time told him to deliver it to the plaintiff. Some evidence was also introduced for the purpose of showing fraud on the part of this agent, but, in view of our conclusion, it is not necessary to consider this evidence.

¶ 1. See Evidence, vol. 20, Cent. Dig. §§ 1856, 1861, 1941.

ery of the contract, and directed a verdict for plaintiff. This was clearly erroneous. The evidence regarding delivery did not tend to vary or contradict the terms of the agreement; and it is always competent, as we understand it, to show by parol that a written instrument like the one in suit was never in fact delivered. Browne on Parol Ev. § 32 et seq.; Whitaker v. Salisbury, 15 Pick. 534; Leppoc v. Bank, 82 Md. 136; Reynolds v. Robinson, 110 N. Y. 654, 18 N. E. 127. Such evidence does not offend against the rule that parol testimony is not admissible to vary or contradict the terms of a written contract, but is received for the purpose of showing that it never became operative. Delivery involves something more than the mere passing over of the papers. Intent to make it operative is also an essential. This is fundamental doctrine. Bishop on Contracts, § 349 et seq., and cases cited. Hogueland v. Arts, 113 Iowa, 640, 85 N. W. 818. These rules are so elementary that it is hardly necessary to discuss them. The trial court, as we understand it, held, however, that, as there was actual delivery to the seller's agent, it was not competent for defendant to show that this agent was to hold the contract in escrow; that the delivery to him was conditional, or that he (the defendant) did not in fact intend to make delivery to the plaintiff. Had the instrument been a deed, there might, perhaps, be some basis for this holding. Westman v. Krumweide, 30 Minn. 313, 15 N. W. 255; Braman v. Bingham, 26 N. Y. 483. But that rule does not obtain as to simple contracts. Burke v. Delaney, 153 U. S. 228, 14 Sup. Ct. 816, 38 L. Ed. 698; Westman v. Krumweide, supra; Juilliard v. Chaffee, 92 N. Y. 529; McFarland v. Sikes, 54 Conn. 252, 7 Atl. 408, 1 Am. St. Rep. 111; Wilson v. Powers, 131 Mass. 539. The distinction is clearly pointed out in Bishop on Contracts (Enlarged Ed.) § 357. Moreover, the evidence tended to show that the contract was delivered to the plaintiff's agent to be held for defendant, and not to be delivered until further directions from him. It was not delivered to the plaintiff's agent as such, but the agent was made the representative of the defendant, to hold the contract for certain purposes. Under this state of facts, it is clear there was no delivery to the plaintiff, and the court was in error in striking out the evidence and in directing the verdict. See, as sustaining our conclusions, Cin. R. R. Co. v. Iliff, 13 Ohio St. 235; Watkins v. Bowers, 119 Mass. 383; Brown v. St. Charles, 66 Mich. 71, 32 N. W. 926; Benton v. Martin, 52 N. Y. 570; Sweet v. Stevens, 7 R. I. 375. The point was not involved in Bemis v. Allen (Iowa) 93 N. W. 50, hence what is said in that case is not controlling.

The judgment is reversed.

Digitized by Google

BACON v. IOWA SAVINGS & LOAN ASS'N et al.

(Supreme Court of Iowa. Oct. 21, 1903.)

BUILDING AND LOAN ASSOCIATIONS—LOAN—USURY—DEFENSE AVAILABLE TO ASSIGNEE—COMPUTATION OF INTEREST.

1. A plea of usury in a loan made by a building and loan association to defendant's assignor cannot be interposed by defendant, his assignor not having authorized it.

2. Under Code, § 1898, providing that the borrower from a building and loan association is to be charged with the full amount of the loan, together with delinquent dues, interest, etc., and credited with the withdrawal value of his pledged stock, but that "no greater recovery shall be had than the net amount of principal actually received, with interest thereon at a rate not greater than twelve per cent.," simple interest should be computed at the rate of 12 per cent. from the date of the loan, without rests, and the total amount of the interest and premium, paid and delinquent, also determined, and, if the latter amount is larger than the former, the statutory limit has been exceeded, and the borrower is entitled to credit for the excess in addition to the withdrawal value of his stock.

Appeal from District Court, Humboldt County;. W. B. Quarton, Judge.

Action for an accounting and for the cancellation of a mortgage. In October, 1892, one McComb borrowed of the defendant association $2,000, giving his note therefor, and securing it by a mortgage on real estate and by pledging 20 shares of stock in the association. This real estate and stock was afterwards transferred to the plaintiff, who assumed the debt. By the terms of the contract the borrower agreed to pay $12 per month dues on his stock and all fines, and the further sum of $12 premium and $10 interest on the loan each month. The premium was reduced to $8 per month April 1, 1899. $1,080 was paid on dues, $978 on premium, and $895 on interest. The defendant by cross-petition asked a foreclosure of the mortgage and a judgment for the sum found due thereon. There was a decree for the defendant association for a part of its claim. Both parties appeal. The association will be designated the "appellant." Reversed.

Baily & Stipp, for appellant. Clarke & Cohenour, for appellees.

SHERWIN, J. Conceding, for the purposes of this case, that the contract between McComb and the defendant association was tainted with usury, the plea cannot be interposed by the plaintiff, for he was neither a party to that contract nor authorized by McComb to avail himself of such a plea. Hollingsworth v. Swickard, 10 Iowa, 385; Frost v. Shaw, Id. 491; Perry v. Kearns, 13 Iowa, 174; The Burlington Mutual Loan Association v. Heider, 55 Iowa, 424, 5 N. W. 578, 7 N. W. 686; Iowa Savings and Loan Association v. Chase, 73 N. W. 1100. Moreover, the contract in question is directly within the class legalized by the curative act of the Twenty-Seventh General Assembly, p. 32, c. 48. Association v. Heidt, 107 Iowa, 297, 77 N. W. 1050, 43 L. R. A. 689, 70 Am. St. Rep. 197; Association v. Curtis, 107 Iowa, 504, 78 N. W. 208; Association v. Selby, 111 Iowa, 402, 82 N. W. 968; Edworthy v. Iowa S. & L. Ass'n, 114 Iowa, 220, 86 N. W. 315. We are not advised as to the method of computation adopted by the trial court, resulting in a judgment for the association for only $396.20. Under section 1898 of the Code, the borrower is to be charged with the full amount of the loan received by him, together with delinquent dues, interest, premium, and fines, and he is to be credited with the withdrawal value of his pledged stock, but "no greater recovery shall be had than the net amount of principal actually received, with interest thereon at a rate not greater than twelve per centum" on the amount so received. There is no question here as to the withdrawal value of the stock. The only remaining question is as to the amount which the association may recover under the 12 per cent. limit fixed by the statute. In Iowa Deposit & Loan Co. v. Timme, 85 N. W. 820, we held that the computation of interest under the statute should be without rests occasioned by the payment of interest, dues, and premiums. Following this rule to ascertain what rate of interest the borrower has paid, simple interest at the rate of 12 per cent. should be computed from the date of the loan, and the total amount of interest and premium, paid and delinquent, determined, and, if the latter amount is larger than the former, the statutory limit has been exceeded, and the borrower is entitled to credit for the excess in addition to the withdrawal value of his stock. See Briggs v. Iowa Savings and Loan Association, 114 Iowa, 232, 86 N. W. 320. The interest and premiums paid and delinquent in this case do not exceed the 12 per cent. limit, and the association was entitled to recover the difference between the loan and total delinquencies, amounting to $2,197, and the withdrawal value of the stock, $1,520.60, with interest as prayed.

The judgment is therefore reversed.

HOSKINS v. IOWA LAND CO.

(Supreme Court of Iowa. Oct. 15, 1903.)

TAX SALE—POSTING NOTICE—NOTICE TO REDEEM—PROOF OF SERVICE.

1. The requirement that notice of tax sale be posted on the "courthouse door" is satisfied by posting on a bulletin board at the door.

2. Were posting of notice of a tax sale on a bulletin board at the courthouse door not a satisfaction of the requirement that it be posted on the door, it would be within Code 1873, § 880, providing that no irregularity or informality in the advertisement shall invalidate the sale.

3. The affidavit making proof of service by advertisement of notice to redeem from tax sale need not refer to or have attached the original manuscript of the notice. The printed notice is sufficient.

Digitized by Google

County;
Action
Decree a
Affirmed.

S. J. Q
iant. Rol
appellee.

WEAV
turns up
der whic
ant cont
of the sa
house do
(2) beca
regular
proof of
1. The
was not
was in
used fo
the por
door.
the not
prescrib
utory
strictly
der up
quirem
door"
by pos
The e
the no
and o
need
where
not ne
which
buildi
buildi
a sep
there
reaso
this a
provi
1873,
sale
effec
the
of th
conv
hold
ciple
N.
deci
bull
stat
noti
peri
def
2
dee
in
bei
say
tifi

Digitized by Google

garnishment, whereupon the purchaser claimed the realty and invalidated the sale, an allegation that the purchaser "so answered as garnishee as to create the conviction that the title to the realty * * * had not passed to her at the time of the levy," is merely a conclusion.

3. A judgment creditor levied on realty, and also garnished a purchaser thereof. The attorney for the purchaser, representing also the judgment debtor, under agreement with the latter's attorney, and in pursuance of an alleged conspiracy to defeat collection of the judgment, advised the purchaser to take possession, which she claimed to have done prior to the levy. Answering as garnishee, she said she had agreed to buy the property, and had paid $10 on account, the deal to be consummated if the title proved satisfactory. She was ordered to appear at the next term of court, but her further answer was not taken. She deposited no money as garnishee. No objection was made by any one to the levy, and the premises were sold, and bid in by the creditor, and satisfaction of the judgment entered, whereupon the garnishee secured her discharge, without notice to the creditor. She then instituted a successful action to set aside the sale, claiming title in herself. *Held*, that the creditor had no cause of action for conspiracy, no unlawful act having been done.

4. That the garnishee's attorney, when procuring her discharge, had it in mind to invalidate the sale, would not affect the case.

5. A bill in equity to sequester a fund belonging to the debtor in the hands of third persons is not the proper remedy for a judgment creditor who has secured no lien on the fund, attachment being the proper and adequate remedy.

6. The mere fact that a fund belonging to a judgment debtor in the hands of third persons may elude attachment is not ground for invoking equitable relief, especially where inability to make the judgment out of other property is not alleged.

Appeal from District Court, Muscatine County; P. B. Wolfe, Judge.

According to the petition a judgment had been entered against Louisa A. Washburn in 1887. Execution issued thereon September 27, 1898, and was levied on a house and lot in Muscatine owned by her. Sarah E. Lohr was served with notice of garnishment on the same day, and made answer to the officer serving the notice. Later the realty was advertised, and bid in at the sheriff's sale, occurring October 29th of the same year, by the plaintiff, then owner of the judgment, for the full amount due thereon, with costs. Thereupon Mrs. Lohr's attorney, by directing the court's attention to the satisfaction of the judgment, procured her discharge as garnishee. She then paid Mrs. Washburn the remainder of the purchase price except $343, which was deposited with Jayne & Hoffman to save her harmless in a suit to be brought to set aside the sheriff's sale, to be paid to Mrs. Washburn, less attorney's fees should the suit prove successful; otherwise for redemption from such sale. Suit was instituted as proposed, and the certificate of sale set aside. Thus both the realty and the purchase price eluded plaintiff in his efforts to enforce his judgment against Mrs. Washburn. The plaintiff seeks through this suit in equity to reach the fund in the hands of Jayne & Hoffman to satisfy the amount bid at the sheriff's sale, with interest and attorney fees expended; and, if this no longer remains in their custody, then judgment against all the defendants. He also asks judgment against defendants for all the expenses he has incurred in the litigation. The decree setting aside the sheriff's sale is not assailed, and the house and lot must be treated as having been sold before the levy of the execution, and, of course, the order discharging the garnishee is to be regarded as rightly entered, unless the allegations of the petition, if accepted as true, are sufficient to establish its invalidity. The plaintiff, in addition to the recital of the above matter, avers: That Chas. A. Lloyd was agent for Mrs. Washburn in negotiating the sale, and William Hoffman was attorney for Mrs. Lohr, to see that she should obtain an unincumbered title, and subsequently became the attorney of Mrs. Washburn, by contract with Lloyd, to defeat the garnishment proceedings against Mrs. Lohr. That these parties had knowledge of the plaintiff's judgment, and conspired together to defeat its collection and to defraud the plaintiff. That Lloyd and Hoffman, in pursuance of said conspiracy, advised Mrs. Lohr to go into possession of the premises, which she claimed to have done prior to the levy of the execution. That she answered as garnishee, when served with notice, to the officer, under the direction of Hoffman, to the effect "that she had agreed to buy the said property, and had paid ten dollars on account of the purchase price, and that the deal or trade was to be consummated if the title should prove satisfactory," and was notified to appear and answer at the next term of court. That, "having so answered as to create the conviction that the title to the realty levied upon by plaintiff had not passed to her at the time of the levy," neither she nor either of the other defendants, although knowing of the levy upon and sale of the realty, made any objection thereto. That plaintiff, relying upon the truthfulness of the answer, and also the failure of any of defendants to make objection, bid in the property at the full amount of the judgment and all costs. That William Hoffman, while professedly acting for Mrs. Lohr, was really acting for Mrs. Washburn in procuring the discharge of the garnishee without notice to plaintiff. That the defendants, in testifying in the suit to set aside the sheriff's sale, concealed the payment of any money to Jayne & Hoffman in fraud of plaintiff's rights. That, after decree in said suit had been entered, plaintiff perfected his appeal to the Supreme Court, but when about to prepare his abstract said Lloyd entered into negotiations with plaintiff's attorneys for a settlement, and requested that no further expense be made in preparing an abstract until he could communicate with and receive an answer from Mrs. Washburn, who resided in California, and thereby induced plaintiff's attorneys to postpone filing said abstract beyond the time for filing the same, and refused their proposition of settlemen

Digitized by Google

said default, and, in pursuance of said conspiracy, filed a motion to dismiss the appeal, which was sustained. That, had Mrs. Lohr stated the facts as she now claims them in her answer as garnishee, or given notice thereof to plaintiff at any time before the sale, all the subsequent litigation would have been avoided, and plaintiff able to collect his claim. That said Hoffman would have so advised her but for his employment by Mrs. Washburn at the same time. "That claiming to the said district court, as reason for the discharge of the said Sarah E. Lohr as garnishee, that the execution had been satisfied by a sale of realty which she intended afterwards to and did contest as void, and in fact no sale, was a fraud upon this plaintiff and upon the court, and was all in pursuance of a conspiracy engineered by the said William Hoffman, and assented to and participated in by the said Sarah E. Lohr and Chas. A. Lloyd, first, to induce and compel a sale of the realty by suppressing and concealing the claims they ultimately intended to make concerning the title to the realty; and, second, to procure a release of a garnishment, which all of the defendants knew was valid if their claims were truthful as to the condition of the title to the realty when it was levied upon; and, finally, having procured the garnishment to be released, to conceal enough of the purchase money in the shape of a deposit to protect Mrs. Lohr from payment of the judgment in any event, and then for the first time to assert such claims to the real property as to have the sheriff's sale thereof held to be invalid." That there is no adequate remedy at law, and ordinary proceedings would enable Jayne & Hoffman to transfer the fund in their hands beyond the court's jurisdiction. The prayer was for the relief heretofore stated. A general demurrer was sustained, and, as plaintiff failed to plead over, the petition was dismissed. Plaintiff appeals. Affirmed.

Richman & Richman, for appellant. Jayne & Hoffman, for appellees.

LADD, J. The vice running through appellant's argument is the assumption that defendants owed plaintiff the duty of aiding him in the enforcement of his judgment. They were under no such obligation, but had the right to resist its collection in every proper and legitimate way. The mere allegation that the defendants conspired or confederated together is of no consequence, unless it farther appears that they so did to do an unlawful act, or a lawful act in an unlawful manner. McHenry v. Sneer, 56 Iowa, 652, 10 N. W. 234; Kelly v. Ry., 93 Iowa, 452, 61 N. W. 957. And to maintain a civil action for damages something in pursuance of the conspiracy must have been done, occasioning injury from which the damages have proximately resulted. 6 Am. & Eng. Ency. of Law, 874. A cause of action unless something is done which, without the conspiracy, would give a right of action. Beechley v. Mulville, 102 Iowa, 611, 71 N. W. 107, 71 N. W. 428, 63 Am. St. Rep. 479; De Wulf v. Dix, 110 Iowa, 559, 81 N. W. 779. As tersely remarked by Judge Knowles in Philbrook v. Newman (C. C.) 38 Fed. 140, "It is not wrong for a man to conspire with others to do a legal and proper act." Now, the prevention of the enforcement of a judgment is no wrong, unless accomplished by illegal means. While there is a diversity of opinion as to whether a conspiracy to remove or conceal property so that it may not be reached by legal process is actionable, the decided weight of authority is to the effect the injury is too remote and uncertain for estimation. Moody v. Burton, 27 Me. 427, 46 Am. Dec. 612; Adler v. Fenton, 24 How. 407, 16 L. Ed. 696; Wellington v. Small, 3 Cush. 145, 50 Am. Dec. 719; Hall v. Eaton, 25 Vt. 458; Green v. Kimble, 6 Blackf. 552; Smith v. Blake, 1 Day, 258. See 6 Am. & Eng. Enc. of Law, 878. In such a case the creditor has lost no claim to or interest in or lien on the property of the debtor, because he had acquired none to lose. "The most that can be said," as was observed in Lamb v. Stone, 11 Pick. 527, "is that he intended to attach the property, and the wrongful act of the defendant has prevented him from executing his intention." The law accurately defines how and when the debtor's property ceases to be subject to his control and disposition, and becomes subject to the claims of the creditor. Until a lien has attached in the manner pointed out by statute, giving the creditor a specific right in the property, the dominion of the debtor as owner continues, with the perfect legal right to convert into another species or alienate altogether. In some circumstances the property may be followed, but no cause of action for damages can arise in favor of the creditor by reason of the transfer of something he never had. Even if it did, it would be impossible to fix upon any measure of damages at all satisfactory. In the language of Moody v. Burton, supra: "The plaintiff had obtained no lien on the property conveyed by attachment, judgment, or in any other manner. Had he special property in or claim to it? The only proof of loss or injury which he could make would be that his debtor had fraudulently conveyed his property without having received any value for it, and with the intent to avoid the payment of his debt, and that he had no other means of obtaining payment. All other creditors could make the same proof. Upon such proof he could not be entitled to recover the amount of his debt, for that is still subsisting, and it may yet be collected. Nor could he be entitled to recover the amount of the property conveyed, for to that he had no better claim than other creditors. He has not, therefore, lost it. If it had not been fraudulently conveyed, it was as probable that

Digitized by Google

ght have disposed of it fairly, and for a luable consideration, or have lost it by ac- lent or misfortune. The only loss or injury own by the proof would be that he had en deprived of a chance or possibility of taining payment from that property. This ould be stating his loss or injury too strong- for he would still have the chance of at- ching or securing it or its proceeds in the nds of the fraudulent holder. A jury would en be authorized to estimate the value of ly his chance to secure it and have it ap- ed to the payment of his debt while in the nds of his debtor; for this only has he lost. ere would be no data, tables, or other means orded by which such a chance could be es- nated. The loss or injury would be too un- rtain and remote for legal estimation." ese objections to the maintenance of such action are not met by the decisions to the ntrary. See Mott v. Danforth, 6 Watts, 304, Am. Dec. 468. And it follows that the al- gation of a conspiracy to defeat the collection the judgment did not state an actionable rong. It is only when it is proposed to ac- mplish this by illegal means, as in Findlay McAllister, 113 U. S. 104, 5 Sup. Ct. 401, L. Ed. 930, where the defendants, by reats and menaces, deterred persons from dding on property, and persuaded the tax- yers not to submit to a tax levied in pur- ance of a writ of mandamus, thereby fraud- ently and maliciously obstructing and de- ating the process of the courts. In such a se there must be a remedy, else an organ- ed band of conspirators might defeat and nder nugatory the judgments of courts. See, so, Adams v. Paige, 7 Pick. 542. Unless, en, the means alleged are to be condemned, e defendants ought not to be held account- le for what plaintiff was not able to collect rough the process of the court. It is first leged that in her answer as garnishee, taken the officer serving the notice, Mrs. Lohr ncealed something; but what it was is not sclosed, save in the recital, "having so swered as garnishee as to create the convic- n that the title to the realty levied upon by e plaintiff had not passed to her at the time the levy of the execution upon it." This, wever, is merely the pleader's conclusion, awn from the answer as heretofore quoted. is not claimed that she misstated the facts ncerning the purchase of the premises, but, we understand the argument, omitted to ate what had been done under the contract the way of taking possession. But the tutory questions called merely for the par- ulars concerning the debt, and these were ven. By no fair construction ought a gar- hee to be held to also disclose at his peril at has been done with the property in the rchase of which the indebtedness sought to reached was created. Moreover, under our tute part payment of the purchase price sent of the vendor. Certainly the garnishee's answer was enough to put the judgment holder upon inquiry as to the sale of the property, and, had he desired further information, it should have been obtained by taking her answer at the next term of court to which she was ordered to appear. It is said, however, that, but for the fact that Hoffman was acting for Mrs. Washburn as well as Mrs. Lohr, the latter would have more fully answered, and might have deposited the purchase price in the hands of the clerk of court. It is enough to say that the garnishee was under no obligation to so deposit the money owing Mrs. Washburn, and it is none of plaintiff's concern that counsel served both clients. Their interests were not necessarily inconsistent; but, even if they were, and he proceeded with their full consent, it furnished no ground of complaint to plaintiff. Without fault on the part of defendants, the plaintiff elected to enforce his judgment against the premises, and, by bidding in the property for the full amount thereof and all costs, abandoned the garnishment proceedings. The return of the execution satisfied the judgment of record, and upon motion of Hoffman Mrs. Lohr was discharged as garnishee. This was without notice to plaintiff, but none was essential, as he had voluntarily made the record exacting such an order by the court. Whether the record ipso facto worked her discharge need not now be considered. Besides, it is not claimed that plaintiff had any purpose of resisting or was prevented from doing so. But it is argued, though not alleged, that in procuring the discharge of the garnishee Hoffman had in mind the purpose of bringing an action to set aside the sheriff's sale, and knew it did not convey the property, and hence that the garnishee was liable but for the satisfaction of the judgment by the sale of the realty. Neither he nor his clients were under obligation to aid or advise their adversary, who, with knowledge which appeared to be satisfactory, elected to proceed against the realty. The record made by plaintiff was presented to the court, and it was not part of Hoffman's duty to point out the mistakes he had made. Even had he declared his purpose of attacking the sale, this would not have furnished a sufficient reason for refusing to release the garnishee. Moreover, it was mere matter of opinion, and the petition avers no material facts within Hoffman's knowledge not possessed by the plaintiff at the time of his election. This being true, he concealed nothing save what he proposed to do in the future, and that he was not required to disclose. The discharge left her free to pay the balance of the purchase price, and, having done so, in the absence of any misrepresentation, we know of no reason for denying her the right to assert title as against the sheriff's sale. Manifestly her attorney was securing every legal advantage

Digitized by Google

himself in promoting the plaintiff's efforts to collect his claim. It would be strange doctrine to say that one may not avail himself of the mistakes of his opponent. This is the sum total of the accusations lodged against the defendants. The averments with respect to the dismissal of the appeal have no bearing on the discharge of Mrs. Lohr as garnishee, and for this reason demand no consideration. Accepting the averments of the petition relating to the discharge of the garnishee as true, we think no cause of action is stated. But appellant urges that the fund in the hands of Jayne & Hoffman should be sequestered to the payment of his debt. The trouble is, he has acquired no lien whatever thereon, and it cannot be reached through proceedings of this character. The statutes point out the manner of attaching such a fund, and, as that is wholly adequate, the remedy by equitable proceedings is not available. The mere fact that it might elude ordinary proceedings is not good ground for going into a court of equity, and especially in the absence of any averment that the judgment cannot be enforced against other property of the judgment defendant.

The demurrer was rightly sustained, and the ruling is affirmed.

MANKER v. PHŒNIX LOAN ASS'N OF ST. JOSEPH et al.

(Supreme Court of Iowa. Oct. 21, 1903.)

MORTGAGES—CANCELLATION—LOAN ASSOCIATIONS — RECEIVERSHIP — DECREE AGAINST RECEIVERS—LEAVE TO SUE.

1. Where, in a suit to cancel certain mortgages executed to an association, it does not appear that it has ceased to exist, or that it no longer has an interest in the subject-matter, the court having jurisdiction may determine the rights of the parties against the association, though a general receivership is pending.

2. Where, in a suit to cancel certain mortgages executed to an association, a general receivership is alleged, without any averment that authority to sue the receivers had been obtained, a decree against them is unauthorized.

Appeal from District Court, Taylor County; H. M. Towner, Judge.

With the action above entitled is submitted the case of John Wyckoff against the same defendants. Each action was brought in equity, the object thereof being to recover judgment on account of moneys paid as usurious interest, and to have a decree canceling certain evidences of indebtedness and real estate mortgages securing the same, all such having been given to the defendant association. In each case H. M. Tootle and W. P. Graham, receivers of said association, are named as defendants in the title, and in the body of the petition it is said they are receivers of the association. No further reference to them by name is made therein. In the Manker case, the answer is by the defendants generally, no reference being Wyckoff case the receivers alone answer. The cases were tried together in the court below, and there was decree in favor of the respective plaintiffs. From the decree in each case, the defendants appeal. Reversed in part. Affirmed in part.

Flick & Jackson, S. W. Swabey, and Vinton Pike, for appellants. Haddock & Sons, for appellee.

BISHOP, C. J. After the case was docketed in this court, and at a previous term, the bill of exceptions, as contained in appellants' abstract, was stricken out on motion of appellee. We have before us accordingly nothing but the respective pleadings and the decrees. The specific defense presented in each case is that the defendant is a building and loan association authorized to transact business in this state; that plaintiffs were members and stockholders of such association, and as such obtained the loans upon which the payments alleged were made; that the rate of interest charged was not usurious. In each action a counterclaim was filed setting forth the making of the note, and mortgages securing the same, alleging that the same were unpaid, and demanding foreclosure. By the decree in each case, it is found that the defendant association was not a building and loan association in fact, and was not authorized to transact business in this state as such; that the rate of interest paid by plaintiffs was usurious; and that the indebtedness due to the association had been fully paid. Cancellation of the respective mortgages was accordingly ordered. Such being the full extent of the record we are authorized to consider, and following the general rule, we must assume that the findings in the decrees had ample support in the evidence, and, as against the defendant association, at least, such decrees are entitled to be upheld. The mortgages, it will be observed, were given to the association, and the actions were properly brought against it. There is nothing before us from which we can say that the association has ceased to exist as such, or that it no longer has an interest in the subject-matter of the actions; and this being the case, and the court having jurisdiction of the subject-matter, there is no reason why the decrees should not have been entered, fixing and determining the rights of the respective plaintiffs as against the association. And this is true, admitting the receivership, and that it was general in character. In Weigen v. Council Bluffs Ins. Co., 104 Iowa, 410, 73 N. W. 862 (an action upon a policy of insurance), it was urged as a defense that a receiver had been appointed for all the property of the company, and we said: "There is no allegation that the corporation has been dissolved, or that the court, in appointing the receiver, enjoined it from exer-

¶ 2. See Receivers, vol. 42, Cent. Dig. §§ 334, 362.

Digitized by Google

and those of the defendant were restrained only by depriving it of its property. The right to sue and be sued, conferred by the statute, was retained."

But it is insisted in argument by counsel for appellants that the decrees should not be allowed to stand as against the receivers, for that it does not affirmatively appear that authority to sue such receivers had been obtained, and that in the absence of such affirmative showing the decrees against them must be held invalid, and should be set aside. Now, we have the simple allegation upon the part of the respective plaintiffs that certain persons named are the receivers of the defendant association. It is not alleged how they became so, nor are we advised by the pleading of the character or extent of their powers. In the Manker case the answer admits the allegation as to the appointment of the receivers, and no further reference is made to them. In the Wyckoff case the answer alleges the appointment of the receivers, and the court by whom appointed. In the decree the receivers are not referred to by name. It is said simply that the defendants appeared. There is a finding that the transactions in question were usurious, and that the indebtedness has been paid. The order is that the mortgages be canceled of record, and that plaintiff have judgment against defendants for costs. How the alleged receivers were brought into court—whether upon notice, or if they came in by voluntary appearance—it does not appear. Such being the record, we think we are warranted in assuming, as against appellees, that the receivership was a general one, involving the entire property of the association; and this in view of the fact that the receivership is alleged by them, thereby suggesting that they are necessary or proper parties, but without advising the court of the character or extent of their powers. And we are agreed with counsel for appellants that leave to sue a receiver is a jurisdictional fact, which must be alleged and proved. This conclusion finds support in the following authorities: Porter v. Sabin, 149 U. S. 479, 13 Sup. Ct. 1008, 37 L. Ed. 815; Barton v. Barbour, 104 U. S. 126, 26 L. Ed. 672; Texas, etc., v. Cox, 145 U. S. 601, 12 Sup. Ct. 905, 36 L. Ed. 829; Brown v. Rauch (Wash.) 20 Pac. 787; Keen v. Breckenridge, 96 Ind. 69; Adams v. Trust Co., 66 Fed. 620, 15 C. C. A. 1; Avery v. Trust Co. (C. C.) 72 Fed. 704; Neun v. Ass'n, 149 Mo. 80, 50 S. W. 436; Smith on Receivers, 83, and note. A receiver is but an officer of the court by whom he is appointed—as it is sometimes said, the right hand of the court. His custody is that of the court, and it follows that, being a mere custodian, he cannot act, save as he may be specially authorized. Accordingly, he may not enter into litigation respecting

Brown v. Rauch, supra, a receiver "has no right to take a step or do an act, the result of which would be to defeat the object of his appointment, or embarrass the court in the administration of the trust property. The very object of the rule in question is to enable the court to keep the trust property at all times within its control. This it could not do if the receiver might be sued without its leave, or perhaps without its knowledge, in any other court or jurisdiction." And further, that the law of comity among courts, whether of the same or a different state or jurisdiction, requires that leave should be asked and granted before suit against a receiver, see the following additional authorities: Smith v. Railway, 151 Mo. 402, 52 S. W. 378, 48 L. R. A. 368; Keen v. Breckenridge, 96 Ind. 69; Central Trust Co. v. Railway (C. C.) 59 Fed. 523; Haag v. Ward, 89 Mo. App. 186.

It follows that, as far as affecting the receivers named, the decree was unauthorized, and to that extent it is reversed. As to the defendant association, the decree is affirmed. Reversed in part. Affirmed in part.

BRIER v. DAVIS.

(Supreme Court of Iowa. Oct. 22, 1903.)

FRAUD—EVIDENCE—CONTENTS OF WRITINGS—TRIAL—SPECIAL INTERROGATORIES—INSTRUCTIONS.

1. Where letters concerning a sale, written by defendant, were received and discussed by plaintiff and his family, on proof of their loss testimony as to the substance of the communications was competent in a suit for damages for fraud in the sale.
2. Error cannot be predicated on the court's refusal to entertain a general objection that testimony offered is incompetent and immaterial.
3. Special interrogatories to the jury, calling for findings on several distinct propositions, and tending to confuse, are properly refused.
4. Where, in an action for fraud and misrepresentation in the sale of property, the damages recoverable result from the misrepresentations as a whole, special interrogatories calling for findings on particular items of damages must be refused.
5. Requested instructions which are covered by the charge are properly refused.

Appeal from District Court, Linn County; W. N. Treichler, Judge.

Action at law for damages on account of fraud and misrepresentation in the sale of certain mill property. Verdict and judgment for plaintiff, and defendant appeals. Affirmed.

Chas. W. Kepler, for appellant. Farber & Johnson and Hubbard, Dawley & Wheeler, for appellee.

WEAVER, J. Thomas Davis, of Central City, Iowa, was the owner of a mill in that town. His cousin Thomas F. Davis,

Digitized by Google

property, or some part of it, foreclosed the same, and obtained a sheriff's deed. Between the date of the sheriff's sale and the delivery of the deed, William Brier, father of plaintiff, desiring to purchase a mill for his son, applied to Thomas Davis, who, it is claimed, pointed out to Brier the boundaries of the property, including the mill and dam, and lands bordering the river on either side. The parties were not able to agree on the terms, and Brier returned to his home. Later, and apparently after the sheriff's deed had been delivered, Brier heard that Thomas F. Davis was the owner of the property, and upon application to him a sale and conveyance were effected for the sum of $3,000. It is the claim of plaintiff that, on being applied to for the purchase of the property, Thomas F. Davis stated and represented, in substance, that he owned, and would sell and convey for the price mentioned, all the premises included in boundaries pointed out by his cousin Thomas Davis, and that plaintiff and his father, not being acquainted with the descriptions made use of in the deed, accepted the conveyance in the belief that it embraced the entire mill property, as designated by the said Thomas Davis. It is further charged that the deed, as made and delivered by Thomas F. Davis, does not include or convey the milldam or water power upon which the operation of the mill depends, and does not convey other lands pointed out by Davis, whereby the property conveyed is rendered practically worthless. Other misrepresentations are charged, but the controversy turns chiefly upon the one to which we have referred.

1. Error is assigned upon the ruling of the trial court in admitting testimony as to the contents of certain letters written by the defendant. Standing alone, some of the rulings in this respect may fairly be held objectionable; but the matters thus developed, in the main, seem to have been admitted at another stage of the trial without objection. Other rulings in relation to the letters were correct. These letters were received in the family of which plaintiff was a member, and were read by some of them, and listened to and discussed by all; and, upon proof of the loss of the writing, we see no reason why the witnesses were not competent to state the substance of the communications. Numerous other objections are raised to the testimony offered by the plaintiff, but it is impracticable to discuss them in detail. Of many of these objections it may be said they are not sufficiently specific to raise the questions argued in this court. The sweeping assertion that testimony is "incompetent and immaterial," or "irrelevant, incompetent, and immaterial," does not apprise the court of the precise point upon which counsel relies, and error cannot be predicated upon the refusal of the court to entertain it. Jones on Evidence, 897. Waiving the point, however, we have examined and find no error in the rulings.

2. The defendant asked the court to submit special interrogatories to the jury as follows: "(1) If you find that defendant sold to plaintiff more land than described in his deed, state the description of the land, and also its value. (2) If you find that plaintiff is entitled to recover anything against the defendant, then state in answer to this interrogatory the amount you find: First. What amount on claim for defective roof? Second. What amount on claim for damage because the mill could not earn as much per day as represented by the defendant? Third. How much do you find for insufficient water power?" These requests were refused, and the ruling is, in our judgment, correct. Both interrogatories are compound, calling for findings on several distinct propositions, and thereby tend to confuse the jury. Neither do they call for the ultimate facts upon which plaintiff's right of recovery depends. No claim is made that defendant sold more land than he conveyed, but that he pointed out or designated lands which the conveyance does not include. The damages claimed by plaintiff cannot be apportioned or itemized, and, if he is entitled to recover, it is for the damages resulting from the defendant's misrepresentations as a whole, and not for the aggregate of distinct and independent items on account of various misrepresentations considered severally. Appellant also asked 11 different instructions, which were refused. Some of these instructions stated correct and pertinent propositions of law, but the charge given by the court appears to cover the same ground. The several paragraphs of the charge, taken together, contain a sufficient and correct statement of the law of the case.

3. The legal propositions advanced by counsel on either side are mostly of an elementary character, and we have, therefore, not entered upon any discussion of them. The controversy is essentially one of fact, and the only serious question is whether the alleged misrepresentations have been sufficiently sustained by the testimony. In our judgment, however, there is not such a lack of support for the verdict as will permit us to interfere.

We find no reversible error, and the judgment of the district court is affirmed.

BLACK v. MINNEAPOLIS & ST. L. R. CO.

(Supreme Court of Iowa. Oct. 23, 1903.)

RAILROADS—FIRES ALONG RIGHT OF WAY—DESTRUCTION OF MEADOW—MEASURE OF DAMAGE—EVIDENCE—KILLING OF STOCK—DOUBLE DAMAGES—CONCESSIONS BY COUNSEL — NOTICE — SUFFICIENCY—AFFIDAVIT — JURAT.

1. In an action against a railroad company for damages caused by burning a part of a meadow adjacent to the right of way, the measure of damages was the cost of reseeding and the rental value of the land during the time it was rendered unproductive for the purpose for which it was being used, as shown by evi-

Digitized by Google

dence of what portions of the land not burned actually produced, and not the general rental value of land in that vicinity.

2. In an action against a railroad company for the burning of a meadow, the jury were properly allowed to add interest to the damages which they found plaintiff sustained at the time of the fire.

3. In an action against a railroad company for the burning of certain hay located some distance from the track, evidence that other engines than the one which was claimed to have set the fire had been seen to throw sparks nearly as far as the hay was from the track was admissible, it appearing that all the engines were in substantially the same condition.

4. In an action against a railroad company for setting fire to hay near the track, evidence that within a few minutes after the passing of defendant's locomotive, and while a strong wind was blowing from the direction of the track towards the hay, it was first discovered to be on fire, was sufficient to justify a finding that the hay was set on fire by sparks from the locomotive.

5. In an action against a railroad company for killing a steer on the track, a concession of plaintiff's counsel that plaintiff was not entitled to recover double damages under the statute did not estop him from afterward claiming double damages, the right thereto growing out of the statute, and not requiring any evidence other than that required to establish a cause of action, so that defendant was not prejudiced by the withdrawal of the concession.

6. Code, § 2055, provides that double damages are to be allowed against a railroad company for killing stock if the company fails to pay for the stock within 30 days after notice in writing that the loss or injury has occurred, etc. A notice of the killing of stock was addressed to the M. & St. L. "Railway" Company, while the name of the corporation was the M. & St. L. "Railroad" Company, the name given in the notice being the name of a predecessor of the defendant which had formerly owned the same line of road. The notice, however, was actually served upon and brought to the personal attention of the proper officer of the defendant company, and the affidavit referred to the M. & St. L. "R. R." Company, and stated that the stock was killed by said "railroad" company. *Held*, that the notice was not insufficient because using the term "railway" instead of "railroad."

7. The court will take judicial notice that the person whose name appears to a jurat was a notary public in and for the county named, and will presume that he acted within the county of his jurisdiction.

8. It is not essential that the jurat state that an affidavit was sworn to in the presence of or before the notary who verifies the fact; that will be presumed from the statement that the affidavit was sworn to.

9. In an action against a railroad company for the killing of stock, in which plaintiff claimed double damages under the statute (Code, § 2055), defendant's tender to plaintiff of a certain sum, which plaintiff claimed to be the value of the stock, was sufficient evidence of the value of the stock to form a basis for the recovery of double damages.

Appeal from District Court, Webster County; J. H. Richard, Judge.

Action to recover on four distinct causes of action, viz.: Damage to plaintiff's meadow caused by a fire set out by defendant's locomotive; destruction of certain hay by a fire set out at another time by defendant's locomotive; the killing of a steer by defendant's locomotive on its track at a place where defendant had a right to fence, the steer having come upon the right of way at such place by reason of a defective and insufficient cattle guard; and the similar killing of certain pigs which came upon defendant's right of way by reason of insufficiency of defendant's fence. Verdict and judgment for plaintiff. Defendant appeals. Affirmed.

R. M. Wright, for appellant. Kenyon & O'Connor, for appellee.

McCLAIN, J. 1. As to the injury to the meadow, the sole question is one of measure of damages. A fire set out by defendant's engine in September burned over about eight acres of wheat stubble, among which grass was growing as the result of the sowing of grass seed with the wheat. But for the fire this grass would, it appears, have furnished pasture during the fall, a hay crop during the next summer, and further pasture after the cutting of the hay during the following fall; and witnesses testified that, although the land was reseeded in the spring following the fire there was no hay crop for that summer, nor pasturage during the following fall. The court instructed the jury that they might allow, as damages for the injury to the meadow, the actual cost of reseeding, and the fair and reasonable rental value for the time necessary to restore the meadow, during which the land was unproductive as a meadow as the result of the fire, less the fair and reasonable value of the use, if any, which plaintiff could have made of the land without interfering with its restoration as a meadow; and the jury by a special finding fixed the damage at $150. It appears from the evidence that the cost of reseeding was $10, the loss of pasturage for the two seasons was $20, and that, on the basis of what other portions of land in a similar situation and under similar conditions produced in hay during the season following the fire, the rental value of the eight acres for the purpose of raising hay would have been $120, although it appeared by other witnesses that the rental value of the land for ordinary purposes was not to exceed $3 per acre. The contention of counsel for appellant is that the court erred in allowing the introduction of evidence with reference to what the land would have produced in hay during the season if it had not been burned over, based on what other portions of the land constituting the meadow did actually produce, and in so instructing the jury as to allow them to take into account the amount of injury suffered, estimated on this basis. It is urged that the loss must be measured by the condition of the meadow at the time of the fire, and that it could not then be determined what the value of the prospective hay crop was; and therefore the rental value in general, and not the rental value as determined by what the balance of the meadow should actually produce, would be the measure of the loss.

¶ 2. See Damages, vol. 15, Cent. Dig. § 139.

Digitized by Google

fundamentally erroneous view as to the measure of damages in such cases. While it is true that the mere prospective use of land for a specific purpose, and the profits which would actually have resulted from such use, cannot be taken into account (Chicago v. Huenerbein, 85 Ill. 594, 28 Am. Rep. 626), yet, where the land has been appropriated to a particular use, as by converting it into an orchard or a meadow, or planting it to a crop which is already growing at the time of the injury, the loss must be determined with reference to such existing condition. Rowe v. Chicago & N. W. R. Co., 102 Iowa, 286, 71 N. W. 409; Lommeland v. St. Paul, M. & M. R. Co., 35 Minn. 412, 29 N. W. 119; Bradley v. Iowa Cent. R. Co., 111 Iowa, 562, 82 N. W. 996; Graessle v. Carpenter, 70 Iowa, 166, 30 N. W. 392; Krejci v. Chicago & N. W. R. Co., 117 Iowa, 344, 90 N. W. 708. "A meadow is in the nature of a permanent improvement, and is not like annual crops. Its value is largely based upon the fact that it possesses this character, and is not to be planted each year." Vermilya v. Chicago, M. & St. P. R. Co., 66 Iowa, 606, 616, 24 N. W. 234, 55 Am. Rep. 279. As to the competency of the evidence with relation to what was actually produced during the season in question on other portions of the meadow of like character and under similar conditions, appellant's objections are not well taken. It must be borne in mind that this is an action for tort, and that the damage recoverable is not what the defendant might have anticipated as the consequence of the injury, but that which follows as the natural and proximate result of the injury, and it was competent to show by the best evidence obtainable what the meadow would probably have produced had the injury not occurred. It was, therefore, competent to show what the product of the other portions of the meadow not injured actually was. Wolcott v. Mount, 36 N. J. Law, 262, 13 Am. Rep. 438; Chicago & R. I. R. Co. v. Ward, 16 Ill. 522; Passinger v. Thorburn, 34 N. Y. 634, 90 Am. Dec. 753; Flick v. Wetherbee, 20 Wis. 392; White v. Miller, 71 N. Y. 118, 27 Am. Rep. 13; Jones v. George, 61 Tex. 345, 48 Am. Rep. 280; Railway Co. v. Yarborough, 56 Ark. 612, 20 S. W. 515; St. Louis, I. M. & S. R. Co. v. Lyman, 57 Ark. 512, 22 S. W. 170; Randall v. Raper, F. B. & E. 84, Eng. Com. L. 82. Some of these cases, it is true, relate to damages for loss of crop due to defective seed sold to the person planting the crop, and therefore involved breach of warranty rather than tort. But to authorize recovery in an action for breach of contract, the injury must be the natural and proximate result of the breach, and to this extent the measure of damage is the same as in an action for tort. Of course, the rule for measuring damages in actions for breach of contract may exclude damages which would be recoverable in case of tort, because not within the reasonable contemplation of the parties, but the measure is the natural and proximate result of the wrong, and does not involve the question as to what damage was within the contemplation of the parties, we see no reason why it should not be the same in each class of cases. The rule excluding profits which are speculative and uncertain has reference rather to the matter of proof than to the measure of damage, and, where there is competent evidence as to the loss of profits, such loss may be taken into account. Hichborn v. Bradley, 117 Iowa, 130, 90 N. W. 592.

What the plaintiff actually lost in this case was the pasturage and the hay crop, and, as there was competent evidence as to what the burned portion of the meadow would actually have produced, the rental value of the land as meadow for the season during which plaintiff was deprived of its use, for the purpose of raising a crop of hay thereon, might be determined by the jury and taken into account in fixing the damage. In this connection it is proper to notice a complaint that the court authorized the jury to allow interest at 6 per cent. on the damage to the meadow as found above. It is true that the damage was unliquidated, and plaintiff is not entitled as a matter of law to interest. But it is well settled that, in estimating even unliquidated damages, the jury may take into account interest on the sum found necessary to compensate the plaintiff for the injury suffered at the time of the loss, on the theory that such interest is a part of his damage. Richmond v. Dubuque & S. C. R. Co., 33 Iowa, 422, 502; Frazer v. Bigelow Carpet Co., 141 Mass. 126, 4 N. E. 620; Richards v. Citizens' Nat. Gas Co., 130 Pa. 37, 18 Atl. 600; Lincoln v. Claflin, 7 Wall. 132, 139, 19 L. Ed. 106. As the verdict of the jury was with reference to the money loss sustained by the plaintiff at the time of the fire, they were properly told that they might, as an element of damage, include interest on the amount of such loss.

2. As a distinct cause of action against the defendant, plaintiff alleges the destruction of certain hay and a hayrack on plaintiff's land, which were destroyed by fire communicated thereto by sparks from a locomotive operated on defendant's road. With reference to this item, the only controversy is as to the evidence relied on as showing that sparks from the locomotive set the fire which resulted in the destruction of the hay and rack. There being some evidence that the hay was situated 106 feet from the defendant's track, witnesses testified that it was impossible for fire to be communicated by sparks carried that distance. On the other hand, witnesses were allowed, over defendant's objection, to testify that they had seen engines of the defendant throw sparks to the distance of 100 feet, such testimony relating to other engines than the one supposed to have emitted the sparks which set the fire. But, as there was evidence that all the

Digitized by Google

tion, this testimony was admissible.

It is also contended that there is no evidence whatever that the hay was set on fire by sparks from the locomotive of defendant. But witnesses for the plaintiff did testify that within a few minutes after the passing of defendant's locomotive along the track, and while a strong wind was blowing from the direction of the track towards the hay, the hay was first discovered to be on fire. From this evidence the jury was justified in finding that the hay was set on fire by sparks from the locomotive. Greenfield v. Chicago & N. W. R. Co., 83 Iowa, 270, 49 N. W. 95.

3. With reference to the recovery for killing the steer on defendant's track, at a place where it had a right to fence, the contention of appellant is, in the first place, that it appeared the steer came upon the inclosed right of way over the cattle guard, and that there is no competent evidence that the cattle guard was out of order. Without setting out the evidence, we are constrained to say that there was competent testimony to show that the cattle guard was out of order and ineffective, and it was for the jury to determine whether the defective condition of the cattle guard was the occasion of the steer's being on the inclosed portion of the right of way.

It is further urged, however, with reference to this cause of action, that the attorney for plaintiff conceded, during the trial, that there was no right to recover double damages in such case, and it appears that such concession was made of record. But as the right to recover double damages under such circumstances depended upon the construction of the statute, and not upon any facts which it was necessary to prove beyond those which were proved, to wit, the killing of the animal, the defective cattle guard over which the animal came upon the inclosed right of way, and the giving of the statutory notice, we cannot see that this concession of counsel was in any way material. Plaintiff's counsel was not estopped from urging, later in the progress of the case, that, as matter of law, on the evidence introduced, plaintiff could recover double damages; and the court was therefore justified, on the motion of plaintiff, in adding to the verdict of the jury a sum equal to the actual value of the animal as found by the jury in answer to a special interrogatory. That a concession of counsel, inadvertently made, may be withdrawn where the opposite party is in no way prejudiced thereby as to the determination of the facts, is well settled. Prescott v. Brooks (N. D.) 94 N. W. 88; St. Louis & S. F. R. Co. v. Apperson, 97 Mo. 300, 10 S. W. 478.

4. Finally, with reference to the recovery of double damages for the killing of plaintiff's pigs, the only controversy is as to the sufficiency of the statutory notice, under the provisions of Code, § 2055. Under that section double damages are to be allowed if the company fails or neglects to pay the value of the stock killed "within thirty days after notice in writing that the loss or injury has occurred, accompanied with an affidavit thereof, served upon any officer or station or ticket agent employed by said corporation," etc. The first objection to the notice is that it misdescribes the defendant, being addressed to the Minneapolis & St. Louis "Railway" Company, instead of to the Minneapolis & St. Louis "Railroad" Company, and counsel for appellant argues that this was a material misdescription, because there has been such a corporation, the predecessor of the defendant in the ownership of this same line of road. But the notice was actually served upon and brought to the personal attention of the proper officer of the defendant company, and we are not willing to hold that the defendant was justified in ignoring that notice on account of a slight inaccuracy in designating such company. The affidavit and notice are to be taken together. Mendell v. Chicago & N. W. R. Co., 20 Iowa, 9. The notice described the location of the right of way where the animals were killed, with reference to the section of land through which it is located, and also as running through plaintiff's farm. In the affidavit the "bed" of the "M. & St. L. R. R." is referred to, and it is stated that the pigs were killed by said "railroad company." The notice and affidavit were clearly sufficient under the statute. At the beginning of the affidavit the venue is given, "State of Iowa, Webster County, ss.," and at the end, after the signature of plaintiff, the jurat, as originally attached, was as follows: "Subscribed and sworn to by J. B. Black this 22nd day of June, 1901. Maurice O'Connor, (seal) Notary Public." It is urged that this jurat is not sufficient, because it does not show in whose presence or before whom it was sworn to, nor that the person signing it as notary public was a notary in and for the county within which it was sworn to. But these objections are without any merit. The court takes judicial notice that the person whose name appears to the jurat was a notary public in and for the county named, and it presumes that he acted within the county of his jurisdiction. Stoddard v. Sloan, 65 Iowa, 680, 22 N. W. 924; Stone v. Miller, 60 Iowa, 243, 14 N. W. 781. It is not essential that the jurat state that the affidavit was sworn to in the presence of or before the notary who verifies the fact by his certificate, That fact is presumed from the official statement that the affidavit was sworn to. Hosea v. State, 47 Ind. 180; Trice v. Jones, 52 Miss. 138; Commonwealth v. Keefe, 7 Gray, 332; Clement v. Bullens, 159 Mass. 193, 34 N. E. 173; 2 Cyc. 28. A similar presumption is entertained when the jurat fails to state by whom the affidavit was signed and sworn to. Briggs v. Yetzer, 103 Iowa, 342, 72 N. W. 647. The notice and affidavit were therefore sufficient to sustain the recovery of double damages by the plaintiff for the value of the stock killed.

It is further contended, with reference to the pigs, that there was no evidence of the value on which to predicate the recovery of

Digitized by Google

answer, relating to th
averred that defendar
tiff the sum of thirty
plaintiff claims to be
and it denies each an
in the said count o
tained." And couns
opening statement, s
and tender Mr. Blac
claim that the pigs
himself places upon
five dollars." Couns
to be that, while th
of the necessity of
pigs for the purpose
ages, it did not affc
ery of double dam
is so subtle that we
it. The plaintiff is
provided he show
affidavit, and failu
to pay within 30
is sufficient to est
pose of recoverin
no more evidence
order to entitle
damages. A pa
during trial, eve
tender, operates
and admits so n
Ye Seng Co. v. C
The judgment

CONNECTICU
CO. v
(Supreme Cour
SECOND AF
1. When a ca
a second appeal
in the adjudica
be re-examined
Commission
3. Appeal f
County; Ada
"Not to be
Action by
Deposit Com
others. Judg
ants appeal.
Flansburg
P. A. Black,
appellee.

AMES, C.
the district
foreclosure
trial in tha
a judgment
upon an ap
being unsu
cause was
facts are
Neb. 166,
in the dis
the bill of
the record

Digitized by Google

in accordance with this opinion.

WOODMEN ACCIDENT ASS'N v. HAMILTON.

(Supreme Court of Nebraska. Oct. 7, 1903.)

ACCIDENT INSURANCE—ACTION ON POLICY—PLEADING—EVIDENCE.

1. An allegation of settlement of all claims which a certificate holder in an accident association "had or might have" against the association, which makes no express reference to the beneficiary, nor to future accruing claims, will be *held*, on demurrer by the beneficiary, who is suing for indemnity for the subsequent death from the same accident of the certificate holder, to refer only to the then accrued claims for disability, and not to the subsequent death of the insured, and to state no defense to the death claim, beyond the amount of the payment alleged.

2. Evidence *held* to support verdict that death resulted from accident, as claimed.

(Syllabus by the Court.)

Commissioners' Opinion. Department No. 1. Error to District Court, Cedar County; Graves, Judge.

Action by Helen Hamilton against the Woodmen Accident Association. Judgment for plaintiff. Defendant brings error. Affirmed.

Talbot & Allen, for plaintiff in error. A. L. Beardsley and A. M. Gooding, for defendant in error.

HASTINGS, C. In this action on a certificate of accident insurance issued by the Woodmen Accident Association to the late Dr. Hamilton, of Coleridge, Neb., two grounds for the reversal of a judgment in favor of the plaintiff below are alleged in this court—one, that the court below erred in sustaining a demurrer to paragraphs 5 and 6 of the association's amended answer; and the other, that the evidence is not sufficient to support the verdict.

Paragraphs 5 and 6, to which demurrer was sustained, are as follows:

"Fifth. Further answering, this defendant alleges that said Augustus Hamilton, while said certificate of insurance was in full force and effect, and on the 26th day of March, 1900, received an accidental injury, within the provisions and terms of said certificate sued on; that in the due course of time, and in accordance with the provisions and terms of said certificate, said Augustus Hamilton presented to this defendant his proofs of injury in support of his claim for damages covering the injury which occurred to him on said date; that in said claim and proof for said injury said Augustus Hamilton claimed a greater sum than $37.50, and the defendant denied such liability, but claimed that he, the said Augustus Hamilton, was entitled to a less sum on account of said injury, but, as a full and complete settlement and satisfaction of any and the defendant on account of said injury received by him on the 26th day of March, 1900, the said defendant paid said Augustus Hamilton on the 22d day of May, 1900, the sum of $37.50, which said sum said Augustus Hamilton received in full satisfaction and accord, and in full settlement of all claims he had or might have against said defendant on account of said injury; that any and all claims that could lawfully be urged against this defendant association by Augustus Hamilton, deceased, or any other person, was then and there by said payment of said money, and the giving of the receipt therefor, fully liquidated, settled, and paid; and that any and all liability of this defendant association on account of said injury received by said Augustus Hamilton on the 26th day of March, 1900, or the resulting consequences thereof, was fully settled, adjusted, and paid by the payment to said Augustus Hamilton of said $37.50 aforesaid.

"Sixth. Further answering, this defendant says that said Augustus Hamilton received no injury from accidental means, within the terms of said policy of insurance, from and after the date of March 26, 1900, to the time and date of his death, and that the plaintiff herein, being the beneficiary named in the said certificate sued on, ought not to recover herein because the injury complained of, which occurred to Augustus Hamilton, deceased, on the 26th day of March, 1900, was fully settled for, and all damage thereunder paid by this defendant to said Augustus Hamilton in his lifetime, which said settlement was made with the full and complete understanding and knowledge between the parties thereto that said settlement and payment as aforesaid included and covered every and all claims that was or might be urged against the defendant society on account of the accidental injury received by said Augustus Hamilton on said 26th day of March, 1900. Defendant further alleges that the settlement and payment to said Augustus Hamilton by the defendant as aforesaid for the injury received by him on March 26, 1900, has never been changed nor modified in any respect."

At the trial the jury were instructed to disregard these paragraphs, and the sustaining of the demurrer, and the refusal to submit the issues sought to be set up in them, are urged as grounds for reversing the judgment.

It will be remembered that the claim of plaintiff is by reason of the death of the insured. The allegations of paragraph fifth are that the insured presented to defendant proof of injury in support of a claim for damages, claiming a greater sum than $37.50; that defendant denied liability to that amount, but paid him, as "a full and complete settlement and satisfaction of any and all claims" on account of the injury, on May 22, 1900, the $37.50; that the insured received it "in full settlement of all claims he had or might have

Digitized by Google

clusion from this, that all claims which could be urged against defendant by any other person on account of this injury were, by the payment of this money, and the giving of a receipt for it, fully settled, and the liability of the defendant association on account of the accident adjusted and paid. The sixth paragraph says that the doctor received no accidental injury after the settlement, and that plaintiff should not recover, because the injury of March 26th was fully settled for, and that this settlement "included and covered every and all claims that were or might be urged against the defendant society on account of the accidental injury received by said Augustus Hamilton on said 26th day of March." It is also alleged that the settlement had never been modified. It will be observed that these allegations, in terms, refer only and solely to injuries received by and damages accruing to Dr. Hamilton. It will be observed, too, that the language does not in express terms refer to any future damage or injury that might result from the accident. It is true that it mentions, as above shown, "every and all claims that might be urged" against the defendant on account of the accident; but the allegation does not relate to the terms of the settlement, but is merely as to its effect, and does not necessarily refer to anything but claims that might have been urged at that time. It does not indicate that there was any agreement or intention on the part of either the insured or the defendant to surrender the contract, or to give up future accruing rights under it. If the language of these allegations is construed, as it should be, most strongly against the pleader, all of these allegations must be held to have relation to damages at the time of the settlement already sustained, and which the contract provides should be paid, and should be deducted from the $2,000 payable in case of death, if death should afterwards, within the stipulated time, result from the accident. A receipt drawn in the terms of these allegations, and containing no more specific reference than they do to the contingency of the doctor's death, would not, of itself, and in the absence of extending circumstances, be held to cover damages in the future from his resulting death.

It is probably true that plaintiff and her counsel were at the time claiming, as they do now, that a vested right accrued to her at once at the time of the accident, which could not be settled for between the defendant and her husband without her assent, and it seems that the action of the trial court was based upon such supposition; but it does not matter upon what basis the trial court acted, if its action was right. In our opinion, if the defendant in this case really had the defense which was held good in Wood v. fense in plain terms. That is, defendant should have alleged distinctly that the $37.50 paid to Dr. Hamilton on account of this injury was paid not merely on account of the loss and suffering then already accrued to him, but was paid also on account of the relinquishment and the surrender of all right and claim for any damage or injury which might thereafter accrue to him or to the beneficiary by reason of the accident. It would be by a very liberal construction of these allegations that their language could be held to cover and include in the settlement indemnity to the beneficiary for the doctor's death. The trial court was not bound to extend any such liberal construction. The allegations might be entirely true, and leave the whole matter of the liability to the beneficiary entirely untouched.

There is very little doubt that the facts are set out as fully and as favorably for the defense as the truth would admit, but we are of the opinion that the trial court was right in holding that they did not disclose a defense. Whether such holding was based on the insufficiency of the allegations themselves, or on the supposition that after the accident the beneficiary had a vested interest in the policy, does not seem material. Nor does it seem to be necessary to decide the latter question in the absence of a distinct allegation that the matter of the future liability to the beneficiary was distinctly included and covered by the terms of the settlement agreement. There seems no doubt that the fair interpretation of the language of these allegations is that the settlement of claims "which were or might be urged against the defendant" had reference solely to claims then existing, or which might have been urged on account of facts which had already transpired. A settlement, to do away with defendant's liability after an accident had already occurred, should be much more explicit.

The other question, as to the sufficiency of the evidence to sustain the verdict, is given very little attention by plaintiff in error, and seems hardly to have merited more. It is true that the death of the insured on June 10th was the result of a complication of diseases, but the evidence tends very strongly to indicate that they resulted from a violent injury to his liver which came from the runaway accident of March 26th. We do not feel disposed to disturb the finding of the jury in reference to this matter.

It is recommended that the judgment of the district court be affirmed.

KIRKPATRICK, C., concurs.

PER CURIAM. For the reasons stated in the foregoing opinion, the judgment of the district court is affirmed.

Digitized by Google

of the default of interest payments,
t unless he paid the delinquent inter-
ontract would be forfeited. Appellee
n, in order to protect his lien, paid
ate, not only the delinquent interest,
whole amount of the principal, and
from the state a deed for the land
rm, and subsequently brought this
g to be subrogated to the rights of
under the contract, and to be
decree of foreclosure. A decree
l by the trial court, and the cause
here for review upon appeal.
ver alleged that the payments
pellee were mere voluntary pay-
h appellee was under no legal
make; that the $450 note due
been fully paid by appellants;
the event the state elected to
ntract it would merely retake
he land, and would not attempt
personally responsible on the
that for these reasons ap-
entitled to subrogation. It is
in the answer that appellee's
lulent, and that in making
the state he was attempt-
appellants out of the land.
ed portion of the answer
either in the evidence or
f the trial court, and for
es no consideration. The
llants seems to be entire-
While it is doubtless the
e state, when it declares
ale contract of land, to
not enforce the personal
purchaser, yet we are
prevent the state from
he purchaser under his
se the land should de-
it became a matter of
te to enforce the con-
aser, we have no doubt
he experience in this
y the time the state
he land had become
ble, and the state
resell the land, rather
performance of the
In the case at bar
able to the state up-
chase price of the
had a right, upon
rfeiture, to pay to
l for by the notes,
nd. This he did,
be subrogated to
r the contract.
em to have been
d in the decree
Appellants are
erest payments
ult, and by the
ipal is allowed
d of 20 years,
d to pay any

Digitized by Google

deducted from the amount found by the decree to be due appellee under the contract. The contention of appellants seems to be without merit, and the judgment of the trial court seems to be right.

It is therefore recommended that the judgment be affirmed.

DUFFIE and POUND, CC., concur.

PER CURIAM. The conclusions reached by the Commissioners are approved, and, it appearing that the adoption of the recommendations made will result in a right decision of the cause, it is ordered that the judgment of the district court be affirmed.

WARDER, BUSHNELL & GLESSNER CO. v. MYERS et al.

(Supreme Court of Nebraska. Oct. 7, 1903.)

CONTRACT—FAILURE OF CONSIDERATION—RECOVERY OF MONEY PAID—RATIFICATION—ACTS OF AGENT.

1. Answer examined, and *held* to state a defense to the cause of action set forth in the petition.
2. Where money is paid on a contract the consideration of which has wholly failed, a recovery may be had as for money had and received.
3. One is not permitted to ratify an unauthorized act in so far as it operates to one's advantage, and repudiate it in so far as it imposes burdens. If one avail one's self of the fruits of an act, one thereby charges one's self with the burden of all the instrumentalities employed by the agent to effect his purpose. Osborn Co. v. Jordan, 72 N. W. 479, 52 Neb. 465.
4. Instructions examined, and the giving of the same *held* without prejudicial error.
5. Where disputed questions of fact are determined by a jury on fairly conflicting evidence, its findings thereon become conclusive.
6. Rulings of the trial court on the admission and rejection of evidence *held* to be without prejudicial error.

(Syllabus by the Court.)

Error to District Court, Webster County; Adams, Judge.

Action by the Warder, Bushnell & Glessner Company against Isaac Myers and others. Judgment for defendants, and plaintiff brings error. Affirmed.

George R. Chaney, for plaintiff in error. E. U. Overman, for defendants in error.

HOLCOMB, J. The plaintiff in error (also plaintiff below) began an ordinary action against the defendants for the recovery of the amount due upon a promissory note alleged to have been executed and delivered by them. As a defense it was pleaded in the answer that the note was given in part payment for a harvesting machine purchased prior thereto from the plaintiff upon a contract of warranty which had wholly failed; that the note was given upon the express contract of the plaintiff that the machine, which it is alleged was wholly disabled for work of a harvesting machine of like kind without expense to the defendant, and, in case the machine did not do such work, plaintiff would take it back, and surrender to the defendant the note so executed and delivered as aforesaid; that the plaintiff had wholly failed to perform its part of the contract and put the machine in working order, and that because thereof the defendant has been wholly unable to use the machine for cutting and binding grain, and that the consideration for which the note was given had wholly failed. The reply denied the allegations of affirmative matter alleged as a defense to the plaintiff's cause of action. This is the second appearance of the case in this court. The unreported opinion dealing with the case on first appeal is found under the same title as here given in 89 N. W. 387. The judgment of the lower court was there reversed, and the cause remanded for errors in the admission of evidence in support of allegations of damages, which it was held were too remote, and could not properly be recovered for a breach of the contract pleaded in the answer. The cause was remanded for the purpose of trying the issue raised by the interposition of the defense of which we have made mention. The law of the case is, in many respects, settled by the former opinion, and requires no further or extended consideration at this time. The issues tendered by the pleadings were largely those of fact to be submitted and determined by the jury as such. Although the pleadings were construed in the former opinion, and held to be sufficient to support a judgment in favor of either party, it is yet urged by counsel for plaintiff in error that the answer does not state a good defense. This is upon the ground that, according to the allegations in the answer, if the machine was not made to do good work, it should be taken back by plaintiff and defendant's note surrendered. Yet it is nowhere alleged that any notice was given to the plaintiff, or demand made for a return of the note, nor was there an offer to return the machine and rescind the contract. The allegation as to the notice and rescission of the contract is not, we think, essential, in order to tender a valid defense, assuming the agreement to be as pleaded in the answer. The plaintiff undertook affirmatively, under the agreement, to repair the machine and put it in good working order, or to take it back and return the defendant's notes. This it failed to do, and until it had complied with the terms of the agreement it had no cause of action on the note, the consideration of which, because of its neglect and refusal to put the machine in good working order, had by reason thereof failed. It was not a question of rescission of contract, but of compliance with its terms on the part of the plaintiff in order to entitle it to a recovery on the note sued on. The

Digitized by Google

nd was wholly disabled. To adjust the
iatter, and bring about a settlement of the
riginal contract of purchase, the old contract
as superseded by the new, and by the
rms of the latter agreement, as the princi-
al consideration for the note, the machine
as to be repaired so as to do the ordinary
ork of its kind. It was, in the language
the answer, wholly disabled for harvest-
ig purposes, and the note was given on the
xpress consideration that the plaintiff would
pair it and put it in condition to do ordina-
work of a grain-harvesting machine of
ke kind without expense to the defendant,
nd that, in case it did not do such work,
aintiff would take it back and surrender
ie defendant's notes, which it had wholly
iled and neglected to do. If the allega-
ons be accepted as true, then the plaintiff,
y its default, forfeited its right to recover
ie amount due on the note because of a
ailure of consideration. Under the plead-
igs it was not incumbent on the defendant
return the machine, or to give notice of
ie rescission of the contract. It was the
uty of the plaintiff, before a recovery could
had on the note, to repair the machine so
at it would do the work ordinarily done
y machines of its kind.

It is also alleged in the answer that at the
me of giving the note sued on, and for the
ime consideration, and none other, another
ote was given for $30 due and payable be-
re it appeared that the consideration for
ie contract had failed, which note was paid
its maturity, with interest, and a judg-
ent was prayed against the plaintiff for
ie amount which had thus been paid under
nd in pursuance of the contract, and before
was known that its consideration had fail-
l. Judgment went against the plaintiff for
ie sum thus prayed for. It is contended
at the allegations in the answer are in-
fficient to support such a judgment. All
ie facts essential to show a right of recov-
y for money paid when the consideration
erefor had failed are, we think, disclosed
the answer, and that it is, as was indi-
ctly held in the first opinion, sufficient to
pport a money judgment for the amount
paid, should the jury find the issues in
fendant's favor. The note was alleged to
ive been given for no other consideration
an plaintiff's promise and agreement to re-
air the machine, and was paid before it
as known that the consideration for the
ntract had failed, or would fail. It cannot
doubted the law is that a party who agrees
perform an act and fails to keep his agree-
ent must pay compensation for all inju-
es that naturally and proximately result
om the breach. So far as the present case
concerned, under the pleadings and the evi-
nce, as found by the jury, it is established
a verity that there is no other consider-

ed and neglected to do. The failure to perform that agreement operated as a failure of consideration for the money so paid. In such a case, where one party has received money from another on a consideration which has failed, or where money has been paid which in equity and good conscience ought to be refunded, the party entitled thereto ordinarily is entitled to recover the money so paid, and interest from the time of payment, as and for money had and received. The pleadings complained of and the evidence in support thereof we regard as sufficient to support a recovery in favor of the defendant for the money paid on the note before the failure of consideration for such payment became apparent.

Much of the controversy is with respect to the authority of the agent of the plaintiff to make the agreement relied on as a defense. It is contended by the plaintiff that the agent was wholly without authority to bind it by such a contract, and that his authority was limited to that of collecting the notes given in the first instance for the machine, which it is alleged under the contract last entered into was to be repaired and put in working condition. Complaint is made of the court's instructions touching the question, its rulings on the admission of evidence relating to the same, and its refusal at the close of the trial to permit the plaintiff to amend its reply by alleging specifically want of authority on the part of the agent to make such an agreement. This question may, we think, be properly disposed of by calling attention to the fact that the plaintiff, by taking and accepting the notes procured by its agent, and attempting to enforce their collection, would not be permitted, on the one hand, to enforce that part of the agreement which was beneficial to it, and at the same time repudiate the authority of the agent as to that part which carried with it a duty and a burden. The acts of its agent must be accepted and ratified as a whole, or repudiated in the same way. Osborn Co. v. Jordan, 52 Neb. 465, 72 N. W. 479. One will not be permitted to adopt that part of a contract made by his agent without antecedent authority which is beneficial and repudiate the remainder. He must either adopt the whole or none. Martin v. Humphrey, 58 Neb. 414, 78 N. W. 715. Not only is there evidence that the plaintiff at the time was advised of the nature of the agreement made by its agent, but since that time the evidence is conclusive on the point that it had accepted and ratified the acts of its agent, and based its right to recover from the defendant on the contract entered into by him. On the principle of the authorities cited, when attempting to enforce in one particular the contract made by its agent it is clearly estopped from at the same time asserting want of authority

Digitized by Google

n this action, which is not one for the appointment of a guardian, does not state grounds for such appointment. By the stipulation he was duly appointed by the proper court, duly qualified, and was still such guardian. In the condition of the record, and after such a stipulation as this, the plaintiff would be entitled to amend his petition, if necessary, to make it conform to these stipulated facts. It is therefore not worth while to give time or space to any more full discussion of this contention than is found in the former opinion.

Another contention of the appellant is that because to authorize the county court to appoint a guardian for Emery W. Tuttle it must have been made to appear in that court that he was mentally incompetent to have the charge of and management of his property, and because this action is brought by the guardian so appointed, therefore the plaintiff must allege and prove that Emery W. Tuttle at the time of making the conveyance in question was so mentally incompetent to have the charge and management of his property as to render the deed in question absolutely void, because of the total want of capacity to make the deed at the time it was made. In this, we think, he is wrong. The question of such capacity at the time of the hearing was in issue in the guardianship case, and was so decided by the court that the plaintiff was duly appointed guardian, and is res judicata. The plaintiff, then, had a right to bring this action to set aside the conveyance in question without allegation or proof that at the time it was made his ward was totally without capacity to make it, if upon any equitable grounds the ward himself, or any one claiming under him, could have sustained such an action; and what he was required to allege and prove is such a set of facts as would require a court of equity to so set the conveyance aside. There was no need to allege and prove total incapacity in Emery W. Tuttle at the time the deed was made, although such allegations and proof would establish the fact that the deed of conveyance was absolutely void. Therefore the contention that the judgment cannot be sustained for want of such allegations and proof is erroneous.

Argument is made that there is no pleading of facts which show that the deed in question was obtained by the defendant by means of any fraud, the contention being that the false representations alleged to have been made by the defendant to induce the deed are not made respecting any existing fact or facts, and that the allegations that the defendants "falsely and fraudulently represented to said Emery W. Tuttle that his son, the said Bud Tuttle, and one Henry Duval * * * were conspiring together to defraud him of his aforesaid land, and said Duval and said Bud Tuttle were intending to conditional, and contingent, and is a mere opinion." This is incorrect. The allegation is that he falsely and fraudulently represented the existence of an active conspiracy to defraud him of his land, and, if the allegation be true, and this representation was falsely and fraudulently made by the defendant, well knowing the weak and enfeebled condition of Tuttle's mind, and the deed was induced thereby, coupled with a promise that the defendant would hold the land in trust for the grantor, these facts would be sufficient to require a court of equity to enforce a trust or compel a reconveyance.

Defendant's brief, on page 25, contains the following: "Stripped of its incumbering verbiage, the pleader means to say that the defendant, knowing the age of Emery W. Tuttle, and his enfeebled mental and bodily condition, falsely represented to him that his son and son-in-law were conspiring to defraud him of his land; that they intended to bring an action against him for a large sum of money, and would be able to procure a judgment against him by false evidence, and would cause the land to be sold to satisfy the judgment, and that the only way to protect himself was to convey the land to the defendant, who promised to hold it in trust for him, and reconvey it whenever he desired it. That these are conclusions of law, and not statements of ultimate and issuable facts, I think no man familiar with the primary rules of pleading will attempt to deny. But, whether true or not, it is true that they do not contain a single allegation of false representations respecting an existing fact." The defendant's mere statement of the proposition, stripped, as he says, of its incumbering verbiage, is sufficient to overthrow his contention. He argues that it "expresses no more than that the defendant represented to Mr. Tuttle his belief that the son and the son-in-law would bring an action," etc. Suppose the defendant did thus believe, and so stated his belief, and suppose it were well founded, and suppose that Mr. Tuttle, weak and enfeebled in mind as stated, was so induced to make the deed, relying upon the promise of the defendant to hold in trust for him, and reconvey when he desired, and that such promise was made without intention of keeping the same, as the subsequent action of the defendant clearly indicates, the property being an exempt homestead, and not capable of fraudulent alienation, would not a court of equity enforce the trust? But, as pleaded, it was not the expression of a belief, but a false and fraudulent statement of the present existence of a conspiracy, coupled with a declaration of the power of the conspirators to make their scheme successful. We are satisfied with the former holding of this court on the question of the sufficiency of the petition as the record stands, and the same is adhered to.

Digitized by Google

missioner in the previous opinion on the sufficiency of the allegation that the conveyance was without consideration as a pleading of fact. Pleading that the transfer of negotiable paper was "for a valuable consideration in the due and ordinary course of business," etc., is common in our practice, and when denied raises an issue. Yet such allegation of the existence of a consideration is more nearly the statement of a conclusion of law than the allegation of its nonexistence. If it exists, its nature and manner of payment can be shown; if it does not exist, it has no nature or manner of payment.

There is still some contention that this action cannot be sustained by the plaintiff, because he is designated in the title to the petition as "Levi Bennett, Guardian of Emery W. Tuttle"; arguing that the words "Guardian of Emery W. Tuttle," are descriptio personæ. In Thomas v. Carson, 46 Neb. 765, 65 N. W. 899, it is said: "Where the petition or complaint states a cause of action in favor of the plaintiff personally, superadded words, such as 'agent,' 'executor,' or 'trustee,' will be regarded as descriptio personæ." But that is not this case, and we adhere to the rule announced in the former decision as right and decisive on this point.

We have carefully re-examined the case, and, we think, sufficiently discussed the real issues of law and fact involved therein. It would be too tedious in this opinion to attempt to follow and analyze the entire 100 pages of argument in appellant's briefs. The points in the case necessary to a decision have been noted with special reference to those insisted upon in the reargument, and we think they all have been correctly decided.

We recommend that the decision heretofore announced be adhered to.

ALBERT and BARNES, CC., concur.

PER CURIAM. For the reasons stated in the foregoing opinion, it is ordered that the former judgment of this court be adhered to, and that the judgment of the district court be affirmed.

McCOOK IRRIGATION & WATER POWER CO. v. CREWS et al.

(Supreme Court of Nebraska. Oct. 7, 1903.)

RIPARIAN OWNER—USE OF STREAM—IRRIGATION—EXTENT OF RIGHT—INJUNCTION—LOWER RIPARIAN OWNER—DAMAGES—APPEAL—REMAND.

1. A riparian owner has a right to make a reasonable use of a stream flowing over or along his lands for the purposes of irrigation.

2. This right is to be measured primarily by the amount of water in the stream available for such purposes, the number of persons who may so use it, the size, situation, and character of the stream, and the nature of the region.

3. In case a reasonable use of the water consistent with a like use by other riparian owners an irrigation enterprise is nominal only.

4. A lower riparian owner cannot enjoin an irrigation enterprise by an upper appropriator under the statutes, merely because his damages for injury to his riparian rights have not been paid. His remedy is to sue at law for such damages.

5. But in case a lower appropriator under the statute is materially affected by diversions of water by upper riparian owners, he may bring a suit in equity to determine the rights of all claimants to use of the water, and to quiet his title thereto, in which the damages to riparian rights may be ascertained, and due compensation awarded.

6. The lower appropriator may not maintain such a suit against upper riparian owners without offering to do equity by paying whatever damages accrue to such owners by reason of the appropriation.

7. It will not be presumed that the damages in such case are nominal only.

8. In furtherance of justice, where a decree is reversed, this court may remand the cause, with leave to amend the petition and bring in new parties, instead of requiring the expense of a new suit.

(Syllabus by the Court.)

Commissioners' Opinion. Department No. 3. Appeal from District Court, Hitchcock County; Norris, Judge.

Action by the McCook Irrigation & Water Power Company against Charles G. Crews and others. Judgment for plaintiff, and defendants appeal. Reversed.

W. S. Morlan, for appellants. F. L. Foss and L. H. Blockledge, for appellee.

POUND, C. The plaintiff is operating an irrigation ditch, taking water from the Republican river as appropriator. The defendants are riparian owners upon the Frenchman, a principal tributary of the Republican river immediately above the plaintiff's canal, and claim a right to irrigate their lands with the water of said stream both by virtue of their riparian rights and under subsequent appropriations. With the latter we have no concern. This suit is brought to enjoin the defendants from diverting water necessary to the conduct and operation of the plaintiff's ditch, and claimed by the plaintiff by virtue of its priority. The trial court granted an injunction, and the defendants appeal.

The principles by which this cause must be governed have been settled substantially in the two prior cases of Crawford Co. v. Hathaway (Neb.) 93 N. W. 781, 60 L. R. A. 889, and Meng v. Coffey (Neb.) 93 N. W. 713, 60 L. R. A. 910, in which the several questions involved are discussed exhaustively. The defendants, as riparian owners, have a right to make a reasonable use of the stream for the purpose of irrigation. Meng v. Coffey, supra. And this right is property, entitled to protection as such, the same as property rights generally, and is within the purview of the provisions of the Constitution prohibiting taking of or damage to private

¶ 8. See Appeal and Error, vol. 8, Cent. Dig. § 4623.

Digitized by Google

The injury to the rights of a riparian owner in such cases may be nominal only, or may be substantial, depending in each case upon a number of circumstances. In general, the right is to be measured primarily by the amount of water in the stream available for irrigation or other proper uses, the number of persons who may so use it, the size, situation, and character of the stream, and the nature of the region. The purpose of the common-law doctrine on this subject is to secure equality of use by riparian owners, as near as may be, to each, by requiring each to exercise his rights reasonably, and with due regard to the rights of other riparian owners to apply the water to the same or other purposes. Meng v. Coffey, supra. The right of the riparian owner, therefore, is neither a right to have every drop of the water flowing past his land on the one hand, nor, on the other, to abstract such quantities as he may deem necessary and proper for use upon his own land, to the injury of others who may desire to use the water also. It is simply a right to be permitted to enjoy, and to make a reasonable use of, the water, consistent with like use by all other riparian owners. In Crawford Co. v. Hathaway, Holcomb, J., suggested, and we entirely concur, that the extent of land with reference to which riparian rights may be claimed cannot exceed the area acquired by a single entry or purchase from the government, and he was inclined to hold that such area should be restricted to 40 acres, or, in case of irregular tracts, a designated numbered lot in the government survey. This is not to be taken, however, as meaning that every riparian owner may claim the benefit of the stream for the purposes of a tract of that size in every case. It is to be taken as a limitation of the reasonable use permitted by law, rather than as defining it. In case the size of the stream, the amount of water therein, and the number of riparian owners who may make use thereof are such that the irrigation of five acres, for example, would be an unreasonable use, the riparian owner would not be permitted to use the water to that extent in derogation of the rights of other riparian owners, and, in consequence, could not claim damages as against an appropriator upon that basis. Two elements are to be considered—the amount of water in the stream, and the extent of the riparian land. Unless and until there is sufficient water to permit use with reference to an entire tract acquired by the single entry or purchase from the government, the latter does not become material. In consequence, if a reasonable use of the water consistent with a like use by other riparian owners cannot be made in a particular case, the injury to the riparian owner by reason of appropriation of the water by an irrigation enterprise is nominal only.

riparian owner against an upper appropriator and a suit against the upper riparian owner by a lower appropriator. In Crawford Co. v. Hathaway, supra, it was held that a riparian proprietor might recover damages for injury to his riparian rights by appropriation under the statute in the same way and subject to the same rules as a person whose property is affected injuriously by the construction of a railroad. In that case a comparison was made between injury to riparian rights by appropriations and injury to abutting property resulting from obstruction of streets and highways by the construction and operation of railways. It is well settled that the remedy of the abutting owner in such cases is to sue at law for his damages. The same conclusion was reached, with respect to injuries to abutting property resulting from the obstruction of streets and highways by poles and wires, in Bronson v. Albion Tel. Co. (Neb.) 93 N. W. 201, 60 L. R. A. 426. In that case it was laid down as a general rule that, "in case property is not taken directly by a public undertaking, but an owner suffers some injury in an incidental right growing out of his peculiar situation or position, so that ordinary condemnation proceedings and payment of damages in advance are not practicable, the owner will be left to his remedy at law, and is not entitled to an injunction, unless upon proof of insolvency or some other special circumstance." This principle is clearly applicable to the instance under consideration. It follows that the lower riparian owner cannot enjoin an irrigation enterprise by an upper appropriator under the statutes merely because his damages for injury to his riparian rights have not been paid. His remedy is to sue at law for such damages. A different principle, however, comes into play with respect to suits by lower appropriators against upper riparian owners. Undoubtedly the upper owner, who will be deprived of the right to use water upon his riparian lands by reason of an appropriation requiring that all the water pass into the ditch or canal of the appropriator, may maintain an action at law to recover his damages. But in case he does not see fit to do so, and diverts water for use upon his riparian lands so as to affect materially the lower appropriator, the latter may bring a suit in equity to determine the rights of all claimants to use of the water, and to quiet his title thereto, in which the damages to riparian rights may be ascertained, and due compensation awarded. Crawford Co. v. Hathaway, supra, was such a case. Where it becomes necessary for the lower appropriator to go into equity to protect his appropriation as against riparian owners whose damages have not been paid, it is obvious that he ought not to be permitted to maintain his suit without offering to do equity by paying whatever damages have accrued to riparian rights by rea-

Digitized by Google

uity, he must do equity, and cannot put the riparian owners to the trouble and expense of actions at law for their damages. Nor can it be presumed that the damages in such case are nominal only. The right is a well-recognized and substantial one, which may be, in particular cases, very valuable. A plaintiff who interferes with or takes away this right ought to be willing, when he comes into equity, to submit the nature and amount of the injury to adjudication, and to pay such damages as may be awarded.

In view of these principles, we think the decree must be reversed. It does not provide in any way for proper compensation to the defendants for damages to their riparian rights, if any they have suffered; nor is there any provision for ascertainment thereof. But, as there must clearly be further litigation between the parties in order to settle the present controversy, we do not think it advisable to dismiss the cause. In furtherance of justice, where a decree is reversed, this court may remand the cause with leave to amend the petition and bring in new parties, instead of requiring the expense of a new suit. Hoagland v. Van Etten, 23 Neb. 462, 36 N. W. 755; Id., 31 Neb. 292, 297, 47 N. W. 920.

We think the cause should be remanded with leave to the plaintiff to amend its petition and bring in new parties, if so advised, to the end that its title may be quieted, the damages, if any, to upper riparian owners by reason of its appropriation determined and awarded, and all matters in dispute completely adjudicated in the one proceeding; and we so recommend.

DUFFIE, C., and KIRKPATRICK, C., concur.

PER CURIAM. For the reasons stated in the foregoing opinion, the judgment of the district court is reversed, and the cause is remanded for further proceedings, with leave to the plaintiff to amend its petition, and to make new parties defendant, if so advised.

SOVEREIGN CAMP WOODMEN OF THE WORLD v. HRUBY et ux.

(Supreme Court of Nebraska. Oct. 7, 1903.)

APPEAL—REVIEW—FINDINGS OF JURY—BENEFIT INSURANCE—SUICIDE.

1. The finding of a jury will be set aside when there is not sufficient evidence to support it, as where the clear weight of testimony is against the verdict, so that it is apparent that it is wrong.

2. Frequently the necessary inference from an undisputed state of facts is so certain that it is ruled upon as a question of law.

3. A verdict of a jury whose finding is based upon conjecture, and not on the evidence, cannot be permitted to stand.

4. Record examined, and the verdict of the jury *held* to be unsupported by and against the evidence.

(Syllabus by the Court.)

Graves, Judge.

Action by Vaclav Hruby and wife against the Sovereign Camp Woodmen of the World. Judgment for plaintiffs. Defendant brings error. Reversed.

Brome & Burnett, for plaintiff in error. Frank Dolezol and C. C. McNish, for defendants in error.

HOLCOMB, J. An action was begun in the court below by the plaintiffs (defendants in error here) for the recovery of the amount named in a beneficiary certificate issued by the plaintiff in error corporation (defendant below) on the life of Joseph Hruby shortly prior thereto deceased. The beneficiary certificate sued upon contained the following provision: "If the member holding this certificate should die by his own hand or act whether sane or insane this certificate shall be null and void and of no effect and all moneys which shall have been paid and all rights and benefits which may have accrued on account of the certificate shall be absolutely forfeited without notice or service." In the answer of the defendant association, among other things, it was alleged that the said Joseph Hruby did die by his own hand, whereby, by the terms of said beneficiary certificate, the same became and was absolutely null and void, and the plaintiffs could acquire no rights thereunder. The reply denied the affirmative matter contained in the answer. The cause was tried and submitted to a jury on the issue thus raised, which returned a verdict for the plaintiffs for the amount prayed for in their petition. A motion was filed asking for a new trial on the ground that the court should have directed, as requested, a verdict for the defendant, and because the verdict returned by the jury was not supported or sustained by the evidence. The motion being overruled, judgment was entered on the verdict, and the defendant prosecutes error, relying principally on the ruling of the court on the motion for a new trial on the two different grounds mentioned to secure a reversal of the judgment. It may here be said that the deceased, Joseph Hruby, came to his death from a pistol shot, the weapon being held in his own hand; and the question for consideration is narrowed to the proposition solely as to whether his death was accidental, or the result of an intentional taking of his life. It is earnestly insisted on the part of the defendant that, under the evidence, the court should have directed a verdct in its favor, and that the verdict returned is not sustained by, and is contrary to, the evidence. The decisive question to be determined, and the one to which we are disposed to confine and limit our inquiry and examination of the record, is with reference to the sufficiency of the evidence to sustain the verdict.

Joseph Hruby was a man of 30 years of

farm in Cuming county for a number of years, until shortly prior to his death. He was unmarried, apparently in good health in both body and mind, and, with the one exception which will hereafter be noted, it is difficult to glean from a careful examination of the record any reason for the taking of his own life. The beneficiary named in the certificate sued on was one Mary Vlach, who, it appears, had taken her own life just prior to the death of the insured. His next of kin were his father and mother, who are plaintiffs in this action. The plaintiffs and most of the witnesses were, when classed as to their nationality, Bohemians; and some points in the testimony, having possibly a material bearing on the issues, are left in some uncertainty—attributable, no doubt, to the witnesses' inability to understand and speak the English language perfectly. In the certificate, and the application for it, it was represented that Mary Vlach was a cousin of the insured. From the testimony taken, it appears that she was not thus related, although her mother and the father of Joseph Hruby, deceased, thus speak of the relationship of the two, but they can give no intelligent explanation of the kinship thus said to exist. It appears that the families of the Hrubys and the Vlachs were intimate from their early days, and it may be probable that their ancestors were in some way related. It appears, however, that there was a very warm attachment existing between the deceased and Mary Vlach, more nearly resembling that of the marriage engagement than of near relationship, although it is denied by the parents that any such engagement existed. For some months just prior to his death, Joseph Hruby had found employment in South Omaha, where he was working. Mary Vlach, it appears, was almost, if not quite, an invalid, and had suffered two surgical operations for her ailment. A third one, it seems, was regarded as necessary, rather than undergo which she took her life. Joseph Hruby was informed by telegraph of her death, but not of the cause, and immediately went from South Omaha to the home of her parents, in Cuming county, where her remains lay. He arrived at the home of the parents about 11 o'clock in the forenoon, and remained in the room where the body of the deceased girl lay almost continuously until time for the afternoon meal, when, while he was alone in the room, a pistol shot was heard, and he was found immediately after in a dying condition, with a revolver in his hand, one chamber of which had been emptied. Mrs. Vlach, the mother of the deceased girl, testifies that after he came he cried a "good deal," and paced up and down the room, and that during the afternoon he was walking back and forth in the room where the body lay. The mother and Hruby remained in the room, and conversed together more or less until she left at first under the impression that the girl's death was from natural causes. When she informed him of the true cause of her daughter's death, and showed him the self-inflicted wound producing it, he was greatly shocked and grieved, and expressed much surprise that she should thus end her life. Mrs. Vlach was the last to see him before his death, and the first person who saw him after the shot was fired which terminated his life. She had left him but a few minutes before, for the purpose of preparing his supper. She testifies: "Q. Where was Joseph Hruby the last time you saw him alive? A. He was sitting on my bed, joining that of my daughter. Q. Was that the same room the body of your daughter was in? A. Same room. Q. And that was in that bedroom in the north end of the house? A. Northeast corner. Q. What was he doing the last time you saw him? A. Last I saw of him, he was in the kitchen. He was walking up and down. I went into the pantry, and I then volunteered to make the supper for him. Well, I was preparing supper. I heard an alarm, and heard a report of some kind, and I run into the room, and found Hruby standing up by the bed, and reeled around, and fell face down toward the bed, right next to the body of the deceased girl. Q. Did he have anything in his hand? A. He had a revolver. Q. In what hand? A. In the right hand. Q. Was he standing up when you went into the room? A. That is before he reeled. He made a turn, and then fell down, and held the revolver in his right hand. Q. Where were you when you heard the revolver shot? A. In the kitchen. Q. Who else was in the kitchen? A. I was in the kitchen alone. Q. Where was Mrs. Joseph Vlach, Jr.? A. She was in the kitchen. Q. Where was Miss Barta? A. In the kitchen. Q. Who else was there? A. No one else. Q. Where was your son Joseph Vlach? A. My son was on the premises. Q. Well, whereabouts on the premises? A. Well, now, he was in the yard. Q. What was the next thing that was done after you saw him fall? A. Why, I knelt down, and tried to remonstrate with him, why he had done the deed; and he simply rolled up his eyes, and quite a large amount of blood run from him, and he died instantly afterward." Another witness, a doctor who was called after the death of Hruby had occurred, found him where he lay after he had fallen to the floor; the revolver lying by the body, with one chamber discharged; a bullet hole where the bullet had entered the right temple, an inch and a half above, and slightly forward from, the lobe of the right ear; and his scalp powder-burned at the point where the bullet entered.

No other evidence is in the record more directly to the point as to the cause of death than that which we have quoted, nor is there any conflict or contradiction. All of the

Digitized by Google

essential features just referred
reason is disclosed for the intent
of his own life by the deceased,
it seems there must be one to
his self-destruction, if such be
must, we think, be found in the
attachment existing towards
Mary Vlach, and his grief and
cause of her tragic end. Tha
most intense affection existing
is clearly disclosed by the wh
more especially by a letter
by him while in South Omah
before her death, which can
regarded in this connection
her in the fondest and most
tells her how he is progres
work, and of his plans and
future. He speaks of ha
number of shares in a gold
that he believes and asser
ble; what his yearly in
ably be; and asks if that
for "us two." He asks
formation to herself, and
his certificates of stock
have it sent to her; ch
second time to say nothi
but to keep it betweer
evident from a perusal
the same reasons whicl
out the policy of ins
prompted the offer to
for her benefit, what b
uable property, and t
and actions were w
he might be able t
tribute to the happin
If they were not aff
ter spoken of and
strongest possible e
drawn together by t
that the relationshi
in name.

With a record of
evidence pointing
self-destruction, a
environments con
human nature as
has shown it to
finding of the ju
a declaration th
an accident, is s
any competent
which can be a
ory that it is r
extending into
and speculatio
record pointing
inference as to
and can ther
deducible fro
ference that
the result o
thus present
delicate and
court to sol

Digitized by Google

struction. Whether, however, the cause of death is the result of an accident or of intentional acts, is an inference which must be reasonably deducible from the evidence, and cannot rest upon mere conjecture or speculation. A verdict of a jury whose finding is based upon conjecture, and not on the evidence, cannot be permitted to stand. Leisenberg v. State, 60 Neb. 628, 84 N. W. 6.

It is argued in brief of defendants in error, and suggested as a theory, that the death of the insured may properly be inferred from the evidence to be the result of an accident, as found by the jury. It is said that he carried a revolver in his hip pocket; that he was tired from traveling, and, in lying down to rest, found it inconvenient to have it remain in his pocket; and that, in removing it, by some inexplicable means he accidentally discharged it, with fatal results. There is an utter lack of evidence that the deceased had lain down. The evidence is conclusive that the only imprint on the bed in the room where the body of the deceased girl lay was that of a person sitting on it. Otherwise it was, as expressed by the witnesses, "made up." The mother testifies that Hruby sat on the bed during the afternoon, while talking with her. The bed was about three feet from the improvised bier where the remains of the girl lay. Hruby was standing between the two, and near to the body of the girl, when he was discovered by the mother, after the shot was fired, in a standing position, and reeling as he fell to the floor. When he fell he lay alongside the bier, on his back, with his head towards the feet of the dead body. That is, he must have been standing near the head of the bier, and fallen towards the foot of it. There is a total lack of evidence indicating a removal of the weapon from his pocket for any ordinary purpose, or tending to warrant the inference that he was handling it for other reasons than to use it as an instrument of self-destruction. No circumstance can be pointed out, consistent with a use of the weapon for some explainable purpose, from which accidental shooting probably resulted. To indulge in such an inference is to engage in fanciful conjecture and spectral speculation. The basis of such a conclusion is not to be found in the evidence, but altogether outside of it. It is to guess, to surmise, to conjure, and to conjecture. While the burden of proof is on the defendant to establish its defense of alleged suicide by a preponderance of the evidence, as is required in all civil actions, it is not required to, by its evidence, demonstrate to a mathematical certainty that the deceased intentionally took his own life. This is asking more than the law demands. It is quite true, as is argued by counsel, that the deceased was in good health, in the prime of life, dutiful to his parents, with pleasant surroundings, and bright prospects for the future. We think it clear, however, from an examination of the record, that, notwithstanding all these, there is but one rational explanation for the act, and that the evidence pointing to suicide overcomes all that may properly be inferred from these conceded facts. It is within the range of human possibilities that his death was accidental, but it is not at all probable; nor is there, in our judgment, evidence in the record from which it may properly be inferred. Hruby was at the time manifestly greatly grieved. He was suffering keenly because of the tragic death of one to whom he was most warmly attached, and who occupied a place in his affections second to none other. His future and hers he regarded as being linked together by indissoluble ties. He was advised immediately of her death, and went at once to where her remains lay. He was under the impression that she had died from natural causes until some time during the afternoon, when he was informed by the girl's mother as to the cause of her death, and shown the self-inflicted wound producing it. This could not have been other than a great shock to his already perturbed state of mind. He was alone only for a few moments, while the mother of the girl went into an adjoining room to prepare the evening meal. He carried a revolver in his hip pocket. He was in the room wherein lay the body of the deceased, Mary Vlach. A pistol shot was heard, and the mother of the girl rushed to the room. She found Hruby while yet in a standing position by the side of the dead body, reeling as if about to fall, with a smoking pistol in his right hand and a mortal wound in his right temple. He fell to the floor, and was asked why he did the deed, but, without replying or uttering a word, soon expired. As to the cause of his death under such circumstances, there can, in our view of the record, be but one rational answer given. "The jury could not have said, as men, that the circumstances did not show suicide, so as to leave no reasonable probability to the contrary. Therefore it was not permissible for them to say it as jurors, and have that stand as a verity in the case. The court should have granted the motion to direct the verdict, and, failing in that, should have set the verdict aside and granted a new trial." Agen v. Metropolitan Life Ins. Co. (Wis.) 80 N. W. 1020, 76 Am. St. Rep. 905. "There was no evidence whatever to indicate * * * that his death was accidental. The only rational, or, indeed, conceivable, explanation is that the deceased had committed suicide. Any other conclusion would outrage all reason. Had the jury found otherwise, its finding would have been set aside as being against evidence." Sovereign Camp of the W. O. W. v. Thiebaud (Kan.) 69 Pac. 348.

Our attention is also called to another alleged error, relating to an instruction given by the court to the jury, which, in view of

Digitized by Google

For the errors complained of and discussed herein, the judgment of the trial court is reversed, and the cause remanded.

SMITH et al. v. CLAY COUNTY.

(Supreme Court of Nebraska. Oct. 7, 1903.)

COUNTY COMMISSIONERS—POWERS.

1. Mitchell v. Clay County (No. 12,664, decided Sept. 17, 1903) 96 N. W. 673, followed.

Commissioners' Opinion. Department No. 2. Error to District Court, Clay County; Stubbs, Judge.

"Not to be officially reported."

Action by the county of Clay against William B. Smith and others. Judgment for plaintiff, and defendants bring error. Reversed.

S. W. Christy and Thomas H. Matters, for plaintiffs in error. Ambrose C. Epperson, for defendant in error.

POUND, C. This case was submitted with Mitchell v. Clay County (No. 12,664, decided Sept. 17, 1903) 96 N. W. 673, and turns upon substantially the same questions. For the reasons stated in the latter case, we recommend that the judgment be reversed, and the cause remanded.

BARNES and OLDHAM, CC., concur in recommending judgment of reversal.

PER CURIAM. The conclusions reached by the Commissioners are approved, and, it appearing that the adoption of the recommendations made will result in a right decision of the cause, it is ordered that the judgment of the district court be reversed, and the cause remanded for further proceedings according to law, in accordance with the decision in Mitchell v. Clay County (No. 12,664), supra.

BANK OF SALEM v. SHRIMPTON et al.

(Supreme Court of Nebraska. Oct. 7, 1903.)

BANKS—ACTION BY DEPOSITOR—EVIDENCE.

1. Evidence examined, and *held* insufficient to sustain the judgment of the district court.

Commissioners' Opinion. Department No. 2. Error to District Court, Richardson County; Stull, Judge.

"Not to be officially reported."

Action by Jesse T. Shrimpton and others against the Bank of Salem. Judgment for plaintiffs, and defendant brings error. Reversed.

S. P. Davidson and Isham Reavis, for plaintiff in error. C. Gillespie and F. Martin, for defendants in error.

ALBERT, C. In April, 1897, George Shrimpton, Sr., was the owner of a flour mill, Son. They were largely indebted at the time; one of their creditors being the Bank of Salem, the defendant in this case. They were unable to carry on the business longer by their own means, and entered into an arrangement with one Silas P. Gist, who at that time, and at the dates of the subsequent transactions hereinafter mentioned, was president of the defendant bank, whereby he personally undertook to furnish funds to operate the mill. It was a part of this arrangement that the finances of the mill should be absolutely under the control of Gist. In pursuance of this arrangement, Gist opened an account with the defendant bank, separate from his private account, which was designated on the books of the bank as the "S. P. Gist Mill Account," upon which were credited the advances made by him to the firm, and the money derived from the operation of the mill. The checks of Shrimpton & Son, though drawn in their own name and on the defendant bank, were charged against the mill account. The foregoing arrangement continued until February 14, 1899, at which date the mill account was overdrawn to the amount of about $1,100. On that date a new arrangement was made, whereby the mill, stock on hand, and certain personal property kept and used in connection with the operation of the mill, including book accounts, were conveyed and transferred to Gist; the pecuniary consideration being the assumption of certain debts of the firm to the defendant bank, and the release of certain indebtedness due from the firm to Gist. A more specific statement as to the money consideration is not necessary to a decision in this case. As a part of the same transaction, Gist entered into a contract in writing with Jesse T. Shrimpton and Frank W. Shrimpton, also sons of the senior member of the firm, whereby he agreed to sell and convey the mill to them for the sum of $15,424, upon the following terms and conditions: "However, upon the following terms and conditions, to wit: The said second parties are to act and hereby agree so to act as the agents of the said first party in the operation of said mill and in disposing of its products, and in so acting will be known and styled as George Shrimpton's Sons, Agents, in order that the name by which the product of said mill is now known shall be maintained. The said first party is to have general supervision over said mill in the buying of grain, cattle, etc., and in the disposition of its said products, and is to furnish and hereby agrees to furnish all the necessary working capital to employ said mill at its maximum capacity, and to receive as interest therefor six per cent. per annum, which said second parties hereby agree to pay. The insurance, which shall be in the sum of $10,000, shall be kept up by said second parties so long as they occupy said mill property under this contract, and said insurance shall be paid out of the

Digitized by Google

virtue of this contract, the said taxes to be paid out of the general proceeds of said property. The interest on money advanced by said first party and the said money so advanced shall be paid by said second parties out of the proceeds of said mill, as well as the interest therefor at five per cent. per annum on the said principal sum of $15,424, which shall be paid out of the proceeds of said mill by said second parties. The said second parties to be allowed a reasonable amount for their living expenses and for the living expenses of their employés and advisers, to wit: George Shrimpton, Sr., and George Shrimpton, Jr., out of the proceeds of said mill, and all money remaining after the payment of all of the above shall be applied on the said principal debt of $15,424. It is hereby further agreed that $5,400 of the said principal debt is to be paid on or before four years from the date of the signing and executing of this contract and that upon the payment of the said $5,400 then and in that event the said parties of the second part are to be allowed to retain fifty per cent. of the net profits of the said mill after the payments as above set forth, the remaining fifty per cent. of the profits to be applied on the said principal debt then remaining. When the said principal debt has been reduced to the sum of $6,000 then and in that event the said first party agrees to and does here bind himself, his heirs, executors, administrators and assigns to deed said above-described property to said second parties, and to convey all his right, title and interest in and to said property to said second parties and to take as security for the same a first mortgage for the said sum of $6,000 which said second parties agree to execute. To all of the provisions of the above contract we mutually agree. In witness whereof we have hereunto set our hands this 14th day of February, 1899." Afterward Frank W. Shrimpton, with the assent of all the parties in interest, assigned his rights under the contract to his brother Benjamin F. This assignment has no bearing on the question involved in this case, and is only mentioned to show that Benjamin F. Shrimpton is one of the parties in interest in this case.

In pursuance of the new arrangement, Jesse T. and Frank W. went into possession of the mill, and the stock on hand and other personal property, including the book accounts, which had been transferred to Gist by George Shrimpton & Son, were turned over to them. They operated the mill under the new arrangement until the assignment hereinbefore mentioned of the interest of Frank W. to his brother Benjamin F. From that time the latter and Jesse T., whom we shall hereafter call the plaintiffs, operated it under the same arrangement, and under the firm name of George Shrimpton's Sons, ant bank. The money deposited by the plaintiffs was credited to the mill account, and the checks drawn by them were entered as charges against it. The overdraft hereinbefore mentioned, although it varied in amount from time to time, was carried forward on such account during the whole of the time the plaintiffs operated the mill. On the 30th day of October, 1899, the overdraft, according to the books of the bank, had been reduced to about $124. On the date last mentioned, and when the mill account was thus overdrawn, the plaintiffs drew a check on the defendant bank for a certain amount, which was presented for payment, and payment refused. Thereupon they brought this action to recover of the defendant for money had and received. The following December, Gist ousted the plaintiffs from the mill, and took possession of it and of the stock and other personal property. Thereupon the plaintiffs brought an action against him personally for damages for breach of the contract of sale between him and them. The two cases were consolidated and submitted to the court on the same evidence. In the case against Gist, the court found for the defendant, and rendered what purports to be a judgment thereon in his favor on the 27th day of November, 1901. In the case against the bank, the court found for the plaintiffs, and rendered judgment accordingly on the 11th day of June, 1902. The judgment in the case against Gist is not up for review. The judgment against the bank is assailed by a petition in error.

The theory of the plaintiffs is that they have nothing to do with the mill account, nor the overdraft thereon, and that the defendant is liable to them for the amount of their deposits, less the amount drawn out by themselves. The judgment of the district court is based on that theory, but we are unable to find sufficient evidence to sustain it. It is conclusively established that, when the plaintiffs entered into their contract with Gist, it was mutually understood that the business of operating the mill should be conducted just as it had been previous to that time by George Shrimpton & Son under the arrangement with Gist. We have seen that, under that arrangement, Gist had absolute control of the finances of the mill; that the income from the mill was deposited and credited to the mill account; that such account was in fact a private account of Gist's, and the firm of George Shrimpton & Son had no control of it whatever, except that they were permitted to draw on it. The written contract itself shows that Gist was to retain control of the finances of the mill. Besides, the plaintiffs acted upon the understanding that the former methods should continue. The customers'

Digitized by Google

passbook furnished them by the bank was a mere continuation of the mill account, which stood charged with the overdraft of some $1,100 hereinbefore mentioned. This book, showing such overdraft, was regularly balanced every month, and as regularly returned to the plaintiffs. Interest was charged on the overdraft, and, while there is evidence that on one occasion they objected to the rate of interest, they never objected to the overdraft itself until after the controversy which culminated in this litigation arose. Moreover, some of the accounts assigned by Shrimpton & Son to Gist were collected by the plaintiffs, and when deposited were credited on the same account and same book as the other deposits made by the plaintiffs. The evidence is too voluminous to set out at length. But, taken in its entirety, we are satisfied that the only reasonable inference to be drawn from it is that the plaintiffs, in making deposits with the defendant bank, never intended to open an account in their own right, but intended and understood that such deposits should be credited to the mill account, which, as we have seen, was a private account of Gist's, and under his control, and which was overdrawn when this action was commenced.

It follows that the judgment of the district court is wrong, and we recommend that it be reversed, and the cause remanded for further proceedings according to law.

BARNES and GLANVILLE, CC., concur.

PER CURIAM. The conclusions reached by the Commissioners are approved, and, it appearing that the adoption of the recommendations made will result in a right decision of the cause, it is ordered that the judgment of the district court be reversed, and the cause remanded for further proceedings according to law.

SHARP v. CALL et al.

(Supreme Court of Nebraska. Oct. 7, 1903.)

For former opinion, see 90 N. W. 765, 95 N. W. 16.

SEDGWICK, J. (dissenting). Upon further examination, I feel that I ought to say that I have never been satisfied with the decision of this case, and think that the plaintiff ought to be allowed to recover. That he has acted in good faith throughout the various phases of the transactions which led up to this litigation, and has at all times taken such action as an honorable and intelligent business man would ordinarily be expected to take, I believe is unquestioned. I do not believe that there is any principle of law that requires us, under the facts as disclosed by this record, to imply such wrongdoing on his part as to prevent his recovery. I should have reviewed these facts in my dissenting opinion at the conclusion upon the former hearing, but this would have involved the expenditure of considerable time without any apparent beneficial practical results, and as the case has now been twice considered, and a majority of the court are satisfied that the result would be the same if the case were heard again, another hearing does not seem to be advisable, but I feel that it is my duty to the parties interested to make this brief statement.

McHALE et al. v. METZ et al.

(Supreme Court of Nebraska. Oct. 7, 1903.)

DEFAULT JUDGMENT—RELIEF IN EQUITY—PETITION.

1. A court of equity will not grant relief against a judgment taken by default where the applicant, shown to have been duly served with summons, failed to avail himself of an opportunity to defend; such failure not being the result of fraud, accident, or mistake, unmixed with laches on his part.

2. Petition examined, and *held* insufficient to state a cause of action.

(Syllabus by the Court.)

Commissioners' Opinion. Department No. 3. Appeal from District Court, Holt County; Boyd, Judge.

Suit by Matt McHale, Jr., and others, against Charles H. Metz and others. Judgment for plaintiffs, and defendants appeal. Reversed.

R. R. Dickson, for appellants. John D. Pope and E. H. Benedict, for appellees.

KIRKPATRICK, C. This was a suit brought to enjoin a sale of land on execution issued out of the district court of Holt county on a judgment duly transcripted from Saline county. The petition was filed in the district court of Holt county, praying an injunction against the sheriff and the judgment creditors. To this petition a demurrer was interposed by appellants, which was by the court overruled. Appellants declining to plead further, judgment was entered in accordance with the prayer of the petition. To reverse this judgment, the cause is brought to this court upon appeal, and the only question presented is as to the sufficiency of the petition.

The petition alleged, in substance, that in July, 1898, Matt McHale and Matt McHale, Jr., who were at the time residing in Seward county, purchased of the J. I. Case Threshing Machine Company of Lincoln a steam engine and boiler, to be used in the operation of a threshing machine, at an agreed price of $900, due in three payments, of $300 each, evidenced by promissory notes in that amount. The appellant Charles H. Metz resided in Saline county, and was the agent of the threshing machine company who made the sale of the machines to the McHales. It was alleged that the notes for the purchase price of the machines were made payable to

Digitized by Google

ind were secured by a mortgage on the ma-
:hines; that the notes, after being executed,
were guaranteed by appellant Charles H.
Metz; that, to induce appellees to purchase
he machine, it was warranted to be a first-
class engine and boiler, and that it would do
good work, and was fit for the purpose in-
ended; that the machine was in fact wholly
worthless and of no value whatever, and
would not do the work as represented, all
of which, it was alleged, was well known
o the threshing machine company and to
Metz; that appellants were notified of the
worthless character of the machine, and
were notified to come and take it away; that
Metz did come and get the machine, and
sold it; that thereafter the threshing ma-
:hine company instituted an action in the
county court of Saline county against Charles
H. Metz, who resided in that county, and
against the McHales, who resided in Seward
county; that Metz entered his voluntary ap-
pearance in the action, and a summons was
ssued for the McHales, directed to the sher-
ff of Seward county, which was served per-
sonally; that the McHales made no appear-
ance in the action, and judgment was enter-
d against them by default; that subsequent-
y the threshing machine company assigned
ts judgment to Charles H. Metz. A tran-
script of the judgment was thereupon filed
n Holt county, an execution issued, and
evy made, to enjoin which is the purpose
of this action. It is alleged that the judg-
nent was obtained upon the perjured testi-
mony of Metz, and other matters are alleged
which need not be noted.

It is disclosed by the petition that per-
sonal service of summons was had upon both
he McHales, and that they made no appear-
ance in the cause, and no excuse or explana-
ion is made of their neglect to appear and
make a defense. The petition sets up mat-
ers sufficient to constitute a defense to the
action at law, if such matters had been prop-
erly presented to the court. The McHales
wholly failed and neglected to appear or
make any defense whatever, and, in our
opinion, this failure on their part is fatal
o their right of recovery herein. In Cle-
and v. Hamilton Loan & Trust Company,
5 Neb. 13, 75 N. W. 239, this court said:
'It is an inflexible rule that a party seeking
elief in a court of equity from a judgment
aken against him by default must exhibit a
lefense to the action, and must also show that
such judgment is the result of fraud, acci-
lent, or mistake, unmixed with fault or
negligence on his part. A judgment will not
e set aside on the application of a party
who has by his own laches failed to avail
himself of an opportunity to defend. This
salutary rule rests in principle and authority,
and its rigid enforcement is necessary for
he repose of society, by preventing litigation
from becoming interminable." Losey v.
Seidig (Neb.) 71 N. W. 1067.

to state facts entitling the petitioners to any relief, and the demurrer should have been sustained. It is therefore recommended that the judgment be reversed, and the cause remanded for further proceedings.

DUFFIE and POUND, CC., concur.

PER CURIAM. For the reasons stated in the foregoing opinion, the judgment of the district court is reversed, and the cause remanded for further proceedings.

TANNYHILL v. PEPPERL.

(Supreme Court of Nebraska. Oct. 7, 1903.)

DEED—WHEN A MORTGAGE—EVIDENCE.

1. Where a deed absolute in form is given to secure payment of an indebtedness existing between the grantor and grantee therein, and the relation of debtor and creditor continues after the execution of the conveyance, the deed should be treated as a mortgage.

2. Evidence examined, and *held* sufficient to sustain the judgment of the trial court.

(Syllabus by the Court.)

Commissioners' Opinion. Department No. 1. Appeal from District Court, Pawnee County; Letton, Judge.

Action by Samuel A. Tannyhill against Louis Pepperl. Judgment for plaintiff. Defendant appeals. Affirmed.

Lindsay & Raper, for appellant. Story & Story, Henry Matters, and Joseph Wurzburg, for appellee.

OLDHAM, C. The plaintiff in this cause of action, Samuel A. Tannyhill, held possession of a valuable tract of land in Pawnee county, Neb., under a contract of purchase. The contract provided for payments in installments, and that, when all installments were paid, a warranty deed should be executed to the holder or his assignees by the owner of the land. It appears that in making different payments on this contract, plaintiff had become indebted to numerous creditors who had either loaned him money or signed his notes as surety, and that to secure one of these creditors he had assigned his contract for the purchase of the land; that he applied to the agent of a loan company for a loan of money on the lands sufficient to pay the balance due on the contract and a portion of his general indebtedness; that he was informed that such loan could be procured as soon as title to the land was perfected; that the defendant in this cause of action, Louis Pepperl, was one of the creditors, to whom he was indebted in the sum of about $1,100 for money loaned and notes secured; that the plaintiff thereupon proposed to defendant that, if the defendant would advance sufficient money to pay the other indebtedness of plaintiff, he would re-

¶ 1. See Mortgages, vol. 35, Cent. Dig. §§ 60, 88.

Digitized by Google

defendant, and that they would procure a loan on the lands sufficient to pay the balance due on the contract and the indebtedness of plaintiff to the other creditors, and that the deed should be made to defendant, who could immediately take possession of the lands, collect the rents thereon, and control the same until the full amount of plaintiff's indebtedness was discharged; that in furtherance of this understanding and agreement the defendant advanced sufficient money to pay plaintiff's outstanding indebtedness, and plaintiff assigned the contract to defendant, who paid the balance due thereon, and received a deed to the premises; that a loan in defendant's name was negotiated on the premises for the sum of $2,400 and from the proceeds of this loan the defendant paid the balance of the purchase price of the premises and the outstanding indebtedness of plaintiff to other creditors than himself, and took the deed to the premises in his own name, and entered into possession of them, and continued in the possession for two years, making improvements on the premises, paying the interest and a portion of the principal upon the loan as the same matured. Plaintiff subsequently instituted this cause of action for the purpose of having an accounting with the defendant for the amount due him, and to have defendant's deed declared a mortgage, and the title quieted in plaintiff on payment of the balance due defendant. Defendant contended that the assignment of the land contract by plaintiff to him was an absolute sale in consideration of defendant's assuming and paying plaintiff's indebtedness. On issues thus joined the trial court found for plaintiff, treated the assignment of the contract and the deed received thereunder as a mortgage to secure plaintiff's indebtedness to defendant, credited defendant with all money advanced under his agreement with plaintiff and with the value of all improvements made on the premises during his occupancy, charged him with the reasonable value of the rents and profits of the premises, and found that there was due him from the plaintiff $3,739.67, and decreed that, unless the plaintiff should pay said sum within 90 days, the premises might be sold as on execution to satisfy the judgment, and that, if the amount should be paid within the time fixed, the defendant should convey the premises to plaintiff subject to the mortgage thereon.

It will be observed from the above statement that the question at issue in this case depends largely on a finding of fact as to the agreement and understanding existing between plaintiff and defendant at the time plaintiff assigned the land contract to defendant on which the deed to the premises was procured. There were two witnesses to the conversation that took place between plaintiff and defendant which led up to the witnesses was interested in having the title perfected that they might procure a loan upon the land. Each of them stated that the agreement was as contended for by plaintiff; that plaintiff suggested that defendant might have the deed made in his own name, and that he might take possession of the land, and hold it until the entire indebtedness was paid. While we understand that, in order to show that a deed absolute in form was intended as a mortgage, the proof must be clear, convincing, and consistent with the known facts; yet we think in the case at bar the findings of the trial judge on this question are fully warranted by the testimony required by this rule. Where the consideration for a deed absolute in form is shown to have been the security of an indebtedness existing between the grantor and grantee, and where, after the execution of the instrument, the relation of debtor and creditor still exists, such conveyances are universally held mortgages rather than deeds absolute. In the instant case the proof shows that after the assignment of the contract and the delivery of the deed the defendant retained the notes which he had paid for plaintiff, and did not return them canceled and satisfied. While he says that he did this merely through inadvertence, yet we think this fact, in connection with the overwhelming weight of the evidence as to the understanding between the parties at the time the assignment was made, is fully sufficient to sustain the judgment of the trial court.

It is therefore recommended that the judgment of the district court be affirmed.

AMES and HASTINGS, CC., concur.

PER CURIAM. For the reasons stated in the foregoing opinion, the judgment of the district court is affirmed.

MIZNER v. SCHOOL DIST. NO. 11 OF SHERMAN COUNTY et al.

(Supreme Court of Nebraska. Oct. 7, 1903.)

SCHOOL DISTRICTS.

1. Former opinion, reported in 96 N. W. 128, adhered to.

"Not to be officially reported."

On rehearing. Affirmed.

For former opinion, see 96 N. W. 128.

ALBERT, C. A reargument of this case has not changed our views as expressed in the former opinion, reported in 96 N. W. 128, and it would serve no useful purpose to reiterate them.

It is therefore recommended that the former judgment affirming the decree of the district court be adhered to.

BARNES and GLANVILLE, CC., concur.

Digitized by Google

appearing that the adoption of the recommendations made will result in a right decision of the cause, it is ordered that the former judgment affirming the decree of the district court be adhered to.

HASKELL v. READ et al.

(Supreme Court of Nebraska. Oct. 7, 1903.)

CORPORATION—ELECTION OF OFFICERS.

1. Whether less than a majority of the shares of stock in a corporation having a fixed capital stock, divided into a definite number of shares, may hold a valid meeting and bind the corporation, in the absence of any rule upon the subject, left undecided.

2. Whatever may be the rule in case of stated meetings, or those regularly called or convened, a minority of the shares, after failure of the stated meeting for election of officers, cannot call a new meeting on their own authority, and hold a valid election.

(Syllabus by the Court.)

Suit by Riley E. Haskell against Henry B. Read and others. Motions for rehearing. Denied.

For former opinion, see 93 N. W. 997.

POUND, C. It sometimes happens that a proposition, true enough in respect of the case in hand, is put in a general form which not only is broader than the decision to be rendered really requires, but is open to question in point of law. We think we fell into such an error in our former opinion in this cause. We stated, citing a well-known text-writer, that "where a corporation has a fixed capital stock, divided into a definite number of shares, a majority of all the shares is necessary to a valid election, in the absence of some rule to the contrary." Upon further examination, we find that the authorities cited do not entirely sustain the conclusion of the learned author, and that the question is one upon which there is some conflict of opinion. It is not essential to a disposition of the case at bar to pass upon that question, and we are of opinion that it should be left open.

The circumstances out of which the controversy as to the election arises are these: After the district court had issued a temporary injunction, restraining Read from voting the 22 shares of stock in controversy, the annual meeting for election of officers came on. Upon production of the order of injunction, it became substantially impossible to hold an election, as the shares which could be voted were evenly divided between the contending factions, assuming that Haskell could vote the 2 shares he had pledged. Under these circumstances, all the stock being present, Read, as president, adjourned the meeting until the injunction proceedings could be determined. We are inclined to think that this was within his powers as ever this may be, the only proper course for those who objected was to appeal from the ruling and put the matter to a vote. Proctor Coal Co. v. Finley, 98 Ky. 405, 33 S. W. 188. It did not authorize the plaintiff and his faction, after lapse of some time, to convene what was in effect a new meeting, and hold a valid election. Whatever may be the rule in case of stated meetings, or those regularly called or convened, a minority of the shares, after failure of the stated meeting for the election of officers, cannot call a new meeting on their own authority, and hold a binding election. To permit this would be to concede to a minority of the shares the power to govern the corporation. This is not a case where a majority withdraw from a meeting regularly convened, and suffer the minority to conduct it. Right or wrong, the president had adjourned the meeting in the presence of all the stockholders, and no appeal had been taken from his ruling. The attempt of plaintiff, after some time spent in consultation, to hold the meeting with less than a majority, was to all substantial purposes a new meeting.

We therefore recommend that the motions for a rehearing be denied.

BARNES and OLDHAM, CC., concur.

PER CURIAM. For the reasons stated in the foregoing opinion, it is ordered that the motions for a rehearing be denied.

TRACY v. SUPREME COURT OF HONOR.

(Supreme Court of Nebraska. Oct. 7, 1903.)

BENEFICIAL ASSOCIATIONS—ISSUE OF CHARTER.

1. Former judgment adhered to.

"Not to be officially reported."

On rehearing. Affirmed.

For former opinion, see 93 N. W. 702.

DUFFIE, C. A careful re-examination of the record in this case, and full consideration of the brief and argument presented by the parties, have not served to change our former views. Sections 3 to 11 of article 8 undoubtedly refer to new members initiated into an existing lodge, and have no reference whatever to charter members. We again quote section 12 of article 8 as follows: "The first liability of the benefit member of a new district court shall be for that benefit assessment next levied after the date of the charter and the date of the initiation of the members thereof." This section, as its language imports, fully defines the rights and liabilities of a charter member. The sections immediately preceding relate to the application, acceptance, and initiation of new members in a duly constituted lodge or court, and have, we think, no application whatever to charter members of a newly instituted lodge

Digitized by Google

article 14, relating to the institution of a new lodge, which we again quote:

"Section 1: Petitions for charters shall be in such form as the supreme chancellor may prescribe and shall be signed by at least ten applicants of good physical and mental qualifications and of strictly temperate habits and accompanied by a charter fee as hereinafter provided.

"Section 2: On receipt of the petition and fee and the applications and supreme medical director's report on each petitioner, the supreme chancellor may, if in his judgment it will be conducive to the best interests of the order, supply a charter, rituals, benefit certificates and necessary blanks for the clerical work of a district court, and authorize the institution of the same forthwith.

"Section 3: The instituting officer shall before proceeding with the institution of the district court know that the requisite number of petitioners have passed a favorable examination and see that all papers are in due form and that the laws of the order are complied with. He shall before an election is held, explain the duties of each officer of the district court and shall install and instruct the officers elected in their respective duties and exemplify to them the secret work of the order and explain the requirements of the order as to the payment of assessments and per capita tax and also in relation to the adoption and approval of by-laws."

In these provisions for the institution of a new court, it will be seen that an examination of the charter members by some physician is contemplated, whose report must be approved by the supreme medical director. If the supreme chancellor decides to grant a charter, he is then to supply a charter, rituals, benefit certificates, and necessary blanks for the clerical work of the district court, and authorize the institution of the same forthwith. These provisions of section 2 clearly contemplate that the benefit certificates for charter members shall be forwarded to the new court with the charter. The members are initiated by the instituting officer, and these members then elect officers of the new district court. Nothing is plainer to our minds than that these charter members are full members of the order, entitled to all its benefits, and, as said in section 12 of article 8, "their first liability is for that benefit assessment next levied after the date of the charter and the date of the initiation of the members." That the benefit certificates in this particular instance did not accompany the charter, and were not delivered to the charter members at the date of the institution of the new court, was no fault of the members themselves, and could not legally deprive them of any right to which the constitution of the order entitled them. The decedent was a charter member. He was present at the institution of the court, was initiated at that time, became a full member

The failure of the supreme chancellor to furnish benefit certificates to members of the court at the time the charter was forwarded and the court instituted ought not to work to the disadvantage of any member of the court.

We recommend that the former opinion be adhered to.

POUND and KIRKPATRICK, CC., concur.

PER CURIAM. The conclusions reached by the Commissioners are approved, and it appearing that the adoption of the recommendations made will result in a right decision of the cause, it is ordered that the former judgment in this case be adhered to.

BRADT v. HARTSON et al.

(Supreme Court of Nebraska. Oct. 7, 1903.)

SPECIFIC PERFORMANCE—FRAUDULENT CONTRACT—PAROL CONTRACT.

1. One who claims to have entered into a contract for the purchase of land from a fraudulent grantor, with notice of the fraud, and the understanding that the fraudulent grantee will convey to him, cannot enforce the contract against such grantee, or those claiming under him.

2. Evidence examined, and *held* that it fails to establish a delivery of the written contract sued upon.

3. A verbal contract for the conveyance of land cannot be enforced when it is shown that no change of possession has taken place in pursuance thereof.

Commissioners' Opinion. Department No. 2. Appeal from District Court, Holt County; Westover, Judge.

"Not to be officially reported."

Action by George W. Bradt against Nelson Hartson and another. Judgment for defendants, and plaintiff appeals. Affirmed.

M. P. Kinkaid, for appellant. A. F. Mullen and M. F. Harrington, for appellees.

GLANVILLE, C. This is an appeal from the district court of Holt county by the plaintiff in an action commenced by him for the specific performance of a contract for the sale of certain land in that county, wherein the defendant had judgment. Prior to the date of the alleged contract the title of the land stood of record in the name of defendant George M. Smith, but it had previously belonged to the defendant Nelson Hartson. The contract sought to be enforced is alleged to have been made between the plaintiff and Hartson. The plaintiff's testimony and that of his witnesses in regard to the transaction, if true, clearly establish that prior to the signing of the alleged contract, and in the negotiations leading up thereto, the defendant Hartson told the plaintiff that the title to the land was in the name of the defendant George M. Smith, but that Smith did not have a dollar in the land; that he had put the title in Smith under circumstances and

Digitized by Google

the property to Smith in trust for Hart-
n. If this be true, Hartson had no inter-
t in the land that he could enforce in any
urt of law or equity; neither had he any
terest that he could convey to the plaintiff
mere volunteer, with full knowledge of
e fraudulent character of the alleged trust
ıder which he claimed the defendant Smith
ld the title), and thus empower the plaintiff
enforce the trust. The plaintiff still in-
ıts that the evidence establishes the above-
ıted condition of fact, and that the same
titles him to the relief sought. It requires
ither argument nor citation to make the
ıtement that he cannot prevail under such
cumstances, and because of the above
cts, satisfactory to this court and the bar
the state.

There is another reason why the plaintiff
annot prevail, while basing his right upon
e alleged written contract between him
d Hartson. The evidence entirely fails to
ow that the contract or writing was ever
livered to the plaintiff. It never came into
ı possession, but was signed in the pres-
ce of, and left with, a Mr. Bright, of
Neill; and the plaintiff expressly and par-
ularly insists and swears that Bright was
ver his agent for any purpose or in any
ınner, but that he was the agent of Hart-
ı. It is reasonably certain, from the word-
; of the contract and the evidence pro-
ced, that other things were to be done, and
ıer papers furnished, before the contract
ould be binding. See Wier v. Batdorf, 24
b. 83, 38 N. W. 22, and Soward v. Moss,
Neb. 71, 80 N. W. 268.

While the plaintiff insists that he took pos-
sion of the property because of the con-
ct, the evidence does not establish this
t, for he was already in possession, and
ther Hartson nor Smith is shown to have
ıe any act which could be construed into a
ivery of possession of this property to the
intiff under any contract for the sale
reof.

The plaintiff and his witnesses testify that,
ne time after the alleged making of the
ıtract with Hartson, the defendant Smith
ne to his place and claimed to be the
ner of the land, but after being informed
plaintiff that he had purchased it from
rtson for $400, and that Hartson had told
intiff that he (Smith) did not have a dol-
in the land, plaintiff entered into a verbal
ıtract with Smith, whereby Smith agreed
deed him the land upon the payment of
0, together with a year's interest, which
erest, it seems, would not be due under
contract with Hartson. This Smith de-
s, but if established, would it sustain the
intiff's action? The contract with Smith
pleaded in the way of an estoppel in the
ly. The title was in Smith; the agree-

contract; no money was ever paid thereon; there is no evidence that any improvements were put on the land in reliance upon this contract, or with the knowledge and consent of the defendant Smith; and there is nothing in the evidence which tends to establish any such part performance of this alleged verbal contract with Smith as would take it out of the statute of frauds. See Lewis v. North, 62 Neb. 552, 87 N. W. 312, where it is held by this court that, "in order to justify a decree of specific performance of a verbal agreement for the sale of real estate, the acts of part performance relied on to escape operation of the statute of frauds must be clearly, definitely, and satisfactorily shown, and it must also appear that such acts were done with reference to and in pursuance of the contract. Continued possession by a tenant is not such a part performance of a verbal contract for the purchase of land as to take the case out of the statute of frauds. Possession, to have such an effect, must be clearly shown to refer to and result from the contract, and not the lease. The above rule held to apply when the alleged vendee was occupying the land as a former owner." This proposition is too thoroughly well settled by adjudications in this and other states to need further citation in support thereof. The plaintiff cannot, then, prevail in this action because of any such verbal contract, if made.

The bill of exceptions in this case is very voluminous, and no good purpose would be subserved by a detailed review of the evidence. We will say, however, that it appears that the defendant Hartson, who had at one time been wealthy, had lost nearly all of his property; that he was getting old; that he had at one time been in an insane asylum; and, from his examination on the witness stand, we are satisfied that his mind was somewhat shattered, and that the plaintiff is not entitled to a reversal of the case because of anything strange or inconsistent in the testimony of the defendant Hartson, and that Hartson's evidence does not help plaintiff make his case.

We are satisfied that the findings and judgment of the trial court are right, and, upon an examination of the plaintiff's evidence alone, would have felt compelled to make the same decision. The plaintiff has failed to prove a case justifying a judgment in his favor.

ALBERT and BARNES, CC., concur.

PER CURIAM. The conclusions reached by the Commissioners are approved, and, it appearing that the adoption of the recommendations made will result in a right decision of the cause, it is ordered that the judgment of the district court be affirmed.

Digitized by Google

against Snow Bros. the sum of $2,407.55 and interest, and to Symms Grocery Company $1,318.48 and interest. In rebuttal the plaintiff produced a witness, and propounded questions in regard to the consideration for the notes and mortgage, which was objected to on the ground that it was not proper rebutting testimony, and the objection sustained, to which plaintiff excepted. The plaintiff then offered to prove by the witness that Snow Bros., in making the mortgage to the plaintiff "had no intention of cheating or defrauding their creditors," and "that the notes secured by the chattel mortgage given by Snow Bros. to Mrs. Parker (the plaintiff) were given for money borrowed by them from the said Parker." This evidence was objected to on the ground that it was not proper rebutting testimony, and the objection sustained, and the evidence excluded. The defendant, who is now the plaintiff in error, in his brief says, "We therefore must admit that plaintiffs made a prima facie case by their evidence in chief." It would seem that there is just ground for this admission, and it follows that the objection to evidence offered as not proper in rebuttal was not well taken, so that the plaintiff in error is in the position of asking for a reversal of the judgment of the trial court for the want of evidence which he himself caused to be excluded. He complains that the most important question in the case has not been tried, and that in the interests of justice the judgment ought to be reversed, so that the question of the good faith of the mortgage can be investigated. It is, of course, conceded that the proper time for this investigation was upon the trial already had. The plaintiff below sought to have this investigation in that trial, and the defendant below, who is now complaining of this judgment, prevented that investigation. By his conduct upon the trial he has committed himself to the position that a just determination of the case did not require the investigation of the consideration for these notes, and he clearly cannot now change that position and insist that the parties be put to the expense and annoyance of another trial to investigate that question. Bigelow on Estoppel (3d Ed.) 601.

It is insisted that the offer of proof was not broad enough, and that, if the matters offered had been proved, the evidence would still be insufficient to support the verdict. But no proof of good faith of the parties in executing and receiving the notes and mortgage in question could be satisfactory or sufficient without showing the consideration; and this evidence, having been properly offered and refused, such ruling in effect excluded all evidence of good faith in the transaction. This is particularly so when evidence that the mortgagors had no intention of cheating or defrauding their creditors.

It is insisted that the in the record which req the judgment. There is i a considerable discussion evidence in showing fraud as bearing upon the cont tiff in error that the verdi by the evidence, but in a ment it is sufficient to say shown that the notes and cuted to the plaintiff for paid therefor, and withou the part of Snow Bros. to itors, the whole evidence i not have been insufficient dict.

Eight of the instruction in a general way, challe and error is assigned up several requested instructi find any error of the cour

Other points discussed i raised by the petition in the court which are ment as erroneous are not show sons are given for some urged, and we do not find ing a reversal of the case.

The judgment entered hearing is vacated, and the district court is affirmed.

STATE ex rel. GORDON v

(Supreme Court of Nebrask

RES JUDICATA—ELECTION—T —POLICE JUDGE—S

1. A judgment establishing an election attempted to be m election in 1899 does not rend tween the same parties the pc an election at the general elec if there be no change in the validity of such election.

2. An election provided for take place by the Constitutio the required time without providing therefor.

3. *Held*, that a successor t office of police judge has been ified, that relator was not such office during the time for ing herein to enforce paymer that the writ prayed for was

(Syllabus by the Court.)

Commissioners' Opinion.

2. Error to District Court, Day, Judge.

Application by the state, of Samuel I. Gordon, for wr to Frank E. Moores and c judgment denying the writ, error. Affirmed.

¶ 2. See Constitutional Law, vol 32.

Digitized by Google

Connell, for defendants in error.

GLANVILLE, C. This action is before us on petition in error from the district court of Douglas county seeking to reverse the judgment of that court denying a peremptory writ of mandamus to the relator to compel payment of salary to him as police judge, and constitutes one more chapter in the long-standing contention and litigation whereby the relator has sought to continue to hold the office of police judge of the city of Omaha at a salary of $2,500 per year. In the view we take of the case in its present condition, and of the questions involved, it will be necessary to take up the previous adjudications, and discuss them, with a view of distinguishing those points that have become res judicata from those that are open to determination in this action.

Contention is made by the respondents herein that the relator was not elected and qualified as police judge at the beginning of his term of service, in January, 1896. We think the bill of exceptions clearly establishes such election, if it were an open question, but we think it also establishes that he was not qualified as a de jure officer at that time, except by the evidence therein contained, showing that this question has been heretofore adjudicated in his favor. We say this because it is clearly shown that the oath of office subscribed by him after his first election was not the oath required by the Constitution, and that he did not properly qualify. See Duffy v. State, 60 Neb. 812, 84 N. W. 264.

Because of a provision in the Omaha charter of 1897 attempting to provide for the election of a police magistrate for the term of three years in April, 1897, and every three years thereafter, an election for such office was attempted in April, 1897, and no election for such office was held in any manner at the general election in November of that year. At such attempted election in April the relator received the majority of the votes, was declared elected, and attempted to qualify; and thereafter respondents contended that he was entitled to a salary of but $1,200 per annum, being the salary fixed in the 1897 charter. After it was announced in State v. Stuht, 52 Neb. 209, 71 N. W. 941, that the term of office of police judge could not be changed from two years to three years, because of the provisions of our Constitution, the respondents paid the relator the salary fixed by the old charter to the expiration of his first two-years term. Relator continued to perform the duties of the office of such police magistrate during the years 1898 and 1899, the respondents regularly making for his use a warrant of $100 for each month, which, however, he did not accept, and he finally brought mandamus proceedings in the district court of Douglas county to compel payment for the two years was brought to this court and decided in favor of relator; being the case of State v. Moores, 61 Neb. 9, 84 N. W. 399. The complete record in that case forms a part of the bill of exceptions in this, and, from its examination, we think it has become res judicata that the relator was elected and qualified for his first term, and has also been established as the law that during the continuance of that term the relator is entitled to a salary at $2,500 per year. For the regular election held in the city of Omaha, 1899, nominations were made for the office of police judge, and the relator was a nominee. An election was held, resulting in the relator's receiving a majority of the votes cast. He so far acquiesced in this as to give bond and take the oath of office, and in this instance did take the oath prescribed by the Constitution for judicial officers. An attempt was made to remove him from office, but the proceedings were held under a void provision of law, and nothing affecting the rights of either party could be determined therein. See Gordon v. Moores, 61 Neb. 345, 85 N. W. 298.

Another action was commenced by relator to compel payment of his salary for the year 1900, and was brought to this court and decided in his favor in Moores v. State, 63 Neb. 345, 88 N. W. 514. In the opinion by Oldham, C., it is said: "In the court below, respondents, by their answer and return, tendered the issue that the relator was the acting police judge of the city of Omaha for the year 1900, and that he was entitled to a salary at the rate of $1,200; but in this court counsel for respondents abandoned that issue," etc. The record in that case is also a part of the bill of exceptions, and therein plea is distinctly made by the return to the writ that the relator became elected in 1899 and qualified, and that he was not holding over at that time, but was in for a new term under a new election, and that the salary fixed by the charter of 1897 is the salary he was entitled to. In reply to the return the relator pleaded res judicata by the judgment in State v. Moores, 61 Neb. 9, 84 N. W. 399. It will be seen, then, that it has thereby become res judicata either that the charter of 1897 was ineffectual to change the rate of pay of the police judge, or that the relator during the year 1900 was still holding over by virtue of his first election and qualification, and his subsequently qualifying as a hold-over officer.

The bill of exceptions in the last-named case is made a part of the bill of exceptions in this case, and the evidence therein contained shows that the relator was regularly nominated by the People's Independent and Democratic parties as a candidate for police judge of Omaha, to be voted for at the November election, 1899, and that, if such election could then be held, he was elected, and in due time entered a bond reciting such election, and

Digitized by Google

udgment therein, and it was thus established that during the year 1900 the relator "was holding over," we do not think that it could be thus authoritatively determined that no election for a police judge of the city of Omaha could take place at the proper one of the general elections provided for in the Constitution, in the absence of any special legislation providing for the holding of such election. Thereafter a similar action for the salary for 1901 was commenced, carried to this court, and decided in favor of the relator in the case of Moores v. State, 93 N. W. 733. The record in this action is also a part of the evidence contained in the bill of exceptions, and shows that the relator pleaded previous adjudication by the decision in the case in 61 Neb. 345, 85 N. W. 298; and it was correctly decided in favor of the relator because of the previous adjudication pleaded, as no new fact or issue entered into the case, except such previous adjudication.

The present action is another one of the same nature, brought for the purpose of enforcing payment of a salary to relator at the rate of $2,500 per year since the expiration of the term which would have commenced in January, 1900, had the election in November, 1899, been lawful, and the relator's incumbency during 1900 and 1901 been under such election. Another election was attempted at the general election in November, 1901, which, if such election was authorized, resulted in the election of Louis Berka to the office in question, over the relator, who was also a candidate. Mr. Berka qualified according to law, and has been recognized by the authorities and people of Omaha as the incumbent of the office since January 7, 1902; and, if such election was valid, he is de jure, as well as de facto, police judge of Omaha, and the judgment of the district court is right; if such election was invalid, then the relator, having been found by previous adjudication to have been elected and qualified and the de jure incumbent of the office during 1900 and 1901, is still the de jure incumbent of the office under the same hold-over term, and is entitled to the same salary heretofore required to be paid to him.

The only matter, therefore, that requires examination and discussion herein, is the validity or invalidity of the election in November, 1901. As we have said, so far as establishing the right of the relator to the old salary during the years 1900 and 1901, the decision in 63 Neb., 88 N. W., followed by the one in 93 N. W., is conclusive, and renders res judicata the invalidity of the election in 1899; but the law of the state, and especially that contained in the Constitution, cannot be foreclosed in such a proceeding to such an extent as to preclude our holding any other election valid which we may find on the law and evidence to be so,

this action, and that the
judicata made in this ac
to this issue.

By section 18, art. 6, c
it is provided that "justic
police magistrates shall b
such districts * * * a
by law." In State v. Stu
N. W. 941, and State v.
84 N. W. 399, above refe
that the police judge of
police magistrate. It follc
city of Omaha is a distric
wherein such magistrate
If by the changes in the
does not continue to exi
claimed to be held by th
abolished, and there is no
istrate. Section 20 of the
Constitution reads as follc
provided for in this articl
offices until their successo
fied and they shall respecti
district, county or precinc
shall be elected or appoint
office of all such officers, w
prescribed in this article, sl
All officers, when not other
in this article, shall perforr
receive such compensation
ed by law." This section
tion is the one under the pr
the relator insists that he is
as one of the officers therei
was under consideration in t
above mentioned; and it w
in the case of State v. Stuht
not directly in issue, that t
term of police judge of Om
changed from the regular tv
the Legislature.

Section 13, art. 16, reads a
general election of this sta
on the Tuesday succeeding
of November of each year,
general election which shall
Tuesday in October, 1875. A
county, precinct and townshi
Constitution or laws made
people, except school district
nicipal officers in cities, vill
shall be elected at a genera
held as aforesaid. Judges
district, and county courts, a
ty and precinct officers, and
officers, the time for the el
is not herein otherwise pr
which are not included in t
tion, shall be elected at the fi
tion, and thereafter at the
next preceding the time of th
their respective terms of o
that the office of no count
shall be vacated hereby." S
same article reads: "The te

Digitized by Google

supreme, district and county courts, and regents of the university shall begin on the first Thursday after the first Tuesday in January next succeeding their election, the present state and county officers, members of the Legislature, and regents of the university, shall continue in office until their successors shall be elected and qualified." It will be noticed that police magistrates are to be elected in such districts as are provided by law; that district officers are to be elected at general elections, unless they are within the exceptions mentioned in the above section of the Constitution; and that, unless the police judge of Omaha is a municipal officer of the city, his election is required to take place at the general election provided for. It was held in State v. Shropshire, 4 Neb. 411, that a justice of the peace elected in a ward of Omaha was required by law to hold his office within the ward which constituted a precinct; and it was held, in effect, that such ward had been created a district within which a justice of the peace should be elected. While the term "precinct" is used in section 20 of article 6, only "districts" are mentioned in section 18. It would seem that the word "district," as used in the Constitution in reference to general elections, must refer as well to districts created by the Legislature as those provided for in the Constitution, because it excepts specially "school district officers," thus mentioning a district that must be created by the Legislature, but which would be included in the requirement unless so specially excepted. We are of the opinion that a police magistrate is a district officer, and not a municipal officer of a city, within the meaning of the Constitution; that the relator having been elected for a term of two years, to commence in January, 1896, at the regular election held in 1895, regular elections for police magistrate in the district comprising the city of Omaha should be held every two years thereafter; that the office and the district still existed in 1901; that the above-quoted provisions of the Constitution are so far self-enforcing that an election held to fill such office, participated in generally by the people of Omaha at the general election in 1901, was a valid election for that purpose, in the absence of any provision made by the Legislature for holding elections for such office in that district; that Louis Berka was elected at such election, and qualified as required by law, and became and is the successor in office to the relator, and was the incumbent of such office during the time for which the relator is herein seeking to compel payment of salary; that relator's term ended upon the qualification of Louis Berka; and that the judgment of the district court in denying an imperative writ of mandamus to the relator is right, and should be affirmed.

To hold that the Legislature can provide a district in which a police magistrate can be and is lawfully elected for a term of two providing for the election of a successor, and, by so doing, prevent any further elections, and still continue the district and office in existence, and thereby indirectly make the incumbent's term perpetual, when we have held that it cannot be directly extended to three years, would be intolerable and destroy the safeguards of the Constitution, and we cannot so hold. Our Constitution provides, by section 22 of the Bill of Rights, that "all elections shall be free; and there shall be no hindrance or impediment to the right of a qualified voter to exercise the elective franchise." The electors of the city of Omaha were not disfranchised, or deprived of their right to elect a police magistrate in their district at the election provided in the Constitution for that purpose, by a failure of the Legislature to make any special provision for such an election. See Hall v. Commonwealth, 94 Ky. 322, 22 S. W. 333.

We recommend that the judgment of the district court be affirmed.

ALBERT and BARNES, CC., concur.

PER CURIAM. For the reasons stated in the foregoing opinion, it is ordered that the judgment of the district court be affirmed.

CHICAGO, B. & Q. R. CO. v. GIFFEN.

(Supreme Court of Nebraska. Oct. 7, 1903.)

RAILROAD RIGHT OF WAY—LICENSEE—NEGLIGENCE—QUESTION FOR JURY.

1. The proprietor of an elevator built upon the right of way of a railroad company by permission of the company is a licensee upon the premises, and must operate his elevator, loading cars therefrom, subject to the right of the company to handle its trains and use the track for switching purposes in the ordinary and usual way of doing such work.

2. The plaintiff, an employé of an elevator, was filling a car with grain when interrupted by the switching operations of a freight train that arrived at the station during his work. The partly filled car was moved easterly along the track, and finally returned to the elevator, and left standing with two other cars attached, and to the west of the partly filled car. The brakeman in charge asked the plaintiff if the car was placed in the right position to be filled, and plaintiff replied that it was not, but was as nearly right as they could place it, and that he would "pinch" it into position with a crowbar. The plaintiff then uncoupled the partly filled car from the one standing west of it, climbed to the top of the car, and loosened the brake. While on the car he looked for the engine, and saw it, with some cars attached, going west on the switch track; the engine then being about to enter upon the main track. Supposing that the crew had finished the work of switching, plaintiff descended from the car, took a crowbar, and went between the partly filled car and the car standing to the west of it, and commenced the work of pinching said car into position to be filled from the elevator spout. While so engaged, another car was shunted or kicked upon the side track with such force as to drive the two cars standing on the track west of the car at which plaintiff was working up against the plaintiff, and driving the crowbar which he was

Digitized by Google

(Syllabus by the Court.)

Commissioners' Opinion. Department No. 3. Error to District Court, Fillmore County; Stubbs, Judge.

Action by George B. Giffen against the Chicago, Burlington & Quincy Railroad Company. Judgment for plaintiff. Defendant brings error. Affirmed.

J. W. Deweese and F. E. Bishop, for plaintiff in error. F. B. Donisthorpe, for defendant in error.

DUFFIE, C. Giffen, the plaintiff below, was employed in an elevator in the town of Grafton, Neb. There are two elevators on the railroad right of way, Giffen being employed in the west elevator. The facts upon which he claims to recover, omitting the formal allegations, are as follows: "That on or about the 27th day of July, 1901, and for a long time prior thereto, plaintiff had been working in said west elevator at a salary of $35 per month, and on said day there was standing on said side track at said elevator three cars, one of which plaintiff was loading with grain; the other two standing west of said loaded car, and being empty. That, while said plaintiff was loading said car, one of defendant's engines, pulling several freight cars, proceeded west of said depot on defendant's main line, and backed onto said switch, going to the east elevator for some purpose unknown to plaintiff. That in so going the said three cars as above mentioned were pushed toward said east elevator. That, after the purpose had been accomplished for which defendant's engine and cars had been pushed to said east elevator, the said engine proceeded west, pulling the two empty cars and the car almost loaded as aforesaid back to the west elevator, trying to leave the loaded car in the position it occupied before being moved east. That, after said three cars were so brought to said west elevator, one of defendant's brakemen uncoupled the said three cars from the balance of the freight train, when said freight train proceeded west. That plaintiff, discovering that said loaded car as aforesaid was not occupying a position where the loading of the same could be finished, went to the top of the loaded car—the brake having been put on by one of the defendant's brakemen—and threw off the brake, expecting that by so doing the car would move a little to the east, the grade inclining towards the east. That while plaintiff was still on top of said car he saw that said engine and the cars attached thereto were proceeding west to the main track, and plaintiff, being satisfied that the switching by said engine for said time was through, descended to the ground, and, finding that said loaded car did not move far enough east, took a crowbar and commenced to apply the same to one of the engineers, whose name is unknown to plaintiff, in connection with said freight train, discovered that a loaded car in connection therewith should also have been cut off and left on said side track, accordingly notified the engineer of said train of said fact, and, while plaintiff was engaged in trying to move said loaded car with said crowbar, and without any notice whatever of said change of plans being conveyed to him, without any of defendant's brakemen or agents in any way giving notice to said plaintiff, the said engineer, with gross negligence and extreme carelessness, and without giving any signal, either by whistle, bell, or in any other way, caused said engine to kick said loaded car back on said switch, without said car having any person or persons controlling its movements, and it was sent with such force that as it struck said two empty cars they struck plaintiff on his back, whereby said crowbar he was using in front of him was driven completely through the following muscles of plaintiff's left thigh, to wit: Gracilis abductor magnus, semimembranous, semitendenosus biceps, and the glutæus magnus." Damage was claimed in the sum of $3,000. Judgment went in favor of the plaintiff for $1,000, and the defendant has taken error to this court.

From the foregoing extract from the petition it will be seen that the action is based wholly upon the fact that the plaintiff believed that the train crew in charge of defendant's train had finished the work of switching, and were about to proceed upon their way west. Acting upon this belief, he entered between two of the cars left on the side track, and was injured in the manner stated in the petition by another car of the train being switched upon the side track and kicked against the cars behind him. The right of the plaintiff to recover, and to avoid the charge of contributory negligence, does not depend solely upon his own belief that it was safe to enter between the cars for the purpose of "pinching" one of them into the position desired; but the question is, was this belief derived from acts and declarations of the servants of the plaintiff in error, upon which he might rely, and which, in the judgment of the jury, would justify a reasonably prudent man to act as he did? As stated in Muldowney v. Ill. Cent. R. Co., 36 Iowa, 462: "The reasonable belief of a party that he will not sustain an injury in doing acts which but for such belief would be negligent does not exonerate him from the charge of negligence." The evidence discloses a state of facts which we think made it a question for the jury to say whether or not Giffen was negligent in going between the cars. Prior to doing so, the switching crew had "spotted" the car which Giffen had been filling from the elevator. This, as we under-

Digitized by Google

nearly in position to be filled from the elevator as could conveniently be done by the use of the engine. At this time the following conversation took place between Giffen and the brakeman in charge: "Q. Tell us what he [the brakeman] said? A. He asked me if the car was at the place I wanted it, and if the car was right. I told him, 'No,' and said that 'it is about as near right as you can get it.' He says, 'Shall I back up?' I said, 'No, I will pinch it with a crowbar.' He says, 'All right,' and went to the other end of the train, and I noticed the train push on out west. Q. Where did you notice it from? A. When I got up on the car I see the train going out, just heading onto the main track." We think that the act of spotting the car, and the inquiry by the brakeman if it was properly placed, indicated that the train crew was through with its work of switching, so far, at least, as not to further interfere with the car which Giffen was filling, and that Giffen, by telling the brakeman that he would pinch it into the exact position wanted, with a crowbar, gave notice to the crew that he understood that they would not further interfere with the car, and that he himself would enter between the cars and pinch it into position; thus giving them warning that he was about to occupy the dangerous position that he did under the belief that he was not to be further interfered with in his work, and calling upon them to give him notice if in the further work of switching it was necessary to move the car or to back other cars against it in such manner as to endanger him.

It is true, as argued by the company, that the owner of the elevator and his employés had a right upon the railroad ground at the elevator as licensees only, and that, being mere licensees, they undertook to do their work of loading cars at the elevator subject to the right of the company to handle its trains and use the track for switching purposes; that the company had the first and primary right, as against them, to do all the work necessary in setting in or backing up cars on this side track, whether the cars were moved by the direct movement of the engine, or whether they adopted the mode of kicking such cars onto the sidetrack. This right the company had exercised by moving the car which Giffen was filling from the elevator back and forth upon the side track as the work of switching required; and then, as is usual in such cases, it had attempted to replace the car at the elevator from which it was being filled. In the language of the switching crew, they had "spotted it," and we think that this act, together with what passed between Giffen and the brakeman in charge, was sufficient to support a finding that the company's employés had said to him, in effect: "Our work does not further require us to interfere with this car, and you may safely proceed to pinch it into position." The employés of the company knew as well as Giffen that the work of pinching the car into position required Giffen to enter between the cars, where he could neither see nor be seen; and, under such circumstances, it was undoubtedly a question for the jury to say whether the company was negligent in not ascertaining that he had entered into his dangerous position, and giving him notice of its intention to further interfere with the car at which he was at work, so that he might protect himself against danger. We conclude, therefore, that there was no error in submitting the question of negligence to the jury, and that the findings of the jury are conclusive.

We recommend an affirmance of the judgment.

ALBERT, C., concurs.

PER CURIAM. For the reasons stated in the foregoing opinion, the judgment of the district court is affirmed.

SPENCER et al. v. SCOVIL et al.

(Supreme Court of Nebraska. Oct. 7, 1903.)

WILLS—CONSTRUCTION—NATURE OF ESTATE—INVALID PROVISION.

1. A testator devised certain lands located in Nebraska, Missouri, Iowa, and Dakota to his daughter M., her heirs and assigns forever, upon the condition that she should not alienate the lands in Nebraska until she attained the age of 33, but that she might alienate the other lands with the consent of the testator's executors, and, for the purposes of such alienation, appointed the mother of M. her guardian until M. reached the age of majority; clothing the guardian with full power to transfer, on behalf of M., such title as testator possessed at the time of his decease. He then declared that, in the event of M.'s death without living issue, so much of all the lands described as she had not alienated and conveyed should go to certain other persons named. M. died after attaining the age of 33, but without issue, devising the lands in Nebraska to her husband. *Held*, that the testator intended to give to M. a fee-simple estate in the Nebraska lands, with power of alienation after attaining the age of 33.

2. Where a testator devises land to his daughter in fee simple, a subsequent clause in his will by which he attempts to devise over to others so much of the land as his daughter has not alienated during her lifetime, if she dies without living issue, is void.

(Syllabus by the Court.)

Commissioners' Opinion. Department No. 3. Appeal from District Court, Otoe County; Jessen, Judge.

Action by Ella C. Spencer and others against Charles Ford Scovil and others. Judgment for defendants, and plaintiffs appeal. Affirmed.

L. F. Jackson, Sawyer & Snell, Woolworth & McHugh, and B. M. Thompson, for appellants. O'Neill & Gilbert, for appellees.

KIRKPATRICK, C. This is an appeal from a judgment of the district court of Otoe

Digitized by Google

omitting formal descriptions of the premises levised, reads as follows:

"I give and devise to my daughter Minnie Iawke [certain property in Nebraska, in Missouri, in Iowa and Dakota], together with ll and singular the tenements, hereditanents and appurtenances unto all and each f the above mentioned and described premses, in 'Item Sixth' of this instrument reerred to, belonging or in any wise appertaining; upon the express condition, however, hat the said Minnie Hawke shall not grant, argain, sell, convey, mortgage or otherwise ncumber or permit to be encumbered, or sold ny of the premises described in said 'Item Sixth,' until she shall have attained the age f thirty-three years, except the timber land ituated in * * * Missouri, and her undiided land situated in * * * Iowa, and he mineral lands * * * in Dakota, may e by her granted, bargained, sold, released, uitclaimed or demised with the assent and pproval of my executors of this my last will nd testament, hereinafter named, the surivors or survivor of them, expressed in the leed, lease or other instrument alienating he same, without the aid of a court of equiy, and to that end, I do hereby appoint Elizaeth A. Hawke, her mother, guardian of my aid daughter, Minnie Hawke, until she shall ave arrived at the age of majority, for the urposes of her person and the conveyancing y her, leasing and selling of said last-menioned property, and with full power and auhority to execute and deliver, in the name f my said daughter Minnie Hawke, until he shall attain the age of majority, as such uardian, all necessary deeds, conveyances, eases and other muniments of title, to asure to the purchasers such title therein as possessed at the time of my decease, and ntil the said Minnie Hawke shall arrive at he age of thirty-three years, it is my will nd I do hereby direct and request my said xecutors, the survivors or survivor of them, o enter into and upon the above-described remises, situated in the state of Nebraska, eferred to in said 'Sixth Item' of this intrument, and to lease and farm let the same, or the use, benefit and behoof of my said aughter, Minnie Hawke, and [after deductig certain charges] * * * pay to my aughter's guardian for her use, the balance f such rents, issues and profits from time o time, until she shall arrive at her majoriy, and afterwards to her as the same shall ome to the hands of my executors, they harging to the rest, residue and remainder f my estate such reasonable sum annually or their services in that behalf as will be a ust compensation therefor.

"To have and to hold all and singular, the remises in 'Item Sixth' of this my last will nd testament, unto my said daughter Minnie Iawke, subject only to the limitations here-Hawke, shall depart this life, either before or after my decease, having no issue of her body born, her surviving, it is my will, and I do hereby order, direct and require, that all the above-mentioned premises described in said 'Item Sixth' not by her alienated and conveyed previous to her death, shall descend to and be divided between my beloved wife, Elizabeth A. Hawke and my daughters Ella Spencer, and Lulu Hawke Rector, and their heirs by representations, share and share alike, provided that no part, parcel or portion of said property shall descend to and be vested in any child or children of my son, William Hawke, begotten upon the body of the hereinabove mentioned Sadie Gladstone."

The appellants are the devising over claimants under the above-quoted item, Ella C. Spencer and William Hawke; the appellees being Charles Ford Scovil, the husband of Minnie Hawke, who is the devisee of the Nebraska lands described in the will, under the last will of Minnie Hawke, deceased, his wife, and certain other heirs of Robert Hawke, who were made defendants because of the alleged interests claimed by them in the premises. Minnie Hawke died after attaining the age of 33 years, and after her marriage to Scovil, leaving no issue surviving her; and appellants brought this suit for partition of the Nebraska lands, seeking to bar Scovil of his claim under the will of his deceased wife. The appellants' petition in the lower court was demurred to, the facts above mentioned being admitted to be true, and the will of Robert Hawke being made a part of the petition and subject to the same demurrer, which was by the trial court sustained, and the cause is presented in this court for determination.

The only property in controversy in this proceeding is that located in Nebraska. The question presented is whether the attempted devise over is valid, or, stated differently, did Minnie Hawke, under the terms of item sixth, take such a title in the Nebraska lands as empowered her to devise the lands to her husband, and thus defeat the executory devise? A right decision of this question depends upon a correct answer to two inquiries—what was the intent of the testator? and is there any obstacle to the enforcement of that intent?—a question of fact and a question of law.

A rule always jealously enforced by the court is that the intent of the testator must be carefully ascertained. No court will add to or subtract one word, or twist or strain an existing word, in order to condemn or save from condemnation a bequest clearly contained in the will. In this important inquiry the language of the will is the only evidence of the intent. Counsel, in their able and somewhat voluminous briefs, have stated their various contentions in many forms, but we

Digitized by Google

think the principal contentions may be stated briefly as follows: On behalf of appellants it is contended that by the will Robert Hawke intended to give to his daughter Minnie a life estate in the lands in controversy, or perhaps an estate upon a conditional limitation, determinable upon her death without issue, with an executory devise or remainder over to appellants. On behalf of appellees it is contended that Minnie, under the will, took an estate in fee simple in the Nebraska lands, and that therefore the devise over must fall for repugnancy, in harmony with the rule that there can be no limitation over after an estate in fee simple. We do not understand that there is any substantial conflict between the parties to this controversy as to the rule that, where a testator has once clearly vested in a legatee a fee simple absolute, subsequent clauses will not operate to cut down such an estate to a lesser fee, such clauses being held void for repugnancy. It seems to us that as to this proposition there is no discord between the cases cited by both appellants and appellees. The parting of the ways is arrived at in the application more of rules of construction than of positive rules of substantive law. This may perhaps be indicated by a brief excerpt from Sheets' Appeal, 52 Pa. 257, cited by appellants in their reply brief: "Subsequent provisions will not prevail to take from an estate previously given qualities that the law regards as inseparable from it, as, for example, alienability; but they are operative to define the estate given, and to show that what without them might be a fee was intended to be a lesser right." Similar language, also quoted in appellants' brief, occurs in Eaton v. Straw, 18 N. H. 320: "There can be no limitation over after an absolute fee, but an attempt to constitute a limitation over, after language which might otherwise be construed to convey an absolute fee, may serve to give a construction to that phraseology, and show that such an estate was not intended." We think that these excerpts recognize the essential repugnancy between an estate in fee in the first taker, and an attempted devise over. While some question is made of the reasonableness of this rule, although sustained by many authorities, and some citations are made which plainly question its soundness, we will for the present assume it to be the rule applicable in this case, inasmuch as appellants seemingly base their case upon the assumption that Minnie Hawke took a base or determinable fee in the Nebraska lands, in consequence of which, under the rule stated, the devise over would be good. It seems equally apparent to us that appellees have based their entire argument upon the proposition that the devise over to appellants is valid if Minnie Hawke took less than a fee-simple absolute in the lands in controversy, and have labored to show that the estate in her vested is one in fee simple, with unlimited power of disposition. We are brought, therefore, to the question of fact already suggested, namely the estate intended to be given to Minnie Hawke in the Nebraska lands. Our understanding of the language of Robert Hawke's will may be shown by rearranging the collocation of the directions in the item quoted, reading the item as if it said: "I give to Minnie the lands described in Nebraska, Missouri, Iowa and Dakota, to have and to hold all and singular unto the said Minnie, her heirs and assigns forever, subject only to the following conditions: The lands in Missouri, Iowa and Dakota, may be by her alienated with the assent of my executors, and until she arrives at her majority, any such alienation shall be through her mother, hereby appointed her guardian, who shall have full power and authority before Minnie's majority to transfer on behalf of her such title as I possessed therein at the time of my death. But the said Minnie shall not alienate or encumber any of the lands in Nebraska until she shall have attained the age of thirty-three years, and until then I direct that my executors shall take possession and manage the same, paying the profits to her." As Minnie Hawke attained the age of 33 years, we may disregard the restriction upon her power of alienation until attaining that age, except so far as it may be necessary to consider it to ascertain the intent of the testator. As the lands outside of Nebraska are not in controversy, the directions concerning them are likewise only interesting in so far as they may enlighten the mind on the question of intent.

Appellants contend that Minnie Hawke was given a base or determinable fee in the Nebraska lands, which would ripen into a fee upon the birth of issue surviving her, and, dying without living issue, would vest absolutely in the devisees over. To sustain this contention, they read the devising over clause as if it said: "In the event of her death without issue, then all the lands in Nebraska [that is, the lands regarding which no power of alienation was given] shall go to," etc.; restricting the words "not by her alienated and conveyed" to the other lands devised. The argument assumes that she was not by the will empowered to alienate the Nebraska lands in fee simple, and, if we have not misapprehended counsel, the warrant for this assertion is to be found in the fact that the testator did in express terms provide for the alienation by her of all the lands outside of Nebraska. There is no necessity, it is urged, to infer a power to sell in fee the lands in controversy, because the devisee has been expressly given the power to sell certain other lands in fee, which are specifically described. We have read the language of this item many times, and cannot bring ourselves to the belief that such a construction thereof is warranted. Let us read the item as if it contained no other devise than that of the lands in Nebraska. It

Digitized by Google

would then give to Minnie Hawke all the ands in Nebraska mentioned therein, to her heirs and assigns forever, subject only to he condition that she should not alienate he same until she arrived at the age of 33 ears. Assuming that the item contained nothing more, would the testator not be understood by "man of plain understanding" o mean that after the age of 33 had been attained, the power to alienate would vest? f one should say to his servant, "I give you his horse, upon the condition, however, that ou shall not ride it until the first day of next nonth," the servant would be justified in ssuming the right to ride it after the limitaion had elapsed. Robert Hawke gave to Minnie Hawke the Nebraska lands, her heirs nd assigns forever, upon the condition that he should not, until attaining a certain age, do with it what she would, except for the ondition imposed, have had the right to do efore then—a right incident to the estate ranted, namely, to her, her heirs and assigns orever. After attaining the age of 33, therefore, in the absence of any words clearly ndicating a contrary intent, it must be eld that Minnie took an estate in fee simple in the Nebraska lands.

If such is the intent to be inferred from o much of the language of the item as reates solely to the Nebraska lands, what, if nything, is subtracted from the estate therein granted by reason of the fact that in the ame devise the testator also devises other ands, and makes certain specific directions with reference to them? In substance, the estator has said: "I give certain lands located in four states to my daughter, upon he condition that she shall not alienate the ands in one state until she is thirty-three ears old; but the other lands she may lienate immediately, and to that end I make er mother her guardian until she arrives at er majority for the purpose of conveying his property for her, and give to her mother ull authority to execute for her any instrument to transfer to the purchaser such title s I possessed therein at the time of my eath." Does the fact that he expressly empowers her to alienate the lands outside of Nebraska before she is 33 imply that she is o have an estate less than a fee simple in he Nebraska lands? We are unable to answer in the affirmative. On the contrary, it eems to us that, having attempted to restrict he power of alienation as to the Nebraska ands, he sought to avoid the possibility of a nisconstruction of the exception, and, to prevent its application to all the lands, expressly tated that she might alienate the lands outside of Nebraska. Then, mindful of the fact hat she was at the time of making the will nder the age of majority, he sought to provide means for the alienation of those lands efore her majority by the appointment of er mother as guardian; and, as we take t, the specific language in which he clothes uch guardian with full power and authority to pass "such title as he possessed therein at the time of his decease" is but the manifestation of a somewhat natural anxiety as to the obstacles that might present themselves to the alienation of the lands through a guardian before the devisee had attained her majority. As we read it, there is nothing in the language quoted, expressed or implied, regarding the lands outside of Nebraska, the appointment of a guardian for the minor devisee for certain purposes, the clothing of such guardian with certain powers, that argues against the supposition that the testator understood he had given Minnie Hawke a fee simple in the lands in controversy. The devising over clause, then, must be read as the testator wrote it; that is, the words, "not by her alienated and conveyed," must be taken to apply to all the premises described in the sixth item.

Coming now to a construction of the devising over clause, for the purpose of ascertaining whether the words "are operative to define the estate given," and to see whether "what without them might be a fee was intended to be a lesser right," as expressed in Sheets' Appeal, supra, it is plain that the testator's desire was that all the lands, including those in Nebraska, which Minnie had not alienated and conveyed, should, upon the happening of a certain contingency, go over; the contingency being Minnie's death without surviving issue. Minnie did die without issue. The question presented is whether this is a case in which subsequent provisions are invoked to take from an estate previously given qualities that the law regards as inseparable from it, namely, alienability, or whether such provisions do in fact import that the testator has intended by the preceding language to give a lesser estate than that language, standing alone, would give. We have already concluded that the primary devising clause, standing alone, gives to Minnie a fee simple in the Nebraska lands. As we read it, the devising over clause rather re-enforces than contradicts this construction, as it assumes in her the power of alienating those lands, and only attempts to give to the devisees over what she has not disposed of. It ought not to be contended that language in a subsequent provision which assumes that the first taker has the power of alienating the lands previously given to such devisee, her heirs and assigns forever, without other qualification, can be effective to cut down the estate of the first taker to a lesser fee. We think that before this can be done the language must be so clear as to leave no room for doubt.

We have, then, a case in which a testator has given to his daughter certain lands in fee simple, with a devise over to others of so much of the lands as his daughter has not disposed of. The rule is supported by a great weight of authority, both ancient and modern, that the devise over must [illegible] repugnancy. In Att'y General v. [illegible]

Digitized by Google

personal estate unto my son Francis Hall, and to the heirs of his body, to his and their use, to be paid unto him in three years after my death, and during that time I make Sir Isaac Newton, executor of this my will, and after the said three years expired, I do appoint that my son Francis shall be executor; and if my said son Francis Hall shall die, leaving no heirs of his body living, then I give and bequeath so much of my real and personal estate as my said son shall be possessed of at his death, to the Goldsmiths Company of London, in trust for several charitable uses mentioned in his will: But my will is, that the company shall not give my said son any disturbance during his life." The testator died, and after three years Francis Hall took upon himself the execution of the will, and some time after suffered a common recovery of the real estate, after which he made his will, appointing his wife executrix thereof, and died without issue. The Goldsmiths Company thereupon brought an action to have an accounting of so much of the estate as Francis Hall died possessed of. Quoting from the reporter's notes of that case: "The court was unanimous that the limitation over was void, as the absolute ownership had been given to F. H., for it is to him and to the heirs of his body, and the company are to have no more than he shall have left unspent; and therefore he had the power to dispose of the whole, which power was not expressly given to him, but it resulted from his interest. The words that give an estate tail in the land must transfer the entire property of the personal estate, and then nothing remains to be given over." In Jackson v. Bull, 10 Johns. 19, the testator devised certain lands to his son Moses, his heirs and assigns forever, and then declared: "In case my son Moses shall die without lawful issue, the said property he died possessed of, I will to my son Young," etc. It was held that the testator intended to give Moses an absolute control over the property, and the words "the property he died possessed of" were, as in the Hall Case, held to imply a power of disposition in Moses, repugnant to and destructive of the limitation over. In Ide v. Ide, 5 Mass. 499, the testator gave to his son Peleg, his heirs and assigns forever, certain lands, adding "that if my son Peleg shall die, and leave no lawful heirs what estate he shall leave to be equally divided between my son John Ide and my grandson Nathaniel Ide." The court there says: "Whenever, therefore, it is the clear intention of the testator that the devisee shall have an absolute property in the estate devised, a limitation over must be void, because it is inconsistent with the absolute property supposed in the first taker. * * * In the case at bar there is, first, an express fee simple devised to Peleg, in consequence But the limitation over is only of what estate he should leave at his death, which is descriptive only of the estate of which he should then be in possession. The implication is therefore necessary that the testator intended that Peleg might dispose of any or all of the estate devised, and leave nothing at his death. The absolute, unqualified interest in the estate devised was therefore given to Peleg, which is inconsistent with the limitation over to John and Nathaniel, and consequently the limitation under which demandant claims is void." The last two cases cited follow Attorney General v. Hall, supra, and it is urged by appellants that they misapprehend the holding in the Hall Case, but we think the three cases are in a direct line. The devises in the three cases are strikingly similar. In each the primary devise is in language, standing alone, which imports a fee simple, and the devise over is of what the first taker had not disposed of, implying that the first taker had the power of disposition. Other cases which announce the same rule are numerous, and need not be tabulated herein.

Finally, it is asked why, if the intent of Robert Hawke may be certainly ascertained, that the property devised to his daughter Minnie, not by her alienated and conveyed, should go upon her death without issue to certain persons named, such intent should not be enforced, no principle of public policy contravening? The common-law rule condemning for repugnancy the devise over is characterized as harsh and arbitrary, and we are asked not to commit the jurisprudence of this state to it. The answer is, we think, that, where a testator has once clearly expressed his intent to give to a devisee a fee simple, that devisee, his heirs apparent and assigns, are entitled so to regard it, and deal with the subject of the devise as a fee simple. The holder of an estate in fee simple may sell it and convert it into money, or by will demise it, or, taking thought, may say, "I will not make a will, as I desire my property to go to my heirs in the manner provided by law." There is no sound reason why, in the last-named event, the estate should not pass as he impliedly directs, or why, in the second event, it should not go as he expressly directs, but pass again under the dominion of the very instrument vesting in him the estate that empowers him to sell it and convert it into money, as in the first-named event, giving the money to his heirs. A testator is not, under the well-established rule, and, as we think, should not be, permitted to control the future devolution of property vested by his will in fee simple in his devisee.

In the view we have taken both of the question of fact and the law applicable, it becomes unnecessary to discuss certain other questions suggested; and, from what has

Digitized by Google

e lower court sustaining the demurrer is ght, and should be affirmed.

DUFFIE and POUND, CC., concur.

PER CURIAM. For the reasons stated in e foregoing opinion, the judgment of the strict court is affirmed.

CONSTERDINE v. MOORE et al.

Supreme Court of Nebraska. Oct. 7, 1903.)

MORTGAGE—TRANSFER—CONSTRUCTION—PURCHASER—NOTICE—PAYMENT.

1. A real estate mortgage given to secure a egotiable note is a mere incident to the debt, nd is transferred by a transfer of the note. Webb v. Hoselton, 4 Neb. 308, 19 Am. Rep. 38.

2. A note and mortgage executed and delivered together as one transaction will be construed together. Provisions in the mortgage affecting the indebtedness itself will be construed with the note. Association v. Moore, 59 N. W. 115, 40 Neb. 686.

3. When the note and mortgage and an assignment of the mortgage are sold and delivered together, the purchaser will be charged with notice of the contents of the papers.

4. The maker of nonnegotiable papers, who as no notice of a transfer thereof, may make ayment to the original payee.

(Syllabus by the Court.)

On rehearing. Former judgment vacated, nd judgment of district court reversed.

For former opinion, see 91 N. W. 399.

SEDGWICK, J. After the decision of Garnett v. Myers (Neb.) 94 N. W. 803, a rehearing was granted in this case, and in others involving the same questions. Upon this hearing the plaintiff's attorney has furnished us an able and exhaustive argument upon the questions involved, which has been of great assistance to us. Questions involving the negotiability of notes secured by mortgages and other collaterals have frequently been considered by this court. As early as 1876 it was determined in Webb v. Hoselton, 4 Neb. 308, 19 Am. Rep. 638, that "a bona fide purchaser, for value, of a negotiable promissory note secured by mortgage, before maturity and without notice, takes the mortgage, as he does the note, discharged of all equities which may exist between the original parties," and also that "the mortgage is a mere incident of the debt, and passes with it." These principles have since been adhered to, and so it was said in the first opinion of Garnett v. Myers, "The long-established and general rule is that, if the note is in form negotiable, a sale and transfer of the note transfers the mortgage." In Webb v. Hoselton the security was in the form of a deed of trust. Its sole object was to secure the payment of the note. It does not appear to have contained any provisions and the effect of such provisions when incorporated in the mortgage or deed securing the note was not considered.

2. That the note and mortgage, when executed and delivered together as one transaction, will be construed together, is not a new doctrine in this state. Association v. Moore, 40 Neb. 686, 59 N. W. 115, and Seieroe v. Bank, 50 Neb. 612, 70 N. W. 220, were cited as establishing the proposition as the doctrine of this court. In the former case there is a somewhat extensive discussion of the question, and the conclusion is that the provision in the mortgage that, "if the mortgagors should fail to pay the money when due, * * * the plaintiff might elect to pay the same, and declare the whole amount due and payable at once," gave the holder of the papers the right, upon such failure, "to elect to declare the whole debt due, not only for the purpose of foreclosing, but also for the purpose of enforcing the personal liability." The conclusion is fortified by the consideration and discussion of authorities from this and other courts, and is considered as settling the law of this state upon that question. In the course of the opinion it is said: "The writer was at first of the impression that where the note is absolute, and the mortgage contains such a provision, the provision should be restricted to the remedy by foreclosure, rendering the debt due for the purpose of foreclosure only, but leaving the maturity of the debt for the purpose of enforcing the personal liability to be determined by the note itself. The adjudications do not, however, bear out this view. In this state it has been determined that in deciding such questions the note and mortgage should be construed together. Fletcher v. Daugherty, 13 Neb. 224, 13 N. W. 207; Lantry v. French, 33 Neb. 524, 50 N. W. 679. This principle alone would not be decisive of the question, for the reason that, construing the two instruments together, the fact that the stipulation referred to was contained in the mortgage, and not in the note, might be taken as an evidence of the intention of the parties to restrict the effect of the stipulation to the enforcement of the mortgage. * * * First National Bank of Sturgis v. Peck, 8 Kan. 660, was a suit upon notes under similar conditions. The court there held, in an opinion by Brewer, J., that the notes and mortgage were to be construed together, that all the notes became due upon the failure to pay one, and that the statute of limitations ran against all from that time." It may be said that this opinion determines the law of this state to be that conditions inserted in the contemporaneous mortgage which clearly and necessarily relate to the indebtedness itself, and manifestly constitute an attempt to modify or enlarge the terms of the note, will be construed with the note, and parties chargeable with notice of such provisions will be bound thereby. This decision,

¶ 1. See Mortgages, vol. 35, Cent. Dig. §§ 620, 621.

Digitized by Google

criticised by this court, but, on the other hand, has been followed as authority; and it is not perceived that parties dealing with commercial paper have cause to complain of such a rule. The rule itself does not trench upon the sacredness of commercial paper under the law merchant. The parties who attempt to make a promissory note mean one thing to one person, and another thing to other persons; who want to hold the note out to the world to be that which they have expressly agreed it shall not be; who seek to set it afloat with a string attached, which may or may not be used to control the note, as their interest may thereafter demand—are responsible for the uncertainty that attaches to such securities. If doubtful, conflicting, and uncertain provisions in the contract result in rendering such papers nonnegotiable, the remedy is to limit the provisions of the mortgage to their proper functions of securing the indebtedness, and define the terms of the indebtedness in the note which is given for that purpose. See, also, Seleroe v. Bank, 50 Neb. 612, 70 N. W. 220; 1 Randolph on Commercial Paper, 198.

3. The note and mortgage, together with an assignment of the mortgage, were sold and delivered to the plaintiff. It is idle to argue that under such circumstances the plaintiff was not bound to take notice of the provisions of the papers which he purchased.

4. The provision of the mortgage which was held to affect the negotiability of the note is copied in full in the first opinion in Garnett v. Myers, 91 N. W. 400. The note and mortgage in this case were identical in their provisions with the papers involved in Garnett v. Myers. Upon this hearing it was strenuously contended, and is ably and exhaustively argued in the brief, that these provisions were not intended to, and did not, affect the indebtedness itself, but relate only to the security, and ought not, therefore, to render the note nonnegotiable. The question thus presented is not free from difficulty, but we are inclined to adhere to the construction placed upon these provisions upon the second hearing of Garnett v. Myers. After fully providing for the protection of the securities, other conditions are inserted, which seem to have no meaning unless they are construed to protect the holder of the securities against taxes that may be imposed upon these securities. If this is their meaning and intention, there can be no doubt that such conditions render the amount that the mortgagor may be compelled to pay upon the indebtedness, as a part thereof, uncertain, which would clearly render the papers nonnegotiable. The papers being nonnegotiable, payment to the original payee without notice to the payor of any transfer of the papers will discharge the paper.

The brief and argument of appellant are mostly employed in the consideration of questions. But these considerations are unimportant in view of the conclusion reached in the foregoing discussion, which requires a reversal of the judgment below.

The judgment heretofore rendered in this court is vacated, the judgment of the district court is reversed, and the cause remanded, with instructions to dismiss the case.

NORTHERN COUNTIES INV. TRUST, Limited, v. EDGER et al.

(Supreme Court of Nebraska. Oct. 7, 1903.)

On rehearing. Former judgment (91 N. W. 402) vacated, and decree of lower court affirmed.

SEDGWICK, J. A rehearing was allowed in this case in view of the conclusions reached in the recent hearing in Garnett v. Myers, 94 N. W. 803. The obligations sued upon are identical in their provisions with those involved in Garnett v. Myers and in Consterdine v. Moore (opinion filed herewith) 96 N. W. 1021.

For the reasons there given, the judgment heretofore rendered in this cause is vacated, and the decree of the lower court is affirmed.

KORBEL v. SKOCPOL.

(Supreme Court of Nebraska. Oct. 7, 1903.)

SALE—OFFER TO RESCIND—RECOVERY OF PRICE PAID—INSTRUCTIONS.

1. Evidence examined, and *held* sufficient to sustain the verdict.

2. To warrant the rescission of a sale on the ground of false representation, it must appear not only that the representations were false, but that the injured party believed them, and acted upon them to his injury.

3. Where the question covered by an instruction tendered by a party is resolved by the court in his favor as a matter of law, he cannot complain of a refusal to give such instruction.

4. Instruction examined, and *held* sanctioned by the former rulings of this court.

(Syllabus by the Court.)

Commissioners' Opinion. Department No. 2. Error to District Court, Saline County: Stubbs, Judge.

Action by Frank Korbel against Frank Skocpol. Judgment for defendant, and plaintiff brings error. Affirmed.

F. W. Bartos and J. A. Wild, for plaintiff in error. J. H. Grimm & Son, for defendant in error.

ALBERT, C. The plaintiff alleges, in substance, that at a public auction held by the defendant the latter offered for sale a certain mare, which he represented to be sound and but 8 years old; that plaintiff, relying upon said representations and believing them to be true, bought the mare at said sale, and paid the defendant therefor the sum of

Digitized by Google

hit at the time well knew; that, immediately upon learning of the falsity of the said representations, the plaintiff offered to return the mare to the defendant, and demanded of him a return of the price paid; that the defendant refused to accept a return of the mare, or to return the price paid for her. The prayer is for judgment against the defendant for the amount of the purchase price, with interest. The answer admits the sale, but denies all the other allegations. A trial resulted in a verdict and judgment for the defendant. The plaintiff brings error.

The principal contention of the plaintiff is that the verdict is not sustained by sufficient evidence. In an action of this character the plaintiff must allege and prove, among other things, that he believed the representations to be true, and acted upon them to his damage. Beach on Contracts, § 804; Stetson v. Riggs, 37 Neb. 797, 56 N. W. 628. While there is evidence in the record that might warrant a finding of the foregoing facts, it cannot be said that they are conclusively established. One of the witnesses testified that just before the mare was offered for sale he had a conversation with the plaintiff in which he told him that the mare was about 15 years old, and in which the plaintiff told the witness that he did not care about that, because he did not want to pay a high price for a horse. In the same conversation the plaintiff expressed the opinion that the mare was about 10 years old. This, if true—and, for the purposes of the contention under consideration, it must be taken as true—is amply sufficient to warrant a finding that the plaintiff did not rely on the representations of the defendant, because it shows that he did not buy the mare in the belief that she was about 8 years of age, but in the belief, based on his own judgment, that she was at least 10 years old. It is obvious that he cannot be said to have relied on the representation that the mare was only 8 years old, when he bought her in the belief that she was at least 10 years old. Having failed to establish conclusively one of the facts essential to a recovery, it follows that the contention that the verdict is not sustained by sufficient evidence must fail.

The plaintiff tendered the following instructions: "Misrepresentation may be either by word or acts, or the suppression of material facts with the intent to deceive. The important inquiry is whether the plaintiff was willfully deceived or misled by the defendant to his injury." "A person is justified in relying upon a representation made to him in all cases where the representation is a positive statement of fact, and where an investigation would be required to discover the truth." They were refused, and their refusal is now assigned as error. Whatever may be said of the instructions as abstract court on its own motion. The only representations relied upon were those made by the defendant and the auctioneer, which were not in the nature of a suppression of the truth, but were active and specific. In one of the instructions given, the jury were directed to find for the plaintiff if they found that the representations in question were made, that they were false, that they were relied upon by the plaintiff, and that the plaintiff, as soon as he learned that such representations were false, offered to return the mare. By this instruction, the court held, as a matter of law, that, if the representations were made as claimed, the plaintiff would be justified in relying upon them. His right to rely upon them is not called in question in any part of the entire charge. That being true, the plaintiff could not be prejudiced by the refusal of the instruction tendered.

Complaint is made of the following instruction given by the court: "If you shall find from the evidence that the defendant did not make the representation charged by the plaintiff, but that defendant's auctioneer, immediately before the sale of the mare in question, represented her to be eight or nine years old, and sound, you will disregard the statements made by the auctioneer, unless you find that such representations were made with the knowledge or by the direction of the defendant." An instruction to the same effect, and almost in the same words, is approved in Boice v. Palmer, 55 Neb. 392, 75 N. W. 849.

The foregoing disposes of all the assignments argued, and, as they seem to be without merit, we recommend that the judgment of the district court be affirmed.

BARNES and GLANVILLE, CC., concur.

PER CURIAM. For the reasons stated in the foregoing opinion, the judgment of the district court is affirmed.

GERMAN-AMERICAN SAV. BANK v. CRAIG et al.

(Supreme Court of Nebraska. Oct. 7, 1903.)

CONTRACT OF SALE—SUBSTITUTION OF PARTIES—BREACH OF WARRANTY.

1. C. S. & Co., in pursuance of a contract of sale with C. & A., consigned certain goods to the latter, drew a draft for the amount due, and negotiated it, with the bill of lading attached, to a bank, which delivered the goods and bill of lading, and collected the draft of C. & A. *Held*, that the transaction did not, of itself, operate to substitute the bank for C. S. & Co., as a party to the contract of sale, in such a way as to render it liable for breach of warranty as to the quality of the goods.

(Syllabus by the Court.)

Commissioners' Opinion. Department No. 2. Error to District Court, Phelps County; Adams, Judge.

Digitized by Google

against the German-American Savings Bank. Judgment for plaintiffs, and defendant brings error. Reversed.

James I. Rhea, for plaintiff in error. S. A. Dravo and Stewart & Munger, for defendants in error.

ALBERT, C. Conrad Shopp & Co., of St. Louis, Mo., entered into a contract with Craig & Alder, whom we shall hereafter call the plaintiffs, for the sale and delivery to the latter, at Holdrege, in this state, of certain produce, warranted to be fresh and mercantile. The goods were consigned to the plaintiffs; the vendors retaining the bill of lading, which they attached to a draft drawn on the plaintiffs for the agreed price of the goods, payable to the order of the German-American Bank of St. Louis, which discounted the draft, taking the bill of lading as security for its payment. The draft, with the bill of lading attached, was forwarded to a bank at Holdrege, where it was presented to the plaintiffs, and by them paid, and the bill of lading and the goods delivered to the plaintiffs. The goods did not conform to the warranty, and were practically worthless, and the plaintiffs brought this action against the St. Louis bank and the vendors for breach of warranty. The suit was aided by attachment, and a certain creditor of the bank garnished. No property of the other defendant was attached, and, as it made no appearance in the case, the court acquired no jurisdiction either over its person or property, and the case therefore proceeded against the bank alone, and we shall hereafter refer to it as the defendant. Judgment was given for plaintiffs, and the defendant brings error.

The decisive question in this case is whether by the transfer of the bill of lading the defendant succeeded to the liability of the vendors for a breach of warranty as to the quality of the goods. The plaintiffs' theory is that by the transfer of the bill of lading the defendant became the owner of the goods, and from that time stood in the same relation to the plaintiffs that the vendors themselves would have held, had the bill of lading not been transferred. After considerable research, we have been able to find but two cases involving the same question, namely, Landa v. Lattin, 19 Tex. Civ. App. 246, 46 S. W. 48; Finch v. Gregg, 126 N. C. 176, 35 S. E. 251, 49 L. R. A. 679. Both of these cases fully sustain the plaintiffs' theory. The first headnote to the Texas case fairly shows the point decided, and is as follows: "A consignor of wheat delivered to a bank a bill of lading, with draft drawn upon his consignee attached. The bank cashed the draft and paid the consignor. The consignor had contracted to furnish sound wheat, but the wheat furnished was of inferior quality. Held, that the bank, purchasing the and was responsible to the consignee for the failure to furnish sound wheat." The foregoing language amounts to this: That by the transfer of a bill of lading, and the subsequent delivery of the goods by the transferee to the vendee, the former becomes substituted for the vendor as a party to the contract of sale. We are unable to assent to that doctrine, because it seems to us to contravene some of the elementary principles of the law of contracts, to say nothing of the mercantile usages and customs upon which the law touching bills of lading rests. It is self-evident that the substitution of one party to a contract for another involves a new contract—a contract of substitution. That being true, the consent of all the parties to be bound by the contract of substitution is an essential element, for without it there could be no meeting of minds, no agreement, and consequently there could be no contract. That substitution could only be effected by the consent of all parties is especially true where, as in the present instance, the parties to the original contract have a right to rely on the personal responsibility of each other for its performance. Were it otherwise, a responsible vendor might escape liability for a breach of warranty by the substitution of an irresponsible party in his stead. Hence, if the defendant was substituted for the vendors in this instance, in such a way as to succeed to the rights and liabilities of the latter, it must have been with the consent, express or implied, of the plaintiffs. There is no hint that the plaintiffs expressly consented to the substitution. Neither is such consent to be implied from the mere transfer of the bill of lading. It may be claimed, however, that the consent of the plaintiffs to the substitution is to be implied from the acceptance by them of the goods and bill of lading from the defendant, and the payment of the draft. We do not think their consent is to be implied from any or all of those circumstances. Such implication might arise, had the plaintiffs had the right to reject the goods on the ground that they were not tendered by the vendors, but they had no such right. It is a common practice for the vendors of goods to attach the bill of lading to a draft, and transfer it to a third party, who, constructively, at least, delivers the goods. There can be no question that under such circumstances a tender of the goods by the transferee of the bill of lading is a sufficient tender by the vendor, and that the vendee would be liable for a breach of contract, should he refuse them on the sole ground that they were not tendered by the vendor himself. Such a tender would be held to be, in effect, a tender by the vendor, and a sufficient compliance with the contract. As the plaintiffs could not have rightfully refused to accept the goods because they were tendered by the defendant instead of by the vendors themselves, it is not to be implied

Digitized by Google

o the contract, because consent involves the lement of choice, and where there is no hoice there can be no consent. Moreover, ills of lading have been in common use from ime immemorial. They have their origin in nercantile usages and customs. The law, in espect to them should be interpreted in the ight of those usages and customs, as commonly understood by those conducting business in accordance with them, and in such a way as not to hamper trade and commerce innecessarily. The transfer of bills of lading, with drafts attached, is a common and convenient commercial device. Its benefits lo not extend to one party to the transaction exclusively, but to all parties. Such transactions would be seriously embarrassed, and the usefulness of such device seriously impaired, were it to become the rule that a party, by discounting a draft with a bill of lading attached, becomes substituted as the vendor of the property covered by the bill of lading, and is required to see, at his peril, that the goods fulfill the requirements of the contract of sale. Such rule is not generally recognized in the commercial world, and it appears to us to be not only unsound as a rule of law, but an unnecessary and vexatious restraint on trade. Bills of lading, when properly transferred, operate as a delivery of the property itself, investing the transferee with the constructive custody of the property, which serves all the purposes of an actual possession. U. P. R. Co. v. Johnson, 45 Neb. 57, 63 N. W. 144, 50 Am. St. Rep. 540. We think the transaction shown in this case is the same, in effect, as though the bank had discounted the draft, and, to secure its payment, had taken the goods for delivery to the plaintiffs. The property in the goods did not pass to the defendant absolutely, but the goods were delivered to it, constructively, for a specific purpose, namely, to be delivered to the plaintiffs. That being true, so far as the plaintiffs are concerned, the defendant was no more than a mere agency or means employed for the delivery of the goods, assuming no liability under the contract beyond such delivery. It was not substituted for the vendors as a party to the contract of sale, and is not, therefore, liable for the breach of warranty under such contract.

In our opinion, the judgment of the district court is erroneous, and we recommend that it be reversed, and the cause remanded for further proceedings according to law.

GLANVILLE, C., concurs.

PER CURIAM. For the reasons stated in the foregoing opinion, the judgment of the district court is reversed, and the cause remanded for further proceedings according to law.

(Supreme Court of North
1903.)

INDICTMENT—SETTING ASI
—TRIAL—ASSISTANCE TO
TORNEY—BURGLARY—INST

1. The statute (section 808 specifies the grounds upon w may be set aside on motio and these are exclusive of al

2. Where a duly licensed torney appeared with and attorney in the prosecution in the district court, with presiding judge of the distr sumed, in the absence of a s trary, that he was rightfull der an order of the court ma for one of the causes specifie because of an employment b missioners of the county, w consent of the state's attor was committed by the trial defendant's objection to th such attorney in the trial o him, it is not available to not made to appear upon the peal.

3. An indictment for burgla gree for breaking and enter with intent to steal, as defin Rev. Codes 1899, will sustai the minor and constituent section 7411, Id., of enteri with intent to steal.

4. A conviction for enteri with intent to steal will be the objection that the evidenc show a burglary, the verdict a quittal of burglary.

5. Upon a trial for burglar ing charged with breaking a way car in which property w tent to steal therein, under s Codes 1899, and in defense te that he entered the car to o liance upon statements made son who accompanied him and the coal that such person had coal from the car, accused wa the jury instructed, upon his statutory definition of larcen they might be informed that, should find he intended all th constitute larceny.

6. A defendant has a right his intent and to have an based on his own testimony.

7. On the trial of a party intent to steal, where the evi rial points in the case is confl to refuse an instruction for th ly presenting the law on the t contended for by him, having dence on which to rest.

(Syllabus by the Court.)

Appeal from District Court Cowan, Judge.

William B. Tough was co ing a railroad car with inte appeals. Reversed.

George A. Bangs, for ap Shuman, State's Atty., for th

COCHRANE, J. Defenda for the crime of burglary i gree, under section 7406, R

¶ 6. See Criminal Law, vol. 14,

Digitized by Google

indictment, setting forth as grounds therefor that (a) the grand jury which returned the indictment was not legally called, in that the district judge, in ordering the jury drawn, did not do so upon a finding that the same was necessary for the due enforcement of the laws of the state; (b) because at the time of the finding of the indictment another indictment against defendant, for the same offense, returned by the same grand jury, was outstanding and undisposed of. Error is assigned upon the order overruling this motion.

A grand jury can only be drawn and summoned in this state when directed by the district judge by an order in writing, signed by him, and filed with the clerk. That a judge deems the attendance of a grand jury necessary at a term of court is sufficiently evidenced by the order directing it to be called, without any recital of his finding. Subdivisions 2 and 3 of section 7989, Rev. Codes 1899, furnish a method of securing an order for the calling of a grand jury when the judge might not otherwise order one.

The second ground of defendant's motion to set aside the indictment proceeds upon the assumption that the grand jury exhausted its authority as to the burglary charge against defendant when the first indictment was returned into court, and that it could not return a second indictment until the first had been set aside by the court, either upon motion or on demurrer, and the case ordered resubmitted by the court. This objection to the indictment is not one of those specified in the statute which may be made by motion to set the indictment aside. Section 8082, Rev. Codes 1899, provides that an indictment must be set aside by the court in which the defendant is arraigned upon his motion: "(1) When it is not found, indorsed and presented or filed as prescribed by this Code. (2) When the names of the witnesses examined before the grand jury are not inserted at the end of the indictment or otherwise exhibited thereon. (3) When a person is permitted to be present during the session of the grand jury, while the charges embraced in the indictment are under consideration. (4) When the defendant had not been held to answer before the finding of the indictment, on any ground which would have been good ground for challenge, either to the panel or to any individual grand juror." The courts of several states where there are similar statutory provisions hold that the enumeration in the statute of the grounds upon which an indictment will be set aside excludes all others. State v. Security Bank, 2 S. D. 538, 51 N. W. 337; People v. Southwell, 46 Cal. 141; People v. Schmidt, 64 Cal. 260, 30 Pac. 814; State v. Whitney, 7 Or. 386; State v. Justus, 8 Pac. 337, 50 Am. Rep. 470; State v. Baughman (Iowa) 82 N. W. 452; People v. Petrea, 92 N. Y. 128. The motion was properly overruled.

McClory was permitted to participate in the trial of the case as assistant to the state's attorney, over defendant's objection. The reason assigned in his objection by counsel for appellant was "that the cause, if any existed, for the appointment of Mr. McClory as special prosecutor in this case, has passed over; that the duly elected, qualified and acting state's attorney of the county of Pierce is now able to take charge of his duties, and has been present in this courtroom, and assisted in the trial of the case up to this time." The statute (chapter 178, p. 234 Laws 1901) upon which counsel relies provides that the state's attorney, as public prosecutor, must attend the district court and conduct, on behalf of the state, all prosecutions for public offenses. It declares the intent of the act to make the Attorney General, his assistants, and the state's attorney the only public prosecutors in all cases, civil and criminal, wherein the state is a party, and that they only shall be authorized to perform the duties set forth in the act, except as in the act provided. When the state's attorney refuses or reglects to draw indictments and informations (or to perform other enumerated acts, of no materiality to the point under consideration), the judge of the district court may, by order entered on the minutes of the court, appoint a suitable attorney at law, who shall be thereupon vested with all the powers of the state's attorney for that action. The act also provides "that nothing therein shall prevent the county commissioners of any county, in cases of public importance, with the advice and consent of the state's attorney, employing such additional counsel as may be deemed advisable to assist the state's attorney." It does not appear how or in what manner Mr. McClory's services were secured. The language of counsel's objection would indicate that an order of court was made appointing Mr. McClory to take charge of the prosecution. It was presumptively made upon the statutory ground. If the order was made without legal authority, or if no order was in fact made, the error, if any, should be made affirmatively to appear. It will not be presumed. State v. Campbell, 7 N. D. 64, 72 N. W. 935; State v. Maloney, 7 N. D. 122, 72 N. W. 927; State v. Haynes, 7 N. D. 70, 72 N. W. 923. There is nothing to show that Mr. McClory was not employed by the county commissioners upon the advice and consent of the state's attorney.

The indictment was drawn under section 7406, subd. 2, Rev. Codes 1899, and charged the defendant with the crime of burglary in the third degree, committed by breaking and entering in the nighttime a railroad car, in which property was kept, with intent to steal therein. The jury were instructed that: "The indictment, in addition to charging burglary in the third degree, also charges, as lesser offense, the offense

coal. Stealing of coal is larceny. In the crime last referred to you will notice that the element of breaking into the car is omitted, so that, if the jury has a reasonable doubt of the defendant's breaking into the car in question, the jury may consider the lesser crime, and say by its verdict whether he entered the car with intent to steal coal." The jury returned a verdict in the following language: "We, the jury, find the defendant guilty of the crime of entering a railroad car with intent to commit larceny, as charged in the indictment." Appellant excepted to these instructions, and now challenges the verdict as illegal, and not responsive to the indictment. Section 7411, Rev. Codes 1899, upon which this verdict is based, declares: "Every person who, under circumstances not amounting to any burglary, enters any building or part of any building, booth, tent, warehouse, railroad car, vessel or other structure or erection with intent to commit any felony, larceny or malicious mischief, is guilty of a misdemeanor." Section 8244, Id., permits the jury to find the defendant guilty of any offense the commission of which is necessarily included in that with which he is charged in the indictment or information. The only element of burglary in the third degree defined in subdivision 2, § 7406, and charged in the indictment, which is wanting in the statutory misdemeanor of which defendant was found guilty, is the "breaking." Strike from the indictment the word "break" where it appears in the charging part of this accusation, and there remains a good charge of the misdemeanor defined in section 7411, Id. This is the test applied by the Court of Appeals of New York, from which the statutes under consideration were taken. People v. Meegan, 104 N. Y. 529, 11 N. E. 48. The charge of breaking and entering a railroad car with intent to steal of necessity includes the charge of entering the railroad car with intent to steal. State v. Maxwell, 42 Iowa, 213. The verdict returned operated as an acquittal of the burglary charged. State v. Johnson, 3 N. D. 151, 54 N. W. 547; State v. Maloney, 7 N. D. 126, 72 N. W. 927. But the indictment charges every element of the statutory misdemeanor without being duplicitous. State v. Climie (N. D.) 94 N. W. 574. It is sufficient to sustain the judgment, the same as though the indictment had in express terms charged the offense named in section 7411, Rev. Codes 1899, and nothing else. State v. Johnson, 3 N. D. 150, 54 N. W. 547; People v. English, 30 Cal. 218; Mulloy v. State (Neb.) 78 N. W. 525.

It is specified for error that the evidence is insufficient to sustain the verdict, in that there was no evidence of a burglarious intent on the part of defendant in entering the car. The verdict acquitted defendant of the steal.

Appellant assigns error upon the refusal of the court to give the following instruction, requested by him: "I charge you, gentlemen of the jury, that, in order to obtain at your hands a verdict of guilty, the state must establish by competent evidence to your satisfaction beyond a reasonable doubt every essential element of the crime of burglary. One of the essential elements of the crime of burglary, as charged in this indictment, is that, after breaking by force the car described in the indictment, under circumstances such as would constitute a burglarious breaking under the instructions already given you, the defendant entered into such car with intent to steal the coal therein contained. This intent to steal thus required to be established by the state to your satisfaction beyond a reasonable doubt on the part of the defendant at the time of breaking and entering the car must have been the intent on the part of the defendant to take, steal, and carry away the coal in said car contained, without the consent of the owner, and with the intent to deprive him thereof; such taking, stealing, and carrying away to be accomplished by fraud and stealth. If, therefore, the defendant's intent at the time of entering said car, or at the time of forcibly breaking the same, if you find he did so forcibly break the car under the instructions already given you, was not to steal the coal therein contained, but that such entry was made under the belief that he had a right to take the coal, or if you have a reasonable doubt that it was his intent to steal the coal, then your verdict must be not guilty." The substance of this request is not covered by the charge given. It was applicable to the facts as testified to by the defendant, and its refusal was error.

The defense was centered upon the proposition that the defendant did not intend to steal the coal taken from the Great Northern car; that he went with one Marcus Coons to get the coal upon the representation made to him by Coons that one Kilpatrick had a car partly loaded with coal in the yard, out of which he (Coons) thought it would be all right to take coal; that he did not know the car entered contained coal of the railway company; and that he would not have entered the car had he known the coal therein belonged to the railway company. True, the evidence does not disclose that Coons gave him any reason why he thought himself entitled to take Kilpatrick's coal, but defendant was asked, when on the stand, the following question: "Q. Mr. Tough, whose car of coal did you suppose the car to be at the time you went into it?" This question was objected to by the state's attorney as incompetent, irrelevant, immaterial, and no foundation laid for the

Digitized by Google

answer. He reserved an exception, and error is assigned upon the ruling. In view of the defense made, defendant was entitled to show that his motive was an innocent one in entering the car, and that he was under a mistake of fact in entering it. State v. Waltz, 52 Iowa, 227, 2 N. W. 1102; State v. Shores (W. Va.) 7 S. E. 413, 13 Am. St. Rep. 875, 885; Robinson v. State, 36 Am. Rep. 399; Abbott's Crim. Briefs (2d Ed.) 671. Bishop thus states the rule of law for the application of which defendant contends: "The wrongful intent being the essence of every crime, it necessarily follows that whenever one is misled without fault, or carelessness concerning facts, and, while so misled, acts as he would be justified in doing were they what he believes them to be, he is legally innocent, the same as he is innocent morally." 1 Bish. Crim. Law, § 303. The Supreme Court of Florida say: "That the law deals only with the intention, and that a man is not to be punished when he has no guilty intention and acts in good faith, and with an honest belief, although he may not have acted as a reasonable and prudent man in having such faith and belief." Charles v. State (Fla.) 18 South. 369. Whether or not defendant was careless or without fault in acting on Coons' suggestions, and the questions whether he in fact acted on what Coons told him, or whether Coons in fact told him what he claims, were questions for the jury to decide under proper instructions. The state, under the charge contained in the indictment, imposed on itself the duty of establishing every element of the offense therein set forth. Defendant was accused of breaking and entering the railway car described, in which property, to wit, coal, was kept, which coal was the property of the Great Northern Railway Company, with the intent in him, the said William B. Tough, to steal therein the said coal. The intention to steal coal was a substantive part of the offense to be proven, and the word "steal" has a legal signification. To steal is to commit larceny. Larceny is defined as "the taking of personal property, accomplished by fraud or stealth, and with intent to deprive another thereof." Section 7445, Rev. Codes 1899. Defendant was entitled to have this definition of the word "steal" given in charge to the jury, so that they could apply the evidence to the charge with a full understanding of its meaning, and say whether defendant, in entering the car and taking the coal, did intend by fraud and stealth to take the property of the Great Northern Railway Company, and deprive it thereof, or to take the coal of Kilpatrick, which Coons had license to take. In Walton v. State, 29 Tex. App. 163, 15 S. W. 646, the defendant was charged with burglary with intent to commit rape. The court there said: "The gist of

he was charged with
his conviction, the jury
ly informed as to wh
to constitute this subs
for without such know
possible for them to
that particular thing.
should be informed th
guilty of intending all
essential to constitute
in carrying out his in
Yohe, 87 Iowa, 33, 53
fendant was charged
tent to commit larcen
that it was the duty
define larceny to the
"That was both prope
jury could not have d
breaking and entering
with the intent to c
larceny, without know
to constitute that offe
nett v. State (Tex. Cr
Castenada v. State, 1
jury were instructed
glary, as charged in
committed if the defen
entered the railway
indictment in which t
the intent to steal suc
tent I charge you tha
used in the indictmen
tions, simply means
tent of the defendant
ing into the car is to b
ful consideration of th
facts and circumstanc
instruction did not c
impression that the
sarily involved an un
the will of the owner,
right on the part of
the Missouri court, "
lacked completeness,
faulty." State v. Mo
W. 182. The reques
have made good the
structions given by t
ant was entitled, when
define the elements o
was necessary for the
them fully stated with
Green (Mont.) 39 Pac.
40 Neb. 545, 59 N. W
157 Ill. 382, 41 N. E.
206. And he was als
request given because
theory of defense and
case. State v. Partlo
S. W. 14, 59 Am. Rep
104 Ill. 569.

For the error in ref
judgment of convictio
same is, reversed, and
All concur.

Digitized by Google

BLAKEMORE et al. v. ROBERTS.*

(Supreme Court of North Dakota. Oct. 14, 1903.)

ACTION BY ADMINISTRATOR—QUIETING TITLE —ADVERSE CLAIMS—COMPLAINT.

1. An executor or administrator is authorized, under the Revised Codes, to bring an action to quiet title to real estate belonging to a decedent, pending administration of the estate.

2. A complaint to determine adverse claims under chapter 5, p. 9, Laws 1901, setting forth several tax liens as the basis of plaintiff's interest in the real estate involved in the suit, does not state more than one cause of action.

3. In an action brought under chapter 5, p. 9, Laws 1901, and based on a tax lien, the complaint need not allege that such tax lien was based on a regular assessment and levy of taxes.

4. The fact that a complaint, under said chapter 5, states facts additional to those necessary, does not render the complaint demurrable, if it appears that all the matters required thereby are stated, and that no other or different cause of action is stated.

5. A complaint to determine adverse claims under chapter 5, p. 9, Laws 1901, considered, and *held* not demurrable.

(Syllabus by the Court.)

Appeal from District Court, Cass County; Charles A. Pollock, Judge.

Action by Robert B. Blakemore and others against Matilda M. Roberts. Judgment for plaintiffs, and defendant appeals. Affirmed.

J. E. Robinson, for appellant. Newman, Spalding & Stambaugh, for respondents.

MORGAN, J. The complaint in this case states the following facts, after proper allegations as to the death of Louis A. Kedney and the appointment of the plaintiffs as the executors of his last will, viz.: (1) That in his lifetime, and in the year 1891, said Kedney purchased the following described premises, to wit: * * * at the sale for delinquent taxes of the years 1889 and 1890, and that a certificate of such purchase and sale was thereupon made and delivered to him by the auditor of Cass county; (2) that said Kedney purchased said lots in the years 1893 and 1894 at the sale for delinquent taxes held for those years, and that said auditor made and delivered to him certificates of such purchases; (3) that no tax deeds have been issued upon either of said certificates, and that plaintiffs are the owners and holders of such certificates of sale; (4) that plaintiffs have a lien or incumbrance upon said premises by reason of said certificates of tax sale; (5) that the defendant claims certain estates in and liens upon said premises adverse to the plaintiffs. The relief prayed for is that defendant be required to set forth her adverse claims, and that the same be adjudged void; (2) that title be quieted as to such claims, and the defendant barred and enjoined from further asserting them; (3) disbursements.

The defendant demurred to the complaint on the grounds: (1) That plaintiffs have not legal capacity to sue; (2) that several causes of action have been improperly united; (3) that the complaint does not state facts sufficient to constitute a cause of action. The trial court overruled the demurrer, and defendant appeals from the order overruling the demurrer.

The objection to the complaint principally relied on by the appellant is that no facts are alleged showing that the lien on which the action is based is a valid one, and based on valid and regular tax proceedings as to assessment and levy. The statute under which the complaint is framed is chapter 5, p. 9, Laws 1901. That law prescribes a form that may be used in actions to determine adverse claims, and this complaint contains every allegation required by that law to be stated in such an action, and is in fact a full and almost literal compliance with that law so far as the allegations are prescribed by the same. The statute having prescribed a form of complaint in an action to determine adverse claims, and plaintiffs having a complaint fully meeting the requirements of that statute, we hold it not subject to demurrer. It is well settled that the Legislature has the power to prescribe forms of complaints, and, having done so, such complaints will be held good if the statutory requirements are complied with, although such prescribed form may not comply with common-law rules of pleading.

It is urged that the complaint is not framed under chapter 5, p. 9, Laws 1901, for the reason that it alleges that the lien relied on is a tax lien. The contention is that plaintiffs have set forth more facts than are required by that law, and are therefore not within its provisions. We see no force in the contention. The fact that the complaint alleges that the lien relied on is held "by reason of each of said certificates of tax sale" is not sufficient to warrant us in holding that a cause of action to determine adverse claims is not pleaded, in view of all the other allegations of the complaint. These additional words do not make the complaint other or different than a complaint under chapter 5, Id. The allegations show a cause of action based on a lien. Wilson v. Hooser, 72 Wis. 420, 39 N. W. 772. If the complaint showed on its face that the lien pleaded is an invalid one, the rule would be different. The fact that more facts are pleaded than necessary under the statute does not render the complaint demurrable if the required facts are stated and no other or different cause of action is stated. We find no warrant for holding that the plaintiffs have waived the statutory form of complaint or elected to plead another. The defendant relies on the case of Swenson v. Greenland, 4 N. D. 532, 62

*Rehearing denied November 3, 1903.

¶ 1. See Executors and Administrators, vol. 22, Cent. Dig. § 536; Quieting Title, vol. 41, Cent. Dig. § 42.

Digitized by Google

N. W. 665. That case is not applicable to this one. This complaint is authorized and its form prescribed by statute. It is therefore excepted from the principles applied in that case to an action for the foreclosure of a tax lien. The case of Walton v. Perkins, 28 Minn. 413, 10 N. W. 424, is also claimed to be in point. But we do not so understand it. In that case the complaint was defective as a complaint in an equitable action to cancel a mortgage which was a cloud upon the title to land. The court refused to sustain the complaint as sufficient under the statute which provided for settlement of adverse claims. The case of Bell v. Dangerfield, 26 Minn. 307, 3 N. W. 698, is also relied on to support appellant's contention on this point. That was a case in which the general rules of pleading applied. In this case the statute provides what the complaint shall state. The case is not therefore in point.

The next objection urged against the complaint is that several causes of action are therein improperly united. The contention is that a cause of action is stated as to the lien derived from the sale during each of the years mentioned in the complaint. The liens mentioned in the complaint do not constitute the cause of action. The cause of action is that defendant claims an interest in the lots adverse to plaintiffs' interest therein as represented by the several tax liens. The relief sought is that the defendant be required to set forth those adverse claims, and that they be declared invalid by the court, and that plaintiffs have possession of the lots. No different relief is sought or can be granted than would follow if one lien only had been pleaded. The facts stated in the complaint do not state more than one cause of action.

The last objection urged to the complaint is that the plaintiffs have not legal capacity to sue, that the action pertains to real property, and that executors have no authority to bring such actions, but that such actions can be brought only by the heirs. The powers and duties of executors and administrators are prescribed by statute, and, unless such actions are authorized to be brought and maintained by executors or administrators, the demurrer must be well taken. Section 6372, Rev. Codes 1899, provides as follows: "The executor or administrator is entitled to possession of all the real and personal property of the decedent except the homestead and other exempt property reserved by law to the surviving husband or wife or children; and must protect the real property from waste or other injury and collect the rents and profits thereof until ordered to surrender the same, and collect the goods, chattels and other effects of the decedent and the debts and demands of every description due to the decedent or accruing to the estate in his right, and safely keep and dispose of the same according to law." Under section 6380, Id., the executor or administrator is required to make and return to the county court a true inventory and appraisement of all the real and personal property of the decedent. Section 6460 provides as follows: "The heirs or devisees may themselves or jointly with the executor or administrator maintain an action for the possession of the real estate or for the purpose of quieting title to the same against any one except the executor or administrator. For the purpose of bringing suits to quiet title or for partition of such estate the possession of the executor or administrator is the possession of the heirs or devisees. Such possession by the heirs or devisees is subject, however, to the possession of the executor or administrator for the purposes of administration as provided in this Code." Section 6461 provides that: "Except as otherwise prescribed in the next section, actions for the recovery of any property real or personal, or for the possession thereof and all actions founded upon contracts may be maintained by and against executors and administrators in all cases and in the same courts in which the same might have been maintained by or against their respective testators or intestates." Under the foregoing provisions of the Code the executor is entitled to the possession of all the real and personal property of the testator that the decedent would have been entitled to if alive. These representatives may bring and maintain any action for the recovery of the possession of any real property the possession of which might have been obtained by the decedent in his lifetime. The entire assets of the estate, except those mentioned in section 6372, supra, pass into the possession of the executor or administrator, to be held for the use of the estate, and finally to be distributed to the heirs or devisees under the order of the county court. These sections of the Code changed entirely the common-law rule governing the possession and control of real property pending administration. Under the common law the heir or devisee had sole control of the real estate, as the same was not subject to the payment of debts or the expenses of administration under any circumstances. Meeks v. Hahn, 20 Cal. 620. The statute of California prescribing the powers and duties of executors and administrators is practically the same as that of our own state, mentioned above. The Supreme Court of California has frequently construed these sections and defined the powers and duties of administrators and executors respecting real property of deceased persons pending the administration of the estate. In Beckett v. Selover, 7 Cal. 233, 68 Am. Dec. 237, the court said "that both real and personal estate of an intestate vest in the heir, subject to the lien of the administrator for the payment of debts and the expense of administration, and with the right in the administrator of present possession." In Meeks v. Hahn, supra, it was said that: "By the express terms of the statute for the

Digitized by Google

sion of the real and personal property of the intestate, and to receive the rents and profits of the real property until the estate is settled or delivered over to the heirs by order of the probate court. He is, besides, required to take possession of all the estate, real and personal, and is authorized to maintain actions for such possession in all cases where his intestate might have maintained such actions. And though by the statute concerning descents and distributions it is also provided that the estate of an intestate shall descend to the heirs, subject to the payment of his debts, yet this provision must be read in connection with the clauses of the other statute to which we have referred, which place the right of present possession in the administrator." Have the plaintiffs the right to maintain this action as an action to quiet title by the determination of adverse claims? Chapter 5, p. 9, Laws 1901, provides that: "An action may be maintained by any person having an estate or an interest in or lien or incumbrance upon real property whether in or out of possession thereof, and whether said property is vacant or unoccupied against any person claiming an estate or interest in or lien or incumbrance upon the same for the purpose of determining such adverse estate, interest, lien or incumbrance." The plaintiffs' testator had a lien upon the property described in the complaint by virtue of having purchased at a tax sale of said premises, and by virtue of having received a certificate of sale at such sale, and which said certificate was in his possession and held by him three years prior to his death. This lien passed to the executors upon the testator's death, and his executors became vested with all rights of action by virtue of such certificate which were possessed by Louis A. Kedney prior to his death. Section 6461, supra. Chapter 5 of the Laws of 1901, supra, gives any person having a lien upon property a right to maintain an action to determine adverse claims against the same. If Louis A. Kedney were alive, this action could be maintained by him. Under the statute this right of action goes to the executors; the lien given by virtue of the certificate of sale is the foundation of the action to determine adverse claims and quiet title as against them. It is true, such a lien would not support an action to determine adverse claims under statutory provisions existing before the statute of 1901. But this statute specifically gives the right to base such an action upon the lien or incumbrance. The right of an executor or administrator to maintain such an action has been held in California under similar statutes. In Pennie v. Hildreth, 81 Cal. 127, 22 Pac. 398, it was said: "We are not inclined to give it [the statute] this broad construction, but it is clearly not necessary that he [the administrator] have title to the property. If he has the right to the possession of the real and personal property of the intestate, and to receive the rents and profits of the real property until the estate is settled or delivered over to the heirs by order of the probate court. He is, besides, required to take possession of all the estate, real and personal, and is authorized to maintain actions for such possession in all cases where his intestate might have maintained such actions. And though by the statute concerning descents and distributions it is also provided that the estate of an intestate shall descend to the heirs, subject to the payment of his debts, yet this provision must be read in connection with the clauses of the other statute to which we have referred, which place the right of present possession in the administrator." Have the plaintiffs the right to maintain this action as an action to quiet title by the determination of adverse claims? Chapter 5, p. 9, Laws 1901, provides that: "An action may be maintained by any person having an estate or an interest in or lien or incumbrance upon real property whether in or out of possession thereof, and whether said property is vacant or unoccupied against any person claiming an estate or interest in or lien or incumbrance upon the same for the purpose of determining such adverse estate, interest, lien or incumbrance." The plaintiffs' testator had a lien upon the property described in the complaint by virtue of having purchased at a tax sale of said premises, and by virtue of having received a certificate of sale at such sale, and which said certificate was in his possession and held by him three years prior to his death. This lien passed to the executors upon the testator's death, and his executors became vested with all rights of action by virtue of such certificate which were possessed by Louis A. Kedney prior to his death. Section 6461, supra. Chapter 5 of the Laws of 1901, supra, gives any person having a lien upon property a right to maintain an action to determine adverse claims against the same. If Louis A. Kedney were alive, this action could be maintained by him. Under the statute this right of action goes to the executors; the lien given by virtue of the certificate of sale is the foundation of the action to determine adverse claims and quiet title as against them. It is true, such a lien would not support an action to determine adverse claims under statutory provisions existing before the statute of 1901. But this statute specifically gives the right to base such an action upon the lien or incumbrance. The right of an executor or administrator to maintain such an action has been held in California under similar statutes. In Pennie v. Hildreth, 81 Cal. 127, 22 Pac. 398, it was said: "We are not inclined to give it [the statute] this broad construction, but it is clearly not necessary that he [the administrator] have title to the property. If he has the right to the possession, and to receive the rents and profits of the real property until the estate is settled or delivered over to the heirs by order of the probate court. He is, besides, required to take possession of all the estate, real and personal, and is authorized to maintain actions for such possession in all cases where his intestate might have maintained such actions. And though by the statute concerning descents and distributions it is also provided that the estate of an intestate shall descend to the heirs, subject to the payment of his debts, yet this provision must be read in connection with the clauses of the other statute to which we have referred, which place the right of present possession in the administrator." Have the plaintiffs the right to maintain this action as an action to quiet title by the determination of adverse claims? Chapter 5, p. 9, Laws 1901, provides that: "An action may be maintained by any person having an estate or an interest in or lien or incumbrance upon real property whether in or out of possession thereof, and whether said property is vacant or unoccupied against any person claiming an estate or interest in or lien or incumbrance upon the same for the purpose of determining such adverse estate, interest, lien or incumbrance." The plaintiffs' testator had a lien upon the property described in the complaint by virtue of having purchased at a tax sale of said premises, and by virtue of having received a certificate of sale at such sale, and which said certificate was in his possession and held by him three years prior to his death. This lien passed to the executors upon the testator's death, and his executors became vested with all rights of action by virtue of such certificate which were possessed by Louis A. Kedney prior to his death. Section 6461, supra. Chapter 5 of the Laws of 1901, supra, gives any person having a lien upon property a right to maintain an action to determine adverse claims against the same. If Louis A. Kedney were alive, this action could be maintained by him. Under the statute this right of action goes to the executors; the lien given by virtue of the certificate of sale is the foundation of the action to determine adverse claims and quiet title as against them. It is true, such a lien would not support an action to determine adverse claims under statutory provisions existing before the statute of 1901. But this statute specifically gives the right to base such an action upon the lien or incumbrance. The right of an executor or administrator to maintain such an action has been held in California under similar statutes. In Pennie v. Hildreth, 81 Cal. 127, 22 Pac. 398, it was said: "We are not inclined to give it [the statute] this broad construction, but it is clearly not necessary that he [the administrator] have title to the property. If he has the right to the posses-

tain an action. The language of the Code is broad enough to cover every interest or estate in lands of which the law takes cognizance. Pierce v. Felter, 53 Cal. 18; Stoddart v. Burge, Id. 398; Smith v. Brannan, 13 Cal. 107; Liebrand v. Otto, 56 Cal. 247. An administrator has an interest in the decedent's real estate within the meaning of this statute, and if another is asserting a claim adversely to such interest he may maintain an action." See, also, Curtis v. Sutter, 15 Cal. 259.

Counsel relies on section 6460, supra, as sustaining his contention that plaintiffs cannot maintain this action. The heirs may maintain such an action, but not as against the possession of the administrator or executor. The possession of the real estate goes to the administrator or executor, pending administration, and the heirs cannot disturb such possession of the personal representatives, nor maintain an action to secure such possession as against them. The administrator or executor may maintain an action for the possession of real estate as against the heirs or devisees, pending administration. Under said section the heirs may themselves recover possession of real estate against third persons, but not against the personal representatives. Page v. Tucker, 54 Cal. 121. Statutes relating to the powers of administrators and executors, similar to ours, have been construed in the states of Washington and Montana. It is there held that administrators and executors may maintain actions to quiet title and for possession of decedent's lands while administration of the estate is pending, and that such actions are not maintainable by the heirs as against administrators or executors. Hazelton v. Bogardus, 8 Wash. 102, 35 Pac. 602; In re Higgins' Estate, 15 Mont. 474, 39 Pac. 506, 28 L. R. A. 116; Black v. Story, 7 Mont. 238, 14 Pac. 703.

The order appealed from is affirmed, and leave granted defendant to answer, within 10 days from the filing of the remittitur, on the terms named in the order of the district court overruling the demurrer.

SMITH v. SCHUYLER NAT. BANK et al.

(Supreme Court of Nebraska. Oct. 7, 1903.)

ACCOUNTING BY TRUSTEE.

1. Evidence examined, and *held* sufficient to sustain the findings of the trial court.

Commissioners' Opinion. Department No. 1. Appeal from District Court, Douglas County; Keysor, Judge.

"Not to be officially reported."

Suit by Robert Smith against the Schuyler National Bank and others. Decree for plaintiff. Defendants appeal. Affirmed.

James Gadsden, H. D. Waldo, and Rich & Clapp, for appellants. Baldrige & De Bord and C. J. Phelps, for appellee.

Digitized by Google

accounting brought by Robert Smith, appellee, against the appellants Schuyler National Bank and J. Sherbourne Johnson, its cashier, in the district court of Douglas county. It is disclosed by the record that immediately prior to May 28, 1892, one Abraham Code and Ernest Mitchell Innes were engaged in the general mercantile business in the city of Schuyler, under the name of Code & Innes; that the firm was insolvent, and immediately preceding the date mentioned made an assignment of all its property, consisting of a stock of merchandise variously estimated at from $11,000 to $16,000 in value, some other personal property, and the real estate where their business was situated. About this time Innes withdrew from the firm, and Code made an arrangement with his mercantile creditors by which they agreed to accept 65 cents on the dollar as payment in full of their indebtedness, and in order to consummate this settlement Code applied to the bank for a loan. The firm of Code & Innes was largely indebted to the bank at that time, and the bank, in order to secure its indebtedness, desired to make Code the loan he required, but on account of the national banking laws was unable to give him the amount he wanted. It was finally agreed that, if Code could induce some of his friends to advance a part of the money, the bank would advance the remainder; that all the property of the firm of Code & Innes should be conveyed to appellant Johnson under the designation of mortgagee in trust for the payment of the items following in their order: (1) All proper charges for conducting the business and disposing of the same. (2) To pay the two prior existing claims as follows: The Schuyler National Bank, $2,460; to William H. Sumner, president of the bank, $1,000. (3) To Schuyler National Bank, for money to be advanced to pay creditors, $5,729.81. (4) To Commercial National Bank, for money advanced by it to assist Code in making the settlement, $1,000. (5) To William H. Gadson, for services performed by him in procuring the Commercial National Bank loan, $160. (6) To one Fogg, for money advanced by him, $350.

There not being sufficient money to effect the settlement on the lines proposed, appellee, Smith, was induced to turn over to the bank for the use of Code four promissory notes owned by him, of $420 each, dated March 1, 1892, drawing interest at the rate of 6 per cent., secured by real estate mortgage. One of these notes was taken by appellant bank, and the other three by a saving bank which seems to have been run in connection with the Schuyler National Bank, appellant. The money realized from these notes was turned into the fund in the hands of appellant Johnson to be used in settlement with the mercantile creditors. In order to secure appellee Smith for what he was advancing on the notes, Code executed to him head of appellant bank, and is in the language following: "May 28, 1892. For value received I hereby sell, assign and transfer to Robert Smith all my right, title and interest in and to the stock of goods and book accounts heretofore belonging to the firm of Code & Innes. This is subject to a lien on said goods and book accounts in favor of Schuyler National Bank for $7,350. and Smith not to have possession until said lien is discharged. [Signed] Abraham Code."

Appellant Johnson was to, and did, conduct the business in his name as mortgagee for more than a year thereafter, selling out and replenishing the stock, and finally sold the remnant of the stock, and accepted in payment therefor certain real estate in the city of Omaha, the title to which he took in his own name. This suit is brought to recover the proceeds of the note above described which appellee contributed to the fund. This the trial court found to be $1,552, and, among others, the court made a finding as follows:

"3d. The court finds that on said May 28, 1892, the said Code and defendant Johnson agreed that Johnson should have the sum of $1,000 for his services in assisting in securing loans to Code for the payment of creditors of Code & Innes, and for looking after the sale of the stock of goods for said Code, and distributing the proceeds thereof in accordance with the trust arrangement. The court further finds that it would be inequitable and unfair to the plaintiff to permit the said defendants or either of them to take pay for said services before plaintiff was paid the amount of his interest in said stock of goods or the proceeds therefrom."

"7th finding. Par. 2. The said Johnson, from the proceeds of said trust assets, paid the sum of $500 to the Schuyler National Bank for certain capital stock in the Farmers' Exchange, which was a corporation doing a mercantile business in the city of Schuyler at said time. The court finds that the said capital stock was at that time not worth in excess of $187, and that the said Johnson had no right or authority to pay from the proceeds of said trust assets any further sum than $187, and that the said defendants should be charged with the difference between said items, or $313."

It is contended that the findings quoted are not sustained by the evidence, and this is the only question presented for determination. The books of the appellant bank show a deposit made up of the items following:

Due the bank	$4,729 81
Gadson	1,000 00
Fogg	325 00
Smith	1,552 00
Making a total of	$7,606 81

—This being the exact amount paid to the assignee for the goods which he had received from Code & Innes. Out of the moneys so shown to be on deposit, appellant Johnson

$1,000 still due the bank of the indebt-
ss which it claimed at that time was
e satisfied out of the trust property.
claimed by appellants that there remain-
npaid, of the sums which were to be
before the claim of appellee, Smith, $1,-
7, and therefore, even if there was a
ppropriation of the trust funds of the
) and the $313 mentioned in the find-
quoted, there would still be nothing com-
appellee, Smith. The amount it was
ed was due the bank from the firm of
& Innes at the time of the failure was
), and this was included in the amount
vas to be paid out of the property com-
to the hands of appellant Johnson be-
nything was to be paid to Smith. This
item was secured by a collateral note
2,500, which in turn was secured by
rtgage upon the lot and business of
& Innes. This property was deeded to
int Johnson by the assignee at the
f the consummation of the settlement,
hnson testified that it was worth the
$4,000, and that he afterwards deed-
to William H. Sumner, the president
bank. The $2,500 mortgage on this
y was subsequently released. It is
l this release was made by mistake,
e testimony regarding this question
lly unsatisfactory, and was doubtless
rded by the trial court. The testi-
liscloses that this lot, containing the
ilding, was deeded to Sumner, presi-
the bank, and there can be no doubt
e $2,640 due the bank in the first
, as well as the additional $1,000
t is claimed that Code & Innes owed
ier individually, have been fully paid.
imony shows that appellant Johnson
Alberta, Canada, and made a final
nt with Code, and paid him $125,
le, upon investigation, afterwards
much more was due him. Appel-
hnson and the bank seem to have
ited the trust funds very much to
n advantage, and wholly without
rd to the rights of appellee, Smith.
sputed testimony shows that, of all
y raised and put in the bank for
se of settling with the mercantile
and obtaining possession of the
hnson appropriated $1,000 before
nything in discharge of the trust.
disclosed that he applied $500 of
coming into his hands in payment
nk of the face value of the stock
the mercantile company, upon
re was only realized the sum of
loss of $313 to the trust fund.
items were charged against ap-
y the trial court, and judgment
ccordingly. This judgment, from
xamination of the record, seems to
ly just, and the findings are fully
by the evidence. It is therefore

DUFFIE and POUND, CC., concur.

PER CURIAM. The conclusions reached by the Commissioners are approved, and, it appearing that the adoption of the recommendations made will result in a right decision of the cause, it is ordered that the judgment of the district court be affirmed.

PENNEY et al. v. BRYANT et al.

(Supreme Court of Nebraska. Oct. 7, 1903.)

CORPORATIONS—LIABILITY OF OFFICERS—JOINT LIABILITY—VENUE.

1. An officer or agent of a corporation is not liable personally to third persons for mere failure to perform some duty which the corporation may have owed them.

2. Where a joint liability is asserted against several defendants in order to maintain an action against one or more of them in a county other than that wherein they reside or are found, the latter are not to be held upon a different and several liability, even though it is disclosed by the pleadings and proofs.

(Syllabus by the Court.)

Commissioners' Opinion. Department No. 3. Error to District Court, Douglas County; Slabaugh, Judge.

Action by Henry R. Penney and others against Thomas Bryant and others. Judgment for defendants, and plaintiffs bring error. Affirmed.

Montgomery & Hall, for plaintiffs in error. Bartlett, Dundey & Martin, for defendants in error.

POUND, C. As stated by counsel, this action "was brought by the plaintiffs for the recovery of damages, in the alleged sum of $1,000, of and from the defendants, upon the ground that the defendants had wrongfully and unlawfully caused the First National Bank of Schuyler, Nebraska, to divert and misappropriate, and prevented it from paying to the plaintiffs, the sum of $668.95, which the plaintiffs, in their firm name of H. R. Penney & Co., had on deposit in said bank on and after July 21, 1900, subject to check or draft, and justly payable on demand, and due from the said bank to the plaintiffs." It appears that, prior to the time the controversy arose, plaintiffs were conducting a so-called brokerage business in the city of Omaha, and had as correspondent at Schuyler one Brown, doing business under the name of Black & Co. Brown testified, to use his own words, that he was "running a bucket shop in Schuyler, transacting business with H. R. Penney & Co." When asked his meaning, he stated that he was "dealing in the grain market, or supposedly in the grain market," and that he did not know whether he was buying grain or not, and could not state just what the transactions in which he was engaged were. As money

Digitized by Google

was paid to Black & Co. from time to time in the course of the business, Brown deposited it in the defendant bank, and at once advised plaintiffs of the deposit. One Louis T. Bryant, son of the defendant Thomas Bryant, was dealing with Black & Co. During the two months prior to July 1, 1900, he paid to them, on certain pretended purchases of grain, sums of money aggregating $490, which were deposited in the defendant bank to the credit of the plaintiffs. On July 21, 1900, the plaintiffs drew upon the bank for the sum of $600. Payment of this draft was refused, and the cashier, one of the defendants herein, notified the plaintiffs that the sum of $522.50 out of the balance of $668.85 to the credit of the plaintiffs in the bank was claimed by the said Louis T. Bryant. Thereupon the plaintiffs wrote to the bank, demanding payment of the money, and were informed by the cashier that the bank had been garnished. On behalf of the defendants, the evidence tends to show that prior to the time when the draft was presented the said Louis T. Bryant had notified the bank of his claim to the money, and that on July 25th, and prior to the letter last referred to, said Louis T. Bryant had brought an action in the district court of Colfax county against plaintiffs in their partnership name, and had garnished the bank. The present action was brought in Douglas county against the president and cashier and the bank; the bank apparently being served in Colfax county, and brought in on the ground that a joint liability was asserted against all of the three defendants. The trial court found generally for the defendants, and dismissed the action.

It is beyond controversy that the money was received by Black & Co. as margins put up in a bucket-shop transaction, and that neither Black & Co. nor plaintiffs gave any other or further consideration therefor whatever. Hence we think plaintiffs could be held by Louis T. Bryant as constructive trustees so long as the money, or some part of it, remained in their hands. The course of dealing between the parties was nothing more or less than gambling upon the price of grain, and, in effect, the plaintiffs had so much money of said Louis T. Bryant in their possession, which they held without consideration, and to which he was entitled. But in case a person chargeable as constructive trustee deposits the money in a bank, the bank, on receiving notice of the claims of the owner, becomes a trustee also, and may be held as such. Hence, if the moneys in the bank on July 21, 1900, represented or contained, in whole or in part, the moneys paid to Black & Co. by said Louis T. Bryant, the latter, after notifying the bank of the facts, was entitled to insist that they be held, and not paid out to the plaintiffs, and to charge the bank if it disbursed them notwithstanding. There is evidence that checks were drawn from time to time against the deposit, but it is not shown that it fell below the sum claimed at any time from the date when Black & Co. received the money to the date of the draft. This evidence is not sufficient to prove that the balance remaining on July 21, 1900, did not contain or represent the trust fund. City of Lincoln v. Morrison (Neb.) 90 N. W. 905, 57 L. R. A. 885. Consequently we are inclined to the opinion that, when the bank was notified that moneys on deposit were claimed by a third person as held in trust for him by the depositor, it might properly refuse for a reasonable time to pay out such moneys until the ownership was settled by interpleader or other appropriate proceeding, or the facts fully ascertained. When, however, the said Louis T. Bryant brought an action against the plaintiffs for money had and received, and garnished the defendant bank, he abandoned his claim upon the specific fund, and recognized plaintiffs as the owners thereof. Hence, if it were a mere question of whether the bank is or is not indebted to plaintiffs in the amount of the deposit, it would be necessary for us to inquire into the validity of the garnishment proceedings. But in the present action we do not think that matter involved in any way. An officer or agent of a corporation is not liable personally to third persons for mere failure to perform some duty which the corporation may have owed them. The rule in this respect is well stated by a learned text-writer: "Where the wrong done consists of mere nonfeasance—of the mere failure to perform some duty which the corporation, his principal, owes to the plaintiff— * * * then the corporation only is liable. But where it consists of misfeasance— * * * an affirmative act wrongfully ordered or done against the plaintiff— * * * then he cannot escape liability by setting up that it was the act of the corporation; for, although the corporation may be liable, he may be liable also—he, as a personal trespasser; it, on the principle of respondeat superior. It is, in the eye of the law, like other cases of joint trespass." 4 Thompson, Corporations, § 4069. The president and cashier of the bank in this case did nothing more than refuse to pay out the money upon plaintiffs' draft and the subsequent demand by letter. There was no conversion or misappropriation of the fund. It was simply held to await the result of the garnishment proceedings. All that can be charged is that, the bank being under a duty of paying the money to plaintiffs, its officers did not perform that duty. In other words, plaintiffs' case is one of nonfeasance, so far as the president and cashier of the bank are concerned, not of misfeasance or active trespass or wrongdoing. It follows that the defendants Bryan and Rathsack are not liable in this action, and, this being so, we do not think the bank may be held. Where a joint liability is asserted against several defendants in order to maintain an action against one or more of them in a county other than

Digitized by Google

ourt of Howard county by
ar against E. M. Brass and
recover damages alleged to
ned by her on account of a
nty against incumbrances,
sion, and quiet enjoyment
tain warranty deed execut-
by them to her. It appears
sold certain land in Wash-
this state, to Susan O.
ve her a deed therefor,
ll covenants of warranty,
possession of the premises
0; that at the time the
rass represented to Mrs.
lands were occupied by a
e would expire March 1,
e was at the First Na-
ngton, Neb.; that on or
, the agent of Mrs. Van-
gton to take possession
n and there ascertained
not holding under a lease
1st, but claimed to be
lease, and an arrange-
ted him a tenant from
ther claimed the right
d for another year, to
01. Vandecar did not
notice required to ter-
year to year because
the time of the sale
holding under a lease
1, 1900. Brass never
minate the lease, and
inated until the next
sible for Vandecar to
March 1, 1901. At-
ssion, Vandecar gave
rovided for by stat-
ing to vacate, noth-
ause it appears that
r to go no further,
lington and get the
t his own expense.
greement was made
of fact, and upon
conflicting, but the
the plaintiff in the
. Brass failing to
n, this action was
s for the breach of
n the deed above
claimed were the
and for the year
in getting posses-
the usual form.
defendants de-
e demurrer was
s, but overruled
eupon answered,
, among which
isdiction of the
was overruled,
dgment for the
to the district
on was filed

Digitized by Google

raised by the answer of the defendant. The objection to the jurisdiction of the court was overruled. A trial was had, which resulted in a verdict and judgment for the plaintiff. The defendant prosecuted error to this court, and will hereafter be called the "plaintiff."

It is contended by the plaintiff that the court erred in overruling the objection to the jurisdiction, because the county court had no jurisdiction of the subject-matter, it being an action in which the title to real estate was in question. We are unable to agree with the plaintiff, so far as this matter is concerned, for the reason that the identical question has been twice before us, and has been settled adversely to his contention. It was held in Campbell v. McClure, 45 Neb. 608, 63 N. W. 920, that a justice of the peace had jurisdiction in an action for damages based on the breach of a covenant in a deed against incumbrances where there were unpaid taxes which were a lien on the land at the date of the execution of the deed, and which the grantee was obliged to pay. This case was approved and followed in Hesser v. Johnson, 57 Neb. 155, 77 N. W. 406, in which it was said: "A county court has jurisdiction, within the statutory limit of amount, in actions to recover damages for a breach of covenant against incumbrances." It is stated in Devlin on Deeds, vol. 2 (2d Ed.) §§ 906, 907, that a lease is an incumbrance. It was so held in Fritz v. Pusey, 31 Minn. 368, 18 N. W. 94, where the court said: "An incumbrance, within the meaning of a covenant against incumbrances, includes any right or interest in the land which may subsist in a third person to the diminution of the value of the land, but consistent with the passing of the fee by the conveyance. Hence an outstanding lease is an incumbrance." It was further held in that case that: "The inability of the grantee in a deed to obtain possession by reason of an outstanding paramount right or title is a breach of the covenant for quiet enjoyment. It is not necessary that there be an eviction by process of law, or even an actual expulsion; and that when the breach of either of these covenants consists of the existence of an unexpired term or lease, the measure of damages, at least in the absence of any special circumstances, will be the value of the use of the premises for the time during which the grantee has been deprived of such use." In the body of the opinion we find the following language: "It is immaterial whether or not this contract between defendant and Coldwell created the conventional relation of landlord and tenant. Under it Coldwell was entitled to the use and exclusive possession of the premises to the exclusion of plaintiff. This outstanding lease or contract in favor of Coldwell constituted a breach of both covenants. An incumbrance within the meaning of the covenant against incumbrances includes any interest in the land which may the value of the land, but consistent with the passing of the fee by the conveyance." Rawle on Covenants, 94, 95; Greenl. Ev. (2d Ed.) § 242; Bouv. Law Dict. tit. "Incumbrance"; Prescott v. Trueman, 4 Mass. 627, 3 Am. Dec. 249. Hence an outstanding lease is an incumbrance. Grice v. Scarborough, 2 Speers, 649, 42 Am. Dec. 391; Batchelder v. Sturgis, 3 Cush. 201; Porter v. Bradley, 7 R. I. 538. It is generally stated that an eviction is necessary to a breach of the covenant for quiet enjoyment or of warranty. And no doubt the original and technical meaning attached to the word "eviction" was an expulsion by the assertion of a paramount title and by process of law. But the idea that the ouster must be by process of law has long since been abandoned. Constructive eviction is caused by the inability of the purchaser to obtain possession by reason of the paramount title. When, at the time of the conveyance, he finds the premises in possession of one claiming under paramount title, the covenants for quiet possession or of warranty will be held broken without any other act on the part of either the grantee or the claimant, for the latter can do no more towards the assertion of his title, and, as to the former, the law will compel no one to commit a trespass in order to establish a lawful right in another action. Where the incumbrance is an unexpired term or lease, the general rule—at least in the absence of any special circumstances—is that the measure of damages will be the fair rental value of the land to the expiration of the term." A covenant against incumbrances is personal, and does not run with the land. Such a covenant is broken as soon as made. Merrill v. Suing (Neb.) 92 N. W. 618. It follows that the question of title was not involved in this action, and the county court had jurisdiction to try it.

This also disposes of the second and third assignments of error, and it is unnecessary to further notice them.

It is next contended that there could be no recovery, because plaintiff's oral promise to put defendant in possession after the delivery of the deed was without any new consideration, and was therefore void. It is sufficient to say that, as we understand the case, the original contract price paid for the real estate in question was a sufficient consideration for the promise or covenant in the deed, and that the defendant herein recovered upon that covenant, and not upon any oral agreement made subsequent to the execution of the deed.

It is further contended that the defendant herein could have dispossessed the tenant and obtained possession herself, because the tenant did not pay rent for the year 1900 to any one, and, not paying rent, could not hold possession. An examination of the record shows us that at the time the deed was executed the tenant was, and had been, in pos-

Digitized by Google

n; and, if there was no payment of rent, was the fault of the plaintiff. Having ered upon the term, and it being impossi- to terminate it without six months' no- the question of the payment or non- nent of rent was immaterial, so far as defendant's right to obtain possession of premises was concerned. The tenancy g from year to year, and the tenant hav- entered upon the new term, he could not dispossessed without six months' notice, prior to the expiration of the new term. is also contended that it was the duty e defendant herein to serve the notice; she must ascertain at her peril the na- and extent of the tenant's rights. No rity in point is cited to support this con- n, and, the jury having found upon con- g evidence that the plaintiff had led the iant to believe that the tenant was g under a written lease by which his would expire on the 1st day of March, she had the right to suppose that it unnecessary for any notice to be served Plaintiff will not now be heard to at the defendant cannot recover be- o notice was served, when, by his own ent, he had led the defendant to be- at no notice was required. The evi- showed that the tenant was holding lease, or an arrangement which made tenant from year to year, and there- could not be dispossessed without six notice.

the expenses which the jury were to consider, there is no reason why ld not be recovered. The plaintiff, n by the evidence, agreed to pay fore they were incurred, and they de at his request.

eful examination of the record fails e any reversible error, and we there- mmend that the judgment of the dis- t be affirmed.

T and GLANVILLE, CC., concur.

URIAM. For the reasons given in oing opinion, the judgment of the urt is affirmed.

FF v. BYERS BROS. & CO.

Court of Nebraska. Oct. 7, 1903.)

MORTGAGE—DESCRIPTION—EVIDENCE DEBT—HERD LAW—TRESPASSING ANIMALS.

mortgaged stock are described as be- certain farm owned by the mort- e county of his residence, the mort- void for uncertainty, if the descrip- animals is not applicable to any oth- such farm.

issory note in the hands of the en after maturity, evidence of the a debt.

ttel Mortgages, vol. 9, Cent. Dig. § 98.

ing under the herd law, be bound by an award made without giving him a hearing or an opportunity to be heard.

4. Notice to the owner of cattle in such a proceeding is not notice to the mortgagee.

5. The remedy by distress under article 3, c. 2, Comp. St. 1901, is given to enforce in a summary manner a claim for damages against the owner of cattle who is charged with the duty of keeping them off the cultivated lands of others. A mortgagee without possession is not an owner within the meaning of the statute.

(Syllabus by the Court.)

Error to District Court, Pierce County; Boyd, Judge.

Action by Byers Bros. & Co. against George Goff. Judgment for plaintiffs, and defendant brings error. Affirmed.

W. W. Quivey, for plaintiff in error. C. B. Willey, for defendants in error.

SULLIVAN, C. J. This was an action brought by Byers Bros. & Co., a partnership, against George Goff, to recover possession of four cows, two heifers, and four steers. These cattle were seized damage feasant, and were held by the defendant, a constable, under an execution issued by a justice of the peace for the enforcement of an award made in accordance with the provisions of the herd law. The plaintiff's claim is based upon a chattel mortgage executed to it by McBride, the owner of the cattle, to secure an indebtedness which had matured before the seizure, and is still unpaid. The jury in the district court found, in obedience to a peremptory instruction, that the right of possession was in the plaintiff, and judgment followed the verdict.

Several questions raised by the assignments of error are entirely free from difficulty, and will be noticed only to give assurance that they have not been overlooked. On the question of whether the chattel mortgage created a lien, the evidence is, we think, capable of but one construction. McBride, who testified for plaintiff, and seemed rather eager to serve it, was apparently uncertain whether he ought to claim or disclaim ownership; but, notwithstanding his shifts, shuffles, and evasions, it is evident that he was the sole and absolute owner of the property when it was mortgaged. The facts are conclusively proven, and it was only with respect to their legal effect that the witness wavered.

The claim that the mortgage is void for uncertainty of description rests upon no reasonable foundation. The animals are described with great definiteness and particularity, and there is nothing in the record to indicate that the descriptions given are applicable to any other cattle owned by McBride, and kept upon his farm in Pierce county.

It is said that the evidence does not show that the original indebtedness due from McBride to plaintiff had not been paid wher the note which the mortgage was given to se cure was executed. As men rarely give no-

Digitized by Google

renewal of the old.

The question next to be considered is whether plaintiff is concluded by the proceedings had under the provisions of the herd law. The first and second sections of the act (Comp. St. 1901, c. 2, art. 3) are as follows: Section 1: "That the owners of cattle, horses, mules, swine, and sheep in this state, shall hereafter be liable for all damage done by such stock upon the cultivated lands in this state as herein provided by this act." Section 2: "That all damage to property so committed by such stock running at large, shall be paid by the owners of said stock; and the person whose property is damaged thereby, may have a lien upon said trespassing animals, for the full amount of damages and costs, and may enforce the collection of the same by the proper civil action." Other sections provide that any person may take up stock found trespassing upon his cultivated lands, and may, after notifying the owner, have the damages fixed by arbitration, and the cattle sold for satisfaction of the award. In this case the mortgagee was not given notice of the distraint, and consequently could not be bound by the proceedings which resulted in the award and the execution for its enforcement. No person can be deprived of his property without due process of law. Every one, before being deprived of any valuable right by the exercise of judicial or other governmental power, must be given a hearing, or at least an opportunity to be heard. Any proceeding in which these are denied is not due process of law. McGavock v. Omaha, 40 Neb. 76, 58 N. W. 543; Horton v. State, 60 Neb. 701, 84 N. W. 87. Obviously, notice to the owner of the mortgaged cattle that they had been seized and were being held under the provisions of the herd law was not notice to the mortgagee. It was given no opportunity to controvert by proof the claim of the distrainor, and therefore, on principles of natural justice, it could not be bound by the award. But there is another reason why the court was right in directing a verdict in favor of the plaintiff. The remedy by distress is given to enforce in a summary manner a claim for damages against the owner of cattle who is charged with the duty of keeping them off the cultivated lands of others. 2 Am. & Eng. Encyc. Law (2d Ed.) 358. No such duty rests upon a mortgagee. Having no control over the cattle, he is guilty of no actionable wrong when the owner or person having them in charge suffers them to trespass. An agister is an owner within the meaning of the statute (Laflin v. Svoboda, 37 Neb. 368, 55 N. W. 1049), but this is because when a trespass is committed the fault is his. The statutory lien is given to the person injured to enable him to obtain satisfaction from the person through whose fault

and it would be an
property could be t
of a claim upon whi
liable. Under the s
a lien for damages
was held that the s
nate to the lien of a
by the owner. The
the lien the statute
ing damage can onl
the ownership of th
tary permission the
lard was the person
extend to such titl
owner of." This vi
tirely sound. Whe
menced plaintiff w
mortgage, entitled
cattle, and its rig
sion was not impa
against McBride.

The judgment is a

DONAHUE v. ST

(Supreme Court of

MANDAMUS-

1. Mandamus is a
be allowed only in f
a proper case present
where it is apparent
gratify the spite of
where the relator ha
approved the acts co

(Syllabus by the Co

Commissioners' C
3. Error to Distric
Baxter, Judge.

Application by th
Neils Seieroe, for
John J. Donahue.
defendant brings er

W. J. Connell
plaintiff in error.
defendant in error.

DUFFIE, C. Thi
ing brought by the
the chief of police
purpose being to c
certain houses of
The district court
which judgment the
error. By section
St. 1901, the chief
Omaha is subject t
and board of fire a
to the order of th
appointment is ma
suppose that he is
ply with the directi
or assenting theret
it is certainly a ser

¶ 1. See Mandamus,

to the suit. Alger v. Seaver, 138 Mass. 331.

There is another matter which, in our opinion, calls for a reversal of the case. The record discloses that the houses complained of, and against which it is sought to direct the action of the chief of police, were built by Seleroe for one Slobodisky. These houses are located in what is known as the "Burnt District" of Omaha, and were, according to the evidence of the petitioner, kept as houses of prostitution for from five to seven years prior to the commencement of this action. A contract existed between relator and Slobodisky, the exact terms of which do not appear, but one of its conditions was to the effect that Slobodisky was to pay the relator $250 per month until the contract price for the erection of the buildings was fully paid. Some misunderstanding or disagreement arose between the parties, and one Harris was appointed to collect the rents from the buildings and divide the same between them. We copy from the relator's cross-examination: "Q. What was done with that money after Harris collected it? A. He was to keep the money until he had a certain amount collected. Then he pays it over to Slobodisky. Q. To whom? A. To him just the same—he pay to me. Q. You knew where it came from? A. Yes; from Harris. Q. You knew where it came from? A. I knew he got it from those houses. Q. And those women? A. I suppose so. Q. You knew what the women were doing—how they earned it—you knew that? A. Yes, sir." While the record is not entirely clear upon the question, we are satisfied from what does appear that Slobodisky, before paying in full for the erection of these buildings, refused further payments, and that, in an action brought by relator to enforce payment, judgment went for the defendant, and relator was denied the assistance of the court in attempting to collect his claim. Some time thereafter he sent a written notification to the chief of police, as follows: "I, Neils Seleroe, a resident, citizen, and taxpayer of the city of Omaha, in the state of Nebraska, hereby demand that you report to the police judge of the city of Omaha, Nebraska, in writing, forthwith, the names of all occupants or inmates of houses of ill fame, and the names of persons of either sex who derive their support from the wages of prostitution; and demand is hereby made upon you that you forthwith make complaint against and cause the arrest of all such, without delay, said houses being situated upon lots 7 and 8 in block 70 in the city of Omaha, Nebraska, except No. 902 Capitol avenue, and said houses are also known and designated as follows." (Here follows a description of the houses by their street number.) In Hale v. Risley, 69 Mich. 596, 37 N. W. 570, it is said: "Mandamus is

where it is apparent that
gratify the spite of a
nor where the relator ha
ized, or approved of the
The above, we think, a
rule, and should be fol
We are satisfied from t
that the relator built the
knowledge of their inten
so, but his contract call
of $250 per month, and
time this amount was p
knowledge that it was d
tutes renting these house
money was being paid hin
rest quietly, and allow the
which he now complain
made no complaint until
tion of the rents. Unde
ces, it is clear that he occ
ask the court to extend
prerogative writ.

We think that the court
the writ, and recommend
ing its judgment.

KIRKPATRICK and P

PER CURIAM. For th
the foregoing opinion, th
the judgment of the di
firmed.

GILLISPIE v. ST

(Supreme Court of Nebras

MALICIOUS PROSECUTION—
OF COUNSE

1. One who seeks advice
erence to the commencement
ecution is bound to act in
matter. He is required to
counsel a full and fair state
terial facts known to him. I
ground for believing that
would tend to exculpate the
charge, good faith requires t
make further inquiry with
facts, and communicate the
ed to counsel, or that he shal
belief of their existence, in
investigate with reference th
to account, in forming his op
tion obtained with reference
not, however, required to in
quiry to ascertain whether
would tend to the exculpatio
cused. If he honestly belie
possession of all the material
a full and fair statement of
counsel, and acts in good f
given him, this is sufficient t
the charge of malicious prose

2. Evidence examined, and
a defendant failed to make a
closure to his counsel of th
him prior to the commencem
prosecution.

¶ 1. See Malicious Prosecution, § 42.

Digitized by Google

3. Error to District Court, Douglas County; Baxter, Judge.

"Not to be officially reported."

Action by Charles Stafford against Thomas Gillispie. Judgment for plaintiff, and defendant brings error. Affirmed.

W. C. Lambert, for plaintiff in error. A. L. Lutton and E. R. Leigh, for defendant in error.

DUFFIE, C. On a certain day in December, 1900, one Coleson and a stranger entered the place of business of the plaintiff in error, Gillispie, who was a saloon keeper in South Omaha, Neb., and the stranger induced the plaintiff in error to cash two forged checks, aggregating $60 and upwards, and purporting to have been issued by the Cudahy Packing Company to two of its employés. Several days afterwards, and after Gillispie had learned of the forgery, Coleson again visited the saloon, and was accused by the former with being in confederacy with the stranger, and threatened by him with prosecution unless he should disclose the name and identity of his supposed accomplice. After some hesitation and apparent attempt at evasion, Coleson, under the stress of such importunity, gave to Gillispie the name of the defendant in error, Charles Stafford, as that of the party guilty of the transaction. Stafford was a young man, then and for a considerable time previously employed by one Rushford, a respectable tradesman in said city, and of good reputation and innocent. Gillispie at once, and without making further inquiry, repaired to the office of the police judge and prosecuting attorney of the city, and, after relating to them the foregoing circumstances, was advised by the attorney to verify and file a complaint for the arrest of Stafford upon the charge of forgery, which he immediately did, and the accused was apprehended and thrown into jail on the same evening. Coleson had told Gillispie that Stafford was employed by Rushford, whose place of business was not far distant from the saloon. Gillispie saw the accused at the jail on the evening of the arrest, but on account of darkness, and of the fact that the features of the latter were obscured by coal dust, he was unable to satisfy himself as to his identity with the forger without the assistance of Coleson, who was not present, and whom he was unable to find. At 9 o'clock on the following morning Stafford was released upon bail, and at his request the case was continued until the 3d of January, and afterwards until the 9th of that month. On the latter date at the police court all three of the parties met for the first time, and Gillispie and Coleson agreed that the accused was not the guilty party, and united in requesting a dismissal of the prosecution, which was accordingly done. This action was then begun by Stafford against Gillispie for damages verdict and judgment in favor of the former, which the latter seeks to have set aside by this proceeding in error.

There are two classes of exceptions taken to instructions given by the court of his own motion. The first applies to several separate instructions, but will be sufficiently illustrated as to all by the criticism applied to one of them. A part of the third instruction is as follows: "'Probable cause,' as used in these instructions, is the existence of such facts and circumstances as would excite the belief in a reasonable mind, acting on the facts within the knowledge of the prosecution, that the person charged was guilty of the crime for which he was prosecuted." Counsel for plaintiff in error contends that this instruction is erroneous, because not qualified by the insertion after the word "prosecution" of the words "under like circumstances," or some similar expression, so as to expressly call the attention of the jury to the fact that the defendant may be supposed to have been, at the time he caused the arrest, laboring under some mental excitement due to the fact that he had been defrauded. We think, however, that such an amendment would have accomplished nothing beyond rendering the instruction tautological. In this and the remaining instructions assailed on this ground the attention of the jury was called to the circumstances tending to produce in the mind of the prosecutor a belief in the truth of his accusation, and we think that the jury, having heard the testimony and the argument of counsel, must have been sufficiently aware that they were entitled to take into account any circumstances of mental perturbation likely to confuse the judgment or disarm the caution of an ordinarily prudent man.

The remaining instruction attacked by counsel for plaintiff in error is the following: "If you find from all the evidence that the defendant did not, at or before the time he commenced the prosecution complained of, disclose in good faith all the facts in connection with said affair within his knowledge at the time, and such facts as he could have obtained by the use of ordinary care and diligence, to the said Henry C. Murphy, Esq., an attorney at law, then such consultation with the said Murphy, and in acting upon the advice given him by said Murphy upon the representations so made to him by the defendant, would be no excuse for the prosecution of the plaintiff, and would be no defense to this action." The specific objection made to this instruction is to the following phrase therein, "and such facts as he could have obtained by the use of ordinary care and diligence." There are cases in our Reports which seemingly approve the law as announced in this instruction, while other cases apparently approve a different rule. In Turner v. O'Brien, 5 Neb. 542, Justice Gantt, at page 546, in speaking of the rule allowing the advice of an attorney to be urged on

Digitized by Google

the defendant in respect to taking the advice of an attorney in relation to the matter previous to the commencement of the prosecution was also properly admitted. But, to repel the imputation of malice or establish probable cause by such evidence, it must appear in proof that the opinion of counsel was fairly asked upon the real facts, and not upon statements which conceal the truth or misrepresent the cause of action. If the law were otherwise, nothing would be more easy than to shelter the most malicious prosecution under the opinion of counsel, honestly given, but under a total mistake of the facts. He must not withhold any evidence or information from his counsel, but on the contrary, he must fairly, fully, and honestly inform his counsel of all the facts and information known to himself, and then he must pursue the course pointed out by his legal adviser." It will be seen that there is no intimation in the language used that the defendant must not only inform his counsel of all facts within his knowledge, but also such as he could have ascertained "by the use of ordinary care and diligence." In Jonasen v. Kennedy, 39 Neb. 313, 58 N. W. 122, the first headnote is as follows: "In an action for a malicious prosecution, in order that reliance upon the advice of counsel may operate as a defense, it must be made to appear that before instituting the prosecution the defendant had made a full, fair, and true statement to such counsel of all the information in his possession, and that he instituted the prosecution in good faith, relying upon such advice." These two cases apparently approve the rule that advice of counsel, taken on the facts known to the defendant at the time, is sufficient as showing probable cause for the prosecution. But in Manning v. Finn, 23 Neb. 511, 37 N. W. 314, an instruction was approved to the effect that advice of counsel upon facts known to the prosecutor was not sufficient to repel the presumption of malice or want of probable cause, unless counsel was further informed of such facts as the use of ordinary care and diligence would have discovered. And in Peterson v. Reisdorph, 49 Neb. 529, 68 N. W. 943, and Jensen v. Halstead, 61 Neb. 249, 85 N. W. 78, this court again apparently approved instructions requiring the defendant to disclose to counsel such facts as could have been obtained by the use of ordinary care and diligence. All of these cases turned, however, upon some other question raised by the record, and the specific objection now urged against the sixth instruction has never, so far as we have been able to discover, been alleged as error, and submitted to the court for determination.

An examination of the opinions from other states leads us to believe that the weight of authority is in favor of the rule requiring the defendant to inform counsel not only

would have disclosed. But courts of high standing have adopted what appears to us as the more reasonable doctrine—that, where advice of counsel is honestly sought, and the facts and diligence used in discovering those facts fairly submitted to competent counsel, his advice ought to be a protection to the party, and proof sufficient that he had probable cause to institute the prosecution. It is urged against this rule that by its enforcement one commencing a criminal prosecution with the most malicious motives and entire want of probable cause might shield himself behind the advice of an unscrupulous or incompetent attorney. In reply to this it may be said that dishonest parties often take advantage of the most beneficent legal rules in an attempt to escape punishment or damage on account of their wrongdoing, and the fact that injustice may occasionally arise because of a rule of law founded on reason and public policy ought not to operate in its disfavor. Public policy and the enforcement of our criminal laws require that, where probable cause exists to believe one guilty of a criminal offense, a prosecution therefor should be instituted; and no citizen commencing such a prosecution with honest motives, and from a desire to enforce the laws of the land, should be made liable in damage because of an honest mistake, or the development of facts in the case of which he was not aware at the time of instituting the action. We also think that the attorney who may be consulted in such a case is required to go further in his opinion than to give his judgment upon the facts disclosed to him, and that his advice covers his belief as to whether sufficient inquiry has been made by the defendant to ascertain other facts which further investigation might disclose. In other words, the advice of a reputable attorney that probable cause exists to believe the defendant guilty of the crime charged, includes his judgment not only upon the facts known to the defendant at the time and disclosed to him, but also that the defendant has exercised such diligence in inquiry and investigation as to make a prima facie case and warrant the belief that further inquiry was not necessary, and would develop nothing to rebut what was already known. Advice of counsel is sought to ascertain whether a criminal action should be commenced against the suspected party, and the client's inquiry, in legal effect, is this, "On investigation made and the facts discovered, should I commence a criminal prosecution?" The later cases are apparently inclining to this view of the law. Johnson v. Miller (Iowa) 29 N. W. 743; Holliday v. Holliday (Cal.) 55 Pac. 703; Smith v. Insurance Co. (Cal.) 40 Pac. 540.

The question whether the defendant in good faith sought the advice of an honest

Digitized by Google

knowledge, or that he had reason to believe existed, in connection with the case, and whether the attorney gave an honest judgment upon these facts, is one which should properly go to the jury. The question of collusion between the attorney and client in these cases can as safely be left to the jury as can the question of collusion and fraud between other parties in other cases; and assuming—what is not reasonable—that a reputable attorney would lend himself to the prosecution of a case where his advice was honestly sought, and where no probable cause existed for the prosecution, no doubt can exist that a careful investigation will disclose such a state of facts if they exist and defeat such an attempted evasion of the law. While we believe that the sixth instruction was erroneous, we also think that it was error without prejudice. The record discloses that the defendant believed that Coleson, upon whose information he acted, was in collusion with the party who passed the forged checks, and that he threatened Coleson with arrest and prosecution if he did not disclose the name and identity of that party. These were facts which were not disclosed to his attorney. In his examination in chief Gillispie was asked the following questions: "Q. State, Mr. Gillispie, just what you said on that time and upon that occasion, in the presence and hearing of Mr. Murphy, in respect to the complaint which you afterwards filed. A. I said that he was pointed out to me as the man that cashed the check, or raised the check. Q. What else did you say? A. I did not say anything else, only I would like to prosecute it." If Mr. Murphy had been told that Stafford was named as the man who passed the check, but that such information was obtained from Coleson under a threat of arrest and prosecution as being accessory to the crime, it is hardly probable that he would have advised the arrest, without further inquiry, upon the mere statement of one whom the circumstances indicated as an accomplice, and who was threatened with prosecution in case he did not point out and name the party with whom he acted in the perpetration of the crime. The natural and reasonable inference under such circumstances is that Coleson would name some one in order to avoid the immediate threatened arrest, and, if guilty as an accomplice in the crime, it is not at all probable that he would name the real party who was associated with him in its perpetration.

We recommend the affirmance of the judgment of the district court.

ALBERT, C., concurs.

PER CURIAM. The conclusions reached by the Commissioners are approved, and, it appearing that the adoption of the recommendation of the district court be affirmed.

WATKINS v. YOULL et al.

(Supreme Court of Nebraska. Oct. 7, 1903.)

SPECIFIC PERFORMANCE—CONTRACT TO CONVEY LAND—OFFER TO PERFORM—DEED OF HOMESTEAD—TENDER OF PRICE—SEVERABLE CONTRACT.

1. In a written agreement for the sale of real estate, consisting of three quarter sections, it was stipulated on behalf of the vendee that he might elect not to take any of the quarter sections if he could not also obtain the conveyance of a fourth quarter section. The vendee failed to obtain a conveyance of the fourth quarter section, and elected to take the three quarter sections. *Held*, that he was entitled to specific performance of the agreement to convey.

2. A vendor under an executory contract to convey real estate on the day of performance presented himself at the bank where his deed had been deposited as an escrow, offered to convey, and demanded the purchase money. The demand was refused, and it was several days before the vendee concluded to take the land. *Held*, that the vendor was relieved from the obligation to perform.

3. A contract to convey a homestead was signed only by the husband, but both husband and wife signed and acknowledged a deed for such homestead, placing the deed in escrow to await the payment of the purchase price. The acknowledgment was taken before a notary, who was disqualified by reason of his direct pecuniary interest in the conveyance. *Held*, that the vendee was not entitled to a specific performance of his contract as to such homestead.

4. A vendor, under an agreement to convey real estate, on the day of performance of the contract appeared at a bank where he had placed a deed for the land in escrow and demanded the purchase money. He was tendered a check signed by the vendee, but refused it. The cashier then offered to cash the check and give him the money. *Held*, that the vendee was entitled to a conveyance.

5. Contract for the conveyance of real estate between a vendee and three vendors, each owners of separate tracts of land, construed, and *held* to be severable and independent as to each vendor.

(Syllabus by the Court.)

Commissioners' Opinion. Department No. 3. Appeal from District Court, Boyd County; Harrington, Judge.

Action by F. E. Watkins against Charles Arthur Youll and others. Judgment for defendants, and plaintiff appeals. Affirmed.

McNutt & White, A. L. Tingle, and Woolworth & McHugh, for appellant. W. T. Wills and M. F. Harrington, for appellees.

KIRKPATRICK, C. This is a suit brought to enforce the specific performance of a contract entered into between the parties to this case for the sale of certain lands located in Boyd county. Judgment was entered by the trial court refusing specific performance and dismissing the petition of plaintiff for want of equity. The case is brought to this court by appeal by plaintiff. The only question involved is whether the judgment of the trial court is right under the pleadings and evi-

Digitized by Google

Nebraska, May 24, 1901. It is hereby agreed by and between the parties hereto that the warranty deeds, to-wit: for the northeast quarter of section 17, town. 34, range 12, and the northwest quarter of section 17, and the southwest quarter of section 17, together with the checks hereto attached, each be deposited in the Bank of Butte, at Butte, Nebraska. F. E. Watkins, or his agent agrees to pay the sum of $1,975 for the northeast quarter of section 17 and $2,550 for the northwest quarter of said section 17 and $600 for the southwest quarter of said section 17, on or before June 15, 1901. The several grantors mentioned in said deeds agree to furnish abstracts of title showing clear title to said land to be delivered on payment of said sums of money mentioned; and three checks of F. E. Watkins for the sum of $125 each shall be considered part of the purchase price herein mentioned for said described lands; and in case said F. E. Watkins shall fail to pay the balance of said purchase price in case mentioned said checks shall be delivered to the grantors named in said deeds together with said deeds, and this contract shall in such case be determined. Provided further, that in case Ezra S. Bell and wife shall fail to convey to F. E. Watkins the southeast quarter of said section 17, town. 34, range 12, in accordance with the contract of date May 24, 1901, then and in that case the deeds herein mentioned shall be delivered to the grantors named therein at the option of F. E. Watkins, and the checks shall be returned to F. E. Watkins. [Signed] C. A. Youll. H. C. Bell. H. A. Bell. F. E. Watkins, by J. E. De Forrest, Agent."

Separate answers were filed by the owners of the several tracts of land. These answers need not be set out in detail. It will suffice to say that the answers present the defenses following: First, a want of mutuality in the contract; that it was a mere option, so far as the purchaser was concerned; and that, being unenforceable as to the purchaser, it would not be specifically enforced as against the grantors named therein. Second, that Hiram A. Bell tendered performance of the contract on the 15th day of June, the day performance was due; and that the agent of the purchaser, acting for him, declined to carry out the contract and to pay the purchase price, because the contract made by Ezra S. Bell for the southeast quarter of the section, and of date May 24th, had not been consummated by Ezra S. Bell procuring his wife's signature to the deed; and that, on the failure of the purchaser to carry out the contract on the day named, Hiram A. Bell declined to be further bound by the contract, and demanded the surrender of his deed. Third, that the land owned by Charles A. Youll and wife was a homestead, and that the deed had never been acknowledged be- not be enforced as against them. Fourth, that the contract was an entirety, and not severable, and, being unenforceable as to the Youlls and Hiram A. Bell, it could not be enforced as to the remaining defendants, H. C. Bell and wife.

Regarding the first contention, it may be said that we are of opinion that the want of mutuality in a contract is no defense. Defendants saw fit to enter into the contract worded as it is, leaving with the plaintiff, under its terms, the option not to complete the contract if Ezra S. Bell and wife failed to convey. It is contended by counsel that under the rule in this state a unilateral contract will not be enforced. We do not so recognize the rule. The opposite doctrine seems to have been firmly established in this state by the decisions of this court in Bigler v. Baker, 40 Neb. 325, 58 N. W. 1026, 24 L. R. A. 255, and other cases therein cited. We are therefore of the opinion that the answers, so far as the plea of want of mutuality is concerned, fail to state a defense.

It is disclosed by the evidence that the trial court was justified in finding that H. A. Bell appeared at the bank in Butte, where the papers had been deposited in escrow, and notified the holder of the papers that he was ready to complete the transfer, and that he desired the money for his land. It is further disclosed by the evidence that De Forrest, who was acting as the agent for the purchaser, had gone to the bank in the morning of the same day, and deposited three checks with the cashier covering the purchase price of the three tracts of lands, and had taken up and destroyed the three forfeit checks of $125 each which had been deposited with the deeds. It is further disclosed that Ezra S. Bell and wife had failed to execute a deed for the southeast quarter of the section. Accordingly, De Forrest, when he left the three checks with the cashier, told him to close up the sale with Youll and H. C. Bell, providing the abstracts were all right, and to give them the checks and take their deeds. But he directed the cashier not to deliver the purchase price for the land of H. A. Bell, but to hold that matter for a few days to see if they could not get the deed for the fourth quarter from Ezra S. Bell and wife. The lands owned by the father, H. C. Bell, a son, H. A. Bell, a son-in-law, C. A. Youll, and another son, Ezra S. Bell, composed an entire section of land. Watkins, in his contract, reserved the option not to take any of the lands if he failed to get that of Ezra S. Bell, the deal between Watkins and Ezra S. Bell being included in another and separate contract. A forfeit of $25 was put up by each of the parties to that contract. Ezra S. Bell signed the deed, and was to procure the signature of his wife, and on failure so to do he was to forfeit the $25 which he had deposited. It is probable that the purpose of

Digitized by Google

with H. A. Bell was to see if, holding it open, Ezra S. Bell could not still be induced to convey. However, whatever the purpose, we are of opinion that H. A. Bell, having appeared on the day performance of the contract was due, and tendering performance, which was declined, was no longer bound to carry out the contract, and that a court of equity ought not to specifically enforce the contract as against him, as it appears that it was several days later before the purchaser concluded to take the quarter owned by him. We are therefore of opinion that the judgment of the trial court, in so far as the quarter of H. A. Bell is concerned, is right, and should be affirmed.

As to a third defense in favor of Charles A. Youll and wife, it is contended and abundantly supported by the proof that the quarter section which the Youlls were proposing to sell was their homestead. The deed of conveyance was executed before E. G. Barnum, who was acting as an agent for the purchaser, F. E. Watkins, his contract being that he would assist De Forrest in making purchases of land around Butte, and for each quarter section deeded to Watkins he should have a commission of $50. So, in the matter of the conveyance of the homestead of the Youlls, the notary public Barnum, who took the acknowledgment, had a direct pecuniary interest in procuring the conveyance to be made. We are of opinion that he was disqualified, by reason of this pecuniary interest, to take the acknowledgment. It is clearly against public policy that a notary public, before whom the acknowledgment to a conveyance is taken, should have an interest such as Barnum is shown to have had in the conveyance in question. Chadron B. & L. Ass'n v. O'Linn (Neb.) 95 N. W. 368. It follows that as to the northwest quarter the judgment of the trial court is right, and should be affirmed.

It is finally contended that the contract was joint and entire, and that, being unenforceable as to some of the defendants, it cannot be enforced as to Hiram A. Bell. We are unable to find merit in this contention. The contract of each of the defendants is plainly independent and severable. The undisputed testimony shows that the money necessary to pay the purchase price due Hiram C. Bell was in the bank at Butte on the 15th day of June, when performance was due. A check covering the purchase price had been deposited with the cashier of the bank. H. C. Bell objected to this check, claiming that he did not sell his land for a check, but for money. This objection does not merit consideration. The cashier informed him that he could obtain the money on the check. We are unable to see wherein H. C. Bell has presented any defense to plaintiff's cause of action. We are therefore of opinion that the judgment of the trial court as to the defendant H. C. Bell is wrong, ommended that, so far as the judgment of the trial court relates to the quarter section owned by Hiram C. Bell, the judgment be reversed, and the cause remanded, with directions to the trial court to enter a decree in accordance with the prayer of the petition, and that in all other respects the judgment be affirmed.

DUFFIE and POUND, CC., concur.

PER CURIAM. For the reasons stated in the foregoing opinion, the judgment of the trial court, so far as it relates to the quarter section owned by Hiram C. Bell, is reversed with directions to the trial court to enter a decree in accordance with the prayer of the petition; in all other respects the judgment is affirmed.

FARMERS' & MERCHANTS' BANK OF STERLING v. HOFFMAN et al.

(Supreme Court of Nebraska. Oct. 7, 1903.)

HUSBAND—DESERTION OF WIFE—EXEMPTIONS—CLAIM BY WIFE—CHATTEL MORTGAGE BY HUSBAND—RIGHTS OF PARTIES.

1. One F. deserted his wife, and left the state, leaving a crop of standing matured corn and other personal property. The wife claimed all the property as exempt from attachment by the husband's creditors. Knowing of such claim, the plaintiff took from the husband a chattel mortgage and bill of sale of the property as security for a pre-existing debt and an additional sum loaned to induce the husband to give the security. *Held*, in a replevin action for the corn, that the taking of such security was not per se a fraud upon the wife. *Held*, further, that the husband's desertion did not transfer the title of his exempt property to his wife, nor divest him of power to create a lien therein.

2. F. having absconded, a creditor caused an attachment to be levied on his personal property. His wife filed an inventory and claim of exemptions, whereupon the creditor dismissed the action. *Held*, that an appraisement thereafter made did not effect a change of title of the exempt property from the husband to the wife.

Commissioners' Opinion. Department No. 2. Error to District Court, Johnson County; Jessen, Judge.

"Not to be officially reported."

Action by the Farmers' & Merchants' Bank of Sterling against Otto Hoffman and others. Judgment for defendants, and plaintiff brings error. Reversed.

J. C. Moore and S. P. Davidson, for plaintiff in error. E. Ross Hitchcock and George A. Adams, for defendants in error.

GLANVILLE, C. Plaintiff in error commenced an action of replevin in justice court of Johnson county, and by intervention the principal defendant, Nellie Foss, became a party. The parties will be designated as "plaintiff" and "defendants," as they stood in the trial court. There are many peculiarities in the record, and to give a full history of the case and the facts leading up to it

Digitized by Google

is as follows: "On the 29th of October Mr. Livingston was out of town—the justice in charge of the docket—and Mr. Moore had a motion to dismiss the attachment suit, and he told me he had a motion, and wanted to leave there to be filed that day. I said, 'If you want that, and are afraid some one will carry it off, sit down and write it on the justice docket.'" At the same time plaintiff's attorney left a paper to the same import, which was afterwards entered on the docket as of that date. Three days later the officer who levied the attachment made the appraisement in question. It seems further that application had been made to the district court for an order or writ requiring the officer to proceed to make the appraisement, but that by some understanding of the attorneys no writ was to issue, and none did issue. This is shown by the oral testimony of attorney for Mrs. Foss. The appraisement was objected to "as incompetent, irrelevant, immaterial; further, at the time the paper was filed and the appraisement made the officer was without jurisdiction to make the appraisement, the suit having been dismissed three days before." This was overruled, and an exception taken. The court instructed a verdict for the defendants in the manner hereinafter stated; and we are persuaded that, if the trial court was right in the theory upon which it decided the case, there is no prejudicial error in its ruling on this evidence. We do not think Mrs. Foss acquired any legal right in or to the property involved in this action by virtue of the attachment, inventory, and appraisement, and the only value of the evidence relating to those proceedings is in the fact that thereby, or by what led up to them, the plaintiff was made to know the situation and claim of Mrs. Foss with reference to the property before it took the mortgage and bill of sale under which it claims title.

At the close of the evidence the bill of exceptions shows the following: "By the Court: It is mutually agreed that the value of the corn at the time the same was taken was $241.95, and that no account need be taken of the stalks and fodder, hauling and husking. I will hold in this case that if the jury find in this case that Foss was married to the woman at the time, and lived in the community at the time, and her husband abandoned her and absconded, this property mentioned in the evidence was all of the property he had; that she had a right to claim it all after he absconded. Although he made 1,000 bills of sale or chattel mortgages, they availed nothing after his absconding, and it was exempt in law as if he stayed at home, and made nothing at all. In other words, the court holds a man cannot avoid the law in that way. Gentlemen of the jury, you are instructed that there can be but one verdict rendered in this case, and that is in $241.95. The court holds that the bill of sale and chattel mortgage offered in evidence in this case, under the law applicable to this case, are absolutely nullities, for the simple reason the plaintiff in this case knew that this defendant Mrs. Foss claimed the property as the wife of the husband who had abandoned her. You will therefore return a verdict for this defendant, and fix the value of the property taken by the plaintiff at $241.90. Plaintiff excepts." If the trial court is right in this ruling, the judgment must stand; if wrong, it must be reversed. As a matter of law, did the absconding husband lose by that act his power to sell or to appropriate to the payment of his just debts his personal property which he left behind when he deserted his wife, and was the plaintiff's mortgage and bill of sale of such property, taken with knowledge that the husband had absconded, and that the wife intended to hold the property if she could, void because of such knowledge? By section 4 of our homestead law (Comp. St. 1895, c. 36, § 3257), "the homestead of a married person cannot be incumbered or conveyed unless the instrument by which it is conveyed or incumbered is executed and acknowledged by both husband and wife." By section 14 of our statute of frauds, as amended in 1897 (Laws 1897, c. 35, p. 241), it is provided "that any conveyance either by way of mortgage or otherwise, or any sale or transfer of household goods, or any interest therein owned by a husband or wife, or by both husband and wife, and used by them in their dwelling house, or purchased or held by them, or either of them, for use in their family, shall be void unless such conveyance, mortgage, sale or transfer shall be executed and acknowledged by both husband and wife, in the same manner conveyances of real estate are required to be signed and acknowledged by the laws of this state." These are the only provisions of our statutes curtailing the power of the owner over his property because of its exempt character, or its use by his family. Some of the holdings of this court touching the rights of a married woman in respect to exempt property are as follows: "Where a husband has absconded from the state, and the maintenance and support of the family thereby devolves upon the wife, and it appears that neither she nor her husband is the owner of lands, town lots, or houses subject to exemption as a homestead, she, as the head of the family, is entitled in lieu thereof to goods of the value of $500." This holding was announced in State ex rel. Scoville v. Wilson, 31 Neb. 462, 48 N. W. 147. This was a mandamus case, brought to compel the officer holding attachments to appraise and set off to the relator exemptions allowed by law. The relator was the wife of the debtor who had absconded, and whose whereabouts were unknown. She filed her

Digitized by Google

in the opinion it is said: "In the case of Frazier v. Syas, 10 Neb. 115, 4 N. W. 934, 35 Am. Rep. 466, where the husband had absconded, but the wife remained on the homestead, and, she being the head of the family, claimed the benefit of the exemption, it was held that she was entitled to the exemption. That decision was approved in Hamilton v. Fleming, 26 Neb. 240, 41 N. W. 1002, where it is said 'that, to hold that by the departure of the husband the family would be deprived of the right to hold such property would, in effect, destroy the beneficent purpose of the exemption laws.' These decisions, in our view, state the law correctly." The case of State ex rel. Stevens v. Carson, 27 Neb. 501, 43 N. W. 361, 9 L. R. A. 523, 20 Am. St. Rep. 681, was also an application for mandamus, but the application was made by the husband, and owner of the property, and it was held: "The fact that relator, who was the head of a family, transferred the property to his wife, who instituted an action of replevin against the officer making the levy, but was unsuccessful in her suit—the property being held to be that of her husband—will not deprive the debtor of the benefit of the exemption laws, even though he may have testified upon the trial that the property belonged to his wife, and that he had no interest in it." In the body of the opinion it is said: "It is a well-established and settled doctrine of the courts not only of this state, but of all others, so far as we are advised, that exemption laws should be liberally construed in favor of the debtor; the purpose being to prevent the wresting from him of the property which is set apart and used exclusively for the benefit of the family which is dependent upon him." The case of State ex rel. Lucas v. Houck, 32 Neb. 525, 49 N. W. 462, was a similar application, made on the part of a wife living with and caring for a disabled husband. The levy was made on a debt contracted by her, and her claim was to exemptions in her own property against a levy to satisfy her own debt, claiming to be the head of the family, and it was held that "for the purposes contemplated by sections 521, 522, and 523 of the Code of Civil Procedure the wife was the head of a family," and she was held entitled to the exemptions. In Hamilton v. Fleming, 26 Neb. 240, 41 N. W. 1002, it was held in an action by a wife for the wrongful selling of her exempt property by an officer on writs issued against her: "Where the property levied upon consisted of household goods, such as bedding, dishes, bed clothing, etc., belonging to the wife, and by the departure of her husband for temporary or permanent purposes the maintenance and support of the family devolved upon the wife, and she was entitled to the exemption as the head of the

and as in finding the law applicable to the case before us. The case of Carpentier v. Bresnahan, 62 Mich. 360, 28 N. W. 916, is somewhat instructive as to the law in such cases. That was where executions were issued on judgments against the husband, and he, in consideration of the return to him of a small portion of the goods levied upon, to be used in his family, released by writing "all exemption and right of exemption which I have or may be entitled to in and to said stock under the laws of the state of Michigan." Afterwards the debtor and his wife joined in a writ of replevin of certain of the property, and it appeared on the trial that the wife did not know of or consent to the making of the paper signed by her husband, nor did she waive an appraisal or setting out of the statutory exemptions of $250 in said stock in trade, which seems to have been required by the exemption laws of Michigan. It was held: "Where a man releases his exemption right in a stock of groceries to his execution creditors, his wife cannot recover on the ground that she has rights therein which cannot be barred without her consent." In the opinion by Judge Morse it is said: "The replevin suit was instituted upon the theory that the husband could not waive this exemption without the consent of his wife, and the court below so held. * * * The court below was in error in instructing the jury that the plaintiffs were entitled to recover the exemption. It is admitted by the counsel for the plaintiffs that the husband could have sold or mortgaged the whole of this stock of goods without the consent of his wife, but argued that it cannot be waived as against a creditor, as it would deprive the family of the benefit of the exemption, and work at least a moral fraud upon the rights of the wife. If the husband can sell his entire stock in trade, and put the money in his pocket, or spend it as he may choose, without the consent of his wife, there can be no good reason why he may not pay his debts with it, as that is all the waiver amounts to." The case of Harley v. Procunier (Mich.) 72 N. W. 1099, 40 L. R. A. 150, 69 Am. St. Rep. 546, was a proceeding in replevin by a wife for two cows taken upon a mortgage executed by her husband. The statute of Michigan exempts to each householder, among other property, two cows, and provides, in effect, that any lien thereon should be void unless signed by the wife or the party making such lien. The householder in this instance owned five cows, and the mortgage in question was given upon two of them without the wife joining. The court held that, notwithstanding this statute, the power of selection of the cows to be held as exempt was with the husband, that the giving of a mortgage on two of them amounted to a selection of others as exempt, and that

Digitized by Google

mortgage void, even where the other three cows were already mortgaged.

Neither by the aid of the brief filed by the defendants, nor in any research we have been able to make, have we found any case going so far as the trial court in this case went. The cases cited by the defendants are of no value as suggesting any rule or principle to determine the questions herein involved. For example, Walker v. Walker, 66 N. H. 390, 31 Atl. 14, 27 L. R. A. 799, 49 Am. St. Rep. 616, and Hall v. Harrington (Colo. Sup.) 44 Pac. 365, are cited as sustaining the general proposition that "conveyances of personal property, made by the husband during coverture, for the purpose of defeating his wife's rights, are, as to her, fraudulent and void." Walker v. Walker was where a husband (parted from his wife) endeavored to convey $38,000 of securities to his sons in such a manner as to leave in himself the control and enjoyment of the same during his life, for the purpose of defeating his wife's claim to an interest therein as his widow. The conveyance was without consideration, and was held to have been testamentary in character, and it did not defeat the widow's claim. Hall v. Harrington was where the husband, being sued for divorce and alimony, made a fraudulent conveyance to defeat a judgment for alimony.

It is urged in the same brief that "the statute giving the wife the right to claim the property as exempt when the husband absconds and deserts her is for the benefit of herself and children, not only against the husband's creditors, but as well against him." Unfortunately, no such statute is cited, and we are unable to find any of such import. It is the duty of the court to find, declare, and apply the law, but not to make it. We are not at liberty to measure the legal rights and powers of property owners by our conception of what ought to be made the law by some lawmaking power for application to the facts of some special case. The law as it is must determine the rights of the parties to the action. It is undoubtedly the moral and legal duty of a husband to provide for his wife. It is also the moral and legal duty of the debtor to pay his debts. The Legislature has granted him the right to postpone or subordinate the latter duty to the former, to the extent of withholding from his creditors the property exempted from forced sale. But these exemptions are allowed, not compelled; they are not self-enforcing, but may be waived. Although it is the settled law that an executory contract to waive exemptions connected with the contract creating the debt will be held void as against public policy, yet the debtor may suffer his exempt chattels to be sold under execution when the time for sale has arrived. See Waples on Homestead and Exemptions, p. 540, § 2. It is said further in the same sec- he has, or pawn or pledge him, or subject anything to a chattel mortgage, and thus cut himself off from claiming exemption as to that thing." So long as the Legislature has seen fit to restrict only the husband's power to sell or pledge his house and household goods, we are unable to discover any principle of law which we can apply to prevent the plaintiff from taking the security it did, even to the extent of securing a further advance demanded as a condition of securing the pre-existing debt. If it had a right to do so, the knowledge that the wife would not allow the debt to be made out of the property in the absence of an enforceable lien thereon could not destroy the right to obtain such a lien. The wife took the course she had a right to take, and the dismissal of the attachment suit resulted; but that did not bind the bank to forego any lawful means of securing the payment of the debt due to it. If, because of her course, they were compelled to increase the amount of their claim in order to secure its payment, she cannot complain, unless they violated some legal right belonging to her by so doing.

We can find no law holding that this corn which Mr. Foss left standing in the field when he went away became the property of his wife because of his leaving, nor any law destroying his power to deal with it as his own. If he had sold it before he left, and taken the money with him, or paid his debts with it, the purchaser would have had a good title; and the court is powerless to enact that his ownership of and powers over the property were destroyed by his leaving. The action of John D. Foss in deserting his wife under the circumstances, notwithstanding the meed of excuse she seemed willing to award him, was most reprehensible. Evidently her conduct caused, but, considering her condition, could not justify, his leaving her. But it was in no sense the fault of his creditors, and did not change any of their legal rights. If, then, the plaintiff bank had the legal right to take their lien, knowing that they could not make their claim out of the property without such lien—as we think they had—it follows that their action in doing so was not a fraud upon Mrs. Foss, any more than her insisting on her right to prevent the sale of the property without such lien was a fraud upon her husband's creditors. Undoubtedly, Mrs. Foss could have used any of the property left by her husband to supply any present need, even to the extent of selling it, and using the money upon the theory of agency, just as she could bind her husband for any debt contracted for that purpose; but we cannot hold that the husband's title was divested by his absconding. The trial court erred in instructing a verdict for defendants.

We recommend that the verdict rendered by direction of the trial court be set aside,

Digitized by Google

use remanded for further proceedings in ac-
rd with the holdings herein announced.

ALBERT and BARNES, CC., concur.

PER CURIAM. The conclusions reached
y the Commissioners are approved, and, it
ppearing that the adoption of the recom-
endations made will result in a right deci-
ion of the cause, it is ordered that the ver-
ict rendered in the trial court be set aside,
udgment based thereon reversed, and the
ause remanded for further proceedings in ac-
ord with the holdings herein announced.

CROUCH et al. v. PYLE et al.

(Supreme Court of Nebraska. Oct. 7, 1903.)

COUNTY COMMISSIONERS—ALLOWANCE OF CLAIMS—REVIEW.

1. The board of county commissioners, in allowing claims made for salaries of county officers, and other claims against the county, where the amounts to be allowed therefor are fixed by law, and where no judicial inquiry is required to determine the amount, acts in a mere ministerial capacity, and has no power or jurisdiction to allow an amount in excess of the fixed statutory compensation.

2. Where judicial discretion is called for in the allowance of a claim presented, the board then acts as any other judicial body, and its findings can be questioned and set aside only by an appeal taken from the decision as provided by statute. Neither can the members of the board be made liable for a mere mistake made in passing judgment on the claim, the commissioners in such case being entitled to the same immunity as other judicial officers.

(Syllabus by the Court.)

Commissioners' Opinion. Department No. 3. Error to District Court, Pawnee County; Stull, Judge.

Action by Liberty B. Crouch and others against W. Marion Pyle and others. Judgment for defendants, and plaintiffs bring error. Affirmed.

E. O. Kretsinger, for plaintiffs in error. Story & Story, for defendants in error.

DUFFIE, C. In December, 1895, A. E. & J. N. Hassler, proprietors of the Pawnee Republican, entered into a contract with the board of county commissioners of Pawnee county by which they were to publish the delinquent tax list for 1895 in the Pawnee Republican, and also cause it to be published in the Pawnee Press, for the sum of 20 cents for each description of land other than town lots, and for each town lot included in the delinquent tax list the sum of 10 cents. The proceedings of the board of county commissioners and all printing required by law to be published by the county during the year 1896 were to be published without cost in consideration of the award to them of the publication of the delinquent tax list. October 1, 1896, the county treasurer furnished these publishers a delinquent tax list for

had been advertising delinque
giving the amount of the tax
preceding year only, but an ex
the delinquent tax lists publisl
counties led him to believe that
correct, and after consultation
more attorneys—among others,
attorney—he prepared the delinq
1895 by describing the lands ar
as many times as there were
quent taxes due against the sar
method many of the descriptions
of town lots were repeated 20 or
according to the number of
standing against the same; and
publishing this delinquent list,
of 20 cents for each parcel of l
cents for each town lot, amou
113.80, whereas, if each tract of la
town lot had been set forth
said publication, with the full
taxes due against the same,
would have been but $313.90.
presented to the board of cour
sioners for the amount first ab
which was audited and allowed b
and warrants drawn and issued
of said bill. It is agreed that no
ever taken from the order of t
sioners allowing said claim, and
was taken thereon until a short
to the commencement of this sui
plaintiffs in error petitioned th
county commissioners to take a
cover the amount claimed to ha
legally paid for the publication
linquent list. No attention having
to said petition, plaintiffs in
menced this action, making the c
ers who allowed said bill and t
men and the county of Pawr
defendant, and asking that the an
leged to have been illegally allowe
might be recovered from said con
and their bondsmen for the use
of the county. The district court
the plaintiffs' petition, overruled
for a new trial, and entered judgm
the plaintiffs in error for costs, ar
is now here on petition in error.

Several preliminary matters, su
fect of parties plaintiff, a defect
defendant, and a misjoinder of ca
tion, are urged by the defendant
but these matters we do not ca
cuss, as we have concluded tha
presented by the testimony, wh
great difficulty and open to grave
was correctly determined by t
court. It is alleged in the petitio
county commissioners, when the
and allowed the account for publ
delinquent list, well knew that
was illegal, extortionate, and u
that they had no legal authority
to pay for printing the same in ex
sum of $313.90, and that the com

Digitized by Google

ers of the newspaper with the unlawful and corrupt purpose of cheating and defrauding the county of Pawnee and its taxpayers out of the sum of $799.90.

If there was evidence in the record to support these allegations of fraud and conspiracy on the part of the defendants in error, they would, no doubt, be liable to the county for any amount allowed in excess of the legal fees; but a critical examination of the record fails to show any dishonest motive on the part of any of the defendants, or to disclose that they were not acting honestly in the allowance of this claim. The proprietors of the Pawnee Republican were obligated by contract to publish the tax list in question. This list, of necessity, came from the county treasurer; and the publishers had nothing to do with making it out, or in directing its form. The treasurer was the agent of the county to furnish the copy, and it was not for the publishers to question the correctness of the form. They were to publish it as furnished, and might rely with confidence upon the officer charged with the duty of preparing it doing so in the proper manner and form. When published, they presented their bill to the board of county commissioners. This was undoubtedly a claim which had to be audited and allowed, under the provisions of section 2118 of the Compiled Statutes of 1901. That the claim should be audited and allowed by the county board is conceded by the plaintiffs in error, but it is insisted that as the amount to be allowed was fixed by law at 20 cents for each description of land, and 10 cents for each town lot, the board acted ministerially, and are liable to the county for any amount allowed in excess of the legal rate. In Kemerer v. State, 7 Neb. 130, it is said: "Where the compensation for services rendered for the county is definitely fixed by law, the audit of the same and drawing a warrant therefor by the board are ministerial duties, unattended with the exercise of any official discretion, and therefore in such case the board cannot make such compensation any greater nor any less than that fixed by law." This case has received the approval of this court in subsequent cases. State v. Roderick, 25 Neb. 629, 41 N. W. 404; County of Logan v. Doan, 34 Neb. 104, 51 N. W. 598; Hazelet v. Holt County, 51 Neb. 716–723, 71 N. W. 717; Perkins County v. Keith County, 58 Neb. 323, 78 N. W. 630. These cases, however, all refer to claims made against the county by officers for salaries or for fees, the amount of which was definitely fixed by statute, excepting Perkins County v. Keith County, in which the claim had been once audited and allowed by the board, and in which it was held that a second presentation of the claim was unnecessary. It is true that Heald v. Polk County, 46 Neb. 28, 64 N. W. 376, while recognizing and affirming the rule announced in Kemerer v. State, supra, apparently establishes a different rule so far as it recognizes the allowance by the board of a claim made by the clerk for $20 for making out a tax list; and, while it is attempted to distinguish the case from Kemerer v. State, we concede that the distinction made is not entirely clear to our minds. The true rule, we believe, is to inquire whether the board, in passing upon a claim, acts in a ministerial or judicial capacity. Where the compensation is fixed by law, and no judicial inquiry is necessary to determine the amount—cases such as the allowance of the quarter salaries due the officers of the county—there can be no question that the board is acting in a ministerial capacity, having no discretion to use, no judicial powers to exercise. Where, however, a claim is presented for services performed under a contract fixing the remuneration, or at the request of the county through its properly authorized agent, where compensation has not been agreed upon, or where damages are claimed against the county for some act committed, then the account must be audited, and the discretion of the board exercised to determine whether the work done is in accordance with the contract; what the value of the services may be, if no value has been agreed upon; what the damages sustained amount to, where damages are claimed; and in all such cases the board is acting judicially, and, like other judicial bodies, can be called to account only upon a showing that its acts were willfully illegal and corrupt. In the case at bar the commissioners had to examine and pass upon this claim, the same as on any other claim for legal printing done for the county. In other cases, unless the statute prescribes the form of the notice or other legal matter required to be published, the officer from whose office it emanates prepares the form for the publisher, who prints it as furnished. We do not think that it can reasonably be claimed that, after the allowance and payment of a bill for such printing, a taxpayer who failed to make any objection to the allowance of the bill on the ground that the notice was more lengthy than required could maintain an action on behalf of the county to recover, either from the publisher, or the commissioners who allowed the bill, the amount which he claims was excessively paid, on account of the notice being of greater length than was necessary. Certainly in such case no action could be maintained in the absence of a showing that the parties acted corruptly, and extended the length of the published matter for the purpose of defrauding the county. Such a case does not differ greatly from the one we are considering. The form of notice of the sale of lands for delinquent taxes is not given by statute; the Legislature contenting itself with naming the several matters that the notice must contain, leaving to the treasurer the duty of formulating the notice in his own way. In such cases common fair dealing requires that

he publisher who in good faith publishes he notice for the requisite time should be aid for his work, and the commissioners, who audit and allow the bill, and against whom no evidence of bad faith exists, ought ot to be held liable for so doing. The principle involved is not greatly different from hat applied in Brown v. Merrick County, 18 Neb. 355–360, 25 N. W. 356.

We are satisfied that the judgment appealed from was the only judgment that ould be entered in the case, and therefore ecommend its affirmance.

KIRKPATRICK and POUND, CC., concur.

PER CURIAM. For the reasons stated in the foregoing opinion, the judgment appealed from is affirmed.

COCHRAN et al. v. PHILADELPHIA MORTGAGE & TRUST CO.

(Supreme Court of Nebraska. Oct. 7, 1903.)

NEW TRIAL—NOTICE—LEASE—NOTICE TO QUIT —ACTION OF DETENTION—WAIVER OF FORFEITURE—EVIDENCE.

1. A failure to give one day's notice in writing of the hearing on a motion for a new trial, as provided for in the rules governing the district court of Douglas county, will not ipso facto render the ruling of the trial court on such motion erroneous, requiring the reversal of the judgment; but in this court the inquiry will be whether the trial court should have allowed or denied the motion.

2. Under a lease containing the provision that if the rent, or any part thereof, shall be in arrears and unpaid at any time, it shall be lawful for the landlord to retake possession without any formal notice, a right to maintain an action of detention accrues after default and statutory notice to the tenant.

3. A tenant who held possession of the premises under a lease providing for the payment of $15 rental, payable on the 12th day of each month in advance, was 13 months in default. He sent a check for $15 by mail to the agent of the landlord, unaccompanied by letter of explanation or instruction, and in abbreviated terms on the face of the check wrote, "1 mo. rent, 1021 S. 36 St. to Apl. 25, '02." The check was cashed, and the money applied on the past-due rent. In an action to dispossess the tenant, commenced before the expiration of the period indicated on the face of the check, *held*, that the acceptance and retention by the landlord of the check did not waive the forfeiture, in the absence of a showing that the landlord or his agent received the check with actual knowledge of the proposed limitation in its application.

4. Evidence examined, and *held*, that a peremptory instruction for plaintiff was properly given.

(Syllabus by the Court.)

Commissioners' Opinion. Department No. 1. Error to District Court, Douglas County; Stubbs, Judge.

Action by the Philadelphia Mortgage & Trust Company against Charlotte A. Cochran and others. Judgment for plaintiff, and defendants bring error. Affirmed.

J. L. Kaley and H. E. Cochran, for plaintiffs in error. Wharton & Baird & Sons, for defendant in error.

KIRKPATRICK, C. On Ma
Philadelphia Mortgage & Tru
defendant in error, filed in the
of Douglas county its complaint
of detention brought to recover
certain premises owned by it i
Omaha; plaintiffs in error, who
thereof, being made defendant
plaint was in the ordinary fo
ownership, the possession of th
at an agreed rental of $15 per
able on the 12th of each mon
fault from March 12, 1901, to A
service of notice to quit and den
session, with prayer for judgi
was judgment for defendant i
the cause was removed to the d
where there was a trial to the
jury. After hearing the evidenc
on motion of defendant in erro
the jury to return a verdict for i
tion for a new trial being ov
cause is presented to this court fo

It is shown by the record that
error originally went into posse
premises under a lease dated
1899, which provided for a re
payable monthly in advance on
of each month. The lease cont
vision that in default of paymer
accordance with the terms of
should be lawful for the lessor c
without formal notice or demand
and take possession. It appears
ants were in default for many
various attempts were made to
rent due, and finally this actio
tuted. Defendant in error dealt
tiffs in error through its agen
Love Company. Other facts wil
the consideration of the several re
why the judgment should be rev

It is made to appear that at t
motion for a new trial was rule
trial court plaintiffs in error wer
ent in court either in person or b
and that no notice was served on
the time when the motion woul
for hearing, in seeming contraven
tions 2 and 3 of the rules of the di
of Douglas county, which are m
of this bill of exceptions, providi
day's notice in writing of the he
motion. Counsel for plaintiffs in
tend that in this action of the
there is such error as requires the
the judgment, without further in
the merits of the case made. O
trary, we think the judgment car
versed for this reason alone. The
and enforcement of rules for the
business is an inherent power of
of general jurisdiction (Andres v.
Neb. 535, 68 N. W. 938), and while,
the rules referred to are of great i
and convenience to litigants and c
do not think that their strict obs
acting upon a motion for a new

Digitized by Google

pose of a motion for a new trial is to give the trial court an opportunity to review its own proceedings and to correct its own errors. If the trial court, which has heard the evidence, chooses to rule on the motion without the presence of the applicant, or the assistance that may be rendered in argument of the motion, it would seem that complete justice could be done by presenting the cause on error to this court, where error in the ruling on the motion may be corrected. It would seem to be a vain thing to reverse a judgment because of a ruling otherwise right, merely on the ground that the trial court failed to give an opportunity for argument. We decline, therefore, to sustain the first contention of plaintiffs in error, and will take up for consideration their second contention.

Complaint is made of the insufficiency of the notice to vacate the premises served on plaintiffs in error prior to the commencement of this action. This notice was served on April 16, 1902, and this action was commenced May 5, 1902. The contention made is that section 1021, Ann. Code 1901, defining a tenant holding over his term as one who "has failed, neglected or refused to pay the rent or any part thereof, when the same was due," is unconstitutional, being in contravention of section 11, art. 3, of the Constitution, the subject of the act being broader than its title, and the amendment of 1875 not being germane to the original section. Proceeding upon the theory that this section is unconstitutional, plaintiffs in error contend that mere failure to pay the rent does not make the holding unlawful, or a holding over the term, and that the right to terminate the tenancy must be determined by the language of the lease. The lease contained a provision as follows: "That if such rent or any part thereof shall at any time be in arrears or unpaid, * * * then * * * it shall be lawful for the party of the first part, * * * without any formal notice or demand, to enter into and upon said premises peaceably to hold and enjoy," etc. Thus it appears that under the lease, with reference to the provisions of section 1021, Ann. Code 1901, the defendant in error had a right to reenter in the event of default in payment of rent. The notice given was reasonable, and it would seem that the right to maintain this action cannot be doubted.

Whether there was a default at the time of the notice and the commencement of this action is the next question for consideration, and is involved in the question whether there was error in directing a verdict for defendant in error. It is contended that there was at least one material question in dispute under the evidence, requiring submission to the jury. It appears that before the notice to quit was served the plaintiffs in error had sent to the agent of defendant in error a check for $15, which appears in the record as follows: "Omaha, Mar. 25, 1902. to the order of Brennan Love Co. Fifteen and No/100 Dollars. 1 Mo. rent. 1021 S 36 St. to Apl. 25, '02. H. E. Cochran." There was an effort made by defendant in error at the trial to show that this notation on the check was not there at the time of its receipt, but was put on afterwards. Inasmuch as the case was taken from the jury, this disputed question must be resolved in favor of plaintiffs in error, and the inquiry accordingly is whether the receipt and retention of this check constituted a new contract covering the period designated on the face of the check, so that during that period plaintiffs in error were not in default. Such is the contention now made. H. E. Cochran testified that he wrote the check; that at the time he was in default for 12 months' rent; that he was well aware of this long default; that his purpose in putting the notation on the check was that, if it were accepted, there would be no default during that period. His evidence also shows that many efforts were made by defendant in error, through its agent, to collect the delinquent rent, and that he had from time to time paid sums ranging from $164 to $5; and that in sending this check he did so by mail, inclosing it in an envelope, without any letter of explanation or instruction. The testimony of defendant in error shows that the check was received in the ordinary course of business, was handled alone by a young woman in charge of that department, was cashed, and the amount thereof applied on the account against plaintiffs in error. It is now contended that the acceptance and retention of this check, with its notation, has the effect not only to waive any prior forfeiture, but to create a new tenancy commencing and ending on a different day of the month, plaintiffs in error invoking the rule that by the acceptance of rent the landlord waives a prior forfeiture, and that the debtor has the right to dictate the application to be made of a payment. Both rules are well settled, but we do not think plaintiffs in error are in a position to be benefited by their application. Cochran does not claim that he directed the amount to be applied in payment of rent for the current month, but the notation itself shows an effort or intention to carve out a new month commencing on the 25th, a date entirely unknown to the existing and recognized tenancy. Whatever the holding might be if the tenant in express terms brought to the attention of the landlord, directs that the amount of one month's rent tendered be applied on the last or current month under the lease, and upon no other, and the amount is accepted, it would be clearly unreasonable to hold that such a notation upon a check could abrogate the contractual relations of the parties as existing, and create a new tenancy upon different terms. But it is manifest to us that the placing of this nota-

agent of defendant in error. Under Cochran's own testimony it amounted to his saying, "I am in default for twelve months' rent, but by means of this check, without letter of explanation or any act to challenge attention to what I am doing, I will limit the application of the amount to the present month." There is nothing in the evidence to indicate that this payment would have been received upon the express condition, brought to the notice of defendant in error, that it was to apply otherwise than on the large indebtedness already past due. While, doubtless, a notation on a check, stating the purpose for which it is sent, may be notice to the payee, checks are not intended to be used as a means of creating contracts; and, should it be held that the drawer of a check may by abbreviated notations thereon, entirely foreign to the legitimate functions of such an instrument, change or abrogate existing contracts, checks would become dangerous to the commercial world, whereby the payee might be drawn into a pitfall, and lose valuable rights. The one case cited and relied on by plaintiffs in error is, we think, sufficient to indicate what the holding herein ought to be. Prindle v. Anderson, 19 Wend. 391. Our understanding of that decision is that it is only when the landlord knowingly receives the payment, being aware of the conditions under which the tenant tenders it, that he will be held to have waived the forfeiture. In the case at bar it is apparent that no contract for a new tenancy covering the month indicated in the check was ever in fact made, and we are of opinion that, in the absence of a showing that the notation on the check in question was brought to the actual knowledge of the landlord or his agent, its application upon the past-due rent, and not for the period indicated, was within the right of defendant in error, and that there was no waiver, plaintiffs in error being in default at the time of the commencement of this action.

The verdict for defendant in error was properly directed. It is therefore recommended that the judgment be affirmed.

DUFFIE and POUND, CC., concur.

PER CURIAM. For the reasons stated in the foregoing opinion, the judgment of the district court is affirmed.

FRONK v. J. H. EVANS CITY STEAM LAUNDRY.

(Supreme Court of Nebraska. Oct. 7, 1903.)

TRIAL—DISMISSAL—INJURY TO EMPLOYÉ—DANGER—FAILURE TO WARN SERVANT.

1. Where a case has been submitted upon a demurrer to the evidence, plaintiff's absolute employer, based on the ground of negligence in not informing the employé of the danger attending the operation of a machine, and instructing her how to avoid injury thereby, it must appear that the injury complained of occurred because of the want of such instruction. If it fairly appears that the injury complained of did not occur from want of knowledge of how the machine should be operated, but was incurred from causes which could not be foreseen or anticipated, it cannot be imputed to the neglect of the master to give proper instructions.

3. Whether a guard rail attached to a mangle for the purpose of protecting the hand of the operator from being caught and drawn into the machine was properly attached and placed in position is a question for the jury, under the evidence.

(Syllabus by the Court.)

Commissioners' Opinion. Department No. 3. Error to District Court, Douglas County; Estelle, Judge.

Action by Maggie Fronk against the J. H. Evans City Steam Laundry. Judgment for defendant, and plaintiff brings error. Reversed.

Smyth & Smith, for plaintiff in error. Greene, Breckenridge & Kinsler, for defendant in error.

DUFFIE, C. The plaintiff in error is a minor of the age of 15 years, and brought this action by her father as her next friend. On May 5, 1902, she was employed by the defendant in error, and placed in charge of the forewoman, with instructions to put her to work. The first work assigned her was that of laying out wet clothes. She continued in this employment on Monday and Tuesday, and on Wednesday the forewoman put her to work feeding a machine called a "mangle," which is used for ironing clothes. This mangle is operated by steam, and consists, as we understand, of four large rollers, which revolve over a heated steam chest. It is about eight feet wide. It has a table in front, which is covered with a brass sheet. Above this table, and running the entire length of the machine, is a guard. Between the guard and the table is the aperture through which the clothes are fed to the machine. The rollers revolving toward the operator take hold of the clothes, and pull them through to the other end, thus drying and smoothing them. The purpose of the guard is to prevent the hand of the operator from being dragged between the roller and the heated steam chest. It is adjustable, and can be raised or lowered by the engineer; but, as we gather from the record, the operator has nothing to do with its adjustment. On Thursday afternoon, a day and a half after plaintiff commenced to work on the machine, her right hand was caught in a double roller towel which she was passing through the machine, and dragged under the guard and between the steam chest and the roller, and there crushed and burned so as to render ampu

¶ 1. See Dismissal and Nonsuit, vol. 17, Cent. Dig. §§ 15, 16.

Digitized by Google

time of the accident she was standing at the right or east end of the machine. At that time the guard at the left or west end of the machine was about one-half inch above the table, and at the east end, where plaintiff was working, the evidence tends to show that the guard was from an inch to an inch and a half above the table. The evidence also tends to show that no article was fed to the machine thicker than a double towel, and that it was not necessary that the guard should be placed more than from one-eighth to a half inch above the table. The petition alleges negligence on the part of the defendant in error in two particulars: (1) In not instructing plaintiff how to perform the duties of the employment in which she was engaged at the time of the injury; (2) in the adjustment of the guard on the machine in which plaintiff was injured. At the close of the plaintiff's testimony the court, on motion of defendant, instructed the jury to return a verdict for the defendant.

The motion to direct a verdict was apparently argued at length, and, upon the court announcing its intention to direct a verdict for the defendant, the plaintiff moved to dismiss without prejudice. This was denied, and is now alleged as error. Plaintiff, in her brief, cites authorities to the effect that there can be no final submission of the case to the jury until all questions of law have been disposed of by the court, instructions and papers pertaining to the case actually delivered to the jury, and they are authorized, without further interposition or control of the court, to proceed to a judicial examination of the issues submitted to them. In view of the holding of this court in Bee Building Co. v. Dalton, 93 N. W. 930, it is not necessary to spend time on that branch of the case. It is there said: "When a case has been submitted upon demurrer to the evidence, plaintiff's absolute right to dismiss without prejudice is lost. * * * To permit a party to dismiss under such circumstances is, in substance, to grant him a new trial after he has been fairly defeated, and to deprive his adversary of the fruits of a fairly won victory. It is contrary to good sense and sound policy to allow a party to take his case from one court to another until fortune favors him with a judge who is willing to accept his view of the law or his construction of the evidence."

Neither do we think that the plaintiff's contention that the defendant's failure to instruct her how to perform the duties of her employment, and to give her warning of danger to be apprehended from the operation of the machine, can be used to work a reversal of this case. Plaintiff's own testimony is to the effect that she watched the other girls at work upon the machine, and that she fed it just as they did; and, in answer to a question as to how her hand got caught, she said: "All I know, I was feeding that towel. I and the thumb got wound some way in the towel, and pulled it right in with the towel. That is all of it." The following is a part of her examination: "Q. Your hand got wrapped up in some way or other in the towel, and you could not get it out? A. Yes, sir. Q. And this time you did not have hold of the towel as you usually did? A. No, sir. Q. Nor the way Miss Black usually did? A. No, sir. Q. You did not have hold of it the way she usually fed it, that time? A. No, sir. Q. If your hand had not got tangled in the towel, you could have taken it away, couldn't you? A. Yes, sir. Q. And you would not have been hurt, would you? A. No, sir. Q. So that it was not any lack of knowledge on your part that kept you from taking your hand away, was it? A. Why, I don't know. Q. Was it because you did not know, or was it because the towel held you, that you did not take your hand away? A. It was because the towel held my hand in it. Q. So, if the towel had not held you, what you knew about the machine would have permitted you to take your hand away, wouldn't it? A. Yes, sir." It is evident from this examination of the plaintiff herself that it was not lack of knowledge on her part as to how the machine should be fed that caused the injury, and any information or instruction which might have been given her of the manner of feeding the machine could not in the least tend to obviate the injury which she received. The law does not cast upon the employer the burden of anticipating an accident of a particular kind, nor, as in the case at bar, of foreseeing how it might happen that the thumb of one of his employés might become entangled in a torn towel and drawn into the mangle. The plaintiff herself has stated repeatedly that she did not know how her thumb became entangled, and, if she does not know, the law is not so unreasonable as to cast upon the employer the duty of telling her in advance how to avoid an occurrence which she cannot explain after it has taken place. We are clear that plaintiff has not established any fact which tends to show that the injury occurred through the neglect of the defendant to instruct her in the operation of the machine.

Passing now to the complaint made that the guard was improperly adjusted, we are of the opinion that this was a question which should have been submitted to the jury. It appears without contradiction that the guard was placed on the machine for the sole purpose of protecting the operator, and of keeping her hand from coming in contact with the rollers. As before stated, the evidence tends to show that the space of one-quarter to one-half inch was sufficient through which to feed any of the clothes that were passed through this mangle. If there had been no guard, the danger of feeding the mangle would have been apparent to the operator.

Digitized by Google

he employment. As said by the Supreme Court of Oregon in Stager v. Troy Laundry Company, 63 Pac. 645, 53 L. R. A. 459—a case very similar to the one under consideration: "The authorities appear to be uniform and conclusive that, where a machine similar to the Wendall Annihilator in principle is operated without a guard plate, the operator assumes the risk, for in such case the method of operation is known, and the peril patent. In the case at bar there was a guard plate, which was evidently designed to lessen, if not to obviate, the danger incident to feeding fabrics within the aperture between the rollers, and, if properly adjusted, would, no doubt, have afforded some protection, and it was the duty of the master to see that it was properly adjusted." In Swift & Co. v. Holoubeck, 60 Neb. 784, 84 N. W. 249, the contention of the plaintiff was that a certain shield was improperly and negligently constructed, and was attached to the machine in such a manner as to make the space between the knives and the revolving drum an inch or more, and sufficient to permit the hand to pass into the rapidly revolving knives, when the proper construction would have allowed but an eighth to a quarter of an inch space, and thus prevented the possibility of the happening of the injury. In the opinion it is said: "The shield was evidently for the purpose of protecting the operators of the machine from contact with the revolving knives, and, under plaintiff's theory, should be placed so near the drum as not to permit the hand to slip thereunder and against the knives or scrapers. * * * The issue we regard as purely one of fact, and upon which there is a conflict of the evidence, rendering the question one properly in the province of the jury for its determination." The same views were expressed by the court on a re-examination of the case, the opinion being found in 62 Neb. 31, 86 N. W. 900; and these cases, we think, are an authoritative declaration that where the master has placed a guard to protect his employé, and to prevent his hand from being drawn into the machine, and where the guard, when properly placed, will have this effect, or will tend to prevent accidents, it is his duty to see that the guard is properly adjusted, and whether it be so or not is a question for the consideration of the jury.

We think, therefore, that the court erred in not submitting the question of the proper adjustment of the guard to the jury; and for this error we recommend a reversal of the judgment, and that the case be remanded for another trial.

POUND, C., concurs.

KIRKPATRICK, C. I concur in the result, but not in the rule announced in paragraph 2 of the syllabus.

district court is reversed, and the case remanded for another trial.

AMERICAN HARROW CO. v. DEYO (CURRY, Intervener).

(Supreme Court of Michigan. Nov. 3, 1903.)

CONDITIONAL SALE OR MORTGAGE.

1. Plaintiff agreed to manufacture and deliver machines to defendant at certain prices, defendant to have the right to sell them at retail, he to pay therefor at specified times, it being stipulated that title should remain in plaintiff till the purchase price was paid, and that, if at any time plaintiff should deem itself insecure, it could declare the indebtedness, and take possession of the goods. *Held*, that title remained in plaintiff, and did not pass to defendant, with mortgage back, though, after trouble arose, plaintiff filed the contract in the township clerk's office; this not alone changing the character of the instrument.

Error to Circuit Court, Genesee County; Charles H. Wisner, Judge.

Action by the American Harrow Company against Parden W. Deyo. James L. Curry, trustee, intervened. Judgment for defendants. Plaintiff brings error. Reversed.

Plaintiff is engaged in the manufacture and sale of hardware and agricultural implements in the city of Detroit. Defendant was engaged in the hardware and implement business in the village of Clio, Genesee county. On October 31, 1901, the parties made a contract defining the terms and conditions by which the plaintiff was to deliver goods to defendant for sale. The material parts of that contract read as follows: Said first party agrees: "(1) That it will between January 1st, 1902, and October 1st, 1902, manufacture for and deliver to said second party on board cars at Detroit the goods designated at the prices and terms, and in the quantities specified, on pages 4, 5, 6, 7, 8, 9, and 10, herein, which are made a part hereof. (2) To give second party the right to sell said goods in the natural course of retail trade, during the season of 1902, in the following territory and trade tributary thereto, viz.: Clio, Michigan. (3) That its goods shall be well made and of good material." Said second party agrees: "(1) To purchase said goods of first party and pay it therefor the price agreed upon, at the time, and according to the terms indicated. (2) To receive said goods, to pay all freight and charges thereon, to take proper care thereof, and to permit none to be lost, injured or destroyed until fully paid for. (3) To make the best endeavors to sell all goods possible in the territory designated and to order from first party such additional goods as the trade demands. All subsequent orders to be subject to the same terms and conditions as mentioned herein. (4) That the title to and the ownership of the said goods and of all other goods hereafter ordered, and to the

Digitized by Google

endant was followed by judgment, and the plaintiff has again brought error. The points now raised relate to the question of plaintiff's bona fides in the purchase of the bonds. The proof upon the later trial was much the same as upon the former; the only substantial difference being that it was shown upon the later trial that the plaintiff and his copartner had before them upon the day that the bonds were purchased the proceedings of the common council providing for the submission to the people of the city of the question of the raising of money for park purposes, and the payment some 17 days later of the last $500 of the purchase price, at which time they received a written guaranty of payment of said bonds from Chandler, the person who negotiated them. It is claimed by the defendant that these facts, together with others proved, which were the same as upon the former record, entitled defendant to have the question of plaintiff's bona fides submitted to the jury. The court was of that opinion, and instructed the jury that the plaintiff and his copartner did not rely solely upon the recitals of the bonds, for the reason that they relied in part upon the statements of Chandler and the letter of the prosecuting attorney, and that, if they should find that the plaintiffs did not rely solely upon the recitals of the bond, the verdict should be for the defendant. The plaintiff's counsel contend that this was error, and that, under the testimony, the court should have directed a verdict for the plaintiff. We think that the court erred in instructing the jury that the plaintiffs were not bona fide purchasers if they did not rely solely upon the recitals in the bonds. It was equivalent to saying that any reliance on additional evidence of the validity of a bond would deprive the purchaser of the benefit of the recital. Such a rule would put a premium upon omission to inquire further. In this case the plaintiff and his copartner examined the confirmatory evidence, viz., the letter and the proceedings of the council, and were thereby encouraged to part with $2,200 of their money for the bonds. Subsequently they took a guaranty of payment from Chandler, at which time they paid the remaining $500 of the purchase price. There is no evidence in the case which justifies the conclusion that the plaintiffs did not act upon the honest belief that the bonds were what they appeared to be, viz., park bonds. We have no means of knowing how they were led to take a guaranty. It may have been offered, or it may have been required, but the fact cannot be said to imply a notice or cause for distrust. See the case of Davis v. Seeley, 71 Mich. 220, 38 N. W. 901, and cases there cited.

The testimony in relation to the understanding of the aldermen in regard to the effect of the directions on the envelope in which the deposited bonds were contained

It was immaterial whether or not Seeley had put his factory in operation before the bonds were delivered to him by Chandler.

Counsel for the plaintiff ask that we enter judgment here for his client. We are unaware of a precedent for such practice upon reversal of a case not based upon findings or a verdict. See the recent case of Central Savings Bank v. O'Connor (Mich.) 94 N. W. 11.

The judgment is reversed, and a new trial ordered. The other Justices concurred.

POKREFKY v. DETROIT FIREMEN'S FUND ASS'N.

(Supreme Court of Michigan. Nov. 3, 1903.)

BENEFICIAL ASSOCIATIONS—AMENDMENT TO BY-LAWS—MODIFICATION OF BENEFITS —ASSENT OF INSURED.

1. Decedent was a member of a beneficiary association. After decedent became a member, the trustees adopted an amendment to the by-laws, changing the schedule of benefits, increasing the sick benefits, decreasing the death benefits, and increasing the membership dues. Decedent paid his assessments and increased dues without protest. He also stated to a member that he was satisfied with the changes made. *Held*, that the question whether decedent assented to the change and was bound thereby was for the jury.

On motion for rehearing. Motion denied.

For former opinion, see 90 N. W. 689.

HOOKER, C. J. The plaintiff brought an action, as guardian for her minor child and in her own right, against the defendant, to recover a benefit on the life of her deceased husband. At the time he joined the defendant association, viz., July 9, 1890, sections 3 and 4 of the by-laws provided:

"Sec. 3. Upon the death of any active or retired member of the association there shall be collected from each surviving active or retired member thereof, the sum of five dollars, said amount to be paid on or before the second pay day of the fire department after the death of said member; and in default of said payment the secretary shall strike the name of the defaulting member from the rolls of the association; provided, however, that the board of trustees of the association may extend the time for such payment.

"Sec. 4. Upon the death of any active or retired member of this association there shall be paid within ninety days, to the person or persons (to be designated by said member) named in the instrument on file in the office of the secretary, the entire amounts collected under section 3, article 8."

Plaintiff's husband died on November 18, 1896, at which time there were 346 members in the association, and she claims that she was entitled to receive the sum of $1,730. The association paid $1,500, and refused to pay more, basing such claim upon the ground that "prior to Pokrefky's death section 4 of

Digitized by Google

article 8 had been amended to read as follows: "Upon the death of any member or retired member of this association, there shall be paid, within ninety days, to the person or persons (to be designated by said member) named in the instrument on file in the office of the secretary, the sum of fifteen hundred dollars, under section 3, article 8." This action was brought for the remainder.

The defendant is a charitable association incorporated in 1867, under Act No. 20, p. 28, Laws 1855, being section 8264 et seq., Miller's Comp. Laws 1897. The articles of association provided that the society "may provide for the widows and orphans of deceased members, and the payment of such sum as may be prescribed by the by-laws of such association." "We, the undersigned, members of the paid fire department of the city of Detroit, faithfully promise and agree to support the foregoing constitution and by-laws, and to act in accordance with the requirements contained therein, so long as they shall continue in force, and while we retain our membership in the association." The cause was before this court on a former occasion (see 121 Mich. 456, 80 N. W. 240), a verdict having been directed for the defendant. It was then held that the amendment could not have the effect of changing the pre-existing contract. Upon a second trial the defendant claimed that the deceased assented to the change in the by-laws, and therefore to a corresponding change in his contract of insurance. The question was left to the jury, and a verdict was found in its favor, and a judgment upon the verdict was affirmed. See 90 N. W. 689. The case is now before us upon rehearing, and the only question is whether the trial court erred in submitting the cause to the jury and upon the question of assent.

The following are the amendments in full:

"Art. 4. There shall be paid monthly, in advance, by each member of the association (not an honorary member), to the secretary thereof, the sum of one dollar ($1.00), and in default thereof the secretary shall strike the name of each member from the roll of the association."

"Section 1, art. 8. Any member of this association who shall receive any injury, or who may become sick, so as to incapacitate him from attending to his duties shall, by applying to the sick and visiting committee, and upon recommendation of said committee, receive relief as follows: For accident, five dollars ($5.00) per week; for sickness, ten dollars ($10.00) per week; and no relief shall be granted for a period of less than one week.

"Section 3, art. 8. Upon the death of any active or retired member of this association there shall be collected from each surviving active or retired member thereof the sum of five dollars ($5.00), said amount to be paid on or before the second pay day of the fire department after the death of said member, and in default of such payment the secretary shall strike the name of the defaulting member from the rolls of the association; provided, however, that the board of trustees of this association may extend the time for such payment. All moneys received by this association must be placed in the one general fund.

"All moneys received at a death assessment in excess of fifteen hundred dollars must be placed in the general fund. When the general fund equals or exceeds the sum of twenty-five hundred dollars ($2,500.00) there shall be no assessment made upon the members of this association upon the death of one of its members, but the beneficiary of such member shall be paid from the general fund; provided, however, that no two death assessments shall be paid in succession from the general fund except by the unanimous vote of the trustees and the approval of the president of the association.

"Section 4, art. 8. Upon the death of an active or retired member of this association there shall be paid, within ninety days, to the person or persons (to be designated by said member named in the instrument on file in the office of the secretary) the sum of fifteen hundred dollars ($1,500.00) under section 3, article 8."

It is said that these amendments were made under amended articles of association, which were adopted after Pokrefky became a member of the association; but we do not see that this fact has any especial significance. The defendant claims the following as sufficient evidence of assent to carry the question to the jury, when considered in the light of the by-laws, which quadrupled the dues, increased the sick and accident benefits, and fixed the amount due upon death of a member at $1,500, whereas before it might have been more or less than that sum, as it depended on the number of members at death: (1) Testimony that the defendant paid monthly dues regularly for five months at the increased rate. (2) That he paid two assessments after the amendment. (3) The fact that he must have known of the change in the by-law. (4) His failure to sign a protest against the amended by-laws. (5) Testimony of a witness that Pokrefky had told him that he was well satisfied with the amendments and the provision for a death benefit of $1,500.

The first two propositions are not disputed, and we do not discover that the third is. It would be inconsistent for plaintiff's counsel to dispute it, for the reason that they claim, and sought to prove, that deceased signed a protest a few days after the adoption of the amendment. Such a protest was offered in evidence by the plaintiff's counsel. It is as follows: "Detroit, Mich., July 3rd, 1896. To the Board of Trustees of the Fireman's Fund Association—Gentlemen: We, the undersigned members of the Firemen's Fund Association, protest against the chan-

Digitized by Google

ion,
uld
ent
or
id
o
l,

benefits, in common with others. Plaintiff's counsel says in his brief that, "It seems to have been understood that some change would have to be made to meet the increasing number of sick and accident cases." This was done by not only increasing the dues from which such claims had theretofore been paid, but also by making a rule which might, and probably would, and did, divert a portion of the assessments to the same purpose. Did he not then owe a duty to his associates of refusing the benefits of such amendment or giving his assent? Could he consistently pay the added dues with the knowledge of doubled indemnity in the mat-
er of sick benefits, and pay assessments with
he knowledge that other beneficiaries were
eceiving reduced death benefits, all the while
ntertaining the secret design to assert the
validity of the by-law as to his own policy?
e argument that the amendments are di-
ble, and that he might assent to the in-
sed dues and sick benefits, while he did
assent to the change in death benefits,
tenable. We have seen that the changes
parts of one scheme, where possibly
ished death benefits and increased dues
ompensated by increased sick and ac-
benefits. There was a consideration
assent to such a change of contract.
se of Bogards v. Insurance Co., 79
0, 44 N. W. 856, is in point upon this
There a policy providing compen-
r loss by fire was changed so as to
liability when the loss was caused
m steam power used on the prem-
plaintiff, with knowledge of this
de no objection, but continued his
, and attended a meeting where
her by-laws were read. It was
this he assented to the change
caused by the change in the by-
"this is not in conflict with the
blished in Becker v. Ins. Co.,
12 N. W. 874," upon which
fendant in this cause relies.
gnize the rule that a policy
l by a by-law, if assented to
Where there is a considera-
ase, such assent need not be
an express promise. Had
on the adoption of this by-
e assented to the change in
e think that he is equally
which clearly indicate his
y his associates have a
hat he does assent. We
the jury were this case
, though, if it is true
l assessments, with full
as doing so under the
protest, and expressed
e change, the finding
nreasonable as to jus-
the members of the
in its success. Al
the dangers whic
ted in avert

Digitized by Google

aster. It was no great hardship to ask the deceased to bear his share of the burden, and not seek to impose it upon his associates, if he gave them a right to believe that he consented to do otherwise.

The judgment is affirmed.

CARPENTER and GRANT, JJ., did not sit. The other Justices concurred.

HARMON v. METCALFE et al.

(Supreme Court of Michigan. Nov. 3, 1903.)

EQUITY—DECREE—APPEAL WITHOUT GIVING BOND—ENROLLMENT—RETURN OF PAPERS.

1. Under Comp. Laws, § 550, as amended by Pub. Acts 1899, p. 380, No. 243, which provides that the court from which an appeal is taken shall not stay the proceedings for a longer period than until the appeal shall have been perfected, unless the party appealing file a bond for the performance of the decree or final order of the Supreme Court, a complainant, after obtaining a decree on foreclosure, from which an appeal is taken without the giving of a bond, is entitled on his proceeding to enforce his decree to a return of the papers to the circuit court, in order that they may be there enrolled, notwithstanding section 463, which provides for an enrollment of the decree after 30 days if no appeal therefrom shall have been entered in the minutes of the court.

Suit by Claude M. Harmon against Mary A. Metcalfe, impleaded with others. From a decree for plaintiff, defendants appeal. Motion by complainant for the return of the papers in the case to the circuit court in order that they may be enrolled. Motion granted.

On June 8, 1903, complainant obtained a decree of foreclosure of a mortgage against defendant Metcalfe, and under it caused to be published a notice of sale to take place September 10th. On August 27th complainant filed in the circuit court a præcipe for the enrollment of the decree. Before such præcipe was filed, the defendant had taken an appeal to this court, but had given no bond. The register of the court had returned the original files and papers to, and they are now on file in, this court. The sale took place in accordance with the publication, and the commissioner asks for a certificate of enrollment before executing a deed to complainant who was the purchaser. Complainant now moves for a return of these papers to the circuit court, in order that they may be there enrolled, so that he may obtain his deed.

John H. Goff, for the motion. James Swan, opposed.

GRANT, J. (after stating the facts). Prior to 1899 the defeated party in chancery cases was required, as a condition of his appeal, to give a bond conditioned for the performance or satisfaction of the decree. Comp. Laws, § 550. That section was amended by the Legislature of 1899 (Pub. Acts 1899, p. 380, No. 243) providing that: "The court from whose decree said appeal shall be taken and perfected shall not stay proceedings in said cause for a longer period than until said appeal shall have been taken and perfected, unless the party taking such appeal shall within such time file with the register of said court a bond to the appellee or appellees, with sufficient surety or sureties, to be approved by a circuit judge or circuit court commissioner of said county and with such penalty as such judge or commissioner shall approve, conditioned for the performance or satisfaction of the decree or final order of the Supreme Court in the cause and payment of all costs of the appellee or appellees in the matter of appeal." The evident purpose of this amendment was twofold: (1) To permit appeals in chancery without giving a bond; (2) to permit the appellee to proceed to enforce his decree as in suits at law, unless a bond for stay of proceedings be given. The appellee, as in suits at law, assumes the risk of reversal in the appellate court, and the proceedings subsequent to decree are, of course, void if the decree is reversed. If affirmed, the appellee saves time, which may be of considerable value to him.

Section 463, Comp. Laws, provides for an enrollment of the decree after 30 days "if no appeal therefrom shall have been entered in the minutes of the court." This provision is the same as in the statute of 1846. Rev. St. 1846, p. 362, c. 90, § 58. No claim of appeal was necessary. Covell v. Mosely, 15 Mich. 514. The bond was the only paper to be filed. The bond stayed all further proceedings in the circuit court. Whether section 463 refers to entering the bond or entering the fact that an appeal had been taken is of no consequence. The act of 1899, doing away with the bond, and permitting further proceedings in the circuit court, is a modification of section 463, and authorizes an enrollment, though the appeal be entered in the minutes of the court. It is true that an appeal transfers the cause to this court, to be heard de novo; but it is the same case that was heard in the lower court, and the decree is there entered in the journal of the court. The Legislature may properly provide for proceedings in the lower court after appeal without bond. Having so done, it follows that the appellee is entitled to the enrollment in the court below as a part of the proceedings subsequent to decree. The papers, after enrollment, will be returned to this court.

Motion granted. The other Justices concurred.

HALE v. KNAPP.

(Supreme Court of Michigan. Nov. 3, 1903.)

REAL ESTATE BROKER—CLAIM FOR SERVICES—INSTRUCTIONS.

1. A real estate agent having property of others for sale, who requests a prospective buyer to go with him to see the property, cannot

Digitized by Google

harge the latter for his services and expenses n making such trip.

2. An instruction, in an action for services endered for defendant, that one item in the ccount being illegal and no claim against defendant, the jury had the right to consider that tem in determining whether other items in the ccount were legitimate or not, was not erroneous.

3. Error in an instruction that plaintiff, in rder to recover, must have a clear preponderance of the evidence, was not prejudicial where he court stated that that did not mean that he nust produce the greater number of witnesses, but that the testimony of his witnesses must carry greater weight, and that if the evidence was evenly balanced defendant was entitled to the verdict.

Error to Circuit Court, Benzie County; Clyde C. Chittenden, Judge.

Action by Leo F. Hale against Myron A. Knapp. Judgment granting insufficient relief, and plaintiff brings error. Affirmed.

Plaintiff was a real estate agent in the village of Frankfort. The defendant was a manufacturer residing in Chicago. Plaintiff advertised two sawmills for sale. Defendant saw the advertisement, and opened a correspondence in regard to them. One was situated at Frankfort, the other at Mesick. At the request of plaintiff, defendant went with him to Mesick to see the property there, but refused to buy it. The citizens of Frankfort were anxious to get defendant's manufactory located at that place. Plaintiff, with others, interested himself in the negotiations. Defendant finally located at Frankfort. Plaintiff then rendered a bill to defendant for $250 for services in procuring the location. The bill was not itemized. Defendant denied liability, except for some services which he had specially requested plaintiff to perform. Plaintiff kept no memorandum of his services. Upon defendant's refusal to recognize liability, plaintiff brought suit. The bill of particulars sets up 35 items, running from July 5th to November 22d, amounting to $503.87. The case was submitted to a jury, who rendered a verdict for the plaintiff for $39.15. Plaintiff alleges error.

Louisell & Nevius, for plaintiff in error. D. G. F. Warner, for defendant in error.

GRANT, J. (after stating the facts). The principal assignments of error relate to the charge of the court. Counsel assert that the charge was "argumentative, contradictory, inconsistent, and unduly emphasized the theory of the defense." We have carefully examined the charge, and do not consider it subject to this criticism. The issues were fairly submitted to the jury. Among the items was one for $25 for a day's trip with defendant to Mesick to see the property of which plaintiff had the sale for other parties, and another item of expense in going and coming. The court instructed the jury to reject these items, and we think correctly. He instructed them that, these items being illegal and no claim against the defendant, they had a right to take them into consideration in determining whether the other items in t of particulars were legitimate or not. not think this was error, in view of the acter of the claim for services in going defendant to see the property at Mesic one portion of his instruction the cour that the plaintiff must have a clear p derance of evidence. Standing by itself as we have held, would be error; bu court, near the close of his instruction plained to the jury what he meant, i following language: "That does not that he must produce before you the g number of witnesses, but that the testi of the witnesses he does produce must greater weight with you—have more c cing force—than the other. In other w if the testimony is in your judgment e balanced, your verdict must be for th fendant, because the plaintiff must est his case by a preponderance of the evide Under this instruction we think there w prejudicial error.

Counsel allege error upon some remar counsel for defendant in his argument t jury. We are not prepared to say that were not justified by the evidence.

Several questions are raised upon th mission and rejection of testimony. We no error in them, and do not regard the sufficient importance to the professio merit discussion.

The judgment is affirmed. The other tices concurred.

PEOPLE v. QUIMBY.

(Supreme Court of Michigan. Nov. 3, 19

MURDER—EVIDENCE—RES GESTÆ—ADMISS —INSTRUCTIONS — JURY — CHALLENGE CAUSE — NEW TRIAL — NEWLY DISCOVE EVIDENCE.

1. Under Comp. Laws, § 11,947, providing the previous formation or expression of opi not positive in character, in reference to guilt or innocence of the prisoner, or a pre opinion, not positive in its character, or not ed on knowledge of the facts, shall not ground of challenge for principal cause if person summoned shall declare on oath tha believes he can render an impartial verdict cording to the evidence, the court properly o ruled a challenge for cause when the juror tified that he had a partial opinion as to guilt or innocence of defendant, formed by r ing about the case, but that he could base verdict solely on the evidence.

2. Where, on a prosecution for murder, it shown that the accused had two children; previous to their death she had purchased phine and empty capsules; that she had pressed her intention of killing herself and dren; that neighbors, on going to her reside found her in bed, apparently unconscious; her children were also in bed, unconscious; boxes were found, containing a white pow and also capsules were found—the statement the accused, on her regaining consciousness, while the unavailing efforts to revive the dren continued, to the effect that she had gi the children morphine, were admissible as a of the res gestæ.

3. An unsigned paper in the handwriting the accused on trial for the murder of her ch and delivered by her to her mother on the

Digitized by Google

the accused's property, was admissible in the nature of an admission.

4. On the trial of one charged with murdering her child by means of poison, the testimony of a physician that he found morphine in the stomach of the child was admissible where other evidence showed that the poison was received in the lifetime of the child.

5. On a trial of a mother charged with the murder of one of her two children by means of poison, evidence indicating the poisoning of both children was admissible.

6. The trial judge is not bound to follow the exact language of requests to charge, if he properly states the law applicable to the evidence and the several theories of the case.

7. On a prosecution for murder, an instruction that if the accused, by reason of an abnormal desire to commit suicide, inherited from her ancestors, was unable to resist the impulse to do so with knowledge of the wrong she was committing by killing her children, took their lives voluntarily, because she did not wish to leave them living at her death, then she could not avoid the responsibility because the crime was induced by an inherited tendency to suicide, was not misleading where the court told the jury that, if she knew right from wrong, and at the time of the act she had by mental disease so far lost her power to choose between right and wrong that her free will was destroyed, then she would not be responsible.

8. Where defendant, to support her defense of insanity, gave evidence of the insanity of her father and other relatives, it was not error to deny a motion for a new trial based on the ground that since the trial a sister of defendant had been adjudged insane.

Error to Circuit Court, Gratiot County; George P. Stone, Judge.

Sarah Quimby was convicted of murder, and she brings error. Affirmed.

Jno. T. Mathews, for appellant. Charles A. Blair, Atty. Gen., M. R. Salter, Pros. Atty., and Julius B. Kirby, for the People.

MOORE, J. The respondent was convicted of murdering, on the 20th of May, 1901, Beatrice Bailey, nine years old, a daughter by her first husband. She was sentenced to imprisonment for life. The theory of the prosecution was that Beatrice came to her death from the effects of morphine poison administered by the respondent with criminal intent. It was the theory of the respondent's counsel that the respondent was insane, and not responsible for her actions; that on the night in question Elmer Quimby, the husband of the respondent, was present when the poison was administered, and administered it, or at least caused it to be done, if in fact Beatrice died from the effects of morphine poison. After the case was tried, a motion was made for a new trial upon the ground of newly discovered evidence and upon the ground that the court erred in several particulars in his rulings and in his charge. The motion for a new trial was overruled. The case is brought here by writ of error.

The respondent exhausted her peremptory and, in order to excuse them, she was obliged to challenge them peremptorily. The first question is, should the court have sustained the challenge for cause? If the challenge for cause should have been sustained in any of the instances where it was overruled, it was in the case of the juror Sherman. The record discloses the following: "Q. Then you have an opinion? What do you mean by a partial opinion? A. It is not a real strong opinion. Q. That partial or part opinion? A. It is abiding with me now. Q. Fixed and abiding in your mind? A. Yes. Q. If you were a juror in this case, you would start in in the trial with that opinion now? A. I could not help it. Q. It would take evidence to break that opinion, would it not? A. Yes, certainly." On the cross-examination he said: "Q. You say that that is a partial opinion? A. It is. Q. You mean you have an impression or opinion formed by reading? A. That is it exactly. Q. An impression as to the guilt or innocence of the defendant? A. Yes. Q. What do you say about whether you could lay aside that impression you have formed, and could, upon the evidence given here in court, base your verdict solely upon the evidence, and render a verdict in accordance with it? A. I think I could. By the court: Q. Did you ever talk with any one who claimed to know—have personal knowledge of—any of the facts? A. No, sir. Q. All you ever heard or have known about it, whatever, is what you have read in the newspapers? A. Yes. Q. Can you recall how many papers you read that in? A. I think it was two, the News and Free Press. Q. Did that statement purport to give a detailed statement of it, or was it a mere mention of the matter? I understand that newspaper account didn't make a sufficient impression on your mind so that you can now recall what you did read about it. A. Why, certainly. Q. You can't now remember what you read? A. No, I cannot. Q. That didn't make enough impression upon your mind—that newspaper article—so that you can now recall what you read? A. No, it didn't. It has been quite a spell ago. Q. But you remember reading about it? A. Yes. Q. And you remember that reading made some impression on your mind? A. Upon my mind, yes. Q. Would that impression be such that it would embarrass you in any way from giving the defendant the presumption of innocence, and starting in with the presumption of innocence clear through the trial, and rendering a fair and impartial verdict upon the evidence introduced here, and the charge of the court? Would you be embarrassed in any way in that by that impression? A. I think not. The Court: I think the challenge may be overruled. Mr. Leet: Mr. Sherman, you say that you now have an opinion in reference to the guilt or innocence of the

Digitized by Google

defendant in this case? A. That is what I said. Mr. Leet: We challenge him for cause. The Court: Overruled." It is said by counsel for respondent that the case is controlled by People v. Thacker, 108 Mich. 652, 66 N. W. 562. It must be confessed the case now under consideration is near the border line, but we think it distinguishable from the case of People v. Thacker. In that case the juror had talked with Mr. Waterbury, a member of the jury which was impaneled by the coroner, who claimed to state the circumstances of the case, and the juror believed what Mr. Waterbury stated was true. In the case at bar the juror talked with no one who had personal knowledge of any of the facts connected with the alleged crime. In Holt v. People, 13 Mich. 228, it is said: "To require that jurors shall come to the investigation of criminal charges with minds entirely unimpressed by what they may have heard in regard to them, or entirely without information concerning them, would be, in many cases, to exclude every man from the panel who was fit to sit there. With the present means of information the facts or rumors concerning an atrocious crime are, in a very few hours, or days at the farthest, spread before every man of reading and intelligence within the district from which jurors are to be drawn, and over the whole country if the atrocity be especially great. And there are some crimes so great and striking that even the most ignorant will have information and impressions in regard to them; and the rule, as stated, applied to such cases, would render the impaneling of a jury for their trial impossible, and make their very enormity a complete protection from punishment. Without attempting or desiring to lay down rules for all cases, it is sufficient for us to say that the showing in the present case falls far short of establishing cause for challenge. The juror is shown to have formed a partial opinion, but not a positive opinion. This opinion was not based upon anything he had himself witnessed, or from information derived from those who claimed to know the facts, but upon street rumors. Now, when a person says he has formed, from street rumors, a partial, but not a positive, opinion, we think he is to be understood as speaking only of those impressions which every one receives insensibly when a charge of crime is made, but which, so far from amounting to settled convictions, do not in the least preclude an impartial examination of the facts when afterwards presented in the form of legal testimony. We understand him to speak of that class of impressions which were held by Chief Justice Marshall to be no ground for excluding a juror: 'Those light impressions, which may be fairly supposed to yield to the testimony that may be offered,' and 'which may leave the mind open to a fair consideration of the testimony'; not of 'those strong and deep impressions, which will close the mind against the testimony that m
fered in opposition to them, which
bat that testimony, and resist its
Burr's Trial, 416. See, also, Osiand
3 Leigh, 785, 24 Am. Dec. 693;
Eames, 3 Scam. 78, 36 Am. Dec. 51
ford v. State, 15 Ind. 351; State v
18 Conn. 174, 175." See Stephens v
38 Mich. 739; Ulrich v. People,
246. In People v. Barker, 60 Mich
N. W. 539, 1 Am. St. Rep. 501, it v
"The opinion entertained by a jur
disqualifies him is an opinion of t
character which repels the presumpti
nocence in a criminal case, and i
mind the accused stands condemned
It is not because it will require s
dence to remove impressions or
formed from rumors, newspaper sta
or from whatever other sources t
pressions may have been received,
juror is disqualified. The sources of
tion are important in determining t
likely to have been produced upon t
of the juror, and the influence likel
exerted upon his judgment; but the
mind is so constituted that impressio
upon it which lead toward certain
sions, whether reached or not, will
require other impressions to be
eradicate the former ones, or to lead
different conclusions; in other wor
require some evidence to remove the
all are conscious that notions enterta
us are not all of the same stable ch
and range all the way from convictio
is the ultimate effect of ratiocination
passing comment or idle words tha
no permanent impression. The q
therefore, must be always one of deg
the trier is called upon to determine
the opinion entertained by the jur
that fixed or permanent character wh
qualifies him from coming to the ca
fair, candid, and impartial frame o
which is unaffected with prejudice or
either party." In the case of Pe
Foglesong, 116 Mich. 556, 74 N. W. 7
question was under discussion. Th
referred to the case of People v. T
and held that, while a proper resu
reached in the case, some of the la
used therein was not a correct stater
the law. The court also used the fo
language: "It is not possible for a mu
be committed without it being the su
wide-spread comment, and it becom
subject of many newspaper articles,
wideawake and intelligent men, wh
newspapers, are almost sure to learn
thing of what is claimed in relation to
er a crime has been committed or n
who committed it. It is not desirab
the rule in relation to the compete
jurors should be so fixed that only
norant and unfit can do jury service i
important cases. On the other han
accused is entitled to be tried by juro

Digitized by Google

addition to the cases cited, see Holt v. People, 13 Mich. 224; People v. Barker, 60 Mich. 277, 27 N. W. 539; 1 Am. St. Rep. 501. We do not think the court erred in overruling the challenges to the proposed jurors."

We think it a fair inference from what was said by the juror that what he read in the newspaper created in his mind an impression as to the guilt or innocence of the accused, but that the impression was not of such a fixed character that the juror could not give the respondent the benefit of the presumption of innocence, and render an impartial verdict, based upon the evidence in the case. The statute (Comp. Laws, § 11,-947) reads as follows: "The people of the state of Michigan enact, that the previous formation or expression of opinion or impression, not positive in its character, in reference to the circumstances upon which any criminal prosecution is based, or in reference to the guilt or innocence of the prisoner, or a present opinion or impression in reference thereto, such opinion or impression not being positive in its character, or not being based on personal knowledge of the facts in the case, shall not be a sufficient ground of challenge for principal cause, to any person who is otherwise legally qualified to serve as a juror upon the trial of such action: provided, the person proposed as a juror, who may have formed or expressed, or has such opinion or impression as aforesaid, shall declare on oath, that he verily believes that he can render an impartial verdict according to the evidence submitted to the jury on such trial: provided, further, the court shall be satisfied that the person so proposed as a juror does not entertain such a present opinion as would influence his verdict as a juror." The juror was within the terms of the statute, and we think the judge did not err in his rulings.

Error is assigned because the court admitted testimony of what the respondent stated in the morning of the day the little girl died. It is necessary here to state what was shown by the people's witnesses. The respondent had a son, James Bailey, who was about a year younger than Beatrice. The two children and the mother had lived on a 40 acres of land with the husband of Mrs. Quimby. The husband and wife quarreled, and it is claimed Mr. Quimby was unkind to the children, and desired to be rid of them. It was shown that on Saturday previous to the death of the little girl Mrs. Quimby purchased a box of morphine and some empty capsules; that she had expressed to at least one witness the intention of killing herself and her children. On the morning of May 20th Mr. Quimby called the attention of some of the neighbors to the fact there was crape on the door where Mrs. Quimby lived. The dence, where they found Mrs. Quimby lying in bed, clothed in her nightrobe, and apparently unconscious. By her side was Beatrice, also in her nightrobe and unconscious. James, also in his nightrobe, was upon a couch in an adjoining room, also unconscious. Some boxes were found in the buttery, in which was a white powder, and some capsules were also found. These boxes and capsules were afterwards identified by the druggist as the ones delivered by him to Mrs. Quimby, and the powder was shown to be morphine. Mrs. Odell and the neighbors at once attempted to revive Mrs. Quimby and the children. In the case of Mrs. Quimby their efforts were successful, and she was soon about the house. The prosecuting attorney and a doctor and others soon arrived, and efforts were continued to revive the children, who were still alive, though unconscious. These efforts were unavailing, and about 10 o'clock both of them died, one a few minutes after the other. After Mrs. Quimby had recovered consciousness, while both the children were living, she stated, in response to a question by one of the neighbors, the children had had morphine. She also stated the little girl threw it up about 4 o'clock, and she gave her some more. The doctor, who arrived before the children died, testified that, judging from the symptoms and what he saw of the children, they were suffering from poisoning by morphine or opium, and were so far gone as to be beyond all help, and died within 15 or 20 minutes after his arrival. After the prosecuting attorney arrived, he had a talk with Mrs. Quimby, in which she told him she was a murderess, and asked not to be arrested until after the children were buried. It is claimed the court erred in allowing testimony to be given of the statements of Mrs. Quimby, for the reason that the corpus delicti had not been proven outside of her statements. These conversations occurred during the progress of this horrible tragedy, and were a part of it. They constituted a part of res gestæ, and were admissible. See Sullivan v. State (Neb.) 79 N. W. 721. In this connection we may as well dispose of the assignment of error alleged because of the admission of an unsigned paper, which, upon the day in question, was delivered by Mrs. Quimby to her mother, who caused it to be delivered to the prosecuting attorney. The paper purported to give an account of the occurrences of the night at the Quimby residence, and made requests as to the funeral and burial and disposition of Mrs. Quimby's property. The letter was shown to be in the handwriting of Mrs. Quimby. It was admissible as in the nature of an admission by her.

Upon the trial Dr. Vaughn was allowed to testify that he had analyzed the contents of the stomach of James, and found morphine

Digitized by Google

entered the stomach before death; and, second, that it was not competent in a case where the respondent was charged with the death of Beatrice. It is true the doctor stated he could not tell, from his analysis, when the poison entered the stomach, but that was not conclusive. His testimony was only part of the people's case. In addition to what we have already mentioned, it was shown the bodies were embalmed by an undertaker, were later buried, were afterwards exhumed, the stomachs removed, sealed up in glass jars, and delivered to Dr. Vaughn. It was also shown that the grave was undisturbed until the bodies were exhumed, that there were no marks upon the bodies except the incision made by the trocar in injecting the embalming fluid, which fluid contained arsenic, but no morphine. Under this state of facts, instead of there being no proof that the stomach received the morphine before death, we think the proof is very convincing it was received before death. Was proof of the contents of the stomach of the boy competent evidence as bearing upon the question of what caused the death of the girl? The children were brother and sister, of nearly the same age. They were in good health on Saturday. Early Sunday morning they were found in the presence of the mother, who the day before bought poison. They were unconscious, and were suffering in the same way, with symptoms indicating morphine poisoning. They never recovered consciousness, but the symptoms of morphine poisoning continued until they died within a few minutes of each other. The proofs indicated the poisoning of both children was one transaction. We think the evidence was competent. See People v. Foley, 64 Mich. 148, 31 N. W. 94.

Complaint is made of the failure of the court to give the requests of counsel for the respondent and of the charge as given. It is said: "By section 10,244 of Miller's Compiled Laws, parties are at liberty to request the court to charge upon questions of law. By section 10,246, 'the instructions so settled * * * shall be read to the jury, * * * and the court shall in no case orally qualify, modify or in any manner explain same to the jury.' Under the above-mentioned sections and section 10,243 this court held in the case of Cook v. Brown, 62 Mich. 473, 29 N. W. 46, 4 Am. St. Rep. 870, 'Where requests are based on correct principles of the law, and in clear, terse, and comprehensive language, to be easily understood by the jury, it is not only proper, but the duty, of the court to give the request in the language presented. See, also, People v. Stewart, 75 Mich. 21, 42 N. W. 662.'" A reference to the note under section 10,246, Comp. Laws, will show its provisions are not applicable where a stenographer is employed. In the two cases cited by counsel the opinions were prepared by counsel. It, however, has been repeatedly held, and we understand it to be the law, that the trial judge is not bound to follow the exact language of the written requests, if he properly states the law as applicable to the evidence and the several theories of the case as presented by counsel. See Wright v. Irwin, 35 Mich. 346; Keables v. Christie, 47 Mich. 594, 11 N. W. 400; Ulrich v. People, 39 Mich. 245; Joslin v. Le Baron, 44 Mich. 160, 6 N. W. 214; People v. Sligh, 48 Mich. 54, 11 N. W. 782; Power v. Harlow, 57 Mich. 107, 23 N. W. 606; Alton v. Meenwenberg, 108 Mich. 629, 66 N. W. 571. We think such of the requests to charge as should have been given were fully covered by the general charge.

We have already said it is claimed upon the night in question the respondent was insane, and not responsible for her acts. As bearing upon that question, evidence of her acts and conversation before and after May 20, 1901, was given. Testimony was also given to the effect that the father and brother of the respondent were insane, and committed suicide, and that earlier in the history of her family there had been insanity in it. The court charged the jury upon the question of insanity, and error is assigned upon that portion of it reading as follows: "Now, if the respondent in this case, by reason of an abnormal desire to commit suicide, inherited from her ancestors, was unable to resist the impulse to do so, with knowledge of the wrong she was committing by killing the children, took their lives voluntarily because she did not wish to leave them living at her death, then she cannot avoid the responsibility because the crime was brought about by an inherited tendency to suicide." Taken by itself, this language may be somewhat obscure, though we get from it the idea that, even though the jury find the respondent, because of inherited tendencies, could not resist the impulse to commit suicide, even then, if she voluntarily killed her children, knowing it to be wrong, she could not avoid responsibility for the act. When this portion of the charge is read in connection with the rest of what the judge said upon that subject, we think it is made very clear. He said: "If she knew right from wrong, and at the time of the act she had by mental disease so far lost the power to choose between right and wrong that her free will agency was at that time destroyed, and the criminal act was so connected with such mental disease as to have been the sole cause of it, then the respondent would not be responsible, and your verdict should not be guilty because of insanity. So, gentlemen, the question is not whether the respondent's mind was natural or unnatural. It is not whether her mental faculties were impair or unimpaired. The only question is, if administered morphine to those children

Digitized by Google

doing it if she had chosen to do so? * * * Now, evidence has been introduced here tending to show that the father and brother of this respondent committed suicide. Suicide, of itself alone, is not evidence of insanity. It may be considered together with other facts and circumstances in determining the question of sanity, and the question of insanity is to be considered in determining the question of responsibility for crime. A person may inherit from his ancestors a kind of insanity which would deprive him of the power to choose right and wrong; and, if such a person is charged with crime, it is of the very greatest importance to ascertain such inherited tendency, to determine whether the person is responsible for the crime. On the other hand, a person may inherit from his ancestors an exceedingly gloomy, despondent temperament and disposition, and a tendency to fits of despondency and melancholy so deep and so protracted as to naturally lead to suicide; and such inherited tendency, though affecting the mind, and rendering it abnormal, would not, of itself, be evidence that the person did not know right from wrong, and was not responsible for taking the life of another." Then follows that portion of the charge which we have already quoted. Following that the judge charged: "Every person is presumed to be sane until the contrary is shown. If no evidence of insanity had been given, then you would presume the respondent to be responsible for her acts. When evidence is introduced upon that question, then the question of whether or not the respondent is responsible for her act becomes a question for you to determine from all the evidence bearing upon it; and if, after carefully considering all of such evidence, there should remain any reasonable doubt as to whether or not she was responsible, then your verdict should be 'Not guilty, because of insanity.' If, on the other hand, you find beyond a reasonable doubt that the children were killed and murdered by poison by the respondent, and the evidence convinces your minds so that you have no reasonable doubt that she was responsible for her act, under the rules I have given you, then your verdict should be, 'Guilty of murder in the first degree.' In determining this question, consider carefully all the facts bearing in any manner upon it. Did she inherit insanity from her ancestors? If so, what was the nature of such insanity? What has been her life and habits and surroundings, as disclosed by the evidence? What has been her physical condition, and how has that been affected by her life and habits? Consider what her friends and neighbors have discovered in regard to her actions as tending to show whether or not she is sane or insane. Consider the testimony of the doctors who base an opinion? Consider carefully her actions just before and at the time of the committing of the crime. Did she do any act preparatory for the committing of the crime? If so, look carefully to see what it was. How was it committed? Did she make any statement in writing during that Sunday night? If so, look into it. Does it indicate that she was at that time irresponsible, or does it indicate to the contrary? Consider her statements the next morning, if she made any and all her statements and conduct since her arrest, so far as they are disclosed by the evidence; and from all these, and any other evidence that I have not referred to, touching the question determining whether or not on that Sunday night the respondent was such a woman as should be held responsible for the crime with which she is charged." We do not think the jury had any difficulty in understanding the meaning of the court.

As before stated, the judge overruled the motion for a new trial. This motion was based upon alleged errors which had occurred during the progress of the trial, and particularly because the only surviving sister of the respondent had since the trial become insane. In giving his reasons why he refused a new trial the circuit judge said, among other things: "The respondent gave evidence in her defense as to the insanity of her father and other of her relatives, and the same was submitted to the jury by the court. The fact that one of respondent's sisters, since the trial of this case, had been adjudged an insane person, while tending to make the taint of insanity in respondent's family more marked, is only indirect evidence as to the mental condition of the respondent at the time of the commission of the crime. The fact would still remain that the best and most satisfactory evidence of the mental condition of respondent at the time of the commission of the offense is her actions and conduct at and about the time in question." Proof of the insanity of the sister was testimony of the same character as proof of the insanity of the father and brother, and was cumulative testimony. We cannot say the judge erred in refusing to grant a motion for a new trial. There are 40 assignments of error. We cannot discuss all of them, though they have all had our attention. We have discussed such of them as to us seemed important. The case is an important one, and was well calculated to produce a high degree of excitement. We are impressed with the idea that the court and its officers attempted to accord to the respondent a fair and impartial trial, which attempt was successful.

Judgment is affirmed.

CARPENTER, J., did not sit. The other Justices concurred.

Digitized by Google

HARTWIG v. MAYOR AND COMMON COUNCIL OF CITY OF MANISTEE.

(Supreme Court of Michigan. Nov. 3, 1903.)

OFFICERS — REMOVAL — PROCEEDINGS — REVIEW—MANDAMUS—QUO WARRANTO—QUALIFICATION OF OFFICER — SALARY DURING SUSPENSION.

1. Where a city street commissioner was removed from office for incompetency after a hearing and investigation on charges by the city council, which had authority to remove him, the legality of the proceedings could not be reviewed by mandamus.

2. Where, pending proceedings for the removal of relator from the office of street commissioner, the record showed that another acted as such and performed the duties of the office, quo warranto could be maintained against such person to determine whether relator was properly removed.

3. Where relator was unfit to perform the duties of the office of street commissioner to which he was appointed, during a period between his suspension and removal, he was not entitled to mandamus to compel the payment of his salary during such period.

Certiorari to Circuit Court, Manistee County; Clyde C. Chittenden, Judge.

Certiorari by Claus Hartwig against the mayor and common council of the city of Manistee to review an order denying plaintiff's application for mandamus to compel his reinstatement as city street commissioner. Order affirmed.

Thos. Smurthwaite and Frank L. Fowler, for relator. John H. Grant, for respondents.

CARPENTER, J. This is a mandamus proceeding brought to this court by a writ of certiorari. Relator was street commissioner of the city of Manistee. His term of office expired, according to his claim, on the 19th of April, 1901. His salary was $800 per year, payable in monthly installments. On the 19th of June, 1900, respondent passed a resolution suspending relator from his office, pending an investigation of the charge that he was "incompetent and unreliable in his work and in the management of the affairs of the city." September 19, 1900, after an investigation of these charges as amended (the amendment made the charges more specific), a resolution was adopted by respondent, removing relator from said office. Respondent body had authority, after hearing and investigation, to remove relator from office. It is claimed, however, that those proceedings were irregular, and that there was no authority to suspend him. Relator seeks in this case a mandamus compelling respondent to pay his salary for the three months intervening between his suspension and removal, during which time he did not, though willing to do so, perform the duties of his office. The trial court refused to issue the writ.

We cannot, as requested by relator, inquire into the regularity of the proceedings which resulted in his removal. He was, in fact, removed from office, after a hearing and investigation, by a body possessing the authority to remove him. If relator v raise the claim that notwithstandin moval he was de jure the street sioner of Manistee, he should have by quo warranto. Fuller v. Attor eral, 98 Mich. 96, 57 N. W. 33. E raise that issue on an application f of mandamus. See Pipper v. Wayr Judges, 122 Mich. 688, 81 N. W. 962; v. Bullock, 122 Mich. 620, 81 N. People ex rel. Cuthbert v. Common 18 Mich. 338; School District No. 8 61 Mich. 373, 28 N. W. 132; Pa Board of Education, 96 Mich. 302, 799.

In reaching this conclusion, we overlooked the contention of rela proceedings by quo warranto could been instituted, because there was disputing relator's title to the office. not draw this inference from the re is true that it appears that at the ti proceedings were instituted relator's had not been nominated and confirm it also appears that during the inve one Earnest Nitz acted as street con er. We are not warranted in infer Nitz did not continue to perform tl of that office until relator's succes regularly appointed. We cannot, t infer that there was not some per forming the duties of this office, whom quo warranto proceedings co been commenced.

Full effect cannot be given to th removing relator from his office wit suming him guilty of the charge against him. It must be assumed lator was guilty of these charges, as been adjudged to be. We must therefore, that relator was unfit to the duties of his office during the pe which he now seeks to recover his Under this assumption relator is n though he was illegally suspended f fice), under the authority of McQueen mon Council of Detroit, 116 Mich. 9 W. 387, entitled to a writ of mandam pelling the payment of that salary.

The order of the court below wil fore be affirmed, with costs. The ot tices concurred.

CHEEVER et al. v. ELLIS et a

(Supreme Court of Michigan. Nov. 3,

EXECUTORS AND ADMINISTRATORS CHARGE OF TRUSTS — NEGLIGENCE CHARGING ACCOUNT—ACTS OF AGE NUAL ACCOUNTS—CONCLUSIVENESS.

1. Where an executor is directed to trust fund for the benefit of the estate, is not discharged by returning the princ vested, without accounting for his fa realize a profit on the investment.

2. An executor cannot divest himself sponsibility regarding his trust by emplo agent to act for him, though the agent ed was a person in whom his testate great confidence.

Digitized by Google

curities resulting from his negligence, on the ground that they were adjudications approving what had been done, and thereby binding the estate.

4. On a final accounting of an executor, various charges of losses sustained by the estate on account of the executor's negligence and want of diligence in managing the affairs of the estate considered, and his account surcharged as to some; and relieved as to others.

Appeal from Circuit Court, Washtenaw County, in Chancery; Edward D. Kinne, Judge.

Bill by Noah W. Cheever, as special administrator of the estate of Leonard Gruner, deceased, and others, against Caroline P. Ellis and others. From a decree allowing the final account of complainants, defendants appeal. Modified.

Arthur Brown (T. A. Bogle, of counsel), for appellants. Lawrence & Butterfield, for appellees.

HOOKER, J. The bill in this cause was filed by Noah W. Cheever as special administrator of the estate of Leonard Gruner, deceased, and in his own interest as bondsman for said Gruner and his coexecutor of Joseph J. Ellis, deceased, who died in 1886. The other complainants were also bondsmen. At the time of Gruner's death he was engaged in bitter litigation in probate court over the settlement of the Ellis estate. Gruner and Mrs. Ellis, testator's widow, were coexecutors, and had filed annual reports or accounts up to and including January 1, 1896, in which both joined, and these had been regularly allowed by the probate court. In September, 1899, Gruner filed a final account, in which Mrs. Ellis refused to join. Objections to this account were filed by Hudson P. Ellis, a son of Joseph J. Ellis; and soon after Mrs. Ellis filed a paper purporting to be her account as coexecutor, in which she alleged that she had at no time had any control over any of the property of the estate. Gruner filed exceptions to this paper, and the parties entered upon a prolonged contest over Gruner's account. Before the hearing commenced, Mrs. Ellis and Hudson P. Ellis joined in a petition for the removal of Gruner. The Ellises also filed a petition for a partial distribution of the estate, and the court ordered Gruner to give an additional bond in the sum of $75,000, which order was complied with. All of the issues raised by these various papers were pending when Gruner's account came on to be heard, and proofs were taken until the death of Gruner by suicide occurred. Cheever was then appointed administrator of Gruner's estate, and filed the bill in this cause.

Joseph P. Ellis was a resident of Ann Arbor, where he made the acquaintance of Myron H. French, who removed from Ann Arbor to West Branch, in Ogemaw county, French & Co. Ellis put $5,000 into this business, thereby becoming a copartner of French; and he also permitted or employed French to make loans for him upon real estate mortgages, and perhaps other securities in that county. These loans began in 188[illegible] and continued up to the time of Ellis' death when the amount of money thus invested had reached an aggregate of $35,000, or thereabouts. After the death of Ellis, two mortgages were given by French to Mrs. Ellis, for $5,000 each, which, by mutual agreement between them and Gruner, she was to accept as a payment upon her share of her husband's estate. These mortgages were given for the interest in the banking business owned by Ellis, and $5,000 in cash furnished from the estate. The will of Ellis made bequests, payment of which was to be deferred for several years, and made his executors trustees in relation thereto; and the executors continued to permit French to represent the estate in the collection of loans, and made other loans through him, up to about the time of his failure, which occurred in 1898. The controversy in probate court related principally to losses sustained by the estate through French, which Hudson P. Ellis and his mother charge in whole or in part to the negligence of Gruner; and this controversy is transferred by this bill to the court of chancery, and the parties have seemed content to litigate it in this case. The meritorious question is how much, if anything, should be charged against Gruner for the losses which he has caused or failed to prevent. The bill prays a receiver to take charge of $15,000 belonging to the estate of Ellis, which came to Cheever's hands on his intestate's death; that Hudson P. and Caroline P. Ellis be required to account for their management of the affairs of the Ellis estate, with a list of property within their possession or knowledge; that an account stated by the bill be decreed to be a complete account of the administration of the Ellis estate, so far as Gruner is concerned, and that his estate and complainant's be discharged from further liability in relation thereto; that other suits be restrained; and that the rights of the parties to certain property described in the bill be determined.

The cause was heard upon pleadings and proofs taken in open court. The account of Gruner was amended at the hearing, and it was allowed as amended. The learned circuit judge states, in an opinion filed, that "the only issues involved in this suit grow out of the management of the Ogemaw securities," and "the question is presented, to what extent, if any, Mr. Gruner should be held responsible for the losses, if any, which have been incurred in that county. * * * The proposition is now made that Mr. Gruner should be held responsible for whatever loss-

Digitized by Google

At the time this bill was filed, the final account of the executor had been filed, and the parties were engaged in taking proofs relating thereto in probate court; the same having been interrupted by the death of the executor Gruner. Both parties seem to have been willing to transfer this accounting to the court of chancery, and, while we doubt whether this was a competent practice, if objected to seasonably, the face of the bill probably shows jurisdiction; and, as it has not been questioned, we dispose of the case upon its merits.

The complainants' counsel state, and defendants' counsel concede, that the determination of three questions should settle this case, viz.: (1) Did Mr. Gruner exercise reasonable care? (2) Did any loss occur? (3) Did H. P. Ellis compromise?

The will directed the executors to sell and dispose of such part of the estate as they should deem for the best interests of the beneficiaries, and "invest the proceeds in secure interest-bearing bonds and mortgages, or other safe and reliable interest-bearing securities," and "to keep the legacies to my sons safely invested in good and reliable interest-bearing securities." Apparently the executor Gruner attempted to do this, and the evidence leaves as little doubt that he failed to do so, in regard to the funds invested in Ogemaw county. It is said that he never sent any of the money of the estate to that county, and the circuit court has so found. Counsel contend that Ellis himself invested money, aggregating nearly $38,000, of which $24,000 was realized in cash, and that there are securities in the administrator's hands for more than the remaining indebtedness. This is not a sufficient answer to the defendants' claim. Gruner's control began in 1886, and from that time he was legally charged, with his coexecutor, with the duty of investing this fund for the benefit of the estate as fast as it was paid in, and of collecting the securities as fast as they became due, if collectible, if the interests of the beneficiaries required it. There is no doubt that he should be allowed to treat as credits any securities taken by Ellis which were entirely worthless, and such as are yet outstanding which reasonable business prudence justified his omission or failure to collect; but it is not a complete answer for him to say, "I have here the principal that has been invested, and I am not to be held accountable for a failure to realize a profit on that sum." Nor is it an answer to say that Ellis had great confidence in French, and recommended him to Gruner as worthy of full confidence, thereby "justifying entire confidence on the part of Gruner, and excusing him in leaving the estate's interests in Ogemaw county entirely in his hands." He (Gruner), not French, was the executor. The complainant claims pay for his services as

lying upon his representations, to a necessary and reasonable extent, it would be going too far to say that he could divest himself of all responsibility regarding his trust by employing French to act in his stead.

After the appointment of Gruner, there came to his hands a large number of Ogemaw county mortgages. These had been negotiated by French, and were made payable at the bank of French & Co. (i. e., French and Ellis), at West Branch. It had been the custom of Ellis to collect money due, through French. It has been already stated that Ellis was a copartner in the bank. There also came to the hands of the executors a mortgage given by French to Ellis. It was conditioned as follows:

"This mortgage is given to indemnify the said Ellis against all loss or harm by reason of engaging in copartnership with the said French, and is intended to protect and secure said Ellis for all moneys and securities that may be entrusted to said French, either by himself or by others whereby said Ellis would be jointly responsible and also to protect said Ellis and insure the payment by said French of his share of the losses if any occur in the business of said copartnership, at West Branch, Ogemaw County, in banking and brokerage."

"Provided always, and these presents are upon this express condition, that if the said parties of the first part shall and do well and truly pay, or cause to be paid, to the said party of the second part, all his share of the losses if any arise in the copartnership between the said French and the said Ellis at West Branch, Ogemaw County, promptly and upon demand, and shall also faithfully account to said Ellis for all moneys and securities which may come into his hands as a member of said copartnership or as the agent of said Ellis, and pay over the same on demand, and shall promptly meet and pay his share of all the losses as aforesaid, if any occur (said parties having formed a copartnership for banking purposes aforesaid) then these presents shall cease and be null and void. But in case of nonpayment of the said losses or in case of a default in a faithful accounting and payment as aforesaid, at the time, in the manner and at the place above limited and specified for the payment thereof."

A year or so after Ellis' death there was a conference, at which the Ogemaw interests were discussed. At this conference, Mrs. Ellis, H. P. Ellis (then a minor), French, Cheever, and Gruner were present. It was then agreed to close out the copartnership, and a proposition was made by French, to take the Ellis interest, which was accepted. Mrs. Ellis agreed to make him a loan of $10,000, and two $5,000 mortgages were executed by French and wife to her. This amount was charged to Mrs. Ellis by the estate, and the

Digitized by Google

and he received $5,000 additional from the estate in cash. The indemnity mortgage was released. It is claimed, and there is some evidence tending to show, that it was then understood that French should continue to act for the executors as he had for Ellis in relation to the mortgages. At all events, he was allowed to do so, and the contestants acquiesced.

There appears to have been a difference in the value of lands in different sections of Ogemaw county—some, called "plains lands," being sandy; and while expectations that it would be found valuable may have prevailed for a time, and perhaps were indulged by French and Ellis, and possibly by Gruner, these expectations were not realized, and before 1890 Gruner directed French to take no more plains-land securities. Beginning about the year 1893 the Ogemaw lands depreciated in value, and it was difficult to sell them at any price. It is ascribed to a financial depression which pervaded the country at that time. French made collections upon some of the mortgages taken by Ellis, and in some instances either reloaned the money, or sent other mortgages already in his possession to Gruner, who accepted them. Some of these mortgages were upon plains land, and are claimed to have been worthless or inadequate security for the amounts represented by them. Some of the money collected was appropriated by French and withheld for a long time, or never paid. French engaged in many enterprises and investments, and his affairs culminated in his failure in 1898. Thereupon Hudson P. Ellis saw him, and obtained some security from him on behalf of the estate, which we need not discuss in detail at this point.

The want of reasonable care relied upon by contestants is summarized in the brief as follows: (1) "He never made any sufficient investigation as to the character, identity, location, productive qualities, or title of the Ogemaw securities, but, on the other hand, left everything in that connection wholly to the discretion of his agent, French." (2) The release of the indemnity mortgage, and failure to take any other. (3) Neglect to heed admonitions of French's waning finances and consequent embarrassment. (4) Negligence in sending discharges to French, and omission to require account of the same. (5) Failure to know that mortgages were foreclosed and bid off by French without payment to the estate. (6) Omission to collect past-due paper and interest. (7) Report in annual accounts of mortgages which had in fact been discharged or foreclosed, and wholly lost, or paid to French. (8) Consent to reduction of the rate of interest on mortgages. (9) Failure to give personal supervision to Ogemaw loans. (10) Same as No. 3. (11) Leaving $1,000 due estate in hands of French, and accepting worthless bank stock as security for same. Contestants' stances in support of these claims.

Counsel for the contestant have called attention to a large number of specific items upon which they claim loss. Upon the other hand, counsel for the complainant confine their discussion to the general question of whether there has been a loss, without attempting to show that the testimony does not sustain the claims of opposing counsel as to these items. It seems to have been conclusively proven that the mortgages represented by these items came to the hands of the executor, and that they were not paid, and we find nothing to indicate that the loss was made good to the estate by the executor. It is clear that the estate's money went into these items, and never came out, and was therefore lost, with the interest that it should have earned. We cannot escape the conclusion that Mr. Gruner was exceedingly lax in his supervision of these dealings. Apparently, he had occasional periods of anxiety, but appears to have done nothing more than to urge French to collect, and to have implicitly believed and relied upon his representations in all things, or to have lacked the force of character to control or supersede him. Consequently he was cheated by French in various ways. Worthless land was imposed upon him, excessive loans were made, collections were not reported, and in various ways the estate was depleted. The losses upon the earlier securities may have been in part due to a shrinkage in values, for which neither Gruner nor French was to blame, but this does not excuse losses upon later loans. We think that the contestants have just cause to complain, and are not surprised at some impatience upon the part of the beneficiaries, who confront the condition of a large fortune lost through the coincidence of French's want of honesty and Gruner's inattention to his duty. The claim that these losses were compromised by H. P. Ellis is not sustained in the proof. What he did was done with the approval of Gruner, and resulted to his advantage. The claim that the annual accounting precludes inquiry into these losses, upon the ground that they were adjudications approving what had been done, and thereby binding the estate, should not prevail. These annual reports consisted of credits to the administrator, and charges against him. So far as his disbursements are concerned, no doubt, the allowance of items bound the estate; and his statement of assets ought not to bind the estate if he did not have them, or to cut off his responsibility if, owing to his negligence, they should prove worthless or not be collected. It now appears that he did not have all of the securities claimed, and that some of them were not worth what they were charged as representing, and that this was in whole or in part due to his negligence. It is therefore proper to investigate them, with a view to

Digitized by Google

which all of these items shall be tested. Manifestly, Mr. Gruner was not to blame for the taking of mortgages prior to his appointment. He is responsible for no loss in collecting them, unless due to his want of reasonable diligence. He should not be expected to make good shrinkages due to financial fluctuations, unless his want of diligence in omitting to collect earlier is a factor. On the other hand, he should have known when money became due, and whether it was paid. He should not have left it in the hands of French for any considerable periods, if he could reasonably make other use of it. If not, it might not be negligence, unless he had reason to fear his insolvency. If he knew that French was overburdened and financially embarrassed, he should have taken steps to ascertain what, if anything, was due the estate, with a view to securing it. He should have kept the securities in his own possession, and have kept track of them when sent, with discharges, to French. He had some responsibility in relation to titles and values. Few men would have so fully and implicitly trusted so large interests to another for so long a period. Yet not a shadow of suspicion of Gruner's entire honesty of purpose is discoverable. He was evidently a confiding old man, a good citizen, worthy of better treatment and a better fate; and it is regrettable, and doubtless regretted by all concerned, that more consideration had not been shown him by those interested in pressing this claim against him, and their advisers and friends.

Counsel for the contestants have classified and tabulated the alleged losses as follows:

Items lost, but continued in account of 1898	$ 9,962 64
Losses through unauthorized settlements	1,679 02
Losses through taking junior mortgages	8,303 60
Investments on inadequate security	5,984 85
Losses from neglect to collect interest	849 95
Money collected by French and kept by him	1,157 31
Decrease in value accompanied by neglect to collect	1,926 00
Taxes paid on securities	223 17
Thayer mortgage matter	150 00
Interest on omitted items	676 53
Interest on unaccounted balances	736 08
Total	$31,649 15

They ask that the account be surcharged with these items.

First Class.

The following items had become wholly lost to the estate before January 1, 1898, through the acts of Mr. Gruner, as executor, in discharging and thus losing the liens of said mortgages in some cases, and in foreclosing and thus losing the securities and property to the estate in others, as the several properties upon which such securities rested never became the property of the estate, namely:

1901	229 36	
		$ 1,012 74
The Stocking mortgage, appearing in Mr. Gruner's report January 1, 1898 (discharged by Mr. Gruner August 23, 1897). Amount actually due thereon July 1, 1899	$ 815 00	
Interest to April 5, 1901, at 6 per cent.	61 12	
		876 12
The Darland mortgage, appearing in Mr. Gruner's report of January 1, 1898 (discharged by Mr. Gruner May 13, 1898)	$ 356 99	
Interest to April 5, 1901, at 6 per cent.	64 20	
		421 19
The Rose Arnold mortgage, appearing in Mr. Gruner's report of January 1, 1898 (discharged March 25, 1896, by Mr. Gruner). Due July 1, 1899	$ 650 66	
Interest to April 5, 1901	16 62	
		667 28
The Woodweiss mortgage, appearing in report of January 1, 1898 (foreclosed and sold April 7, 1894, bid off by French in his own name, and sold by him to Holdred). Principal April 25, 1899	$ 325 00	
Interest to April 5, 1901	490 00	
		815 00
The Morrison mortgage, appearing in report of January 1, 1898 (discharged Oct. 22, 1896, by Mr. Gruner). Amount due November 1, 1894	$ 400 00	
Interest to April 5, 1901, at 8 per cent.	202 66	
		602 66
The Charles Woods mortgage, appearing in report of January 1, 1898 (discharged in 1893 by Mr. Gruner). Amount due June 28, 1898	$ 58 43	
Interest to April 5, 1901	11 72	
		70 15
The George Struble mortgage (discharged June 30, 1898). Discharge recorded and security not brought into any report of Mr. Gruner subsequent to such discharge. Amount due at time of discharge	$ 187 25	
Interest to April 5, 1901	29 95	
		217 20
Daniel W. Benjamin farm, appearing in the report of January 1, 1898. This mortgage was given in 1886 for	$1,500 00	
Interest accumulated to Jan. 1, 1898	900 30	
Int. to April 5, 1901	400 00	
		2,800 30
The Peaver mortgage, appearing in the report of January 1, 1898	$1,200 00	
Interest accumulated to April 5, 1901	1,280 00	
		2,480 00

Second Class.

Mortgages were settled by Mr. Gruner, without order of court or authority of law, for less than was due, and the estate lost the following amounts, respectively, thereon:

Rogers mortgage	$ 76 27
O'Connor mortgage	56 99
Burwell mortgage	204 62
Woughter mortgage	42 64
Mead mortgage	139 84
Peters mortgage	46 14
Kaltz mortgage	27 22
Parliament mortgage	24 19
Shellito mortgage	74 01
Decker mortgage	52 48
Decker mortgage	298 83
Schaible mortgage	539 66
Chambers mortgage	96 13
	$1,679 02

—With 6 per cent. additional interest from September 1, 1900, to date of payment.

Digitized by Google

Mortgages upon which loss resulted from loaning money upon junior mortgages or defective titles:

Peach Lake and Furze farm loss	$ 6,525 16
Marden mortgage loss	398 50
Hamilton mortgage loss	598 76
Goslin mortgage loss	579 26
Rentschler mortgage	201 82
	$ 8,303 60

Fourth Class.

Losses by loaning upon insufficient security:

Stevens mortgage	$ 100 96	
Stanley mortgage	492 04	
Hacht mortgage	2,050 00	
Peach Lake and Furze farms	6,525 16	
Rentschler mortgage	201 82	
Marden mortgage	398 50	
(The last three items occur in the last above given.)		
Goslin mortgage	579 26	
Zimmer House mortgage	211 05	
C. P. Walker mortgage	413 34	
L. F. Smith mortgage	398 24	
Tranzo mortgage	148 98	
Beach mortgage	305 96	
Tawas Bank stock	1,285 00	
		$13,110 31

Fifth Class.

Losses resulting from negligence in collecting interest, and allowing it to accumulate to a point beyond the value of the property:

Abbott cottages	$219 71
O'Clair mortgage	175 95
Hayes mortgage	119 71
Tscheirhart mortgage	177 58
Stevens mortgage	100 96
(The last item being also included in the list last above given.)	
A. Abbott mortgage	157 00
	$950 91

Sixth Class.

Money collected by French, as agent or attorney of said Gruner, and allowed to remain in his hands, resulting in losses to the estate from that cause:

McCrimmon mortgage	$ 68 39
Huston mortgage	58 47
Ranger mortgage	35 20
Link mortgage	32 07
Reed mortgage	73 13
Rohl mortgage	92 89
Jones mortgage	156 99
Maurer mortgage	373 86
Meir mortgage	65 57
J. P. Benjamin mortgage	47 86
Freed mortgage	26 38
Abbott Block rents	126 40
	$1,157 31

Seventh Class.

Losses on loans made by Ellis which became insufficient security because of decrease in value of property.

Ostrum mortgage	$1,926 00

Eighth Class.

Moneys paid for back taxes and tax deeds upon lands covered by mortgages belonging to the estate, such payments and purchases having been made to protect the interest of the mortgagees because the several amounts paid for these tax deeds and back taxes were upon property where the security held by the estate was already more than ty rested:

Abbott cottages	$ 6 25	
Green house	6 30	
Goslin house	4 08	
Goslin farm	11 55	
Goslin farm	14 07	
Hiram Brooks farm	24 60	
Hiram Brooks farm	32 05	
Opera house	15 42	
Shellito house	8 93	
La Point house	5 29	
E. and J. O'Clair	26 35	
E. Hayes	16 71	
C. J. McCrimmon	12 20	
C. Beakney	22 05	
C. Rentschler	4 60	
L. Smith	11 26	
		$223 1[illegible]

Ninth Class.

Thayer mortgage matter	$159 [illegible]

Tenth Class.

Interest on two omitted items:

$131.08 from Oct. 1, 1899	$120 28	
$705.45 from Jan. 1, 1891	556 15	
Total		$676 [illegible]

Eleventh Class.

Defendants object to the allowance of the item credited to said Gruner as a disbursement to complainant Cheever during the years 1898 and 1899, amounting to $736.08, because complainants have not furnished defendants with an itemized list of said account, as asked for in defendants' exceptions, and, in the absence of such itemized statement, these defendants claim the court should disallow the whole bill.

The amount that defendants ask to have the executor's account surcharged with under this item is	$ 736 08

Recapitulation of Losses.

Total loss enumerated under subdivision 1	$ 9,962 64
" " " " " 2	1,679 [illegible]
" " " " " 3	8,303 60
" " " " " 4 (less three items in subdivision 3)	5,984 35
Total loss enumerated under subdivision 5 (less item of Stevens mentioned in subdivision 4)	849 95
Total loss enumerated under subdivision 6	1,157 31
" " " " " 7	1,926 00
" " " " " 8	223 17
" " " " " 9	150 00
" " " " " 10	675 53
" " " " " 11	736 08
	$31,649 15

For convenience, we will consider the items referred to in classes as suggested in the brief. The first class contains a list of mortgages for which the executor claimed credit in the account of 1898. That fact need have no especial significance for the present purpose, the more important inquiry being whether the estate is given credit for them in the account set up in the bill. We do not discover that complainants' brief claims this.

First Class.

(a) Simms Mortgage. As to this, complainants' counsel stated on the hearing that he thought it was not included by them as an asset. This was given July 5, 1895, for $675. It was well secured. Interest was 9 per cent. In the annual account of 1898, Mr. Gruner reported this mortgage as a credit $783.38, and in September 1899, $834.35 as

Digitized by Google

lue thereupon. The lesser sum is taken. On January 15, 1897, he executed a discharge of this mortgage, and sent it to French. It was recorded January 17th. Either the amount of this mortgage was paid over to Gruner, and should not have appeared in the account, or it was not reported, and the money was with French. We understand that French never paid it over, or otherwise accounted for it. It was negligence to leave this matter unsettled from January 15, 1897, and it should be charged against the executor at the amount due January 15, 1898; that being the sum chargeable against French. Interest should be added to the legal rate from that date.

(b) The Stocking Mortgage. This was given June 15, 1888, for $500, for five years, at 10 per cent. It covered a house and lot in West Branch. Interest for four years and $35 was paid upon it. On August 23, 1897, the mortgage and discharge were sent to French, and the latter was at once recorded. Gruner testified that he never received payment of it. He reported it as an asset in 1898.

$693.50.	Amt. due Jan. 1, 1898	$815 00
	Int. to April 5, 1901	61 12
		$876 12

This item should be allowed, with interest at the legal rate after September 1, 1897, on amount then unpaid.

(c) Darland Mortgage. This was reported in January, 1898, at $356.99. It was given for $300, on 40 acres, April 13, 1891, 8 per cent. French became owner of the land by purchase, and asked for a discharge of this mortgage, which was sent June 13, and recorded June 25, 1898. He then sold to Smith, and took back a mortgage to the Ellis estate for $410, and this was turned over as a new loan, independent of the Darland loan. The Darland loan was lost.

Due Jan. 1, 1898	$356 99
Int. to April 5, 1901, 6 per cent	64 20
Total	$421 19

This should be charged against the executor at the amount due June 25, 1898, with legal interest from that date.

(d) Rose Arnold Mortgage. This mortgage was given March 30, 1890; $800; interest, 9 per cent.; discharged March 8, 1895. Nothing was ever paid upon it, and Gruner did not know the facts regarding its disposition until after the failure of French in July, 1898. He never inquired about it. Counsel claim as follows:

Due July 1, 1899	$650 66
Int. to April 5, 1901	16 62
	$667 28

Like the former mortgages, it should be allowed at the amount due March 8, 1895, with lawful interest from that date.

(e) Woodweiss Mortgage. This mortgage drew interest at 10 per cent. It was foreclosed and the land sold to French, April 7, 1894. He sold it to Holdred in January, 1898. Only three years interest was r ized. The sheriff's deed was reported Gruner in 1894, but he did not pay furt attention to it, and French appropriated The executor should be charged with amount received by French upon this la with interest at the legal rate from date such sale.

(f) Morrison Mortgage. This was a m gage for $400, November 1, 1890. It v discharged October 22, 1896. No part principal or interest was paid, and all v lost. French collected it, and never accou ed for it. Contestants claim as follows:

Due Nov. 1, 1894	$40
Interest to April 5, 1901, 8 per cent	20
	$602

The executor will be charged with t amount due upon November 1, 1894, with terest at stipulated rate to October 22, 18 and lawful rate on the amount from th date.

(g) Chas. Woods Mortgage. This was giv for $1,000 June 6, 1885, 10 per cent, runni three years. A discharge was recorded Se tember 27, 1893. French continued to p on this as late as 1898. In September, 18 account, he states that principal and intere were collected by French. Previously it w always reported as an asset, and in 1898 $475.87.

Amount claim to be due June 28, 1898	$58
Interest to April 5, 1901	11
	$70

The amount collected (i. e., $58.43) shou be charged executor, with interest at leg rate from June 28, 1898.

(h) George Struble Mortgage. Mortgage f $175. Discharged June 20, 1898. Stated have been discharged in his 1899 accoun but no debit for proceeds.

Due at date of discharge	$187
Interest to April 5, 1901	29
	$217

This item should be allowed.

(i) Benjamin Mortgage. $1,500; 10 pe cent.; 1886. This mortgage was foreclose by Gruner's direction, and bid in by Frenc on October 24, 1891, in his own name. Noti ing was paid by him. He took possessio at once, and mortgaged the entire 160 acre to Knight for $1,400. He then sold 40 acre to Parliament, and procured a release fro the Knight mortgage. Gruner first learne these facts, after the failure, through H. F. Ellis. French then deeded the 120 acres t the Ellis estate, subject to the Knight mort gage, upon which nothing had been paid. Claimed:

Principal	$1,500 0
Int. to Jan. 1, 1898	900 3
Int. to Apr. 5, 1901	400 0
	$2,800 3

This item will be charged against the executor at the amount realized by French from his mortgage and sales, with interest at lawful rate from dates of said mortgages and sales.

Digitized by Google

8 per cent. On June 8, 1893, Gruner sent French a discharge, which was recorded June 10th. It appears that French had purchased the land from Peaver, and, after recording the discharge, traded it for other property. Mr. Gruner reported this regularly as an existing mortgage, and in 1898 account at $819. He never received any money upon it, and testified that he made no inquiries about it; that he knew that more than $2,000 was due upon it, did not know what had become of the property, and had never examined to see. When French sold the land after acquiring an unincumbered title, as stated, he took back a mortgage from Link, the purchaser, to himself, for $620. This mortgage he sent to Gruner as an independent loan. Gruner testified that it was probably in settlement of account, but was not to pay anything upon the Peaver mortgage, and the estate has realized nothing upon the Peaver mortgage. Amount claimed is:

Principal	$1,200
Interest to April 5, 1901	1,280
	$2,480

This item should be charged to the executor at the amount due June 10, 1893. Interest should be computed at legal rate from that date.

From the foregoing it appears that in seven instances he sent discharges, and in two instances permitted foreclosures, without knowing that French had converted the property. This covered a period of 10 years—the first being in 1888, and the last in 1898—and it caused a loss to the estate of more than $9,000.

Second Class.

The items contained in this class consist of alleged errors or concessions in settlement. The proof consists mainly of the testimony of Babbitt, who testifies to computations and losses. It does not satisfactorily appear how these discrepancies arise in the various cases. Many of the transactions involved are remote in point of time, and, if they were concessions, we are not satisfied that they were not wisely made. The items in this class will be disallowed.

Third Class.

(a) Peach Lake Mortgage. After discharging the indemnity mortgage, Mrs. Ellis took two mortgages on the Peach Lake farm and other properties, including an opera house in West Branch, in the deal relating to the copartnership. Gruner afterwards bought these mortgages for the estate, paying $7,750 for the same, besides some interest. The small properties were released at some stage of the proceedings, but it is not shown when. After French failed, H. P. Ellis learned that there was a prior mortgage of $1,- to the estate. At the same time Ellis, who had learned that title to several farms upon which the estate held mortgages inadequately secured, induced French to quitclaim them and the opera house to the estate, the deed providing that the mortgages should not merge. It was afterwards learned that he had previously deeded the opera house to other parties. This left the security for the two $5,000 mortgages as follows: One was second to a $1,500 mortgage on the opera house, and the first mortgage on Peach Lake farm. The other was third on the opera house, and second on the farm. Ellis threatened to cut off the purchaser of opera house by a foreclosure, and French procured some friends to take Ellis lien on opera house and deed the estate four houses and lots, which afterwards netted the estate $725. The homestead sold for $800. There was a mortgage given on a portion of this farm by Furze to the estate in 1888 for $1,900, and was found to be subject to a prior mortgage amounting to $417. Counsel figure that the Peach Lake farm cost the estate $11,525.16, and was worth but $5,000.

(b) Marden Mortgage. $300; 8 per cent.; given March 9, 1895. Nothing was collected upon this mortgage. It was a second mortgage, the first being afterwards bought by Gruner for $263.97. A loss of nearly $398.50 is claimed. We are not advised whether any attempt was made to collect it. Gruner left the matter wholly to French.

(c) Hamilton Mortgage. $500. This was a third mortgage. The land was sold on foreclosure of the second mortgage, and the Ellis security was thereby lost. Gruner held this mortgage from 1892 to 1897, and took no action, though informed in 1897 by letter that it was a third mortgage. The claim was lost.

Principal	$500 00
Interest	98 75
	$598 75

The Goslin Mortgage. Given November 13, 1894; $600 on house and lot and 40 acres of land. There was a prior mortgage on the land, and tax titles on the house and lot. Gruner bought these. Only $42 was realized on this property.

Rentschler Mortgage. $300; 8 per cent.; dated March 9, 1895. This was a second mortgage, and nothing was collected upon it. Gruner bought the first mortgage for the estate, and paid $293.97. The estate lost about $400 in the transaction.

It is a perplexing question to know what justice requires as to this class of securities. It was prudent to close out the copartnership matter, and it has been fortunate that it was done, as the consequences would have been serious, had it continued. Even at that time French was deceiving his benefactors, as is shown by the transaction. The indemnity

Digitized by Google

mortgage was surrendered at that time, but, while it may have provided security for the Ellis interests, its chief purpose appears to have been to indemnify him in copartnership matters. This transaction had the approval of Mrs. Ellis and H. P. Ellis, who was at that time old enough to be counseled with, though not of age. We think the claim upon the Peach Lake farm matter should be disallowed, except as to the loss upon the Furze mortgage. The Marden claim will also be disallowed, it appearing that this farm was traded for the Klacking farm. The other items, including the Furze farm mortgage, will be allowed, with simple interest upon the respective loans at the legal rate, after deducting amounts paid.

Fourth Class.

(a) Stevens Mortgage. The Stevens mortgage was given originally for $350. We do not readily find the date, owing to a mistake in the index, but it had increased over $200 upon July 20, 1898. It was finally sold by H. P. Ellis for $450, and the testimony indicates that this is all that it was worth.

(b) Stanley Mortgage. The record shows a loss on this mortgage of $140.19. See statement of Babbitt on page 1425 of the record. It was on plains land.

(c) The John Hacht Mortgage. This was given September 12, 1887, for $2,000, and ran five years. Interest was allowed to accumulate as follows:

In 1888	$ 9 00
In 1889	189 00
In 1891	234 00
In 1892	368 00
In 1893	368 44
In 1894	428 44
In 1895	688 00
In 1896	742 00
In 1897	882 00
In 1898	1,022 00
In 1899	1,171 39

Mr. Gruner admits that he had never seen this land until 1897 or 1898. This mortgage is still unpaid. Contestants claim a loss of $2,050.

The Peach Lake and Furze, Marden, Goslin, and Zimmer mortgages have been considered elsewhere.

Zimmer Mortgage. $500; 3 years; given November 17, 1896; 8 per cent. French owned a house and lot. Zimmer was his hired man, who, to accommodate French, accepted a deed, and gave mortgage to French, who turned it over to Ellis estate for money out of the estate, and then Zimmer deeded back to French. Security was inadequate, and resulted in a loss of $211.05.

The C. P. Walker Mortgage. $300; 7 per cent.; dated December 12, 1896. French had owned this land, and, after taking off the timber, had deeded it to Walker, without other consideration than this mortgage. French then let Gruner have it in place of moneys collected for the estate. It was upon plains land, which was worthless, and upon which Gruner had instructed not to loan any more money upon. The en lost, it is said.

L. F. Smith Mortgage. We l to this mortgage in connection w land mortgage, and we judge f timony of H. P. Ellis that it is c

The Tranzo mortgage, given 1894, for $100, at 10 per cent., w land. Nothing has been realized

The James Beach mortgage w $450, on 40 acres of land, May 7, ner never saw it, and the proof it was poor land. Taxes and i allowed to accumulate until amounted to $566.32. It is clai caused a loss of $300. Counsel what has become of this mortg

Tawas Bank Stock. In 1895 been allowed to retain for two ye $2,000 which he had collected fo Gruner then took from French, f it, a demand note, taking as se stock in a Tawas bank. This wa the interest, amounting to $1,2 testified that he expected that i paid soon, but nothing was eve it, and it does not appear that he lect it. The stock was or afterwa worthless.

These items should be allowed, Peach Lake and Furze, Rentsch and Goslin claims, which have be and passed upon in another cla Stevens, Stanley, Zimmer, Tranzo, Tawas Bank stock items, as we isfied that the acceptance of these gent. The item of the Hatch should be allowed at $1,171.39, the amount of interest which ha lated in 1899, with interest from t

Fifth Class.

These items are based on fail lect interest.

(a) Abbott Cottages. A mortga was taken in 1887 upon these c drew 10 per cent. in 1898. F French in possession, and $634 ba upon the mortgages. He took the from French, and sold them at loss of $219.71 to the estate. On r witness stated that on those sold t loss of $135.33.

(b) The O'Clair mortgage was gi 30, 1885, for $300. It was permit for 10 years without any paymen closure. A loss of $175 is claimed.

(c) The Hayes Mortgage. Give March 16, 1886. No interest was 1893. It was foreclosed in 1898, by French in his own name, wi ner's knowledge. Gruner admits $110.85. Contestants claim $11 might have been foreclosed earlie are not satisfied that it would hav differently, owing to the condition c ket for lands. We think this sho charged against the executor.

Digitized by Google

March 30, 1889, on 40 acres, for $140. It ran nine years without payment, and Gruner had forgotten that he had it until H. P. Ellis learned of it at West Branch. French sold this land to Kennedy upon a contract receiving $425.

Abbott Mortgage. Given July 18, 1887, on several cottages. Amount, $1,200. French obtained title early in nineties, and collected the rent, and paid neither rent nor interest.

With the exception of the Hayes claim and Abbott cottages, these should be allowed, with simple interest at the legal rate from date of settlement. It is not made clear to us how contestants are entitled to rent of cottages, when they are allowed for interest on the mortgages.

Sixth Class.

This class consists of moneys collected by French and never accounted for.

McCrimmon Mortgage. McCrimmon mortgage was compromised in 1898 by Ellis, in consequence of receipts held by him, for $68.-39 loss to the estate.

Huston Mortgage. Given March 15, 1884; $300 at 10 per cent. One hundred and fifty-four dollars paid, not accounted for. Loss of $32 of interest paid French, and not accounted for.

Ranger Mortgage. Given March 15, 1884; $300; 10 per cent. Thirty-two dollars was paid French, and not accounted for. Amount claimed, $35.20.

The Link mortgage has been referred to in connection with the Peaver mortgage. It was for $410. $29.70 interest was paid to French and not accounted for. Amount claimed, $32.07.

Hiram Reed Mortgage. Given June 6, 1890; $155. H. P. Ellis found that this had been largely paid to French, and not accounted for. He adjusted the matter at a loss, which he states to have been $65.83.

The Rohl mortgage was given June 6, 1894, for $200—a second mortgage. This was partly paid to French. Ellis settled at a loss of $86.01. Amount claimed, $492.89.

Jones Mortgage. Given November 4, 1892; $675, for five years, at 8 per cent. In 1898 Gruner reported amount $794.10. Taxes were back amounting to $24.81. French had made some collections. Ellis settled at a loss of $140.19. The claim is now for $156.-99.

Maurer Mortgage. Claim, $373.86. It was adjudicated to have been paid to French, and was canceled.

The Jacob Mier mortgage was given to Joseph P. Ellis for $600. At his death $40.17 was due for interest, and it was so inventoried. The estate lost $65.67, according to Ellis' computation, through a failure of French to pay over collections made upon it by him.

Abbott Block Rents. It is claimed that the rent for this property was lost, to the amount of $125. We do not find proof warranting an allowance of this item. It was referred to in another class.

J. P. Benjamin. This mortgage was settled in 1893. It is claimed to have been settled at a small loss. It does not appear why this was done, though counsel undertook to explain it. Counsel have not alluded to it in their brief. This mortgage was taken by Ellis, and loss is not satisfactorily explained. It will be disallowed.

Freed Mortgage. This is said to have been settled for $22.75 less than amount due, and the loss is charged. We do not discover a denial or explanation. It should be disallowed.

Seventh Class.

The Ostrum mortgage was taken in 1894 by Ellis for $800, at 10 per cent. Two years' interest was paid to Gruner. Testator collected interest for the first year. Nothing was paid afterwards. It was plains land, and Gruner testified that he found out before 1890 that it was not worth foreclosing. He learned so from French. It is claimed that it was collectible in 1890, but we are not convinced that this is so. Contestants are asking pay for losses occasioned by taking mortgages upon plains lands, and at the same time claiming damages for a failure to collect a similar mortgage taken by the testator. We think this claim should not be allowed to them.

Eighth Class.

These claims are for taxes paid upon lands covered by securities, all of which are alleged to be inadequate. We think that few are valid claims. The following should be allowed:

Goslin house	$4 [illegible]
Goslin farm	11 [illegible]
Goslin farm	14 [illegible]
McCrimmon	12 [illegible]
Rentschler	4 [illegible]
Smith	11 [illegible]
Total	$[illegible]

Ninth Class.

The Thayer mortgage was recovered in payment of money collected by French. In his bookkeeping he took credit for $150 as a disbursement, as though he had paid that amount to French. This was an error, and we see no reason why the item should not be allowed to contestants.

Tenth Class.

These claims are for interest on items omitted from Gruner's account—one in 1891 and one in 1899. He had the money, and it is charged now to him in his account. Simple interest should be allowed upon them.

Eleventh Class.

Amount paid Cheever. This is a technical claim, and should be disallowed.

H. P. Ellis went to Ogemaw county in 1898, and at that time obtained from French, for the estate, certain deeds of property upon which the estate held or previously had mort-

so deeds of other property to make up for defalcations. He also received from Gruner securities claimed to amount to upwards of $60,000, of the assets of the estate. It is important to ascertain whether any of these should be applied in reduction of the losses for which we have allowed contestants. So far as the $60,000 of securities are concerned, they were assets of the estate, for which the estate should have had a corresponding credit, if it did not, and ought not to be used to offset losses on other securities. We are not impressed by the claim that H. P. Ellis caused the failure of French. It is evident that it was time something was done to secure his estate, and that French must have failed whenever that should have been done. Ellis went to West Branch July 12, 1898. He took with him a list of securities obtained from Gruner. Cheever followed as soon as he learned of the failure. They secured some conveyances from French. Subsequently they secured a deed of what are called the "Stanley lands." They also obtained a deed of the French homestead.

The Stanley Lands. These lands were given upon a provision contained in the deed that they should settle the Benjamin, Peaver, and Maurer mortgages. Ellis accepted the deed upon certain representations, which were untrue, and immediately tendered back a conveyance, which was not accepted. The estate never claimed these lands, and has no equitable claim upon them, in view of what passed. We sustain the contestants' contention that the conveyances received were not in settlement of any claim against or liability of Gruner. They were taken by him, through his agents, as security for the protection of the estate.

Ellis found titles in French to premises upon which the estate had mortgages. Several of these have been mentioned. He induced French to deed these over, and manifestly the proceeds should apply on such securities, and surplus if any, should apply on other debts of French. The properties thus transferred were: (1) Abbott cottages. (2) Green house. (3) Zimmer house. (French testified that the mortgages on these equaled or exceeded the value of the property.) (4) Times Block. (5) Post-office property. (6) Tinlan farm. (7) Peach Lake farm. (8) Furze farm. (9) Hacht farm. (10) James Beach farm. (11) Rentschler farm. (12) Benjamin farm. (13) O. B. Stevens house. (14) Marden farm. (15) Stanley lands. (16) Boynton lands. (17) French home. The Times Block claim was admittedly $3,301.96 in 1899. The testimony shows that it is worth no more. The estate had in the post office in 1899 $1,089.56. It was shown to be worth little, if any, more. The claim on the Tinlan farm in 1899 was $2,542.13. We think this was all that it was worth. We have already seen that losses were sustained on the Peach Lake farm, Furze farm, Hacht farm, farm, Stevens house, Marden farm, and Stanley land. Of these the estate is allowed for its losses in the following: Furze farm, Hacht farm, Beach farm, Rentschler farm, and Benjamin farm. It would seem, therefore, that it should convey such of these as it owned at the time this hearing was had to the complainants.

The Boynton Lands. These lands were deeded to Gruner in trust "to be used to pay any indebtedness by said Myron French to Gruner and to the estate of Ellis, the Ann Arbor Savings Bank, Mrs. Markham, and Jennie E. Cheever." Boynton and Morley deeded the same lands to Gruner, but not in trust. All of this was done at the instance of French, who assigned a land contract for them to Gruner. The latter was a warranty deed, and the former a quitclaim Gruner afterwards deeded an undivided half to Cheever, without mention of a trust. French was indebted to all of the persons mentioned, and owed large sums to both Gruner and Cheever. We think complainants cannot now claim the benefit of these lands as an asset of the Ellis estate, but are entitled to any interest that such estate might otherwise have claimed. The French homestead was taken in settlement of the Peach farm and opera-house claims, and has been applied upon them. The amount of these various items will be determined upon the settlement of the decree if counsel cannot agree upon them, and the account will be surcharged therewith.

Where the term "legal interest" is used, it is intended to mean interest at the rate of 6 per cent.

Defendants will recover costs of both courts. The other Justices concurred.

PAYE, Village Treasurer, v. **GROSSE POINTE TP. et al.**

(Supreme Court of Michigan. Oct. 12, 1903.)

MUNICIPAL CORPORATIONS — STREET IMPROVEMENTS—BONDS—PAYMENT OF PROCEEDS — STATUTES — TITLE — CONSTITUTIONALITY—LOCAL SELF-GOVERNMENT.

1. By Act 1901 (Loc. Acts 1901, p. 65, No. 303), a township board was authorized to improve a certain street and to issue bonds therefor. Thereafter, by Act May 28, 1903, complainant village was created, and included within its limits a part of the road so to be improved, and such act declared that the amount raised by the sale of the bonds, with accretions, should be paid over by the township authorities to the village treasurer. *Held*, that since by the change in the political authority over the territory the village authorities became the only ones in control of the highway, and authorized to expend the money raised thereon, such act was not invalid as a violation of the right of local self-government.

2. The title of Act 1903, "An act to incorporate the village of Fairview in the township of Grosse Pointe, Wayne county," was sufficient to cover a provision for the expenditure of a fund previously raised by the township for the purpose of improving a street within the village.

Digitized by Google

urer of the village of Fairview, against the township of Grosse Pointe and others, to review an order directing the payment of certain funds by defendant. Affirmed.

Moore & Moore, for relator. James H. Pound, for respondents.

MONTGOMERY, J. This is certiorari to review mandamus proceedings. In 1901, by Local Act No. 303, the Legislature authorized the township board of the township of Grosse Pointe to declare it expedient to grade or otherwise improve Jefferson avenue and Mack avenue, in said township, in a certain manner, and to cause estimates to be made of such improvement or improvements, and to fix the amount necessary to be raised for the purpose of such improvements, and the amount necessary to be raised by the issue and sale of bonds of said township for that purpose. It then provided for a vote of the electors upon the proposition for an issue of the bonds to the amount determined. Action was taken upon this by the township board, and the proper amount to be used in paving each particular street and each portion thereof was specified. Bonds were issued and sold to the amount of $176,890. The board thereafter contracted for paving, except that portion of Jefferson avenue lying between the easterly limits of the city of Detroit and the Cadieux road, now in the village of Fairview, and as to that particular piece of pavement they have done nothing. On May 28, 1903, the Legislature passed an act creating the village of Fairview. By the terms of this act the whole of Jefferson avenue between the easterly limits of the city of Detroit and the Cadieux road is within the corporate limits of the village. The act provided that the amount raised by the sale of the bonds of said township of Grosse Pointe, together with all accretions thereon by way of interest or otherwise, should be paid over by the township authorities to the village treasurer. The mandamus below directed the village authorities to comply with this requirement of the statute, and it is to review this order that this action is brought.

It is contended by defendant that this act is unconstitutional, as in violation of the right of local self-government. There is no doubt of the legislative power to designate the authorities which shall expend highway moneys, and there is no longer any inhibition from withdrawing this power from the highway commissioner. Campau v. Highway Commissioner (Mich.) 93 N. W. 879. The only question about which there can be any doubt is whether this money can be withdrawn from the township as a distinct political organization, and turned over to the authorities of the village. We are satisfied that this was entirely competent for the Legislature. This fund was raised for a specific purpose. The change in the political authority over this territory, by which the village authorities became the only ones who have control of this highway, and the only right to expend the money upon it, render it not only competent, but essential, that the fund shall be placed in the hands of the authorities having the power to expend it. It is claimed that the provision for the expenditure of this fund was not within the title of the act, but we think the purpose was sufficiently indicated by the title. People v. Mahaney, 13 Mich. 481; Messenger v. Teamen, 106 Mich. 654, 64 N. W. 499; Soukup v. Van Dyke, 109 Mich. 679, 67 N. W. 911.

It is further claimed that the order of the court compels the payment by the defendant of money in excess of the amount in its hands. Upon that subject the return of the circuit judge shows the following: "Thereafter testimony was taken showing that the facts and figures in regard to amounts were correctly stated in the petition for mandamus, and counsel for the petitioner submitted a computation showing the amount he claimed was due the petitioner under the facts alleged in the petition, and this computation was submitted to counsel for the respondent, who pointed out no errors therein after sufficient opportunity therefor, and the amount so fixed was $86,256.90, including interest up to August 3, 1903. But it was claimed for and on behalf of the respondents that they were entitled to deduct from said amount the legal expenses which they (the respondents) claimed to have incurred in litigation and inspection and preliminary surveys over the pavement of Mack and Jefferson avenues; but it was claimed on the part of the petitioner that he was entitled to the whole amount of said last-mentioned sum, without any deduction whatever, and particularly without any deduction for costs and expenses of litigations. The respondents were unable at that time to state the exact amount of money they had expended, and the amount of liability they had incurred in said litigations and inspection and preliminary surveys, but they stated that the amount would not exceed $5,000, and that $5,000 would be a sufficient sum to retain in their hands for their protection on account of the money so expended and the liability incurred."

The order of the circuit judge is affirmed. The other Justices concurred.

GROSSE POINTE TP. v. FINN.

(Supreme Court of Michigan. Oct. 22, 1903.)

MUNICIPAL CORPORATIONS — TOWNSHIPS — BONDS—CREDIT OF CORPORATION—PLEDGE —STATUTES — CONSTITUTIONALITY — LOCAL SELF-GOVERNMENT—INFRINGEMENT.

1. Where a legislative act conferred on a township board authority to issue bonds and

Digitized by Google

2. Act 1903 authorized a township board to pave and gravel certain portions of a street within its limits, and for the purpose of defraying the cost authorized the board to issue and sell township bonds not to exceed a certain amount, and to raise each year, by taxation, a sum sufficient to pay the interest on the bonds, together with a further sum for a sinking fund to pay all bonds at maturity. *Held*, that since the township board was a representative elective body, and the duties prescribed by the act were germane to those previously exercised by the board, the act was not unconstitutional, as an invasion of the right of local self-government, in that it did not require a vote of the electors.

Error to Circuit Court, Wayne County; Joseph W. Donovan, Judge.

Action by the township of Grosse Pointe against Matthew Finn. From a judgment in favor of plaintiff, defendant brings error. Affirmed.

Geer & Williams and H. R. Martin, for appellant. James H. Pound, for appellee.

MOORE, J. The Legislature in 1903 passed an act which authorizes the township board of the township of Grosse Pointe to pave, gravel, or otherwise improve a certain portion of Jefferson avenue within the limits of the township. For the purpose of defraying the cost of the work, the township board was authorized to issue and sell the negotiable bonds of the township to an amount not to exceed $25,000, and to raise each year by assessment on the taxable property in the township a sum sufficient to pay the interest on the bonds, and in the same manner such further sum as it might deem proper to raise for the purpose of providing a sinking fund with which to pay the bonds at their maturity.

The declaration of the plaintiff alleges that the township board has by resolution authorized the issue of $25,000 of bonds; that it advertised the bonds for sale; that the defendant was the highest bidder; that the plaintiff and the defendant entered into a written contract, whereby the plaintiff agreed to sell, and the defendant to purchase, the bonds for a stated sum; that the bonds were tendered to the plaintiff, and that he refused to receive them and pay the purchase price; and that as the result the plaintiff has been damaged, etc. The defendant demurred to this declaration, alleging that the act of the Legislature was unconstitutional for the reason that the act deprives the qualified electors of the township of their right to determine by vote, first, the improvements which shall be made by the township; second, the money which shall be borrowed by the township; third, the taxes to which they shall be subjected for the payment thereof; and therefore that said act conferred no authority upon the township board to make the contract for the sale of the bonds; also that the act does not expressly authorize credit of the township. The circuit judge overruled the demurrer, and held the act was constitutional. The defendant has sued out a writ of error to have the action of the circuit judge reviewed by this court.

Does the act give the board authority to pledge the credit of the township for the payment of the bonds? The authority conferred upon the board to issue the bonds and to sell them, and to have the proceeds thereof paid to the township treasurer, necessarily implies the right to pledge the credit of the township. 1 Dillon, Mun. Corp. § 127, and note.

The second question, whether the act is an invasion of the right of local self-government, and hence unconstitutional, is more difficult. In support of the contention that it is such an invasion, we are cited to cases of People v. Hurlburt, 24 Mich. 44, 9 Am. Rep. 103; Park Com'rs v. Common Council, 28 Mich. 228, 15 Am. Rep. 202; Ada v. Circuit Judge, 114 Mich. 77, 72 N. W. 35; Moreland v. Millen, 126 Mich. 381, 85 N. W. 882; and others. These cases undoubtedly hold that in relation to local affairs the Legislature may not withhold authority from the local authorities and confer it upon an outside agency. An examination of the cases will show they are very different from the one before us. In Township of Ada v. Circuit Judge the Legislature said that certain township and the county of Kent should raise the sum of $10,000 to be used in the construction of a bridge in violation of section 9, art. 10, of the Constitution, which requires a vote of the electors before so large a sum of money shall be raised by tax for such a purpose. In the other cases the Legislature itself undertook to appoint officers who should administer local affairs, or to authorize the Governor to do so, and it was held the state might not interfere and control by compulsory legislation the action of the local authority in matters exclusively of local concern. In the case at bar the act imposes the discretion to raise and expend the money upon a local board chosen by the electors of the district in which the money is to be raised and expended. In Commissioners, etc., v. Rush, 84 Mich. 154, 47 N. W. 676, the commissioners of parks were authorized by the Legislature to acquire lands for purposes named in the act, subject to the approval of the common council. The controller refused to sell the bonds because their issuance was not approved by the board of estimates. In the opinion written by Champlin, C. J., among other things it was said: "It is claimed on the part of council for respondent that the universal custom since 1802, when the town of Detroit was incorporated, has been to submit every item of expenditure to a meeting of citizens for dis-

Digitized by Google

has been preserved through different bodies, who have taken the place of the citizens' meeting; that therefore it is the design of the statute still to require every item of expenditure to be passed upon by some authority which represents the citizens' meeting of the early days of the municipality. It is true that this check upon the expenditure of money has been preserved in the legislation concerning the city of Detroit. It is doubtless, however, competent for the Legislature to provide that certain expenditures may be made upon approval of the common council, and it is competent also for them to abolish entirely the board of estimates, which has come now to represent the citizens' meeting." The controller was directed to sell the bonds. In Tillotson v. Saginaw, 94 Mich. 240, 54 N. W. 162, an act of the Legislature authorizing the common council of Saginaw to issue bonds was construed by the court, and it did not therein seem to be questioned that the Legislature might confer this right upon the common council without requiring the electors to pass upon the question. In Common Council v. Gow, 94 Mich. 453, 54 N. W. 170, the only question involved was whether the common council could authorize the issuance of bonds within certain limitations without a vote of the electors, and it was held it could do so. We understand that the charters in most cities and villages in the state contain like powers.

The remaining question is, can the Legislature confer the powers attempted to be given by the act upon a township board already in existence, and which was not elected in the expectation that it might exercise any such powers. Some light was thrown upon this question in Campau v. Highway Commissioner et al. (Mich.) 93 N. W. 879, and Campau et al. v. Township Board, Id. In that case certain powers over the highways heretofore exercised by the highway commissioner were withdrawn from him, and conferred upon the existing township board. Justice Montgomery, speaking for the court, said: "One question is made in the certiorari case which is not presented by the chancery record, but which is important to both cases, viz., whether the law is unconstitutional. It is contended that it is, and for the reason that it withdraws from the highway commissioner his functions, and that, as he is a constitutional officer, this cannot be done. Without expressing any view as to the validity of this act under the Constitution as it stood prior to amendment of 1899 (section 49, art. 4), we think that section is a sufficient and complete answer to the plaintiff's contention. It provides that the Legislature may provide for laying out, construction, improvement, and maintenance of highways, bridges, and culverts by counties and townships, and may authorize counties to take charge of any highways within their limits for such a purpose, and may duties of the township commissioners and overseers of highways. Language could not well be more plain, and we think it cannot be said that this constitutional amendment was intended exclusively to provide for a county road system. This may have been the prime object, but it in terms confers upon the Legislature authority to provide the laying out and maintenance of highways by townships as well as counties, and gives the broadest power to modify or abolish the powers and duties of township commissioners and overseers of highways." The case is not wholly in point, because the question of whether the money should be raised or not was submitted to the electors at a township meeting, and also because the precise question involved here was not raised there. As we have already stated, the township board is a local board, elected by the electors. It ordinarily represents the township. Its membership is made up of men whose duties are the most important of those discharged by any township officer, presumably calling for the highest order of intelligence and probity of any of the township officers. The new duties conferred by the act are germane to those heretofore exercised by the township board, and we think it was competent to confer upon them these new duties.

Judgment is affirmed. The other Justices concurred.

BARCLAY v. ABRAHAM et al.

(Supreme Court of Iowa. Oct. 30, 1903.)

WATER COURSES—SUBTERRANEAN CHANNELS—PERCOLATING WATERS—ADJOINING OWNERS—WASTE—INJUNCTION.

1. A well-defined subterranean stream cannot be diverted to the detriment of an adjoining landowner.

2. The presumption is that subterranean waters furnishing water supplying wells are percolating waters, unless the supply is shown to be from a stream of known and defined channel, and the burden of proving the existence of such channel is on those asserting it.

3. A landowner who digged a well obtaining a supply from percolating waters, thereby cutting off the supply of an adjoining owner, must be enjoined from wasting the full flow obtained by him for the mere purpose of injuring his neighbor, the supply being more than adequate for both.

Appeal from District Court, Boone County; J. R. Whitaker, Judge.

Plaintiff is owner of S. ½ S. W. ¼ of section 10, and N. ½ N. W. ¼ of section 15, township 82 N., of range 25 W. of the fifth P. M. The defendant owns the N. ½ S. W. ¼ of section 10. A run, known as "Big Creek," nearly north and south, passes through both farms to the south. Following the trend of this creek for three or four miles in a northwesterly and southeasterly direction, and about one-half mile wide, flowing wells are obtained at a uniform depth, considering the elevation of the surface. The

Digitized by Google

ıear his house, somewhat above the level of :he creek. Later two other wells were sunk, ›ne in the valley of the creek in the north 30, and the other about 30 rods from his ›arn, to which an underground pipe was ex- :ended to a tank at the barn. In July, 1901, :he defendant Abraham put down a three- ınch well on his farm near the south line, :lose to the creek, to which he dug a ditch, ınd allowed the water to flow unrestrained :hrough the creek to the land below. This re- sulted in stopping the flow of water from plaintiff's wells at his house and near the ›arn. In pursuance of a temporary writ of injunction, the flow of defendant's well was :educed to one-fourth of an inch, whereupon water again flowed from plaintiff's well. Up- ›n final hearing the injunction was made permanent, and defendant appeals. Affirmed.

W. W. Goodykoontz and Crooks & Snell, for appellant. Charles Whitaker, for appel- lee.

LADD, J. The particular district within which flowing wells may be obtained at a depth varying from 100 to 200 feet is three or four miles in length by about one-half mile in width, following the direction of the creek. Within this area there are at least 11 wells which are now or have been flowing above the earth's surface. That of plaintiff, near his barn, is 152 feet deep. The well sunk by defendant is only 107 feet deep, but on ground about as much lower as the differ- ence. Its casings are three inches in diame- ter, and the flow, when interrupted, has the effect of stopping plaintiff's well and of sev- eral others. It is located near the south line of defendant's land, from which the water runs in the creek, and, save that necessary for about 30 head of cattle, is without bene- fit to him or any one else. The water in ex- cess of a stream one-fourth inch in diameter, to which extent the district court directed him to restrain the flow, is absolutely wasted, and so done without excuse. True, he pre- tended that the entire flow was essential to prevent clogging with sand or gravel, but the evidence shows conclusively that this was less likely with the smallest available exit. Again, he pretended to have in contem- plation the elevation to his tenant's house, across the 80 acres, up some 40 feet, of water for domestic use by the operation of a hy- draulic ram. But the extent of his prepara- tion therefor was the reading of a circular from some manufacturing company. There was no proper showing that the flow permit- ted would be inadequate for this purpose, and it conclusively appears that it had noth- ing to do with his insistency upon utterly wasting the water his neighbors so much needed. Indeed, the record indicates strong- ly his object was to maliciously cut off the

er the water was supplied by percolation through the soil or a well-defined subterra- nean stream. If the latter, of course the water might not thus be diverted. Hougan v. Ry. Co., 35 Iowa, 558, 14 Am. Rep. 502; Burroughs v. Saterlee, 67 Iowa, 396, 25 N. W. 808, 56 Am. Rep. 350; Willis v. Perry, 92 Iowa, 297, 60 N. W. 727, 26 L. R. A. 124. But the presumption obtains that such wa- ters are percolating waters, unless shown to be supplied by a stream of known and de- fined channel. Gould on Waters, §§ 280, 281; Hanson v. McCue, 42 Cal. 303, 10 Am. Rep. 299; Tampa Waterworks Co. v. Cline, 37 Fla. 586, 20 South. 780, 33 L. R. A. 376, 53 Am. St. Rep. 262; Metcalf v. Nelson, 8 S. D. 87, 65 N. W. 911, 59 Am. St. Rep. 746; Wheatley v. Baugh, 25 Pa. 528, 64 Am. Dec. 721; Huber v. Merkel (Wis.) 94 N. W. 354. And it follows that the burden of proof is upon those asserting right to waters below the surface, on the ground that they flow in a defined and known channel, to establish the existence of such channel. Black v. Ballymena Com'rs, 17 L. R. Ir. 459; Huber v. Merkel, supra. It is to be observed that the mere existence of the channel is not enough; its location must be known or reasonably ascertainable. Lybe's Appeal, 106 Pa. 626, 51 Am. Rep. 542; Collins v. Chartiers Val- ley Gas Co., 131 Pa. 143, 18 Atl. 1012, 6 L. R. A. 280, 17 Am. St. Rep. 791, where the court concludes that it is clear, "from the principles and the reasoning of all the cases, that the distinction between rights in surface and in subterranean waters is not founded on the fact of their location above or below the ground, but on the fact of knowledge, actual or reasonably acquirable, of their existence, location, and course." And in Black v. Bal- lymena Com'rs, supra: "So far the law on the subject is clear; but a difficulty appears still to exist as to the application of this rule by reason of the use of the word 'known' in connection with the word 'defined,' and it does not seem to have been laid down as yet what the nature or extent of the knowl- edge is which must be proved to exist in or- der to constitute the riparian relation. It cannot mean that a channel should be visible throughout its course, which would be an im- possibility, from the very fact of its being subterranean. In considering the question, the knowledge required cannot be reasonably held to be that derived from a discovery in part by excavation exposing the channel, but must be knowledge by reasonable inference from existing and observed facts in the nat- ural, or, rather, the pre-existing, condition of the surface of the ground. The onus of proof, of course, lies on the plaintiff claiming the right, and it lies upon him to show that without opening the ground by excavation, or having recourse to abstruse speculations of scientific persons, men of ordinary powers

Digitized by Google

ranean channel." Surface indications of a stream are discussed in Tampa Waterworks Co. v. Cline, supra, where surface depressions extended on either side of a spring; in Hale v. McLea, 53 Cal. 578, where a line of bushes usually found nowhere except over water courses extended from a spring on adjoining land. See, also, Saddler v. Lee, 66 Ga. 45, 42 Am. Rep. 62; Wheatley v. Baugh, supra. Valuable note to Wheelock v. Jacobs, 67 Am. St. Rep. 665. In the instant case surface indications do not aid in locating a stream below. The mere fact that the excessive flow from one well interrupted that of several others did not tend to point out the location, course, or even existence of a subterranean river or smaller water course. Taylor v. Welch, 6 Or. 199. A similar result would be as likely to occur when the supply is derived from water filtrating through the soil until caught in a stratum of sand and gravel lying between impervious layers of other material. See Huber v. Merkel, supra. Indeed, the fact that large quantities of sand and gravel are drawn up when the level at which water is found is reached strongly sustains the latter view. But we need go no farther than to say there is nothing in the record to overcome the presumption that the supply of the entire district is percolating water. If a stream one-half mile wide, it could scarcely be affected by the small outlets afforded by these wells. If a number of narrower streams flow beneath the surface, the location of none has been pointed out nor appears to be ascertainable. Chase v. Silverstone, 62 Me. 175, 16 Am. Rep. 419; Taylor v. Welch, supra; Greencastle v. Hazelett, 23 Ind. 189; Haldeman v. Bruckhart, 45 Pa. 514, 84 Am. Dec. 511; Gould v. Eaton, 111 Cal. 639, 44 Pac. 319, 52 Am. St. Rep. 201.

This being true, there is no doubt but defendant had the right to make such beneficial use of the water in the improvement of his land as he might choose. But it does not follow that he had the right to draw from this reservoir within the earth wherein nature had stored water in large quantities for beneficial purposes merely to waste or carry out a design to injure those having equal access to the same supply. Decisions to the effect that percolating waters are to be treated the same in law as the land in which found, and may be diverted, consumed, or cut off with impunity, without liability for interfering or destroying the supply, are numerous in this country and England—too numerous for citation; but see Wheatley v. Baugh, supra, Mayer & Aldeman, etc., v. Pickles, A. C. (1895) 587, and Frazier v. Brown, 12 Ohio St. 294. In the last of these cases the principle underlying the right to such waters, and the reasons upon which it rests, were thus stated: "In the absence of percolating, oozing, or filtrating through the earth; and this mainly from considerations of public policy: (1) Because the existence, origin, movement, and course of such waters and the causes which govern and direct their movements, are so secret, occult, and concealed that an attempt to administer any set of legal rules in respect to them would be involved in hopeless uncertainty, and would be therefore practically impossible; (2) because any such recognition of correlative rights would interfere, to the material detriment of the commonwealth, with drainage, and agriculture, mining, the construction of highways and railroads, with sanitary regulations, building, and the general progress of improvement in works of embellishment and utility." An examination of the authorities, however, indicates that they proceed upon the theory that the right thereto relates to the beneficial use of the land, and is connected with its enjoyment for the purposes of agriculture, mining, trade, improvement and the like. This thought is emphasized by the dicta in many decisions to the effect that percolating waters may not be extracted from the earth to the injury of others merely to gratify malice. Thus, in the leading case of Wheatley v. Baugh, supra, the court declared that "neither the civil law nor the common law permits a man to be deprived of a well or spring or stream of water for the mere gratification of malice. The reason is that water, like air, is of such a nature that no one can have an exclusive right in it. In the process of evaporation and condensation it is sent in refreshing showers all over the earth. In its descent into the ocean it necessarily passes from the one to the other, and is intended for the benefit of all. The right of each is more or less dependent upon that of his neighbor." See, also, Greenleaf v. Francis, 18 Pick. 119, where it was held that an owner may dig a well in any part of his land, even though the water in his neighbor's well be diminished, but with this limitation, that in doing so he is not actuated by a malicious intent to deprive his neighbor of water without benefit to himself. The right being conceded, possibly the intent with which exercised would be immaterial. On this point the authorities are in conflict. See Chesley v. King, 74 Me. 164, 43 Am. Rep. 569; Huber v. Merkel (Wis.) 94 N. W. 354. The important intimation to which we wish to direct attention is that with respect to the beneficial use. Indeed, a decided tendency to depart from the strict rules of the common law with respect to percolating waters in the adjustment of modern conditions is manifest in recent decisions. In the well-considered case of Stillwater Water Co. v. Farmer (Minn.) 93 N. W. 907, 60 L. R. A. 877, the Supreme Court of Minnesota held that

Digitized by Google

company of the supply from which it furnished the people of a city. There the plaintiff supplied water for domestic purposes to the people of the city of Stillwater from a spring about which it had constructed a wall some six feet in diameter. This was within a few feet from the boundary line between the company's and Farmer's land. Near this line, and not more than ten feet from the center of the spring, Farmer excavated a trench, and placed in it a ten-inch tile drain connected with the city sewer. As a result percolating waters were drawn away from the spring, where they would naturally have gone, materially affecting the supply of water in the spring. Thereupon the company made a change in the outlet and in the mains to guard against such loss; whereupon Farmer began to lay his tile at a lower level, commencing at the sewer. A temporary injunction was granted, and in a well-considered opinion the court held that defendant might not even collect percolating waters merely to squander them to the detriment of his neighbor. The theory of the decision is that, while ownership of the soil extends to the center of the earth, it is somewhat restrained by the maxim, "Sic utere tuo ut alienum non lædas." The court directs attention to the fact that in nearly every case where the right to collect or divert percolating waters has been upheld this has been for some beneficial purpose, and pertinently suggests that there is no good reason for not applying the doctrine of correlative rights in such a case, and that such application will not interfere with proper improvement of land, but tend to promote the general welfare of all citizens alike. The rule approved is thus stated: "Except for the benefit and improvement of his own property or for his own beneficial use, the owner of land has no right to drain, collect, or divert percolating waters thereon, when such acts will destroy or materially injure the spring of another person, the waters of which spring are used by the general public for domestic purposes. He must not drain, collect, or divert such waters for the sole purpose of wasting them. Briefly stated, a landowner must not collect and wantonly waste percolating waters, which would otherwise be or have theretofore been appropriated by his neighbor for the general welfare of the people."

The doctrine of correlative rights between landowners respecting the appropriation and use of percolating waters has been broadly applied in New Hampshire (Bassett v. Salisbury Mfg. Co., 43 N. H. 569, 82 Am. Dec. 179; Swett v. Cutts, 50 N. H. 439, 9 Am. Rep. 276), where the court declared that no good reason could be given why it should not be applicable in all cases where the rights of owners of adjoining lands to collect and use percolating waters are in apparent, from which, by the use of pumps of potential force and reach, he may drain the percolating waters from the premises of his neighbors to their injury, merely for the purpose of merchandising the water to consumers distant from the land. Forbell v. City of New York, 164 N. Y. 522, 58 N. E. 644, 51 L. R. A. 695, 79 Am. St. Rep. 666. In that case it was said: "In the absence of contract or enactment, whatever it is reasonable for the owner to do with his subsurface water, regard being had to the definite rights of others, he may do. He may make the most of it that he reasonably can. It is not unreasonable, so far as it is now apparent to us, that he should dig wells, and take therefrom all the water that he needs, in order to the fullest enjoyment and usefulness of his land as land, either for purposes of pleasure, abode, productiveness of soil, trade, manufacture, or for whatever else the land as land may serve. He may consume it, but must not discharge it to the injury of others. But to fit it up with wells and pumps of such pervasive and potential reach that from their base the defendant can tap the water stored in the plaintiff's land, and in all the region thereabout, and lead it to his own land, and by merchandising it prevent its return, is, however reasonable it may appear to the defendant and its customers, unreasonable as to the plaintiff and the others whose lands are thus clandestinely sapped, and their value impaired." The opinion seems to be grounded upon the notion that extracting the water by force constituted a trespass, and the court, apparently in recognizing a departure from previous decisions, added: "We more readily conclude to affirm because the immunity from liability which defendant claims violates our sense of justice. It seems to pervert just rules to unjust purposes. It does wrong under the letter of the law, in defiance of its spirit." Smith v. City of Brooklyn (Sup.) 46 N. Y. Supp. 141, is referred to approvingly. In that case, upon full consideration, the court declared that, while waters might be extracted from the depths for the reasonable use or improvement of the land, the law will not allow this to be done for some purpose unconnected with the use, improvement, or enjoyment of the land itself to the detriment of adjoining owners. See same case on appeal, 160 N. Y. 357, 54 N. E. 787, 45 L. R. A. 664. It is not necessary to go to this extent in order to sustain the decree in this case. The water from defendant's well, in excess of that allowed him by the court, fell to the earth, and immediately flowed from his land on that of a neighbor below. He proposed to draw the percolating waters, not to supply the people of a great city, but to waste without advantage to any one. In principle the case is like that of Stillwater Water Co. v. Farmer, supra, and

Digitized by Google

flow at full capacity, not only to stop plaintiff's well, but every other well in the neighborhood, and this without the slightest benefit to himself. Indeed, this is precisely what he has threatened if interfered with. May one man thus waste the waters stored by nature for the community and wantonly deprive it of their use? Are the courts powerless to remedy such a wrong? The Supreme Court of Wisconsin seems to have so held. Huber v. Merkel, 94 N. W. 354. A distinction between an injury to the quality of the neighbor's land, as in Forbell v. City of New York, and to the enjoyment of its use, is suggested, but this is not substantial. See, also, Hague v. Wheeler (Pa.) 27 Atl. 714, 22 L. R. A. 141, 37 Am. St. Rep. 736. Certainly no good reason can be found for allowing the owner of land to draw subsurface water therefrom merely to waste, when this results in draining like water from his neighbor's land, to his detriment in its use and enjoyment. Water moves so readily from one place to another that any definite portion of it cannot be said to be the property of the owner of the soil until in some way reduced to control. The water flowing in defendant's well may have been from plaintiff's land or that of some other well owner a moment previous. In this respect it differs from minerals beneath the surface, and is more like natural gas, which may not be allowed to escape by a landowner, when not made use of, to the detriment of his neighbors. Ohio Oil Co. v. Indiana, 150 Ind. 698, 50 N. E. 1124; Id., 177 U. S. 190, 20 Sup. Ct. 576, 44 L. Ed. 729. Possibly he may waste that on his own land, if he can do so without draining water from his neighbor's. But the source of the supply of percolating waters can seldom be determined, and this is one of the main reasons for permitting its free appropriation by the owner of the soil. A different rule would undoubtedly restrict the use and improvement of land. But the prevention of carrying the water from the land of the owner for the purposes of commerce or waste cannot retard the improvement of the land itself, and there is no just ground for tolerating such diversion when the direct result is to deprive the adjoining landowners by the incidental drainage of their land of a supply of water from the same natural reservoir. This would be extracting the subterranean water from the adjoining land to its injury, without any counter benefit to the land through which taken, and presents a stronger case for the interference of a court of equity than Forbell v. City of New York. There the drainage rendered the adjoining land unfit for the growth of water cresses, which had formerly been raised upon it; here it destroyed the water supply essential for its customary use and enjoyment. There the drainage was to secure water to distribute land below. The soundness of some of the reasoning of the Forbell Case may well be doubted. The exertion of the force there was in the removal of the subterranean waters in the city's land, and the only suction occasioned was by emptying a cavity into which the water naturally drained from the surrounding country. It is at least exceedingly doubtful whether this constituted trespass. In a lesser degree this happens whenever the sinking of one well has the effect of drying up another. The doctrine of Smith v. City of Brooklyn, that the free use of such waters is limited to the improvement, use, and enjoyment of the land from which taken, and cannot be carried away for the purposes of commerce or waste, to the injury of the premises of an adjoining owner, has the better reason for its support. But we need not go this far, even to sustain the decree of the district court, as in the case at bar the owner derived no benefit from the sale or use of the water. As said, the case is in principle like Stillwater Water Co. v. Farmer, supra. The doctrine there announced is in harmony with good morals. It interferes with no valuable right of the defendants. It shields from destruction property rights of great value belonging to the plaintiff and others. It goes no farther than to say that a landowner may not collect, drain, or divert waters percolating through the earth merely to carry from his own land for no useful purpose, when such action on his part will have the effect of materially injuring or destroying the well or spring of another, the waters of which are devoted to some beneficial use connected with the land where found. It applies in principle the doctrine of correlative rights to the control of subsurface waters whenever the appropriation proposed is unconnected with the use, enjoyment, or improvement of the land from which taken.

Affirmed.

DEEMER, J., concurs in result.

DAVENPORT GAS & ELECTRIC CO. v. REIMERS.

(Supreme Court of Iowa. Oct. 30, 1903.)

LEASE OF BUSINESS—CONTINUED USE OF NAME—LIABILITY OF LESSOR FOR DEBTS.

1. Defendant, J. N. R., who had been conducting a business under the name of J. N. R. Printing Company, leased the business, after which an indebtedness for light and power was incurred by the lessee, without notice to the creditor of defendant's retirement, as the business name had been retained. *Held*, that defendant was liable.

Appeal from District Court, Scott County; J. W. Bollinger, Judge.

Action at law to recover for electric light and power alleged to have been furnished at defendant's instance and request. Judgment

Digitized by Google

Henry Thuenen, Jr., for appellant. E. M. Sharon, for appellee.

PER CURIAM. Plaintiff claims to have furnished light and power to the J. N. Reimers Printing Company, a partnership composed of the defendant, J. N. Reimers, and Moody W. Martin. The defendant denies that at the time the service was furnished he had any partnership interest in the alleged firm, and alleges that the name J. N. Reimers Printing Company was simply the style under which Martin alone was doing business. It is conceded by the appellant, Reimers, that he formerly owned and conducted a business under the name of J. N. Reimers Printing Company. He claims, however, to have leased the plant to Martin, who, to his knowledge, and presumably with his consent, continued the business under the old name, and he says that the bill on which this suit is brought accrued after Martin became the sole proprietor. But appellant, having permitted Martin to make use of his name, and continue thereunder a business which he had established, is not in position to complain if third persons, dealing with the concern without notice of his retirement, extend credit on faith of his personal responsibility. He does not pretend to have notified appellee of his withdrawal, or that Martin alone was the party receiving the service. It may be true, as contended, that no partnership, in fact, ever existed, but a business name was used which embodied defendant's individual name in a style ordinarily suggesting a partnership, and, if by such means appellee was induced to extend credit, it is but simple justice that appellant be required to pay the bill.

The judgment of the district court is affirmed.

TOPPING et al. v. DOUGLAS et al.

(Supreme Court of Iowa. Oct. 31, 1908.)

SCHOOL DISTRICTS — REMOVAL OF SCHOOLHOUSE—APPEAL TO STATE SUPERINTENDENT — INJUNCTION — APPEAL — DISMISSAL — TAXATION OF COSTS—REVIEW.

1. Where, pending an appeal to the State Superintendent of Public Instruction from an order of the board of directors of a school district for the removal of the schoolhouse, appellants obtain a temporary injunction restraining the removal until the appeal is determined, and then appeal from a dissolution thereof, pending which the first appeal is determined, all parties acquiescing in the decision, the second appeal will be dismissed.

2. The taxation of costs cannot be reviewed where no motion was made in the court below to retax them.

Appeal from District Court, Van Buren County; Frank Eichelberger, Judge.

This is an appeal by plaintiffs from an

J. P. Starr and J. C. Calhoun, for appellants. Wherry & Walker, for appellees.

PER CURIAM. An amended abstract has been filed by appellees, and appellants move to strike the same for that a certain designated portion thereof is unnecessary, all the matters therein set forth appearing sufficiently in appellants' abstract; that the remaining portion thereof is immaterial and redundant. The motion is well taken as to the portion first alluded to, and also as to a part of the remaining portion. Five dollars of the costs of printing said amendment is ordered taxed to appellees.

The defendants are members of the board of directors of School District Township of Union in Van Buren county. The board having made an order directing the removal of the schoolhouse in a subdistrict of said township from one location to another, these plaintiffs, who are residents and taxpayers of such subdistrict, took an appeal to the county superintendent, where the matter was heard, and a decision rendered adverse to the appellants. They then appealed to the Superintendent of Public Instruction of the state. This action is brought to restrain defendants from proceeding with the work of removal until such appeal shall be finally determined. A writ of temporary injunction was applied for, and one was ordered and issued. Thereafter defendants, having answered, filed a motion to dissolve the temporary injunction, and such motion was sustained, and the costs taxed to plaintiffs. It is from this ruling that plaintiffs appeal. It is now made to appear by the additional abstract filed by appellees that since the ruling complained of was made, the appeal to the State Superintendent has been determined, and a decision filed, and that all parties have acquiesced in such decision. It is manifest therefore, that there is no longer any real subject of litigation between the parties. We have often held that we will not decide abstract questions, there being no rights of the parties to be protected or enforced requiring a decision at our hands. We need not cite the cases. Appellants complain of the taxation of the costs to them upon the motion to dissolve the injunction being sustained. This complaint we cannot consider, for the reason that no motion was made in the court below to retax such costs. Errors in taxation of costs cannot be reviewed in this court unless a motion for retaxation was made in the court below and overruled. Snell v. Dubuque, etc., 88 Iowa, 442, 55 N. W. 310; Allen v. Seaward, 86 Iowa, 718, 52 N. W. 557.

For the reasons pointed out, the appeal is dismissed.

¶ 2. See Costs, vol. 12, Cent. Dig. § 804.

Digitized by Google

(Supreme Court of Iowa. Oct. 30, 1903.)

ESTATE OF DECEDENTS—DISTRIBUTION—QUESTIONING SETTLEMENT—FRAUD—EVIDENCE—SUFFICIENCY.

1. A final settlement and disposition of an estate after parties interested were sufficiently apprised of their rights to have guarded their interest if so disposed will not be disturbed on the ground of fraud in procuring the settlement, where the charges are not clearly established, and the proceedings are not timely brought.

Appeal from District Court, Woodbury County; Geo. W. Wakefield, Judge.

Action to quiet title to certain described lands. It appears that the property in question was owned by Williard A. Smith in his lifetime; that he died testate in April, 1894, leaving as his heirs his widow, Rebecca Smith, three sons, the plaintiffs F. H. and H. E. Smith and H. P. Smith, and four daughters, the defendant Nora B., now Mrs. Buchanan, Gertrude, now Mrs. Means, Jennie, now Mrs. Tresham, and Myra E. Smith. It further appears that the will of said Williard A. Smith was duly probated, and that by the tenor thereof he left to his widow their dwelling house in Smithland, Woodbury county. It is then provided that a sufficient amount of his property should be set aside for the support of his widow, and that the indebtedness standing against the homestead should be paid out of the balance of his property; that all remaining should be distributed, the real estate among his seven children share and share alike, and the personal property among his three sons. The widow elected to take under the will. The three sons were nominated by the will as executors, and they were appointed and qualified. In October, 1894, said executors, through J. A. Pritchard, their attorney, filed a petition in probate setting forth that previous to his death their testator had made an oral contract of sale of the lands herein in controversy to J. W. Means, husband of his daughter Gertrude, and that said Means had taken possession thereof, and had paid part of the purchase price; that they, said executors, are unable to determine whether the interest of the estate in said land is personal or real property, and asking the court to make such determination. Upon this petition being presented to the court, a time was fixed for hearing, and of this each of the heirs had due notice. No one appeared at the hearing except the executors and J. W. Means, and the testimony of the latter was taken as to the sale to him by the decedent. No order was made at the time, and, although there is some confusion in the evidence bearing upon the point, we think it fairly appears that a suggestion was made by the court to the effect that a more satisfactory way to dispose of the matter would be by way of an order based upon a stipulation signed by all the parties in interest. On December 12, estate of Williard A. Smith in the following real estate (describing the lands here in controversy) shall be treated as personal property by the executors of said estate, but that out of the proceeds of the same all indebtedness against the homestead bequeathed to the widow shall be paid; further, that the amount set aside for the yearly support of the widow shall be paid by said heirs pro rata according to the amount inherited by each, and to secure the payment thereof there shall be created a lien upon all the real estate of said decedent. Upon filing such stipulation, the court made and entered an order directing that the interest of the estate in said real estate be deemed personal property, and distributed as such, after first paying therefrom the indebtedness existing against the homestead estate. The executors thereupon proceeded to settle the estate accordingly, and in March, 1896, filed a final report, in which it appears, among other things, that all real estate had been amicably divided; that the personal property, including the amount realized from the sale of the land in question to Means, had been divided among the three brothers; that the latter, out of their own means, had paid off the incumbrance on the homestead devised to the widow, amounting to $1,754.92, and all other debts and expenses existing against the estate. Notice of this report, and of the final hearing thereon, was given to each heir, and each indorsed thereon an acceptance of service, as follows: "We accept service of the within notice. We have examined said final report, and are satisfied that the same is correct and just, and we consent that said report may be heard at any time, and approved by the court." March 31, 1896, the report was approved by the court, and the executors discharged. Thereafter the said Means sold the real estate in controversy to the three Smith brothers, and later H. P. Smith sold his interest therein to the plaintiff Gambs. In February, 1901, the widow, Rebecca Smith, Gertrude Means and W. H., her husband, Jennie Tresham and James, her husband, and Myra Smith quitclaimed to the plaintiffs F. H. and H. E. Smith and L. N. Gambs. The defendant Nora Buchanan and H. A., her husband, upon demand therefor, refused to join in such quitclaim. Thereupon this action was brought to quiet the title in and to said real estate in the plaintiffs. The defendants answered, alleging that in point of fact no sale had ever been made of the property in controversy to Means; that such claim was part of a conspiracy entered into between the three brothers and their attorney, J. A. Pritchard, to secure to themselves the value of said property by having the interest of the estate therein declared personal property; that the filing of the petition in the probate court

Digitized by Google

was adopted as the plan of working out such conspiracy; that the stipulation was procured by fraud and deceit, it being represented that the court had made an order declaring the interest of the estate in the property to be personal, and that the stipulation was wanted simply to conform to the court's order and to make the title perfect. A petition of intervention was filed on behalf of all the other heirs, not including the widow, in which the substance of allegations of the answer of the defendants are adopted. As to the quitclaim deed, it is said that the same was procured by deception and by intimidation, threats of litigation, etc. It is also said that fraud and deception alleged was not discovered until within five years. The plaintiffs reply, alleging the sale to Means, setting forth the probate proceedings and the quitclaim deed, denying all fraud, and pleading the statute of limitations. The case having been tried to the court, there was a decree in favor of plaintiffs. The defendants and interveners appeal. Affirmed.

Charles A. Dickson, for appellants. J. A. Prichard and M. J. Sweeley, for appellees.

PER CURIAM. Without difficulty we reach the conclusion that the decree was right and should be affirmed. We do not feel called upon to set forth the evidence at length, or to enter upon any discussion of the same. It is sufficient to say that the charges of fraud and deception are not established by the evidence. Moreover, we think that the defendants and interveners were sufficiently apprised of their rights to have guarded their own interests had they been so disposed, and, clearly, we should refuse to allow the final settlement and disposition of the estate to be disturbed except upon the most clear and positive evidence, and this had the proceedings therefor been timely brought. We do not think the complaint now made is timely. We may also say that we can see no gross unfairness in the settlement as had. The sons took the value of the land, which was about $3,300. Out of this they paid the indebtedness on the homestead and all other debts and expenses. It does not appear what such amounted to, but it may be fairly inferred that the sisters realized as a net balance nearly, if not quite, as much as they would had the real estate been divded among the seven, and each paid a proportionate amount of the incumbrance, debts, and expenses.

Affirmed.

ALBRECHT v. ALBRECHT et al.

(Supreme Court of Iowa. Oct. 24, 1903.)

DEEDS—DELIVERY—CONTROL BY GRANTOR—DESTRUCTION — CONSENT OF GRANTEE — AGREEMENT TO CONVEY—WAIVER—ACCEPTANCE.

1. A deed conveying land in trust was left with a third person, to be delivered after the grantor's death. Grantor, after the deed, so expressed himself as that he had lost all control over t that he understood he had parted w and reserved the enjoyment of the life. The custodian stated that t reservation of any kind when the livered. *Held* sufficient to show tha livered the deed without reserving control, intending to pass a presen

2. Where a grantee in a deed de third person to be delivered to h grantor's death voluntarily consent struction by the grantor, and the of a trust deed for her benefit, she that the deed absolute passed t though destroyed after its delivery todian.

3. Where a trust deed, with the the beneficiary, is substituted for deed absolute, the acceptance of th is a satisfaction of the agreement to solutely and a waiver thereof.

4. Where a trust deed delivered person to be delivered to the trustee tor's death was assented to and cepted by a beneficiary when it w and was accepted by the grantees tor's death, the acceptance was shown.

Appeal from District Court, P C. P. Holmes, Judge.

Suit in equity for the cancell trust deed and for the partition tate. Defendant Minnie Frederi beneficiary under the trust deed, fi petition, in which she claimed ab to the land, and asked that it be her. The trial court dismissed b tition and the cross-petition, an and defendant Frederickson ap firmed.

Clark & McLaughlin and Carr, H ker & Wright, for appellant Louis Mulvaney Bros. and Read & Res pellant Minnie Frederickson. Da vison, for appellees.

DEEMER, J. February 10, 189 brecht, father of the parties to tion, who was then about 75 yea and in poor health, executed two for 20 acres of land to Richard Alb the other 120 acres to the cross Minnie Frederickson. At the sam made an assignment of certain mortgages to Richard and Ernest This assignment read as follows: " decease the above notes are to be t to Richard and Ernest Albrecht, they will then belong." These pa all turned over to one Havens, a the peace, with the statement tha vens) should keep them until the assignor was dead, and then del over to the grantees and assignee days after the execution of these pa Albrecht became dissatisfied with he had made to Minnie Frederickso reason that thereunder Minnie's might some time inherit a part of erty, and Minnie's children might the full benefit thereof. He ther

Digitized by Google

erty to appellees Richard and Ernest, in trust for the use and benefit of Minnie and her children. This was accordingly done, and the original deed to Minnie was returned to the grantor, who thereupon destroyed it, and delivered the trust deed to Havens, to be held by him until the death of John, and then delivered to the trustees. The father died in the year 1897, and after his death the instruments to which we have referred were delivered to the grantees and assignees named therein. Prior to his death John Albrecht had retained the notes and mortgages, collected the interest due thereon, received the principal of some of them, and reloaned it to others, and in all ways managed the same as if they were his own. He also continued to use and occupy the real estate covered by his deeds, paid taxes thereon, and managed the same as he had done before the execution of the deeds.

The validity of the assignment of the notes and mortgages is not involved in this suit. The action is to set aside the trust deed, and to have plaintiff decreed to be the equitable owner of one-fourth of the property covered thereby.

The cross-petitioner seeks to have the absolute deed of February 10, 1893, to Minnie Frederickson, established, and her title thereunder confirmed; and she also asks, in the event this relief is not granted her, to have a decree for the specific performance of an alleged contract, whereby deceased agreed to give her the real estate and other property, in consideration of her agreement to remain at home and care for her parents during their old age. Averring performance on her part of this agreement, she asks that the title to the real estate be confirmed in her.

Plaintiff's case is bottomed on two propositions: First, that neither the absolute nor the trust deed to Minnie Frederickson was ever delivered; and, second, that, if delivered, they were each testamentary in character, and were not intended to pass a present estate; that, being testamentary in character, they were not executed with proper formalities to pass the estate by will; and that he is entitled to have them both canceled, and to have a decree establishing his interest in the property as one of the heirs of John Albrecht.

We shall first consider these propositions before going to the claims made by the cross-petitioner. The legal phases of the controversy have been so recently considered that we need do no more than refer to the latest case for a full exposition thereof. It is White v. Watts (Iowa) 92 N. W. 660. Indeed, this case is much like that one in many of its aspects, and but little need be added to what is there declared. The question, after all, is largely one of fact. It is this: What was the intent of the grantor when he tate? Havens' intent or understanding of the matter is not decisive of this issue, and the real question is, what was John Albrecht's intent? The parties do not materially disagree as to the law of the case, and there is little room for a discussion of the matter. They do not place the same construction on the language used in some of our decisions, but they do not seriously differ as to the point actually decided.

This matter has been explained in the White Case in the following language: "To be effective, such deposit [with a stranger] must be made without any reserved right or power in the grantor to control the deed or to prevent its delivery on his death. * * * This may be conceded to be the law, though the fact that it may be within the manual or physical power of the grantor to regain the possession of the deed, or that it may be within his mental power to alter his intention, will not necessarily defeat the conveyance." The whole matter, as we view it, is one of intent on the part of the grantor. The manner of reserving control over the deed is material in arriving at this intent; for where a deed is delivered with an express reservation of the right of recall under certain conditions there is an evident purpose on the part of the grantor not to make it presently effective as a conveyance. But the mere physical power of recall, or the presence of mental power to alter his intention, sheds no light on the question of intent when the deed is delivered. Neither does the understanding of the depositary nor the construction he places upon the language used when the instrument is delivered to him afford any evidence on the question of intent. The deed must be delivered, it is true, without any reservation of control; for such reservation clearly negatives an intent on the part of the grantor to pass a present estate, and if subject to reservation no estate passes. But mere physical or mental power of change is not regarded as of any probative force in solving the question of delivery. Plaintiff relies largely on the fact that John Albrecht did control one of the instruments after delivery, on the fact that he treated the property as his own after the conveyances and assignments were made, and on the language of the assignment which we have quoted as evidencing his intention not to deliver absolutely.

But for the fact that the absolute deed was converted into one of trust, and the absolute deed destroyed with the assent of Minnie Frederickson, who was called in when the trust deed was executed, there would be much force in the first proposition. But as her consent was obtained, and for some reason thought to be necessary, the probative value of the circumstance relied upon is materially lessened, if not entirely destroyed.

Digitized by Google

tion of a life estate is implied in the grantor, and under this reservation he has the right to the possession, control, and management of the property; hence there is nothing in this circumstance. The terms of the written assignment of the note and mortgage tend to support plaintiff's position, but this should not be allowed to defeat the deeds. The assignor and grantor may have intended to dispose of his real estate absolutely, and to defer the disposition of his notes until his death. This he could do in the manner shown in this case, and, while there is some value in this evidence as tending to confirm plaintiff's contention, it is by no means controlling. There is no doubt, under the evidence, that he intended the other deed to his son, Richard, which was executed at the same time as the original deed to Mrs. Frederickson, to pass a present estate, for he had received the consideration for the land conveyed to Richard, and was under a present duty to convey him the land. This being true, each conveyance or transfer must to a certain extent at least stand on its own bottom. Moreover, the trust deed was not executed at the time of the assignments of the choses in action, but some five days afterward, and there is not a syllable of evidence tending to show any reservation of control as to this deed.

The value of the assignment of the notes as evidence is neutralized by the execution of the other deed at the same time, and by the further fact that the trust deed was delivered without any reservation whatever. The custodian of these deeds testified that the instruments were delivered to him, to be delivered to the grantees upon the death of the grantor, and that there was no reservation of any kind at the time of the delivery, or afterwards, by the grantor. Moreover, it is shown that after the grantor had executed the trust deed he so expressed himself as to indicate that he had lost all control over the deed. His declarations after the delivery of the trust deed all indicate that he understood he had parted with the title to the land, although enjoyment thereof during life he had reserved to himself.

This right of enjoyment, as we have seen, has no bearing upon the question of the defendants' title. The cross-petitioner contends that the first, the absolute, deed should be confirmed and established, although destroyed by the grantor after the delivery to Havens. Her contention would no doubt be sound, were it not for the fact that she consented to the destruction of the deed and to the substitution therefor of the trust deed, under which defendants now claim. There is no doubt of the right in law of a grantor and grantee in a deed which has not been recorded to mutually consent to its destruction, and to the substitution of an-

the instrument of convey
principle we have anno
both by reason and au
Farrar, 4 N. H. 191, 17 A
v. Spangler, 35 Ohio S
Kane, 4 Wis. 1, 65 Am.

2. The cross-petitioner'
performance of the alleg
by John Albrecht to c
her absolutely must fail
evidence to sustain it.
fered to support it was l
coming from Minnie F
and from her husband,
competent to testify. N
had been sufficient evide
an agreement, her cons
trust conveyance would
faction of that agreeme
waiver of its provisions.
reasons for defeating this
not be elaborated, for wh
said disposes of the conte

We do not overlook the
sent on the part of Minnie
substitution of the trust
argument. The record sa
that such assent was in
in itself, disposes of all th
by the cross-petitioner.

On the question of acce
deed by the grantees, we
only that Mrs. Frederickso
ficiaries, knew of, assente
accepted the deed at the ti
but also testimony that it
benefit of the children of
is in fact beneficial in c
further fact that the tru
conveyance from Havens
of the grantor, Under th
White Case, supra, this w
ceptance.

The trial court was r
the trust deed, and its dec

PRATT v. FISHWILD
et al.

(Supreme Court of Iowa.

EXECUTORS AND ADMINIS
AGAINST ESTATE—PRESE
PAL AND SURETY—DETER
BILITY — CROSS-PETITION
FRAUDS.

1. Under Code, § 3601, pro
ment shall be affected becau
affecting the substantial rig
party, where an action on n
in the name of the payee
makers and the executor, w
tator was a surety merely,
the makers averred he wa
judgment determining the re
ers and such executor will r
the ground that, in the abse
tion, the court was without

Digitized by Google

on a note executed by the firm and his testate, that testate, for sufficient consideration, had agreed to pay half the indebtedness of the firm is sustained by evidence that he secured the admission of his son into the firm, and was largely involved as surety for him and the firm; that a half interest in the business was sold, and the proceeds taken by testate; and that to effect a sale and secure the introduction of the purchaser into the firm as a partner, and on the faith of his agreement to pay the indebtedness, he procured the consent of the other partner to accept the purchaser as a partner.

3. Where, by an agreement to pay the debts of a firm, the promisor, for a sufficient consideration, makes such debts his own, and becomes primarily liable, the agreement is not within the statute of frauds.

4. Where a claim has been filed against an estate, and parties jointly liable are insisting that the estate shall pay the whole debt, and that their liability to the estate shall not exceed half the amount so paid, such claim is not such a claim as is required to be presented within 12 months.

Appeal from District Court, Jones County; H. M. Remley, Judge.

Action upon two promissory notes—one executed May 10, 1896, by Fishwild & Williams, alleged to be composed of R. Fishwild and Roy Williams, and by R. S. Williams, surety, to L. H. Pratt, for the sum of $1,500, due in one year, with interest at 7 per cent.; and one executed May 10, 1898, by Fishwild & Williams and R. S. Williams to L. H. Pratt, for the sum of $1,500, due in one year, with interest at 8 per cent. It is conceded that the second note mentioned was given as a renewal of the first note. Such first note was not wholly paid thereby, however, there being interest due and unpaid. Before the commencement of this action, R. S. Williams died testate, and the appellant C. F. Kimball was duly appointed executor. The said notes were filed with said executor as a claim against the estate of said R. S. Williams. Thereafter said executor, assuming that the liability of his testator on said note was that of a surety only, served notice upon this plaintiff, as provided for in section 3064 of the Code, requiring her to bring suit on said notes as against the principal makers, or allow him (said executor) to do so. Plaintiff thereupon gave said executor authority to bring suit in her name, and this action was begun accordingly, the said C. F. Kimball, as an attorney, appearing on behalf of plaintiff. The defendant firm of Fishwild & Williams, and R. Fishwild, one of the members thereof, answered, alleging that said R. S. Williams did not occupy the relation of a surety on the said note last executed, but that at the time said note was executed and delivered he, the said R. S. Williams, was a silent or dormant partner in the firm of Fishwild & Williams and owning a one-half interest in said firm. For a further defense it is said that the said R. S. Williams, being responsible on a large amount of negotiable paper owed by said Roy Williams, his son, and the said Roy being largely overdrawn in his account the said R. S. Williams, with the consent of said firm, took and received the one-half interest in the business and property of the firm, and sold the same to one Shaffer for the sum of $6,000, which sum was paid to him, said R. S. Williams, in hand; that at the time thereof it was agreed by said R. S. Williams that in consideration that said Fishwild would accept said Shaffer as a partner, and waive his right to have the affairs of the partnership wound up, he, the said R. S. Williams, would, upon making such sale to Shaffer, pay one-half of all the debts then owing by said firm, including the notes here in suit, and release the said Fishwild from liability as to such one-half. It is the prayer of the answer that the judgment rendered on said notes be a joint judgment as against said firm and said R. S. Williams, and that said firm and the said Fishwild be held liable for one half only of such judgment, and the defendant R. S. Williams or his estate be held for the other half. On the day said answer was filed the plaintiff, appearing by W. L. Chamberlain, as her attorney, and the defendant firm jointly moved the court to compel C. F. Kimball, executor, to come in as a party defendant, as provided for by section 3065 of the Code, and on the same day said executor did appear as such, and filed answer admitting the execution of the notes, and that R. S. Williams signed the same as surety; averring want of knowledge as to whether the notes are unpaid; and praying judgment establishing his relation to said notes as that of a surety only. Thereafter there was filed in the name of plaintiff a reply denying that R. S. Williams was a partner in said firm; denying the alleged agreement on the part of said R. S. Williams to pay debts of said firm; alleging that such agreement, if made, was not evidenced by writing as by law required, and was without consideration, and void; that no claim of the character now made by defendants was filed against the estate of said R. S. Williams within one year, and the same is therefore barred. There was a trial to jury, resulting in a verdict finding for plaintiff as against all defendants, and finding the estate of R. S. Williams to be liable for one half the debt, and said firm and R. Fishwild and Roy Williams, members thereof, liable for the other half of the debt. Judgment was entered against all defendants except C. F. Kimball, executor, for the amount of the verdict, and the amount thereof was allowed as a claim against said estate, "and said estate is liable upon said claim as principal for one half of said amount and as surety for the other half; that the other defendants are liable on said judgment for one half the amount as principal, and as surety for

Digitized by Google

he other half of the same." From such udgment the defendant C. F. Kimball, exec-itor, appeals. Affirmed.

James E. Remley and C. F. Kimball, for ppellant. Miller & Chamberlain, W. W. Chamberlain, and Wilds & Bauder, for ap-pellees.

BISHOP, C. J. As we gather from the record, the trial was conducted on behalf of plaintiff and C. F. Kimball, executor, by C. F. Kimball as attorney. On behalf of plaintiff there was introduced in evidence the notes in suit, and the testimony of C. F. Kimball to the effect that Roy Williams had admitted to him that the defendant firm was composed of R. Fishwild and Roy Williams, and that R. S. Williams had signed the notes in suit as surety. Plaintiff then rested, whereupon a motion was made on her behalf and on behalf of the defendant Kimball, executor, for judgment on the pleadings against Fishwild & Williams and R. Fishwild and Roy Williams as principals and the defendant Kimball, executor, as surety. This motion was overruled. A motion was made after verdict in arrest of judgment and for judgment non obstante veredicto, based upon the same grounds stated above, among others, and this was overruled.

The contention of counsel for appellant, if we rightly interpret, is that, in the absence of a cross-petition as between the defendant firm and the defendant executor, the court had no jurisdiction to determine any question concerning the respective liabilities of the several defendants as between themselves. In this we are not disposed to agree in all strictness. It is true that no formal cross-petition was filed. But the action was commenced at the instigation of the executor, and Mrs. Pratt was but the plaintiff nominally. No one had disputed her rights, and it was not expected that any one would be found to dispute them. She had filed her claim with the executor, and, we may assume, was resting in the assurance that such claim would be paid in full out of the estate. The party having the prime interest in the institution of the suit was the executor by whom in fact it was prosecuted. Now, it is manifest that the executor believed that his testator was a surety only, and the suit was accordingly brought against the firm of Fishwild & Williams and the individual partners in said firm only. The answer of the defendants, however, disclosed the contention on their part that R. S. Williams was not a mere surety, but jointly liable on the notes in suit. The defendant firm thereupon joined with the plaintiff in demanding that the executor come in as a party and plead, which he did, making the specific allegation that the liability of his testator was that of a surety only, and praying judgment that his relation as such surety be established. It is to be noted, also, that in the reply filed in the name of the plaintiff the allegations tion to matters in which the was interested. The plaintiff least concerned therein. The within the jurisdiction of the his pleading made the direct character of his liability, and doubtedly inspired by the ple part of the defendant firm. and purposes, therefore, the a firm was a cross-bill, althoug titled, and the answer of the an answer thereto. The cause tried by the court upon that th cannot discover that the execut diced thereby. He went to tria jection as to the issues, save as joint motion for judgment upo ings, and he made no specific that ground until motion for ne verdict was made. Although h the plaintiff in making general the evidence offered by defendar the allegations of their answer, duced such evidence in oppositi he saw fit, and there is no sug he was prevented from produ evidence to be had bearing up ject. So, too, he treated the filed by him, and by proper obje the questions made thereby, an ruling of the court thereon. It ly desirable that all the issues parties should be tried in one as we think the executor was g portunity to and did present his we conclude that there should ference with the judgment by re informality complained of. It is of the Code (section 3601) that in every stage of an action, mu any error or defect in the procee does not affect the substantial ri adverse party; and no judgment versed or affected by reason of or defect." Our conclusion also port, in principle at least, in th authorities: Cotes & Patchin v. 9 Iowa, 238; Doniphan v. Stree 321; Bank v. Barber, 56 Iowa, 5 890; Hoyt v. Hoyt, 68 Iowa, 706 27; White v. Bryam, 96 Iowa, 16 765; Warren v. Chandler, 98 Io N. W. 242.

2. By its instructions the cou jury that there was no sufficient establish the relationship of R. S. as a partner in the firm of Fishw liams. The sole question subm whether or not R. S. Williams l to become liable for and to pay the indebtedness of said firm. C appellant contends that it was er mit such question, for that it had shown that such agreement, if based upon any sufficient consider think otherwise. It is made to a R. S. Williams was instrumental i

and at the time of the alleged agreement was largely involved as a surety for him and for the firm. The half interest in the property and business was sold by the father, the son joining in the conveyance; and the whole of the proceeds were taken possession of by the former, and disposed of by him as he saw fit. Moreover, there is evidence upon which the jury might find that, to effect a sale to the purchaser, and to secure his introduction into the business, and on the faith of his agreement to pay, he procured the consent of Fishwild to accept of such purchaser as a partner, and to forego the accounting, etc., incident to a dissolution of partnership. We cannot doubt but that out of this a sufficient consideration appears.

3. It is a further contention that such agreement, if made, was within the statute of frauds. As we have stated in the next preceding division of this opinion, there was evidence from which the jury might draw the conclusion that an agreement to pay was made by R. S. Williams, as alleged, and that such agreement was predicated upon the consideration alleged. Accepting this as the state of the record, we have no case coming within the statute of frauds. By taking the property and appropriating the proceeds thereof under the circumstances alleged, and under the agreement as alleged, R. S. Williams made the firm debts to the extent of one-half thereof his own debts. He then became primarily liable. "Whenever the main purpose of the person promising is not to answer for the debt of another, but to subserve some object of his own, the promise is not within the statute of frauds, although in form it may have the effect of extinguishing the liability of another." Johnson v. Knapp, 36 Iowa, 616. See, also, Chamberlin v. Ingalls, 38 Iowa, 300; Blair Town Lot & Land Co. v. Walker, 39 Iowa, 406; Emerson v. Slater, 22 How. 28, 16 L. Ed. 360; Davis v. Patrick, 114 U. S. 479, 12 Sup. Ct. 58, 35 L. Ed. 826.

4. There is no merit in the contention that the claim should not have been allowed against the estate, for that the same not having been filed and noticed for hearing within 12 months from notice of appointment of the executor. We have no data from which we can determine the precise facts, but, in our view, such would be immaterial. Certain it is that the claim was filed against the estate, and the liability to the plaintiff on such claim as a whole is not in dispute. The defendants are not in the attitude of making any claim against the estate. In effect, they are simply insisting that the estate shall pay the whole of plaintiff's debt, and that their liability to the estate shall not exceed one-half the amount so paid. Such is not a claim within the meaning of the statute requiring claims to be filed and proven.

mitted to the jury by the instructions, and no question is made as to the form of the verdict or judgment.

Affirmed.

RUSS v. AMERICAN CEREAL CO.

(Supreme Court of Iowa. Oct. 30, 1903.)

COURTS—SUCCESSIVE APPEALS—STARE DECISIS.

1. The decision of the Supreme Court on a first appeal becomes the law of the case and governs on a subsequent trial in the district court and on another appeal unless the facts on the second trial are materially different.

Appeal from District Court, Linn County; H. M. Remley, Judge.

Action to recover damages for the death of the plaintiff's intestate. There was a directed verdict for the defendant, and the plaintiff appeals. Affirmed.

Charles A. Clark & Son and Wm. G. Clark, for appellant. Dawley, Hubbard & Wheeler, for appellee.

PER CURIAM. This is the second appeal in this case and the controlling facts are set forth in the opinion upon the former appeal and will not be repeated. See 110 Iowa, 743, 81 N. W. 796. Upon the case as it was then presented, we held that the plaintiff was not entitled to recover, and that there should have been a directed verdict for the defendant, and for that reason reversed the judgment of the trial court. Upon a retrial in the district court the testimony given upon the former trial was read to the jury, and in addition thereto two witnesses were examined on the part of the plaintiff; one of them (Taylor) having testified on the other trial, and the other being a new witness. The appellee contends that the facts presented by the present appeal are precisely the same as those shown on the first trial, and that the decision then was a full and complete adjudication of the present case, and, such being true, that the verdict was properly directed for the defendant. It is the settled rule in this state that the decision of this court upon the first appeal becomes the law of the case, and is to govern upon a subsequent trial thereof in the district court, and upon another appeal, unless the facts before the court upon the second trial are materially different from those appearing upon the first. Adams County v. B. & M. R. R. Co., 55 Iowa, 94, 2 N. W. 1054, 7 N. W. 471; Babcock v. C. & N. W. Ry. Co., 72 Iowa, 197, 28 N. W. 644, 33 N. W. 628. The testimony of the witness Taylor given upon the last trial is in all material respects precisely the same as that given by him on the first trial. He was examined on both trials as to the size and condition of the trapdoor, its bearings, and the opening there-

Digitized by Google

nder through which the deceased fell. Upon the last trial he went a little more into etail as to the bearings upon which the door ested when in place, but his testimony gave o new facts as to the exact condition existing t the time of the accident. John M. Null was the new witness used upon the second rial. He was called as an expert, and testified, in answer to hypothetical questions, hat in his judgment a strip of board might ave been placed under the west edge of the trapdoor, so that it could not have tipped with a given weight upon it, and that it was entirely practicable as a mechanical proposition to furnish sufficient bearings for the door. The entire record in this case shows conclusively that the facts testified to by this witness were as patent to all men of ordinary intelligence as they were to him, and that his testimony added nothing to that already before the jury. An examination of the evidence before the court on both trials convinces us that it was in all material respects precisely the same. The substituted petition filed herein before the last trial omitted all reference to the unfastened condition of the trapdoor hinges, and alleged as the cause of the accident the lack of sufficient bearings for the door. But this can make no material difference in the final disposition of the case, because the same matter was urged and relied upon by the appellant upon the other submission, and was determined adversely to his contention.

The court properly directed a verdict for the defendant, and the judgment is affirmed.

MATHES v. BELL et al.

(Supreme Court of Iowa. Oct. 30, 1903.)

SPECIFIC PERFORMANCE—STATUTE OF FRAUDS — WRITING — LETTERS — CONSTRUCTION — PAYMENT—CERTAINTY OF CONTRACT.

1. A real estate agent wrote defendant that he had an offer for his farm at $65 per acre, to which defendant replied: "I will sell for that price if it is not already sold. Call me up by 'phone, and we will talk the matter over." Defendant subsequently told the agent to close the deal, and afterwards refused to convey, on ascertaining that the purchaser insisted on paying for only the number of acres shown by actual survey. *Held*, that defendant's letter was not a contract to sell and convey, and hence there was no agreement in writing, as required by Code, § 4625.

2. There could be no right to specific performance until it was ascertained to a certainty what was the number of acres and there was an offer to pay for the actual acreage at the price stated.

3. A deposit of $50 by the purchaser and the real estate agent to the defendant's credit did not take the case out of Code, § 4625, requiring agreements for the sale of land to be in writing, the deposit being made without knowledge or agreement on the part of the defendant.

Appeal from District Court, Linn County; W. G. Thompson, Judge.

Action in equity, brought to enforce the specific performance of a contrac real estate. The facts appearing June, 1901, the defendant P. D. resides at Van Horne, Benton c the owner of a tract of land in L of irregular shape, and which h contained 82½ acres. That he h sessed and paid taxes on that acres is admitted. On June 24, 1 ceived a letter from J. D. Crew, tate agent at Marion, Linn cour lows: "I have a man who has sixty-five dollars per acre for you cash, provided abstract shows title on delivery of the deed. He to have deal closed at once. Let by return mail what we can dep To this defendant replied on the day, saying: "Will say that I w that price if it is not already sold party has made me the same offer I wrote him last Friday I would offer, but have not heard from Call me up by 'phone when you re and we will talk the matter ov testifies that a few days later Be Marion, and told him to go ahead the deal; that he could get the a a designated abstract office; and he on the next day he got the abstract ed a deal with this plaintiff at $65 and that he (Crew) and plaintif a bank and deposited $50 to the Bell. In his testimony Bell does but that he told Crew he would says it was the distinct understan the land was to be taken at 8 Thereupon Crew wrote to Bell sa he had received the abstract, "Mathes accepted your proposition, you accepted his, which was sixty-fi per acre, and has deposited fifty your credit as a payment on the per contract, and has balance re receipt of deed. You said there w two and one-half acres, but the s ures but 67½ acres, so that the w to be paid is $——, fifty of which paid, as stated. Please execute dee so we can close up deal accordin tract." To this Bell replied: "Ther mistake in description of land. I t would sell 82½ acres for sixty-fiv If he don't want it that way, I d to sell." The land consists of pl and portions of lots, all in what as the "irregular survey of the S. W ter of section 19," etc., and plaint duced evidence of witnesses, who, uring from the plat, testified that t but 67½ acres of the land. Plaintif troduced evidence that the present the land was considerably in exce per acre, and at the close of the ev elected to take a judgment for There was a judgment in favor of for $300 and costs. Therefrom th ants appeal. Reversed.

¶ 3. See Frauds, Statute of, vol. 22, Cent. Dig. § 312.

F. L. Anderson, for appellants. Voris & Haas, for appellee.

PER CURIAM. There are several reasons, as we think, why the judgment cannot be upheld. It will be sufficient to say that, in our judgment, a contract to sell and convey real estate is not made out. Clearly, Crew was acting in the premises as the agent of Mathes, and was seeking to make a purchase for his client. Now, the letter written by Bell cannot be construed into a contract to sell and convey, and therefore there was no agreement in writing on his part, as required by the statute of frauds. Code, § 4625. And the deposit of the money in a bank by plaintiff and his agent cannot have the effect to take the case out of the statute. Such was done without any agreement on the part of the defendant, and without his knowledge. Moreover, we do not see how there could be any right of action in any event, until it was ascertained to a certainty what was the number of acres of land, and there was an offer to pay for the actual acreage at the price alleged.

Reversed.

STATE v. BERGER.

(Supreme Court of Iowa. Oct. 29, 1903.)

CRIMINAL LAW—PRINCIPALS AND ACCESSORIES—BREAKING AND ENTERING—EVIDENCE—OTHER OFFENSES—DECLARATIONS BY ACCUSED.

1. Under Code, § 5299, abolishing the distinction between principals and accessories in the commission of crime, where an indictment charged defendant with having feloniously broken and entered a certain freight car in connection with another, he might be convicted, though the proof showed that his only connection with the crime was that of an aider or abettor.

2. Where defendant was jointly indicted with L. for breaking and entering a railroad car, it was not incumbent on the state, in order to convict defendant, to prove that L. participated in the criminal act.

3. Where defendant, with others, was charged with breaking and entering a freight car, and the proof showed that, though defendant did not participate in the actual breaking or entering of the car, he was present and standing watch while others accomplished the breaking, he was a principal, and not an accessory.

4. In a prosecution for breaking and entering a railroad car, evidence of defendant's intemperate and vagrant habits was inadmissible.

5. In a prosecution for breaking and entering a railroad car, evidence of conversations had between witness and defendant, prior to the commission of the crime, tending to show defendant guilty of other crimes, was inadmissible.

Appeal from District Court, Cerro Gordo County; J. F. Clyde, Judge.

The opinion states the case. Reversed.

Robinson & Koch and Struble & Stiger, for appellant. C. W. Mullan, Atty. Gen., and C. A. Van Vleck, Asst. Atty. Gen., for the State.

WEAVER, J. The indictment in the case charges that on the 5th day of February, 1902, in Cerro Gordo county, the defendant Berger and one A. J. Lee feloniously broke and entered a certain freight car belonging to the Chicago, Milwaukee & St. Paul Railway Company. Berger was awarded a separate trial, and, being convicted, appeals. There was no evidence tending to show that appellant himself actually broke or entered the car. The theory of the state is that appellant stood watch or guard upon or near the railway track while two other persons broke the seal, opened the door, and entered the car, at which point in the transactions they were interrupted by a detective in the employ of the company, and, after a struggle with him, they all escaped under cover of the darkness; no arrests being made until some hours later. This theory is not without support in the evidence; the detective testifying that he recognized appellant as the man standing watch outside the car, and another witness claiming to have seen him entering the yard at or about that time. If the only question before us was as to the sufficiency of the evidence to support a finding of appellant's guilty connection with the offense, we should have no serious difficulty in affirming the judgment below. But other features of the record require our consideration.

1. The appellant submitted certain requests for instructions to the jury, among which was the following: "No. 8. You are instructed that there is no evidence in this case showing that the defendant Ed. Berger broke and entered the car referred to in the indictment and the evidence in this case; and unless you find that he as accessory to or aided and abetted one A. J. Lee in breaking and entering said car, then you are instructed that you cannot find the defendant guilty, and you should acquit him." This request was refused by the court, and the following given on its own motion. "If you find from the evidence, and beyond a reasonable doubt, that at the time and place named in the indictment the witness A. J. Lee, or any other person or persons, unlawfully broke and entered the car in question, and that said car was then under the charge and control of the Chicago, Milwaukee & St. Paul Railway Company, and was sealed, and contained goods and merchandise for transportation, and that the defendant Berger aided and abetted such other person or persons in the acts just named herein, then the defendant is guilty as charged in the indictment, and you should so find." It is urged by the appellant that, having been jointly indicted with Lee for the commission of the alleged offense, he cannot be convicted of aiding and abetting "any other person or persons" not named in the indictment, and that the instruction given is therefore erroneous. Our state abolishes the distinction formerly made between principals and accessories in the commission of crime. Code, § 5299. Under this statute, it had been held that, where the indictment charges a defendant with having

nvicted upon proof that his only connec-
on with the offense was that of an aider or
ettor. State v. Hessian, 58 Iowa, 68, 12 N.
. 77; State v. Pugsley, 75 Iowa, 742, 38 N.
. 498; State v. Munchrath, 78 Iowa, 268,
N. W. 211. And two or more persons may
jointly indicted for a criminal act which
of such nature that it can be actually com-
itted by but one person. State v. Com-
ock, 46 Iowa, 265. Persons implicated in
e commission of a crime may be indicted
ointly or severally, and failure to establish
e guilt of one of the accused persons does
ot operate to discharge the others. The ap-
ellant in this case is charged with breaking
nd entering the car, and that fact is suffi-
iently established, under the authorities cit-
d, if it be shown that he assisted in the act
y standing watch while his accomplices or
onfederates effected the entrance. Now,
loes the fact that he is jointly indicted with
Lee make it incumbent upon the state to
prove the participation of Lee in the crim-
inal act, in order to convict appellant? We
think not. His guilt is not necessarily de-
pendent upon the guilt of Lee. The state's
case tends to show that appellant, with Lee
and a third person, who is unidentified, was
engaged in the criminal enterprise. It would
seem to be a necessary conclusion from our
statute and our decisions thereunder that
either of the two defendants who are jointly
indicted may be convicted upon proof that he
himself did the unlawful breaking and enter-
ing, or that he aided or abetted his codefend-
ant in such act, or that, with or without his
codefendant, he aided or abetted the unden-
tified third person in such act. If the indict-
ment, by specific allegation, charged the de-
fendant with aiding or abetting Lee in the
commission of the offense, it may well be
conceded that a conviction could not be had
upon the evidence that he aided or abetted
some other person. But such is not the case
here presented. Both defendants are char-
ged as principals, and we see no reason why
the case is not governed by the ordinary rule
which permits the conviction of either or
both if participation in the crime be estab-
lished by the evidence. In one sense of the
word, there is no such thing as a "joint" of-
fense, unless, perhaps, it be something in the
nature of an unlawful combination or con-
spiracy. Persons may act jointly in the
commission of crime, but in the eye of the
law each is guilty of the offense committed,
to which he has contributed, to the same ex-
tent as if he were the sole offender. State v.
McClintock, 8 Iowa, 203. If this indictment
had been procured by the state on the theory
and belief that appellant and Lee were the
persons who actually broke and entered the
car, and were the only persons in any way
implicated in that crime, but upon the trial
it was developed beyond all doubt that such
breaking and entering were in fact done by
some person or persons unknown, and that
by standing watch outside, no one, we think,
would contend that such proof constitutes
any variance from the indictment, or enti-
tles either Lee or appellant to an acquittal.
If, then, we proceed further, and suppose the
evidence entirely fails to connect Lee with
the offense in any manner whatever, but
does clearly establish appellant's complicity
therein, we know of no principle or precedent
upon which the latter may demand an ac-
quittal because of the failure to establish the
guilt of Lee. There was no error in the in-
struction given by the court. It may prop-
erly be observed in this connection that, al-
though appellant may not himself have par-
ticipated in the actual breaking or entering
of the car, yet if he was present, aiding or
abetting such act by standing watch while
others accomplished that criminal proceed-
ing, he is not a mere accessory, even at com-
mon law, and any analogy drawn from deci-
sions in respect to the peculiar rules appli-
cable to the prosecution and conviction of
accessories is not applicable here. "An ac-
cessory is one who is not the chief actor in
a felonious offense, not present at its per-
formance, but is in some way connected
therein, either before or after the act com-
mitted." 1 Am. & Eng. Ency. Law (2d Ed.)
257. Every person who is present at the
commission of a crime for the purpose of as-
sisting in its accomplishment, either by per-
forming the principal felonious act, or by
standing watch or by waiting in reserve,
ready to render such aid as may be necessary
to the success of the common criminal pur-
pose, is a principal, both at common law and
under the statutes, even though he take no
other part in the unlawful transaction.

2. One McGahn, a witness for the state,
was permitted to testify that during his resi-
dence in Mason City, appellant did nothing
in particular, except to walk the streets, and
that, at some time prior to the date of the
alleged crime, appellant made the statement
that he (appellant) "had a shipment of whis-
ky coming." Another witness (one Peebles)
was also allowed to state that, two or three
months before the breaking of the car de-
scribed in the indictment, appellant had a
satchel in which he carried a bottle of whis-
ky, a glass, some rock candy, and bromo
seltzer; that at one time he exhibited a re-
volver to the witness, and at another showed
him an iron about six inches in length, the
point of which was broken off; and that ap-
pellant "said he had broken it off breaking
into a refrigerator car—done it that night."
All this evidence had reference to a time long
before the commission of the crime alleged
in the indictment, and had no relevancy to
the acts constituting that offense. Its only
apparent purpose was to discredit the appel-
lant in advance, and, by showing that he
was of vagrant or intemperate or criminal
habits, make it easier for the jury to believe
him guilty of the offense for which he was

Digitized by Google

We have recently, on several occasions, called attention to the well-established rule that an allegation of crime cannot be established by proof of independent criminal acts, or of his general disreputable character. State v. Roscum (Iowa) 93 N. W. 295; State v. Vance (Iowa) 94 N. W. 204; State v. Rainsbarger, 71 Iowa, 746, 31 N. W. 865; Boyd v. U. S., 142 U. S. 450, 12 Sup. Ct. 292, 35 L. Ed. 1077; People v. Jones, 32 Cal. 80; People v. Schweitzer, 23 Mich. 301; Com. v. Campbell, 155 Mass. 537, 30 N. E. 72. The last case cited is quite directly in point, and holds it error to permit proof of conversations with accused tending to show his general criminal character, or the commission of other offenses by him. These cases announce a familiar principle, the soundness of which is apparent. The temptation is always strong upon a prosecutor to bring to the attention of the jury any blemishes in the record of the person on trial. It is one, however, which cannot be indulged in with safety or propriety, and should be carefully avoided, save in the few exceptional cases where such evidence is clearly admissible. The error was undoubtedly prejudicial.

3. Appellant also alleges error in the ruling of the court permitting counsel for the state to cross-examine defendant upon matters not relevant or called out by the direct examination. Further complaint is made that the state was allowed to introduce impeaching testimony concerning collateral and immaterial matters. Without going into details, we will say that, in our judgment, these exceptions are not without foundation; and while we might not be disposed to reverse the judgment below, were there no other error in the record, we call attention to this feature of the case that the objection may be avoided upon retrial.

For the errors above noted, the judgment of the district court is reversed, and the cause remanded for a new trial. Reversed.

REYNOLDS v. LYON COUNTY.

(Supreme Court of Iowa. Oct. 28, 1903.)

COUNTY BONDS—LIMITATION OF INDEBTEDNESS—REFUNDING BONDS—VALIDITY—RES JUDICATA—FEDERAL COURTS.

1. Under Const. art. 11, § 3, providing that no county shall become indebted for any purpose to an amount exceeding 5 per centum on the value of the taxable property within the county, refunding bonds, the proceeds from the sale of which are to be applied to the payment of those outstanding, and which increases the aggregate debt beyond the constitutional limit, are invalid.

2. A county issued bonds exceeding the constitutional limit, which it sold to liquidate the outstanding bonded indebtedness. The money of the bondholders was paid to the financial agent of the county for their sale on the implied representation that they were valid, and it was applied to the discharge of its indebtedness up to the constitutional limit. *Held* that, debtedness arose against it out of the sale of the bonds and application of the proceeds to valid claims against the county.

3. Where an indebtedness arising from the sale and application of the proceeds of refunding bonds to valid claims of the county with other valid obligations of the county exceed the constitutional limitation, other refunding bonds issued by the county are invalid.

4. Where, in a suit against a county, in which other items of indebtedness were involved, the controverted question was whether certain bonds, or the transaction by which they were issued, sold, and the proceeds paid on valid claims of the county, created an indebtedness against the county, and precisely the same question is raised in a subsequent action between the same parties, the decision in the former action is res judicata.

5. Where a federal court and a state court have concurrent jurisdiction over matter in issue, the adjudication in one is binding on the other.

6. Where in a suit by a bondholder against a county the plaintiff claims that the county's obligations are the same as though certain other evidences of debt had not existed, a contention that a nontaxpayer cannot question the validity of the county's evidence of debt is without merit.

Appeal from District Court, Lyon County; F. R. Gaynor, Judge.

On April 5, 1880, the board of supervisors of Lyon county ordered the bonding of the floating indebtedness of the county, and on June 1st following the five bonds in amount of $500 each, bearing 7 per cent. interest, payable semiannually, were issued to Chase & Taylor to take up outstanding warrants. These were transferred to the Equitable Life Insurance Company of Des Moines, and later by it to the plaintiff. Several defenses were interposed, but on hearing judgment was entered for plaintiff, and the county appeals. Affirmed.

E. C. Roach and E. Y. Greenleaf, for appellant. Parsons & Riniker, for appellee.

LADD, J. Lyon county was organized in January, 1872, and immediately proceeded to create an indebtedness, in utter disregard of section 3, art. 11, of the state Constitution, which reads: "No county, or other political or municipal corporation, shall be allowed to become indebted in any manner, or for any purpose, to an amount in the aggregate exceeding five per centum on the value of the taxable property within such county or corporation—to be ascertained by the last state and county tax lists, previous to the incurring of such indebtedness." By July 28, 1873, it had issued judgment bonds to the amount of $55,000. Operations were then suspended until October 19, 1874, from which time up to June 4, 1879, funding bonds to the amount of $55,300 were turned out. On July 1, 1879, in pursuance of a resolution of the board of supervisors of April 3d previous, the county issued and sold bonds known as the "Shade Bonds," in the sum of $100,000, for the purpose of liquidating the outstanding bonded indebted-

---

¶ 5. See Judgment, vol. 30, Cent. Dig. § 1518.

Digitized by Google

ness of the county. Of the proceeds derived therefrom $53,500 was applied in satisfaction of the judgment bonds first mentioned, and the remainder to the payment of the $47,-300 of the refunding bonds. Aside from the debts mentioned, 12 judgments were rendered against the county between July 24, 1873, and May 14, 1878, inclusive, but all these had been satisfied by the bonds referred to by cash or warrants, and no judgments were entered after the last-named date. Funding bonds were issued January 8, 1880, for $600; May 12, 1880, $11,600; and June 1, 1880, $6,800. Included in the last were the bonds in controversy. On June 1, 1880, there were also outstanding $4,259 in county warrants. It is unnecessary to detail subsequent transactions farther than to say that on May 1, 1885, there was an issue of $120,000 in bonds, from the proceeds of which the bonds of July 1, 1879, were fully paid. The assessed valuation of the property of the county for each year is stipulated, and as a result of computation it appears that the maximum limit of indebtedness permissible June, 1880, was $49,517, and that the highest previous to that time was $54,067.80 in 1876. It is manifest, then, that the bonds issued from October 19, 1874, to June 4, 1879, were void, for there were then outstanding those dated prior to July 28, 1873, which alone exceeded the constitutional limit. Was the issue of July 1, 1879, also void? This, according to appellant, is the crucial question in the case, for it will be observed that, if the $100,000 in bonds of that date be regarded valid, there was an outstanding indebtedness of $131,-259, when the plaintiff's bonds were issued, and hence they were in excess of the limit fixed by the Constitution. But, if such bonds were invalid, such indebtedness was but $31,-259, and the county had authority to execute the bonds. It is well to note that the bonds of July 1, 1879, were actually disposed of before the proceeds derived therefrom were applied on the bonds outstanding. This resulted during the time intervening in an additional indebtedness of $100,000, or double that amount in all. Recurring to the article of the Constitution quoted, we observe that the county is prohibited from becoming indebted in any manner or for any purpose beyond the limit. It may not, then, incur any pecuniary liability by bonds, notes, or by express or implied promises. No purpose, however urgent or useful, will suffice. The existing indebtedness, if equal to the amount limited, is an insurmountable obstacle to the creation of further debt in any manner or for any purpose. Litchfield v. Ballou, 114 U. S. 190, 5 Sup. Ct. 820, 29 L. Ed. 132. In District Tp. of Doon v. Cummins, 142 U. S. 366, 12 Sup. Ct. 220, 35 L. Ed. 1044, a statute of this state authorizing a school treasurer to sell bonds and "apply the proceeds thereof to the payment of the outstanding bonded indebtedness of the district," or exchange such bonds for outstanding bonds,

was under consideration, and the
declaring the portion quoted contra
prohibition of the Constitution, said
is a wide difference in the two alt
which this statute undertakes to
The second alternative of exchangi
issued under the statute for ou
bonds, by which the new bonds, a
issued to the holders of the old on
be a substitute for and an extinguis
them, so that the aggregate outsta
debtedness of the corporation woul
increased, might be consistent with
stitution. But under the first altern
which the treasurer is authorized t
new bonds, and to apply the procee
sale to the payment of the outstand
it is evident that if [as in the cas
new bonds are issued without a can
or surrender of the old ones, the a
debt outstanding, and on which the
tion is liable to be sued, is at once a
sarily increased, and, if new bonds
amount to the old ones are so issue
time, is doubled; and that it will r
the increased amount until the pro
the new bonds are applied to the
of the old ones, or until some of th
tions are otherwise discharged. It
that, if the proceeds of the sale are
the municipal officers, as directed
statute, in paying off the old debt, th
gate indebtedness will ultimately be
to the former limit. But it is none
true that it has been increased in t
val, and that, unless those officers
duty, the increase will be perman
would be inconsistent alike with th
and with the object of the constitutio
vision, framed to protect municipal
tions from being loaded with debt b
certain limit, to make their liabilit
charged with debts contracted beyo
limit depend solely upon the discretio
honesty of their officers." In the dis
opinion this construction was denou
purely technical, as the object of the
was, not to create a new or increase
indebtedness, but merely to change it
and reduce the interest rate. The d
in this suggestion is that a new deb
the time being created, and one day's
uation of it in addition to that evide
the old bond is as much within the c
nation of the letter and spirit of the
tution as that of a year. It won't do
that officers may be relied upon to
proceeds derived from the sale of b
wipe out existing obligations. In th
these were not so applied. The very
of this article of the Constitution is
tect the interests of the people agains
own improvidence and extravagance.
bonds are not within the prohibition, it
be within the power of dishonest offic
indirection to circumvent the funda
law, and through diversion of the p
of new bonds saddle both them and t

Digitized by Google

Said Corliss, C. J., in Birkholz v. Dinnie, 6 N. D. 514, 72 N. W. 931, in reaching a like conclusion: "Aware of the ingenuity with which restrictions on power are circumvented in great exigencies, the framers of our organic law employed the most sweeping language to prevent such devices being successful. The instrument declares that never shall the debt exceed the specified percentage of the assessed value. No matter for what purpose created, or under what circumstances, or how pressing the emergency, or how short the indebtedness is to continue, if it will in fact increase the obligations of the municipality beyond the constitutional limit, it falls within the letter and the spirit of the Constitution. To give to section 183 so lax a construction that the debt limit may be passed by the sale of refunding bonds is both dangerous and unwarrantable." To the same effect, see, also, State v. McGraw, 12 Wash. 544, 41 Pac. 894; Bannock Co. v. Bunting & Co. (Idaho) 37 Pac. 277. Apparently opposed to these views will be found several decisions. Thus, in City of Los Angeles v. Teed, 112 Cal. 327, 44 Pac. 580, in construing an article of the Constitution like that in the last case cited, the court said: "Merely to fund or refund an existing debt is not to incur an indebtedness or liability. A bond is not an indebtedness or liability. It is only an evidence of representation of an indebtedness. And a mere change in the form of the evidence of the indebtedness is not the creation of a new indebtedness within the meaning of the Constitution." That was an action to compel the signing of bonds by the proper officials. The language quoted is not inconsistent with the conceded power to exchange such new bonds for outstanding obligations. Heins v. Lincoln, 102 Iowa, 74, 71 N. W. 189. That was the conclusion in the Opinion of the Justices, 81 Me. 602, 18 Atl. 291, and the other authorities cited. See, also, Powell v. City of Madison, 107 Ind. 106, 8 N. E. 31.

2. Of the proceeds of the bonds issued July 1, 1879, $53,500 were applied in payment of the $55,000 bonds dated prior to July 28, 1873. The assessed valuation of the county in 1872 was $499,099.96, and under the ruling of Wilkinson v. Van Orman, 70 Iowa, 230, 30 N. W. 495, this, rather than that of 1873, must control. Five per cent. thereof would be $24,954.99, and to this extent the bonds were valid. McPherson v. Foster, 43 Iowa, 48, 22 Am. Rep. 215. To this amount the proceeds of the Shade bonds were applied in discharge of a valid existing indebtedness of the county. If thereby an indebtedness in that sum was created against the county, its debt exceeded the constitutional limit when plaintiff's bonds were issued. The money of the bondholders was paid to Shade, the financial agent of the county for their sale, on the implied representation that they were valid, and, as said, at least $24,954.99 of it applied on its valid indebtedness. Had bonds in the order of their issue, there could be no doubt of their validity. Or suppose the bondholders, instead of buying the Shade bonds, had intrusted the county officers with the money, and this had been made use of to discharge the $24,954 of debts created by the county. Can it be doubted that they might recover the amount advanced? Certainly it could not be claimed that this transaction would have increased the county debt, for it would merely be the exchange of one form of indebtedness to another. The fact that the bondholders were first induced to part with money for this identical purpose by the expectation of receiving valid bonds, and thereafter such money so appropriated can make no difference. The county obtained the money without consideration, and, in so far as it appropriated the same to the discharge of its valid indebtedness up to the constitutional limit, it was under the implied obligation to make restitution. During its retention by the county the bondholders might have laid claim to it at any time, and could have enforced its surrender by replevin. It was not appropriated until applied on the outstanding debt. By receiving and so applying it to the satisfaction of a valid existing debt, the county by implication undertook to repay to the extent of the limitation. Possibly a county may be estopped from denying the validity of bonds executed for refunding purposes, the proceeds of which are actually used in satisfying existing debts within the constitutional limit. Whether so might become important upon interposition of the statute of limitations. We are concerned now only in ascertaining the extent of the indebtedness on June 1, 1880, regardless of whether evidenced by bonds or arising from implied obligations to pay. In either event the holders of the Shade bonds held a valid claim against the county at that time. See Ætna Life Ins. Co. v. Lyon Co. (C. C.) 82 Fed. 929; Everett v. Ind. School Dist. of Rock Rapids (C. C.) 109 Fed. 697. The definition of debt was fully considered in Swanson v. Ottumwa, 91 N. W. 1048, 59 L. R. A. 620, and manifestly includes such an obligation as arose in this case. The prohibition is against becoming indebted in any manner. In Ashuelot National Bank v. Lyon County (C. C.) 81 Fed. 127, a different view seems to have prevailed, apparently on the ground of the uncertainty of a recovery on the Shade bonds in event of suit, and owing to their subsequent payment. We fail to understand how either of these considerations can be deemed controlling. If the obligation to pay existed June 1, 1880, the date of the bonds in suit, such obligation constituted a debt of the county; and whether a claim be thereafter asserted against the county, or the bonds are subsequently paid, is wholly immaterial. The question is whether there was an indebtedness at that time, and not the disposition subsequently made of it. The

Digitized by Google

yet denying the right of the county to have such indebtedness declared valid and included as a debt in estimating whether the constitutional limit had been exceeded, is manifest. The form of the remedy available is entirely immaterial. The ultimate questions are, did an indebtedness on the part of the county arise out of the transactions by which the Shade bonds were issued, sold, and the proceeds applied on valid claims against the county; and, if so, did such indebtedness, with other valid obligations of the county at the date of the bonds, exceed 5 per cent. of the assessed value of the property of the county in 1878? The first of these must be answered in the affirmative, and the last in the negative, and the result is that plaintiff's bonds must be declared void unless this has been obviated by a former adjudication.

3. In March, 1895, this plaintiff brought suit in the federal court on certain coupons cut from the bonds sued on in this action, and also upon four bonds issued by the defendant county March 1, 1885. Precisely the same defenses were interposed as in this case, save that of res adjudicata. Before trial all of the defenses to the count of the petition based on the coupons, except that of the bar of the statute of limitations, were withdrawn. As to the bonds, it was claimed on behalf of the county that the outstanding indebtedness when these were issued exceeded the constitutional limit. The court in finding otherwise rejected the so-called "Shade Bonds" of July 1, 1879, as constituting an indebtedness. The evidence conclusively shows that the point there directly in issue was whether, notwithstanding the invalidity of the bonds, the transaction of issuing and selling them, and the payment of a valid indebtedness of the county, created a debt against it within the meaning of the Constitution—precisely that which is the controlling question of this case. On this ground the plaintiff interposes the plea of former adjudication, and it must be sustained. In the early case of Haight v. City of Keokuk, 4 Iowa, 199, in the course of the discussion, it was said that the matter pleaded in bar must have been included in the pleadings in the former suit. But in Carl v. Knott, 16 Iowa, 379, it was held that: "The question to be determined is not whether the matter now in controversy was included in the issue joined in the former suit, but whether the judgment or determination was such as to estop the party from again claiming for the same demand. It would thus be included if it was covered by or embraced in the proceedings, and to be so embraced it is only necessary that it should always appear affirmatively from the face of the record." Again, in Whitaker v. Johnson County, 12 Iowa, 599: "The estoppel of a judgment extends to the whole matter in dispute in the to the judgment. The judgment itself is sometimes said to operate as the bar, and the decision of a particular issue as an estoppel; but the conclusive effect of both is the same, and depends on the same principle —that which has once been judicially determined shall not again be made the subject of judicial controversy." See, also, Hahn v. Miller, 68 Iowa, 745, 28 N. W. 51; Shirland v. Union National Bank, 65 Iowa, 96, 21 N. W. 200; Davis v. City of Clinton, 58 Iowa, 389, 10 N. W. 768; Thomas v. McDonald, 102 Iowa, 564, 71 N. W. 572. That the matter need not necessarily appear in the pleadings farther appears from Goodenow v. Litchfield, 59 Iowa, 226, 9 N. W. 107, 13 N. W. 86, where the rule is said to be settled "that, where a former judgment or decree is relied upon as a bar to an action, it must appear either by the record or by extrinsic evidence that the particular matter in controversy and sought to be concluded was necessary, tried, and determined in the former action." The expression in the Haight Case must, in the light of these subsequent decisions, be regarded as dicta, and the matter actually in issue, whether so indicated by the pleadings or not, when fairly adjudicated, may be pleaded in bar in a subsequent action between the same parties. The prevailing rule is well expressed in Black on Judgments, § 614, that we quite with approval: "The doctrine of res judicata does not rest upon the fact that a particular proposition has been affirmed and denied in the pleadings, but upon the fact that it has been fully and fairly investigated and tried; that the parties have had an adequate opportunity to say and prove all that they can in relation to it; that the minds of court and jury have been brought to bear upon it, and so it has been solemnly and finally adjudicated. Now, these conditions are fully met when any question, though foreign to the original issue, becomes the decisive question—the turning point—in the case. In that event it will receive just as full and exhaustive an examination as if it were the sole subject-matter of a distinct and independent suit, and therefore should be considered as much settled by the judgment as if it stood alone as the issue in the case. For these reasons the more correct doctrine is that the estoppel covers the point which was actually litigated, and which actually determined the verdict of finding, whether it was statedly and technically in issue or not." Watson v. Richardson, 110 Iowa, 698, 80 N. W. 416, 80 Am. St. Rep. 331; Bigelow on Estoppel, 90; City of New Orleans v. Citizens' Bank, 167 U. S. 371, 17 Sup. Ct. 905, 42 L. Ed. 202. In the former suit, though other items of the county's indebtedness were involved, the controverted question was whether the Shade bonds, or the transaction by which they

Digitized by Google

cisely the same question is raised in this action, and is equally as controlling. Having once been litigated by the parties, it must be treated as res adjudicata. Appellant suggests these were merely matters of evidence, but it is apparent that they establish an ultimate fact—i. e., whether an indebtedness was created by that transaction; and the finding of the court was necessarily one of fact, and for the purposes thereof the law applied must be accepted. Bigelow on Estoppel, 100. True, the court there held that the evidence did not establish an indebtedness exceeding the constitutional limitation, but in reaching that conclusion necessarily found as a fact that the transaction by which the Shade bonds were disposed of and the proceeds applied on a valid debt of the county did not raise an obligation on the part of the county to repay. The law as applied was incidental to this finding of fact, which we think constituted an adjudication of the precise question presented in this case.

It is also suggested that the former decree ought not to be sustained as an estoppel, because the bonds were issued to the residents of this state, and the federal court could not have acquired jurisdiction. It is sufficient answer to say that the record fails to show that the payees named in the bonds were residents of Iowa at the time they were executed or assigned, as contended. As the courts had concurrent jurisdiction over the matter in issue, the adjudication in one action was binding on the other. Black on Judgments, § 520.

There is nothing in the argument that one not a taxpayer ought not to be permitted to question the validity of the county's evidences of debt. The claim is, not that these were merely voidable, but that the county's obligations are the same as though such evidences of debt had never existed.

We reach the conclusion that the evidence of the former adjudication is conclusive, and that the judgment must be and is affirmed.

WOODRING et al. v. ROONEY et al.

(Supreme Court of Iowa. Oct. 29, 1903.)

COURTS—PLACE OF TRIAL—CHANGE.

1. Acts 28th Gen. Assem. p. 6, c. 10, provides that in all civil cases in the superior court, where any party defendant shall, before pleading, file a motion for a change of venue to the district court of the county, supported by affidavit showing that he was not a resident of the city where the court is held at the time of the commencement of the action, the cause shall be transferred to the district court of the county. *Held*, that where a defendant, sued in the superior court of the city of Cedar Rapids, before pleading, filed a motion for change of venue, supported by affidavit that he was a nonresident of the county in which such city was located, it was error to refuse the motion.

Defendant Blotz defaulted. The defendant Rooney appeared, and, before pleading, filed a motion, supported by affidavit, setting forth that he was a nonresident of Linn county, in which county the city of Cedar Rapids is situated, and asking to have the place of trial changed to the district court of Linn county. This motion was overruled, and thereupon the defendant answered, and there was a trial upon the merits, resulting in a judgment in favor of plaintiffs. The defendant Rooney appeals. Reversed.

Jamison & Smyth, for appellant. John A. Reed, for appellees.

BISHOP, C. J. The error assigned has relation only to the ruling of the court below upon the application of defendant for change in place of trial to the district court. We think there was error in overruling such application. As the law formerly stood, a change of venue in civil actions could be taken from a superior court for such causes and with such effect only as obtained in changes of venue taken in actions pending in the district court. But this was changed by chapter 10, p. 6, Acts 28th Gen. Assem.; and there was added to the statute the further provision "that in all civil cases where any party defendant shall, before pleading is filed by him, file in said cause a motion for a change of venue to the district court of the county, supported by affidavit, showing that such party defendant was not a resident of the city where such court is held, at the time of the commencement of the action, the cause upon such motion shall be transferred to the district court of the county." The evident purpose of this addition to the former statutory provision was to enable any person made defendant in an action brought in the superior court, and who was at the time a nonresident of the city, to have the cause tried and determined in the district court. We see no reason why force should not be given to the plain reading of the statute, and the benefit thereof, without qualification, granted to any nonresident defendant who makes proper and timely application therefor.

The judgment of the superior court is reversed, and the cause is remanded, with directions to grant a change to the district court of Linn county, in accordance with the application of defendant. Reversed.

SLEIGHT et al. v. SUPREME COUNCIL OF MYSTIC TOILERS et al.

(Supreme Court of Iowa. Oct. 29, 1903.)

BENEFICIAL ASSOCIATIONS — CERTIFICATE — CONSTRUCTION — ASSESSMENTS — PAYMENT —ACTION AT LAW—OBJECTIONS—WAIVER—FUNERAL AND MONUMENT BENEFITS—RECOVERY—PREMATURE ACTION—EVIDENCE.

1. In an action to recover benefits under a certificate of a beneficial association, a circular

Digitized by Google

etc., which was not referred to or made a part of the certificate, which provided that such exemption from forfeiture should apply only to members of at least one year's standing, was inadmissible.

2. In an action on a benefit certificate, a circular not identified as coming from defendant, and not proved to have ever been seen or relied on by assured before becoming a member of the society, was inadmissible.

3. In an action on a benefit certificate, purported receipts for assessments and dues, not identified, were inadmissible.

4. Where a benefit certificate provided that members of one year's standing should not be subject to forfeiture of membership for failure to pay assessments during sickness, if unable to do so, such exemption did not apply to a member who had not been such for one year at the time of default in payment.

5. Where the certificate of a beneficial association provided that the beneficiary should only be entitled to receive the proceeds derived from an assessment on its members, and defendant had no other means of paying its certificates, and the constitution of the society provided for an equalization fund, which might be drawn on for the payment of death losses when the death rate exceeded 12 per year, a beneficiary under such certificate was not entitled to maintain an action at law to recover death benefits thereunder.

6. Where a beneficiary in a mutual benefit certificate erroneously brought suit at law thereon, defendants did not waive such objection by failing to move to transfer the cause to the equity docket.

7. Where a benefit certificate entitled the beneficiary to the proceeds of an assessment on the members of the society, the beneficiary was not entitled to maintain an action for damages thereon in the absence of an allegation that the society had in its hands money collected by assessment, which it was in duty bound to pay to plaintiffs.

8. Where a benefit certificate provided that the society would pay $100 to the person erecting a monument for the member, in case a more expensive monument than could be purchased for $100 was desired, on condition that the insignia of the order was placed in a conspicuous place thereon, etc., the member's relatives were not entitled to recover such sum in the absence of proof of compliance with such conditions.

9. Where a benefit certificate provided for a payment of $100 for the erection of a monument within six months after proof of member's death, an action brought by the member's relatives to recover such sum before such six months had elapsed was premature.

10. Where a benefit certificate provided for the payment of a funeral benefit to the member's next of kin, or the person having charge of the burial, such benefit was not recoverable in the absence of an allegation that plaintiffs were the member's nearest of kin, or had the burial in charge.

Appeal from District Court, Linn County; W. G. Thompson, Judge.

Action at law upon a benefit certificate issued by the defendant the Supreme Council of the Mystic Toilers. Trial to a jury, verdict and judgment for the plaintiffs, and defendants appeal. Reversed.

Sager & Sweet, for appellants. Heins & Heins, for appellees.

DEEMER, J. February 8, 1900, Laura A. Sleight was admitted to membership in the in case of the death of said member are hereby entitled to receive from the benefit fund * * * the amount of one assessment for each contributing member, not to exceed the sum of one thousand dollars. But the right to receive such payment in case of death or disability is to be governed by the provision, conditions, and limitations contained in the articles of incorporation, constitution and laws, rules and regulations of the society." The certificate also provided the following benefits:

"Fourth. For funeral expenses to each member, one hundred dollars, in addition to the benefits named in each member's benefit certificate or benefit certificates, payable as provided by the constitution and laws.

"Fifth. For a monument to each member one hundred dollars, in addition to the benefits named in such member's benefit certificate or benefit certificates, payable as provided by the constitution and by laws. The benefits enumerated in this benefit certificate are subject to further explanation, regulations and amendments, from time to time, by the constitution and laws of the Supreme Council of the Mystic Toilers."

The constitution and by-laws contain the following somewhat obscure provisions with reference to the payment of these additional benefits:

"Funeral Benefits. As soon as it shall come to the notice of the president or secretary of a subordinate council, that a death of a member of this society has occurred, and that such member is in good standing in this society, it shall be his or her duty to make known such fact in the quickest possible manner to the supreme secretary, giving the member's name in full; who shall at once upon receipt of such notice, together with the supreme president, draw an order for one hundred dollars on the benefit fund of the supreme council and forward the same to the subordinate secretary, who shall immediately pay the same to the nearest of kin of the deceased member, or to the one having the burial of such member in charge, taking a receipt therefor as provided by the supreme secretary; it being understood by all parties in interest that this amount of one hundred dollars, shall be paid towards defraying the funeral expenses, and for no other purpose whatever; and in no case shall such payment be construed and accepted as any evidence of a member's good standing, or the validity of such member's claim against this society—until all such funeral expenses are paid; nor shall this funeral benefit be deducted from the face of the benefit certificate of such deceased member."

"Monument. Within six months of the time that satisfactory proofs of death of a beneficial member of this society has been filed with the supreme secretary, there sha-

Digitized by Google

shall be engraved the insignia of this society in a conspicuous place, unless the relatives or beneficiaries of such member notify the supreme secretary and decide that they wish to erect a monument costing more than one hundred dollars; in that event after the monument which is to bear the insignia of this society in a conspicuous place has been erected at the grave of such member, and satisfactory proofs thereof upon blanks furnished by the supreme secretary have been made to the supreme secretary, then the supreme president shall draw an order upon the supreme benefit fund and pay one hundred dollars to the relatives or beneficiaries who erected the monument. But should either a relative or beneficiary, make known to the supreme secretary that he wishes to erect such monument costing more than $100.00, and should not do so within one year of the date of filing of proof of death of such member, then the supreme secretary shall at once cause to be erected such monument as at first contemplated by this society all right for so doing having been delegated by the deceased member, by complying to all the laws of this society, so far as he or she was capable of doing. The amount of $100 for monument herein mentioned shall not be deducted from the face of the benefit certificate of the member, but is understood to be a special provision for this special purpose."

The constitution and by-laws also contained the following:

"Should a member at any time after he or she has been initiated into the subordinate council over one year become financially unable to pay his or her dues and assessments, or by sickness be so reduced financially, that he or she cannot pay his or her dues or assessments, then if such distressed member will notify in writing the president of his or her subordinate council, it shall be his or her duty to make an investigation; and if such facts prove to be so, the president of the subordinate council shall, first by voluntary subscription try to raise the money to keep the dues and assessments of such member paid; if not able to do this in the manner above stated, then the president shall order the secretary to draw orders upon the treasurer of the subordinate council to pay such dues and assessments."

Laura A. Sleight died on or about October 1, 1900, and, the defendant association refusing to recognize any liability under the certificate, this action was brought by the beneficiaries therein to recover the promised benefits. The action is at law. Defendants interposed many defenses, the principal one being that the deceased member failed to pay her assessments and dues as required by the rules and regulations of the association, and was suspended long prior to her death. In reply, plaintiffs, among other In the original petition plaintiffs also pleaded: "That, for the purpose of inducing members to enter and become members of said association, the Supreme Council of Mystic Toilers caused to be printed and circulated a circular, in which, among other provisions, are the following: 'A member cannot be suspended when sick or disabled, and not financially able to pay the assessments, provided he notifies the secretary of the lodge to which he belongs before he becomes delinquent.' That the deceased, Laura A. Sleight, was so sick and disabled, and not financially able to pay her assessments, of which fact the secretary of the lodge was duly notified, and had full and complete knowledge." Defendant moved to strike out these last-quoted allegations from the petition, but its motion was overruled. We think it should have been sustained. While this circular may have been an inducement to the making of the contract, it was no part of it, and it should have no place in a pleading seeking to recover the promised benefits. Congower v. Ass'n, 94 Iowa, 499, 63 N. W. 192.

At the trial, plaintiffs were permitted to introduce a circular which embodied some of the statements pleaded. This circular was not identified as coming from the defendant, nor was there any evidence that the insured ever saw or relied upon it before becoming a member of the society. Defendant's objection to this document should have been sustained. Plaintiffs say that, conceding the error, there was no prejudice, for the reason that the articles of incorporation, constitution, and by-laws introduced by defendant contain substantially the same matter. But this is a mistake. There is a material difference between the statements in this circular and the provisions of the by-laws. By the latter provisions, one who had been a member for one year could not be suspended if sick or disabled, etc. The circular makes no such qualification. As the insured had not been a member for one year, she was not entitled to plead her sickness or disability as an excuse for nonpayment of dues and assessments. It is easy to imagine what effect this circular may have had upon the jury. Prejudice is very apparent.

Over defendant's objections, plaintiffs were permitted to introduce some papers which purported to be receipts for the payment of assessments and dues. These were not identified in any manner, and should not have been received.

Defendant asked an instruction to the effect that the provision excusing payment of assessments and dues did not apply to the facts of this case, but the instruction was refused. It should have been given.

2. The principal contention in the case is, will an action at law lie for any of the benefits promised in the certificate, the ar-

Digitized by Google

ticles of incorporation, constitution, and by-laws of the defendant association? The action is to recover death, funeral, and monument benefits, aggregating in all $1,200. The jury returned a verdict for $1,190, allowing a credit to defendant of $10, as provided in an article of the constitution and by-laws, which need not be set out. In various ways, defendant challenged plaintiffs' right to recover any of these benefits in an action at law. As to the recovery of death benefits, the matter is foreclosed by the cases of Rambousek against this same association, reported in (Iowa) 93 N. W. 277, wherein it is held that an action at law will not lie. Plaintiffs attempt to distinguish this case from that, but as to death benefits there is manifestly no distinction. They also say that defendants' remedy, if they had any, was by motion to transfer the case to the proper docket, and, as they did not file such motion, they are in no position to avail themselves of the point now made. This is also fallacious. Newman v. Continental Ass'n, 72 Iowa, 245, 33 N. W. 662. Besides, plaintiffs are suing for other than death benefits, and as to some of these an action at law will lie; hence a motion to transfer would not have been availing. Furthermore, they say that the Rambousek Case is in conflict with Hart v. Accident Ass'n, 105 Iowa, 717, 75 N. W. 508. But this is not true. In the Hart Case the certificate provided for the payment of fixed sums, not exceeding a certain amount. In this case, as in the Rambousek Case, the certificate contained no such promise. The agreement was that plaintiffs were to receive from the benefit funds the amount of one assessment from each contributing member, not exceeding the sum of $1,000. In that respect the case is similar to Bailey v. Mutual Ben. Ass'n, 71 Iowa, 689, 27 N. W. 770, and other like cases. The cases are also alike, in that in each an advance assessment is contemplated and provided for. The Rambousek Case also distinguishes the Hart Case, which distinction we still think is sound, although a mistake was made in that case in stating that the number of assessments per year was limited to 7, whereas it should have been stated as 12. This mistake does not affect the principle announced, for what was called the "equalizing fund" cannot be resorted to in this case. Moreover, even if it should be held that plaintiffs were entitled to maintain an action at law for damages, they should have alleged that the society had in its hands money collected by assessment, which it was in duty bound to pay to plaintiffs. Congower v. Endowment Ass'n, 94 Iowa, 499, 63 N. W. 192; Newman v. Covenant Mutual Ass'n, 72 Iowa, 242, 33 N. W. 662; Tobin v. Society, 72 Iowa, 261, 33 N. W. 663. This they did not do. This point was distinctly made in a motion in arrest of judgment, and the motion should have been sustained. Neskern v. Northwest-

ern Ass'n, 30 Minn. 406, 15 N. W
not in conflict with our holding.
case there was nothing suggestive
thought that defendant's liability
pendent upon the collection receiv
an assessment. So much as to death

3. As to the funeral and monume
fits: These were not made depende
an assessment. On the contrary,
an express promise to pay them as
in the constitution and by-laws of
sociation. Turning now to the pr
of the constitution and by-laws with r
to monument benefits, as before quo
without repeating them, it will be s
the sum of $100 is to be paid for the
of a monument within six monti
proofs of death are filed, unless the r
or the beneficiary notify the socie
they wish a more expensive monum
that event certain conditions are to
formed by them, whereupon payment
shall be made to the party erecting th
ment. This was understood to be a
provision for a special purpose. A
for the purposes of the case that th
ficiaries or relatives may bring act
this benefit, they must bring the
within the terms and conditions
promise. This they have not done.
over, the amount was not due u
months after proofs of death were fil
the association. Mrs. Sleight died
4, 1900, and this action was commen
ruary 16, 1901. The six months h
elapsed, and the action was prem
brought. Defendant's denial did not
this provision of the policy. Quinn
surance Co., 71 Iowa, 615, 33 N. W. 13
funeral benefits were payable to the
of kin of the deceased, or to the pers
ing the burial of the member in c
this amount to be paid towards de
the funeral expenses, and for no oth
pose; and the amount is only to be
when the member is in good standi
will be noticed that this is payable
nearest of kin, or to the person havi
burial in charge, towards defrayi
funeral expenses. Plaintiffs did not
that they were nearest of kin, nor tha
had the burial of the member in
They did, perhaps, plead facts from
it should be inferred that the memb
in good standing, but they did not sho
they were entitled to the funeral be
These questions were all raised in
forms, but were disregarded by th
court.

Defendants' motion for a new tri
in arrest of judgment should have bee
tained.

Some other matters are discussed by
sel, but as the foregoing are controllin
effectually dispose of the case, it is not
sary to consider them.

For the errors pointed out, the jud
is reversed.

Digitized by Google

WELLS v. KELLEY.

(Supreme Court of Iowa. Oct. 28, 1903.)

MECHANICS' LIENS—PROPERTY IN CUSTODIA LEGIS—EMPLOYÉ'S RIGHT TO LIEN.

1. Under Code, §§ 4019, 4020, providing that property of a corporation seized under process of any court, or placed in the hands of a receiver, etc., to pay debts, shall be subject to labor liens, and requiring the presentation of a notice of claim for the lien before sale, where personal property of a corporation is seized by a deputy sheriff, acting for the chattel mortgagee, and is advertised for sale pursuant to the mortgage, a notice presented by an employé does not create a lien on the fund derived from the foreclosure sale, as such sections are not applicable to a foreclosure by notice and sale.

Appeal from District Court, Polk County; S. F. Prouty, Judge.

Action to enforce a laborer's lien. There was a demurrer to the petition, which was sustained. Plaintiff elected to stand on his petition, and refused to plead over. Judgment in favor of defendant for costs, and plaintiff appeals. Affirmed.

J. L. Witmer, for appellant. Berryhill & Henry, for appellee.

BISHOP, C. J. The facts appearing from the petition are substantially as follows: Prior to March 24, 1902, J. D. Wells & Sons Co., a corporation, had executed to F. Bacon a chattel mortgage on all the property owned by it. On said date the defendant, who is said to be a deputy sheriff of Polk county, acting for and at the request of said mortgagee, took possession of all the mortgaged chattels, and, having advertised the same for sale by posting notices as required by the terms of the mortgage, sold the property on April 4, 1902, at public auction, and thereafter accounted to the mortgagee for the proceeds thereof. It appears that said defendant, in preparing the notices to be posted, and in making account of the sale, used printed blanks found in the sheriff's office, designed and intended to be used in connection with sales made under execution. In the notice it is stated—being apart of the printed portion—that the sale will be made by "the undersigned sheriff of said county." The same is signed, however, by F. Bacon, by J. H. Kelley, agent. The account of sale is signed, "J. H. Kelley, Agent for F. Bacon." It is alleged that on April 1, 1902, there was filed with defendant, Kelley, a notice as follows: "In District Court, Polk County, Iowa. Frank Bacon vs. J. D. Wells & Sons Co. To G. W. Mattern, Sheriff: You are hereby directed to retain from the proceeds of the sale of the property in the above-entitled cause, seized upon by you, the sum of $100, and pay the same to the undersigned, for labor performed by him for defendant within ninety days prior to the seizure of the stock by you. Said amount is claimed as a preference under Code sections 4019 and 4020. A statement of the amount due is attached. [Signed] L. W. Wells, Applicant." statement of account, showing wages due L. W. Wells from J. D. Wells & Sons Co. from December 14, 1901, to March 22, 1902, at $14.50 per week; the total amount being $217.50. It is then alleged that said application was ignored by the defendant, and judgment is now asked against him for the sum of $100.

The petition is attacked by the demurrer upon two grounds: It is said in the first place that sections 4019 and 4020 have no application to the foreclosure of a chattel mortgage by notice and sale. In the second place it is said that the notice alleged to have been filed with defendant was defective, in that it was entitled in the district court, and there was no action pending in said court; that it was addressed to the sheriff of Polk county, and not to the defendant as agent for the mortgagee; that it did not state "the kind of work for which such wages are due," as required by section 4020 of the Code.

Section 4019 of the Code is as follows: "When the property of any * * * corporation shall be seized upon by any process of any court, or placed in the hands of a receiver, trustee or assignee, for the purpose of paying or securing the payment of the debts of such * * * corporation, the debts owing to the employés for labor performed within the ninety days next preceding the seizure, or transfer of such property, to an amount not exceeding one hundred dollars, shall be a preferred debt and paid in full," etc. Section 4020 is as follows: "Any employé desiring to enforce his claim for wages, at any time after seizure of the property under execution or attachment, and before sale thereof is ordered, shall present to the officer levying on such property, or to such receiver, trustee or assignee, or to the court having custody of such property, or from which such process issued, a statement under oath, showing the amount due," etc. "and the kind of work for which such wages are due, and when performed," etc. The right thus conferred by statute had no existence whatever at common law, and, in conformity to a well-known rule of construction, we are limited to the language of the statute, and the necessary implications arising therefrom, in measuring and defining the right conferred. It is the legislative will that we are to ascertain and interpret, and we may not by construction or interpretation add to or take from that which the lawmaking power has seen fit to grant as a special right or privilege, however great the necessity, or pressing the exigency. Ripley v. Gifford, 11 Iowa, 367. Where there is no ambiguity in the language employed, it must be manifest that we have no other duty than to declare in favor of enforcement according to the reading of the statute. We think the provisions of the statute in question are plain. It appears in the Code under the general head of "Executions," and, in a word, pro-

Digitized by Google

tee, or assignee, shall be subject to labor liens. It does not refer, in terms or by necessary implication, to the disposition of property otherwise than by an officer of, and pursuant to an order of, court, or under the process of a court. To hold that the statute has application to sales made pursuant to a contract of pledge, or of a mortgage of chattels, and without having recourse to the courts, or any officer thereof, would be to read into the enactment a provision which the Legislature, had it so desired, may well have included therein, but did not in fact do so. We think there was deliberate purpose in this. In the statute as originally enacted (chapter 48, p. 73, Acts 23d Gen. Assem.) it was provided that "when the property of any corporation," etc., "shall be seized upon by any process of any court; *or when their business shall be suspended by the action of creditors*, or be put into the hands of a receiver," etc. Now, it might well be said that proceedings to foreclose a chattel mortgage by notice and sale, where the effect thereof would be to suspend the business of the mortgagor, would come within the particular provision of the statute which we have italicized. But that provision was entirely omitted from the present Code, and, as we think, there was but one purpose in so doing, and that was to confine the operation of the statute to those cases where the taking of the property, or the disposition thereof, was by virtue of some process or order of court. Now in this case no court had jurisdiction of the mortgage foreclosure, and no officer of court was in possession or had control of the property. True, Kelley was a deputy sheriff, but he did not in fact, nor did he profess to, act as such. The use by him of blanks such as were kept and used in the sheriff's office could not and did not give official character to the acts done by him. He was simply an agent, and he did no more than might have been done by any other person selected by the mortgagee to act in the premises. It follows from what we have said that the notice filed by plaintiff did not have the effect to create or make effective a lien upon the fund derived from the foreclosure sale, and that the demurrer to his petition was therefore properly sustained.

Affirmed.

YOUNG v. ROTHROCK, Judge of Superior Court.

SAME v. CHADIMA BROS.

(Supreme Court of Iowa. Oct. 29, 1903.)

CONTEMPT—VIOLATION OF INJUNCTIONAL ORDER — DEFENSES — NUISANCES — OBSTRUCTION OF STREET — DEFENSES — LEGISLATIVE AUTHORITY—NECESSITY—ABUTTING OWNER —RIGHT TO MAINTAIN SUIT FOR REMOVAL.

1. A party to a suit, who violated the injunction issued therein, could not excuse the viola-

operating an ice chute in a
date, and directing the r
violated by his operating
though he changed the me
tion of the chute so as not
public travel on the street,
obviating the dangers ap
use.

3. It is no defense to a cl
violating an injunction re
from operating an ice chu
directing its removal there
the judge who issued the
defendant that it would no
injunction if he obtained
city council to use the chu
though that fact might be
tion.

4. It is no defense to a cl
court in violating an injun
accused acted in good faith.

5. Defendant, to get ice
side of a street to his ice
side, constructed a chute
river to the street line, ac
level, and to the house on
crossed the street the tops
were about two inches deep,
a level with the street. Th
quite rapidly; 11 loads, each
being hauled every 5 minut
doing the work was a cons
sons passing by on the stre
tute a nuisance.

6. The statute vesting in
pervision, and control of th
ferring power on it to defin
ances, does not authorize th
mission to an individual to
ate such an ice chute across
tutes an obstruction and a
753, requiring cities to caus
kept open and free from nu

7. The construction and
chute across a street for the
ice from a river on one side
icehouse on the other, and w
obstruction of the street and
be justified on the ground
there are other methods of
the street, though such met
pensive.

8. Where an obstruction
an abutting owner to go se
his way to reach the premise
a suit for the removal thereo

Original certiorari procee
to review the action of Ho
judge, in discharging one J.
a charge of contempt in v
injunction issued against
appeal from an order dissol
writ of injunction issued i
above entitled "Young, ap
ma Bros." Reversed.

W. E. Steele and John A.
tiff and appellant Young.
art, for defendant Rothrock
Chadima Bros.

DEEMER, J. On the 23
ber, 1901, there was issued
court of Linn county, Iov
wherein F. M. Young was p
Chadima was defendant, a

¶ 4. See Injunction, vol. 27, Ce

Digitized by Google

ids, more particularly described as an ice chute or tramway, which ran across the street. December 28th of the same year a motion to dissolve the injunction was heard, and it was ordered that the motion be overruled, and that the temporary writ be made perpetual. It was further ordered that defendant be allowed to use the ice chutes until Monday, December 30, 1901, at 12 o'clock noon of said day, and that such use shall not be a violation of said writ; and it was further ordered that at said time, to wit, December 30, 1901, 12 noon, the defendant shall remove said obstruction from said street and sidewalk. On January 12, 1902, plaintiff filed an application charging Chadima with violation of the order. An attachment issued, which was duly served, and thereupon Chadima appeared, and filed a written excuse for his alleged violation of the writ, in which he stated, in substance, that he had made application to the district court of Linn county for a modification of the injunctional order, and asked that the proceedings for contempt be suspended. He also pleaded that he be permitted to proceed with the operation of his ice chute until his motion could be heard. He further pleaded that the proceedings for violation of the injunction were without jurisdiction; that he acted in good faith in operating the chute, under the authority and permission of the city council of the city of Cedar Rapids, and with the least possible obstruction to travel. On January 14, 1903, plaintiff commenced the second action above entitled for an injunction against Chadima Bros., restraining them from operating an ice chute across the aforesaid First street. A temporary writ of injunction was issued on this petition as prayed, and thereafter the defendants filed an answer to the petition, denying the alleged nuisance, pleading municipal authority, and other matters to which we shall hereafter refer; and thereafter a motion to dissolve the temporary writ of injunction issued in the second case as above entitled. The contempt proceedings and the motion to dissolve in the second case seem to have been tried together, resulting in the discharge of J. T. Chadima and the sustaining of the motion to dissolve. The original certiorari proceeding is to review the action of the defendant judge in making the order for discharge, and the appeal in the second case is from the ruling dissolving the temporary writ of injunction issued in that proceeding.

There is no doubt that J. T. Chadima violated the terms of the original writ of injunction issued by the district court of Linn county, and that he should have been punished therefor, unless it be for some matter of excuse presented by him. He says that at the time he violated the writ he had filed a motion to modify the terms of the original particular act is to file a motion to modify the order, and from that hour he may proceed with impunity to violate the terms of the writ. The statement of the proposition is all that is necessary to demonstrate its unsoundness.

Next, he contends that he complied with the injunctional order by changing the method of the construction of the chutes; not that he removed them, but that he so altered their construction as that they did not interfere with public travel on the street. This view overlooks the form of the injunctional order, which restrained defendant from using or operating an ice chute in the street after December 30, 1901, and further directed that the same should be removed from the street and sidewalk. A mere change in the construction of the chute did not amount to a removal, nor did it authorize Chadima to operate it in its changed condition. He was restrained from using or operating the same on the street. The change made in the construction did not entirely obviate the dangers to be apprehended from its use, and there is no doubt that its use, under the circumstances disclosed in evidence, was in violation of the terms of the injunction.

Lastly, it is insisted that the district judge who ordered the original writ gave Chadima verbal permission to make use of the street in the manner he did. All that is claimed in this connection is that the judge said that the use made of the street, if with the permission of the city council, would not be contrary to the terms of the writ. No claim is made that Judge Thompson ever in fact made an order modifying his direction and order for the writ, or that he was even asked to do so, before Chadima proceeded with the use of the ice chute. He was simply asked for a construction of an order which had passed beyond his control, and, as we understand it, said that, if the city council gave Chadima permission to use an ice chute across the street, it would not be a violation of the terms of the injunction. Manifestly this would not be a legal excuse for the violation of the injunction. Such fact might no doubt, be considered in mitigation, but it did not amount to a dissolution or modification of the injunction, and until there was some such order it was the duty of Chadima to obey the commands of the writ. This is fundamental. Langworthy v. McKelvey, 25 Iowa, 55; Lake v. Wolfe, 108 Iowa, 187, 78 N. W. 811. Chadima's good faith is no excuse, but no doubt may be considered in fixing the penalty to be imposed for violation of the writ. Hawkins v. State, 126 Ind. 294, 26 N. E. 43; Cartwright's Case, 114 Mass. 230; Des Moines Co. v. Des Moines Co., 74 Iowa, 585, 38 N. W. 496. The order discharging J. T. Chadima was clearly erroneous, and the proceedings resulting in his discharge will be

Digitized by Google

J. T. Chadima will pay one-half of the costs of this proceeding.

2. As to the second case two questions arise: First, was defendant maintaining a nuisance on the street by the construction and operation of its ice chute? and, second, is plaintiff entitled to have the same enjoined? Defendants have an icehouse on one side of First street, and the river from which they procure their ice is on the other. To get the ice from the river into the icehouse, they constructed a chute which ran from the river to the street line on a steep incline, from the street line across the street on a level, and from the icehouse side of the street to the icehouse on an incline which varied in steepness as the icehouse was filled. As it crossed the street and sidewalk, the bottom of the chute was sunk so that the tops of the sides, which were about two inches deep, were practically on a level with the street and sidewalk. When the time came for filling the icehouse, pulleys and other apparatus were used for taking the cakes of ice from the river, where they were cut, up this chute to the house. Horses furnished the motive power, and the work was quite rapidly done. Ice was taken up as fast as possible. Indeed, one of the witnesses says that 11 loads were hauled every 5 minutes, and that each load averaged 4 cakes each 44 inches long. The ice cakes extended above the street level something like 10 inches, depending, of course, on the thickness of the cakes. It needs no argument to demonstrate that this constituted an obstruction of the street. But, aside from this, the manner of doing the work was a constant menace to persons passing by. The danger from ice which would naturally fall upon the street from the chute and into the chute, and from the cakes themselves which were likely to break loose from the jacks and rush down onto the sidewalk and into the street, rendered the plant a public nuisance. No citation of authorities is needed to support so plain a proposition. But it is said that, as the city authorities gave defendants permission to construct and use the chute in the manner shown, they were guilty of no actionable wrong.

Specific legislative authority to do an act will generally save the perpetrator from the charge of nuisance, although there are some exceptions to this rule, founded on constitutional guaranties, which need not at this time be noticed. But, when legislative authority is relied upon, it must be broad enough to cover the very act complained of. If there be two methods of doing the authorized act, one of which will accomplish the result without creating a nuisance, and another which may injure persons or property, the former method must be pursued, and not the latter. It is not contended that the city was expressly authorized to permit the construction of ice contend that it is found in one or the other of these powers vested in the city, to wit, care, supervision, and control of streets; to make ordinances for the good government and order of the city and the trade and commerce thereof; vesting the fee of the streets in the city; to abate and remove nuisances, and to declare and define what shall be deemed nuisances; or to establish, construct and regulate landing places, wharves, etc., and to use for such purposes the shore and bank of any river—found in the general statutes of the state and in the charter of the city. It is manifest, we think, that no power is here conferred for the establishment of such a nuisance as we have described. Indeed, one of the statutes from which the defendants quote provides that the city shall cause all streets to be kept open and free from nuisances. Code, § 753. While streets and alleys may be devoted to other purposes than public travel, that is the paramount object in maintaining and establishing them, and all other uses must be subordinated thereto. As said in Town of Spencer v. Andrew, 82 Iowa, 16, 47 N. W. 1007, 12 L. R. A. 115, "the city or town must keep them free from obstruction, except where the use or obstruction is such as the city or town is specifically empowered to and has authorized." There are some exceptions to this rule, which are born of necessity, as most exceptions are. Thus an abutting owner may temporarily encroach upon the street by the deposit of building material, may temporarily obstruct the street by loading and unloading goods into his building or upon his property, may plant trees in the parking which do not interfere with public travel, or temporarily interfere with public travel in a variety of ways, without being guilty of nuisance. Callanan v. Gilman, 107 N. Y. 360, 14 N. E. 264, 1 Am. St. Rep. 831; Sikes v. Manchester, 59 Iowa, 65, 12 N. W. 755; Haight v. Keokuk, 4 Iowa, 199. But he cannot cut a ditch or a mill race across it without restoring the way to its former safe and convenient condition. Dygert v. Schenck, 23 Wend. 446, 35 Am. Dec. 575; Venard v. Cross, 8 Kan. 248; Village of West Bend v. Mann, 59 Wis. 69, 17 N. W. 972. The construction of a permanent ice chute across a street is manifestly a nuisance. Such an act is not authorized by the Legislature, nor can it be said to be justifiable on the ground of necessity. It is admitted that there are other methods of getting ice across the street, but it is said that they are expensive, and for that reason this method should not be condemned. There is no merit in this claim.

The only other point involved is the right of plaintiff to enjoin the nuisance. It is said that he has no other interest than that of the general public, and that for that reason he cannot maintain the action. It is admitted, of course, that plaintiff must show he suffers

Digitized by Google

The test is, does plaintiff suffer damage distinct from that of the general public? Park v. R. R. Co., 43 Iowa, 636. If, then, plaintiff has shown that the street which was obstructed led directly to his premises, and that the obstruction interfered with his access thereto, this is a sufficient showing of special damages to authorize him to maintain the suit. There is no difficulty with the rule, although its application is not always easy. Plaintiff has shown that, if deprived of the use of First street, he is compelled to go several blocks out of his way to reach the premises owned by him, which abut on the street, and are in the same block as defendants' icehouse, and that First street gives him the only reasonable access to his property. This is a sufficient basis for his action. Hill v. Hoffman (Tenn. Ch. App.) 58 S. W. 929; Callanan v. Gilman, supra; Dairy v. R. R. Co., 113 Iowa, 719, 84 N. W. 688.

We think the lower court was in error in dissolving the temporary writ of injunction, and its ruling is therefore reversed.

MINITER v. CHICAGO & N. W. RY. CO.

(Supreme Court of Iowa. Oct. 26, 1903.)

MASTER AND SERVANT—INJURIES TO SERVANT—FELLOW SERVANT—PRECAUTIONS AGAINST INJURY—PLATFORMS—ACTS OF FOREMAN.

1. Where plaintiff's intestate was killed, while steadying the bottom of a pile as it was being lifted into place by a steam winch, by the falling of a crowbar used by another workman, *held*, that the negligence, if any, was that of a fellow servant, for which plaintiff could not recover.

2. Where plaintiff's intestate was killed by the falling of a crowbar used in "pinching" a pile in place under the hammer of a pile driver, and there was no proof that any platform which could have been erected would have averted the injury, defendant's failure to provide a platform over deceased, to protect him from falling tools, was not negligence.

3. Where it was not shown that the use of a crowbar in "pinching" a pile into place by an operative of a pile driver, which was the cause of intestate's injury, was done by an order of defendant's assistant foreman, and it appeared that the injury occurred by the act or omission of such operative in handling the bar, which was a proper tool to be used for such purpose, defendant was not liable for the negligence of such foreman in permitting the use of the bar.

Appeal from District Court, Marshall County; Obed Caswell, Judge.

Action at law to recover damages for the death of plaintiff's intestate. The trial court directed a verdict for the defendant, and from the judgment entered thereon the plaintiff appeals. Affirmed.

Boardman, Aldrich & Lawrence, for appellant. Hubbard, Dawley & Wheeler, for appellee.

WEAVER, J. Joseph Miniter was a member of a pile-driving crew in the employ of place along defendant's track. The piles were lifted into a perpendicular position and lowered to the proper place under the hammer by means of a rope passing over a pulley in the top of the derrick to a winch or windlass operated by steam power. At the time of the accident the driver had been stationed upon a bridge or trestle some 20 feet or more above the bottom of a ravine or waterway and a pile had been raised, and was hanging suspended from the rope, with the sharpened point within a few feet of the ground. Miniter was stationed below to guide the point of the pile to the exact spot where it was to be driven; one or more other employés stood upon the driver above, to "pinch" or place the upper end of the pile between the leads or uprights under the hammer; while the foreman or assistant foreman stood at a convenient place to oversee the work and give the necessary orders. While deceased was at his proper place beneath the driver, the pile was lowered with a somewhat sudden movement; and in its descent an iron crowbar, in the hands of an employé at the head of the pile, was in some manner wrenched from his grasp, and, falling, struck deceased upon the head, inflicting a wound from which he soon died. The petition alleges that defendant was negligent (1) in permitting the use of the crowbar upon the driver while Miniter was exposed to danger below; (2) in not furnishing a platform or shield for the protection of the workmen at the lower end of the pile; (3) in not furnishing the deceased with a safe place to work; (4) in not warning said deceased of his danger; and (5) in the order given by the assistant foreman to lower the pile. The defendant denies the claim made by plaintiff; says the work of pile driving was done in the usual and customary manner; and alleges that deceased having full knowledge of the conditions attending such work, and of the machinery and appliances used therein, had remained in defendant's service without protest, and without promise of any change in such machinery or appliances or methods of work, and thereby assumed all risk of injury to which he was thereby exposed.

1. Of these several allegations of negligence, the first and second may be considered as specifications embraced in the general allegation of the third claim, that defendant failed to furnish the deceased a safe place to work. We think there is nothing in the record which would have justified the jury in finding defendant negligent in providing the crowbar for use in "pinching" the pile into position. Indeed, all the witnesses, including the witness Narey, whose testimony is most favorable to plaintiff, concur in speaking of the bar as a proper tool, but some of them do indicate that its use while the pile was in motion was not necessary or

Digitized by Google

below, waiting to receive the pile. * * * The time to use the bar is after the pile is set. * * * All the work done with an iron bar in the usual and ordinary way is after the pile is set and at rest." Condon, a witness for plaintiff, testifies that the work of pinching a pile into place was always done with a crowbar, and that the work was necessary. All the other witnesses testifying in that regard speak of the bar as a tool in general and ordinary use in that kind of work, but the apparent weight of the evidence tends to show that it was not usual or safe to apply it while the pile was in motion. If, therefore, the case made by plaintiff in respect to the crossbar establishes any negligence, it is not of the defendant in furnishing the tool for the use of the crew, but the negligence of the crew, or of some member of it, in using such tool at an improper time or in an improper manner. This, as will be seen, was the negligence of a fellow servant, and affords plaintiff no ground of recovery. Of the failure to provide a platform or scaffold over the deceased to protect him from falling materials or tools, no witness undertakes to say that such protection was practicable. It is obvious that an open shaft or way must of necessity be provided to permit the lowering and management of the pile, and there is nothing in the case before us to indicate that any protection which could reasonably have been furnished by way of a platform would have averted the injury to deceased. These conclusions leave little more to be said of the charge that defendant did not furnish Miniter a safe place to work. That such obligation existed cannot, of course, be disputed; but, aside from the two specifications above considered, we do not understand appellant to insist that the place of work was not reasonably safe.

2. The chief proposition argued and relied upon by the appellant is that Cauley, the assistant foreman, was the vice principal or direct representative of the defendant company, and that deceased received his fatal injury through the negligence of said Cauley in permitting and directing the use of a crowbar in pinching the pile between the leads, and in failing to warn said deceased that such bar was being used by the workmen standing on the driver, over his head. In our view, it is not material or necessary to pass upon the question whether Cauley was in fact a principal. If, for the purposes of this case, we assume appellant's contention to be correct, she has failed to offer any proof tending to establish the alleged negligence. We have already seen that, according to the united testimony of all witnesses speaking to that point, the crowbar was a convenient and proper tool to be used upon the driver in adjusting the pile between the leads; the only open question being whether the act of "pinching" should have been at-

shown to have been done by Cauley's order. It might well be that if Cauley had given the order to lower before Miniter was ready, and the latter was thereby injured, the former could have been held guilty of negligence; but, so far as the record discloses, Miniter was ready and waiting for the movement of the pile. He had clasped the heavy stick near the point, and, by the aid of a cant hook and the pressure of his shoulder, was directing its descent to the proper spot. The injury that ensued to him was not occasioned by any movement of the pile for which he was unprepared, but by the act or omission of Condon, a co-employé, in handling the iron bar. There is no allegation of negligence in failing to properly supervise the work, or in the employment of unskilled or incompetent workmen. The judgment of the district court appears to be correct, and is affirmed.

FAVILLE v. STATE TRUST CO. et al.

(Supreme Court of Iowa. Oct. 26, 1903.)

CONVERSION—EXECUTION—APPEAL—ASSIGNMENTS OF ERROR—INSUFFICIENCY—HARMLESS ERROR.

1. Under Code, § 4136, providing that assignments of error must specifically indicate the error complained of, where a motion for a more specific statement was based on several grounds, and was sustained in part and overruled in part, an assignment that the court erred in overruling the first, second, third, and fifth assignments of the motion was insufficient.

2. Where a motion to dismiss and for judgment at the close of plaintiff's case was based on two distinct grounds, an assignment that the court erred in not sustaining such motion for a dismissal and for judgment against plaintiff, which motion was made at the close of plaintiff's testimony, was insufficient.

3. In an action for conversion of personal property sold on execution, evidence of a witness as to the results of an examination made by him regarding the regularity of the writ was properly excluded as secondary.

4. The evidence was also objectionable as a conclusion of the witness.

5. Where an action for conversion of property sold under an execution was based on the theory that the judgment was void, and no claim was made that there was any irregularity in the sale or proceedings under the writ, error in refusing to permit the officer to amend his return on the execution was harmless.

Appeal from District Court, Buena Vista County; A. D. Baillie, Judge.

Action for the conversion of certain personal property. Trial to the court. Judgment for plaintiff, and defendants appeal Affirmed.

Wambach & Jordan, for appellants. J. A. Tracy and F. F. Faville, for appellee.

PER CURIAM. The assignments of error read as follows:

"(1) The court erred in overruling the first, second, and third and fifth assignments of defendants' motion for a more specific s'

Digitized by Google

fendants' motion for dismissal of the case and for judgment against the plaintiff, which motion was made at the close of the plaintiff's testimony.

"(3) The court erred in holding that the evidence offered by plaintiff was sufficient to entitle him to recover.

"(4) The court erred in excluding the testimony of Geo. Wambach.

"(5) The court erred in denying defendants' motion for leave to amend the officer's return on the execution.

"(6) The court erred in holding the defendant jointly liable. .

"(7) The court erred in holding that the plaintiff is entitled to recover in this action.

"(8) The court erred in its findings that the issues in said cause are with the plaintiff, and that the plaintiff was authorized and empowered to prosecute said suit.

"(9) The court erred in finding for the plaintiff. .

"(10) The court erred in not sustaining the separate motions for judgment of the defendants.

"(11) The court erred in holding that there was no misjoinder of parties defendants.

"(12) The court erred in rendering judgment against defendant C. J. Parker.

"(13) The court erred in rendering judgment against defendant E. L. O'Banion.

"(14) The court erred in rendering judgment against defendant the State Trust Co.

"(15) The court erred in rendering joint judgment against all the defendants.

"(16) The court erred in not sustaining defendants' motion to dismiss."

The motion referred to in the first paragraph was based on several grounds, and was sustained in part and overruled in part. The assignment is omnibus in character, and clearly insufficient. Code, § 4136, and cases cited.

The motion referred to in the second paragraph was also based on at least two distinct grounds, and this assignment is also insufficient.

All the other assignments, unless perhaps it be the fourth and fifth, are clearly insufficient under our prior holdings. Tomblin v. Ball, 46 Iowa, 190; Klotz v. James, 96 Iowa, 1, 64 N. W. 648, 59 Am. St. Rep. 348; Duncombe v. Powers, 75 Iowa, 185, 39 N. W. 261; Hoefer v. Burlington, 59 Iowa, 281, 13 N. W. 294; Armstrong v. Killen, 70 Iowa, 51, 30 N. W. 14; Creager v. Johnson, 114 Iowa, 249, 88 N. W. 275; Brewster v. R. R. Co., 114 Iowa, 144, 86 N. W. 221, 89 Am. St. Rep. 348.

2. There was no error in striking out the testimony of Wambach. It referred to the results of an examination made by him regarding the regularity of a writ of execution under which the defendants are said to have acted, and was clearly secondary, and evidently the conclusion of the witness.

denying the motion, but the error was without prejudice. Plaintiff's action was bottomed on the theory that the execution was issued on a void judgment, and that the writ was no protection. It was admitted that the property had been sold thereunder, but no claim was made in the petition that there was any irregularity in the sale, or in the proceedings under the writ. As no possible prejudice resulted, we are not disposed to interfere with the ruling.

These are the only matters which may be considered, and, finding no prejudicial error, the judgment is affirmed.

BEVERING et al. v. SMITH.

(Supreme Court of Iowa. Oct. 29, 1903.)

ACTIONS FOR RECOVERY OF REAL PROPERTY —NEW TRIAL — STATUTORY PROVISIONS — TIME OF APPLICATION—WHEN TIME BEGINS TO RUN—DISCRETION OF COURT.

1. The period within which application may be made for a new trial under Code, § 4205, providing that in actions for the recovery of real property the court, in its discretion, may grant a new trial on the application of any party thereto, "made at any time within one year after the former trial," begins to run at the termination of the trial; and the trial does not end with the return of the verdict, where the clerk does not enter judgment forthwith, as authorized by section 3777, but ends on the court's final decision on the motions for judgment on the verdict and in arrest of judgment, and the entry of judgment thereon; a trial being defined by section 3649 as the judicial examination of the issues of an action, whether of law or of fact.

2. Code, § 3777, providing that, when a trial by jury has been had, judgment must be entered in conformity with the verdict, unless it is special, or the court orders the case to be reserved for future argument, is directory, merely; and judgment need not be entered until the motions for new trial and in arrest of judgment have been disposed of.

3. Code, § 3755, authorizing the court to grant a new trial for enumerated causes affecting the substantial rights of the party applying therefor, and section 4205, authorizing the court, in its discretion, to grant a new trial in actions for the recovery of real property on the application of a party made at any time within one year after the former trial, though the grounds required for a new trial in other cases are not shown, provide for distinct and different proceedings; and therefore the denial of a motion for a new trial filed under the former section is no bar to an application for a new trial under the latter section.

4. The affirmance of a judgment of the district court by the Supreme Court merely because appellant failed to properly present his case to the Supreme Court being, in its practical result, in effect, a dismissal of the appeal, is no bar to the granting of a new trial under Code, § 4205, authorizing the granting of new trials in actions for the recovery of real property.

5. Where, in an action for the recovery of real property, it was shown that each landowner or his grantor had occupied the land up to a marked division line for 40 years, the denial of a motion for a new trial under Code, § 4205, authorizing the court, in its discretion, to grant new trials in actions for the recovery of real property, after a verdict awarding plaintiff a

Digitized by Google

ip of land beyond the division line, was er-
oneous and an abuse of the court's discretion.
Deemer and Sherwin, JJ., dissenting.

Appeal from District Court, Lee County; I. Bank, Judge.

The plaintiffs own lot 12 in block 163 in the city of Keokuk, and defendant lot 11 adoining, in the same block. The petition, filed une 14, 1897, alleged that defendant was, nd had been for some time, in the wrongul possession of a strip 3 feet wide and 40 feet long, along the west side of lot 12, nd prayed that she be ejected and for damges. The answer put plaintiffs on their roof, and averred that defendant's lot was nclosed by buildings and fence, and had been for 40 years, and, as so inclosed, was claimed by her because of adverse possession, nd plaintiffs' acquiescence therein. A trial was had, and a verdict returned for plaintiffs June 8, 1899. Motion for new trial and in arrest of judgment were overruled, and judgment entered November 4, 1899. An appeal was taken to this court February 19, 1900, and judgment affirmed, on motion, in October term of the same year. On October 29, 1900, the defendant filed her application for new trial, which, on hearing, was dismissed, and she appeals. Reversed.

See 90 N. W. 840.

J. F. Smith, for appellant. R. M. Marshall and W. J. Roberts, for appellees.

LADD, J. Section 4205 of the Code, found in the chapter relating to the recovery of real property, reads: "In cases provided for in this chapter the court, in its discretion, may grant a new trial on the application of any party thereto, or those claiming under a party, made at any time within one year after the former trial, although the grounds required for a new trial in other cases are not shown." The period within which application may be made evidently begins from the termination of the trial. Appellee insists that ended with the return of the verdict. If, so, the application was filed too late. The Code defines a trial as "the judicial examination of the issues of an action, whether they be issues of law or of fact." Section 3649. To the trial of the action in this sense the statute refers, and it is not completed until all the issues raised are passed on. The return of the verdict does not conclude the examination of questions of fact, even, for it, upon motion, is subject to review by the court until finally approved or set aside. So, too, issues of law are matters of inquiry, and rulings thereon open to modification and change at any time before final judgment. The finding of the jury or a ruling of the court is a step in the investigation, but, so long as these are open to review in the same court, it cannot be said that trial, as defined by statute, has terminated. Possibly the judgment is not, technically speaking, a part of the trial; but it definitely marks the conclusion of the examination of the issues, and speaks the result. A new trial, defined by section 3755 of the Code as "a re-examination of the issue of fact or some part or portion thereof, differs from the examination of all the issues involved in an action. And a mere trial of fact or of law is included within the latter. In the instant case, hearing of the motions for judgment, for new trial, and in arrest of judgment was a continuance of the examination of the issues raised. When was it ended? Manifestly, at the time inquiry into the rights of the parties ceased, and that was not until the court's final decision. As contended by appellee, only issues raised by the pleadings are intended. Others are merely incidental to these. It is further urged that as section 3777 of the Code authorizes the clerk to enter judgment forthwith upon the return of a verdict, unless otherwise directed, the case should be treated as though that had been done. This provision is directory, merely, and the practice prevails in many parts of the state of not entering judgment until motions for new trial and in arrest of judgment have been disposed of. As to whether, when judgment is entered immediately, the period of this statute begins to run from that time, or from the ruling on motion for new trial and in arrest, we are not now concerned. This application was filed within a year from the rulings on the motions and the entry of judgment, and therefore, in any event, in apt time. Hill v. State, 41 Tex. 253; 21 Ency. P. & P. 957. See Butterfield v. Walsh, 25 Iowa, 263.

2. Appellee insists that as an application for new trial filed two days after verdict, under section 3755 of the Code, was denied, another may not be heard under section 4205. But the two statutes provide for distinct and different proceedings. In the former the application must be filed within three days after verdict; in the latter, within one year after trial. In the former, causes therefor are specified; in the latter the grounds need not be those required for new trial in other cases. The application may be ex parte, and notice to the adverse party is not essential. Buena Vista Co. v. Iowa Falls & S. C. R. Co., 55 Iowa, 157, 7 N. W. 474. The latter statute applies alone to actions for the recovery of real property, and is to be liberally construed, to the end that its object may be attained. At common law the verdict and judgment in an ejectment case was not conclusive between the parties, as in other sections, and either party might maintain as many new suits as desired, unless restrained by a court of equity through a proceeding in the nature of a bill of peace. This was so for the reason that plaintiff was only a fictitious person, and as the demise, term, etc., could be laid in many different ways, it could not, from the structure of the record, be made to appear that the second suit was brought between the same parties and upon the same title as the

Digitized by Google

first. Perhaps, also, there was an unwillingness, because of a peculiar regard, under the feudal system, attached to the tenure by which real estate was held, that the question of title should be settled in one action. Spence v. McGowan, 53 Tex. 30. As a new suit might be brought, new trials were uniformly denied in the earlier cases. Later, owing to possible injury from a change of possession of the defeated party, this rule was changed, and new trials awarded as freely in ejectment as in other actions. But the fictions of the common law have been abolished, and procedure for actions of right prescribed by statute. In many of the states a second trial is awarded as a matter of right. In others, like ours, the propriety of a second trial is left to the discretion of the court. But greater latitude is allowed to judicial discretion than in ordinary actions, and new trials may be ordered for reasons which seem insufficient in others. Newell v. Sanford, 10 Iowa, 364; White v. Poorman, 24 Iowa, 108. Newell, in his work on Ejectment (page 819), says that "the application is sometimes considered as an appeal to the equitable discretion of the court to prevent palpable and material wrong." The title to realty, however, still seems to be considered too important, not to say sacred, to permit of final adjustment without a more ample opportunity for investigation than is afforded in passing on that to personal property; and, while a new trial ought not to be granted where ample justice has already been done, an erroneous result should appeal most strongly to the court for correction.

3. The affirmance by the court on motion ought not to be treated as an insurmountable obstacle to the granting of a new trial. It was entered pro forma because of appellant's failure to file the printed abstract of record within the period fixed by statute. As errors were not assigned, and the jurisdiction of this court in a law action is limited to the consideration of such errors only, there is no ground for saying that the order of affirmance operated as an approval of every ruling made in the course of the trial. To do so would be indulging in a mere fiction, having no foundation in fact. The merits were not considered. A new judgment was not entered. That of the district court was merely confirmed because of the omission to properly present the record. In a case like this an affirmance differs little, in effect, from a dismissal, in its practical result on the cause of action. True, the right to a second appeal, which would possibly have been retained on dismissal, could not be exercised. The real effect, however, was to leave the judgment of the district court precisely as though no appeal had been taken. Had errors been assigned, and these reviewed by this court, its opinion as to such errors would doubtless have been final. But the statute authorizes a new trial "although the grounds required for a new trial in other cases are not shown"—ground which could not have been reviewed on appeal. The facts constituting such grounds may have arisen or been discovered subsequent to the judgment, and the period of one year is allowed from trial unconditionally, and regardless of whether an appeal has been taken or not. In states where a second trial in ejectment cases is awarded as a matter of right, an appeal from the judgment in the first trial is held not to suspend or waive such right. Gibson v. Manly, 15 Ill. 140; Indiana, B. & W. R. Co. v. McBroom, 103 Ind. 310, 2 N. E. 760; Haseltine v. Simpson (Wis.) 21 N. W. 290. In Com. v. McElhaney, 111 Mass. 439, under a statute authorizing the nisi prius court, within a year after the trial, on the application of defendant, to grant a new trial, when it shall appear that justice has not been done, the court declared that a new trial ought to be granted in a capital case after sentence of death passed, and exceptions had been overruled by the Supreme Court. In State v. Circuit Court (Wis.) 38 N. W. 192, the Supreme Court of Wisconsin, under a similar statute, reached the same conclusion in a case where a town had been fined for not repairing a bridge, though Orton, J., filed a dissenting opinion, in which he insisted upon the finality of an order of affirmance; and this apparently influenced the court in Ean v. Chicago, M. & St. P. R. Co. (Wis.) 76 N. W. 329. In that state a judgment upon affirmance by operation of law becomes a judgment of the Supreme Court, and the thought of the last decision seems to be that as the statute permitting application for new trial on grounds mentioned within one year relate to judgments, distinctively, of the court in which such application may be made, it cannot be entertained after such affirmance. In this state the appeal alone does not affect the judgment of the lower court. Watson v. Richardson, 110 Iowa, 696, 80 N. W. 416, 80 Am. St. Rep. 331. There is no doubt but that an affirmance ought to be treated as a finality of all questions before the court, and probably the Legislature is without power to make it otherwise. But there appears no tenable ground for denying the legislative power to provide for a hearing, even subsequent to an affirmance, of matters having a legitimate bearing on the controversy, which, owing to adequate reasons, have not been presented. The ground for new trial is quite as likely to be discovered after as before the appeal; and where the affirmance of the appellate court adds nothing to the existing judgment, except by way of confirmation of the action of the trial court, there is no reason for regarding a judgment affirmed as any more sacred than one not appealed from after the period within which an appeal may be taken has expired. In either event it is no more nor less potential than a judgment of the district court. One is final in the same sense that the other is. Under the practice in Michigan

Digitized by Google

iewed without passing on the merits, a new rial may be granted by the trial court after n affirmance. Reynolds v. Newaygo Circuit (Mich.) 67 N. W. 529. Under section 4094 of the Code, a petition to vacate or modify a judgment, based on grounds enumerated in section 4091, may be filed within one year after final judgment; and in Gray v. Coan, 48 Iowa, 424, the court seemed to be of the opinion, in construing a statute materially different, that an appeal would operate as a waiver of such right. This was upon the ground that an appeal admitted the finality of the judgment, and hence waived the right to prosecute proceedings for a new trial. Under the present statute the application is permissible only after the entry of final judgment or order. But in Cook v. Smith, 58 Iowa, 607, 12 N. W. 617, the petition was filed before the appeal was taken, and it was held that such appeal did not operate to oust the court of "jurisdiction of the application during the time limited in the statute." And in Sullivan v. Chicago, R. I. & P. R. Co. (Iowa) 93 N. W. 367, the appeal from final judgment was consolidated with that denying new trial; the former being affirmed and the latter reversed in the same opinion. Returning to the statute under consideration, it is to be observed that the only limitation prescribed is that of time. Had it been the purpose of the Legislature to restrict the application to cases in which no appeal had been taken from the judgment entered on the first trial, this would doubtless have been mentioned. As previously remarked, the trial court will not be permitted to review the action of this court, either on errors considered or the merits, when passed upon, for to this extent its determination is final. But, aside from these, we see no impropriety in an inquiry and the awarding of a second trial, on good cause shown, if thereby justice will be promoted. Indeed, the manifest purpose of the statute is to safeguard the investigation of titles to property of a permanent and enduring character, often doubly valuable because of the memories and traditions clinging about it, and to avoid, as far as practicable, any miscarriage of justice through error, oversight, mistake, misfortune, or other circumstance, though not legal ground for new trial in other actions, and though a re-examination of the issues, whenever a different result is reasonably probable and apparently just, will fully vindicate the right, and more certainly establish title in the true owner.

4. The abstract of the pleadings and evidence on the original hearing is made a part of the application for new trial. From these the precise issues upon which the first trial proceeded appear. The defendant claimed to be the owner of the strip of land in controversy, and it is distinctly averred in the application for new trial that the evidence con- it, and so recognized for nearly 40 years. Either the twenty-fourth or twenty-eighth assignment of error raised the point that the evidence conclusively established this defense. The point was well taken. The engineers made use of the data from the records, the character of which does not appear. No account was taken of monuments, if any there were, nor of the fact that each lot owner or his grantor had occupied and improved up to a marked division line for 40 years. No effort was made to ascertain the original corners or the lines of the original survey. On what theory it was assumed that the block was originally divided into lots of equal size, does not appear. Proceeding on this assumption, it was found that plaintiff's lot lacked 3¼ feet of the average, and the conclusion reached that defendant must be in possession of it. Surveyors should pay more attention to history than invention. They are to ascertain the location of original lines, rather than instruct where these ought to have been. It is doubtful whether the testimony, standing alone, was sufficient to indicate the boundary line between these lots. But whether this be so or not, decisions of this court since the trial are to the effect that a boundary line, up to which each party has occupied his lot for more than 10 years, marked by buildings and division fence, cannot be questioned. Miller v. Mills Co. (Iowa) 82 N. W. 1038; Klinkner v. Schmidt (Iowa) 87 N. W. 669; O'Callaghan v. Whisenand (Iowa) 93 N. W. 579. On this ground the application for new trial should have been granted, and, as the evidence is conclusive, the denial was an abuse of the court's discretion.

Reversed.

DEEMER, J. (dissenting). I am unable to agree either to the conclusion or to the reasoning of the majority in this case, and I especially dissent from the views expressed in the third division of the opinion.

Reduced to its last analysis, the question is, how many trials may a defeated party have in this court? May he take advantage of a statute relating to new trials in the district court, and have an opinion of this court superseded and overruled, and the case again reheard, after one petition for rehearing has been submitted and overruled? This application is based upon the same alleged errors committed by the trial court as on the original trial from which the former appeal was taken. Indeed, the abstract on that appeal was attached to, and made a part of, the application in this case. The petition in this case presents no new facts or propositions of law. It is conceded that the basis of this proceeding is the alleged errors of the court committed on the original trial, from which an appeal was taken, which resulted in an affirmance in this court.

Digitized by Google

and to ask that court to reverse this court because of error committed on the original trial. This the trial court refused to do, and, as I think, properly. But the majority say that, notwithstanding we have once affirmed the judgment and overruled a petition for a rehearing, nevertheless in actions of this kind there may be a second rehearing on the same record, because, forsooth, the case was affirmed pro forma, and no judgment has been entered here. I had always supposed that a judgment of affirmance here was a finality, no matter what the grounds of the decision. If this tribunal is not a court of last resort, then I have misinterpreted the Constitution. In Gray v. Coan, referred to by the majority, it is said: "This court is required by law to pronounce the final judgment in the case. If this were not so, a party could, after a case was affirmed by this court, have a new trial granted below, which would be an unheard-of proceeding." I do not exactly understand what is meant by a "pro forma affirmance." A case is either affirmed, reversed, or dismissed by this court. If affirmed, no matter on what ground, the judgment is a finality, and is res adjudicata, not only of every question presented, but of every one which might have been urged. This is fundamental. See 3 Cyc. pp. 494, 495, and cases cited; Miller v. Bernecker, 46 Mo. 194; Finch v. Hollinger, 46 Iowa, 216; Adams Co. v. B. & M. R. R., 55 Iowa, 94, 2 N. W. 1054, 7 N. W. 471; State v. Long (Iowa) 84 N. W. 677. Herein, as I view it, is the fundamental difficulty with the majority opinion. A judgment of affirmance for the reason that proper steps were not taken to secure a hearing on the merits is conclusive as a former adjudication, and may be pleaded as such, although the decision of this court, if the case could have been heard upon the merits, would have been different. Trescott v. Barnes, 51 Iowa, 409, 1 N. W. 660. When the judgment of a trial court is affirmed, this court may send the case to the court below to have the same carried into effect, or it may issue the necessary process for this purpose, as the party may require. Code, § 4143. And execution may issue from this court. Code, § 4153. From this it follows that a judgment of affirmance is something more than a mere form. An affirmance may be ordered without prejudice to appellant. White v. Poorman, 24 Iowa, 108. But in the absence of such an order the affirmance is conclusive, and it, in effect, becomes the final judgment in the case. Where a case is affirmed, a mandate or procedendo, as it is called under our procedure, must issue to reinvest the trial court with jurisdiction. Messenger v. Marsh, 6 Iowa, 491; 3 Cyc. p. 478, and cases cited. From the earliest history of this court it has been the practice to issue procedendoes

the trial court loses jurisdiction. Schmidt v. Rosenberg, 111 Iowa, 369, 82 N. W. 768, and cases cited. The appeal operates to give this court jurisdiction until the final word is spoken, and when spoken there is no power either in the Legislature or in an inferior tribunal to annul or in any manner impair the final conclusion. A judgment of affirmance on motion is just as sacred and as much res adjudicata as if on the merits. I think the majority fail to distinguish the doctrine of stare decisis from that of res adjudicata. When a case is once adjudicated by the highest tribunal in the state, that should be the end of it, no matter what the reasons for the decision. The reasons given for a particular conclusion only become important when considering the question of stare decisis. The majority, as I understand it, admit that, had we passed upon the questions presented by the first appeal, that would have ended the matter. If that be true, the same result should follow an affirmance on motion, under the doctrine of Trescott v. Barnes and Finch v. Hollinger, supra. My views are so fully expressed by Orton, J., in his dissenting opinion in State v. Cir. Court (Wis.) 38 N. W. 192, which was afterwards concurred in by the entire bench in Ean v. C., M. & St. P. R. R. (Wis.) 76 N. W. 329, that I need not do more than refer to that learned exposition of the law, and to the cases therein cited. As illustrating the doctrine prevailing in Illinois, see Hawley v. Simmons, 102 Ill. 115; Smyth v. Neff, 17 N. E. 702. In the case from Indiana cited by the majority, Judge Elliott dissented. The Wisconsin case in 21 N. W. 299 is based on a statute expressly authorizing new trials after appeals. See section 3029 of the Revised Statutes of that state. The rule in Wisconsin is well stated in the Ean Case, 76 N. W. 329, and, for a full collation of authorities, see dissenting opinion of Orton, J., heretofore cited. The section of the statute relied upon by the majority has reference, as I view it, to new trials in the district court, and not to rehearings in this court. The consequences to be feared from the holding of the majority are so clearly pointed out in the opinion of Orton, J., and the reasons for adopting a contrary rule so apparent, that I am impelled to dissent from the conclusions reached. The dangers to be apprehended are also pointed out by Sedgwick & Wait on Trial of Title to Land, §§ 608, 609. Even in the old action of ejectment, the doctrine of res adjudicata applied when the parties were identical. Newell on Ejectment, pp. 809, 810. The majority, in my opinion, overlook or underestimate the effect of a judgment of affirmance by this court, and leave the door open for second appeals and diverse holdings in every case involving title to lands.

For these reasons, I respectfully dissent

Digitized by Google

STATE v. HASTY.

(Supreme Court of Iowa. Oct. 23, 1903.)

ADULTERY—DEFINITION—UNMARRIED PERSON—COMMON LAW—INDICTMENT—NAMES OF WITNESSES—CONTINUANCE—ABSENT WITNESSES—CUMULATIVE TESTIMONY—TRIAL—ELECTION OF ACT RELIED ON—NOTICE—SERVICE ON ATTORNEY—EVIDENCE—PHOTOGRAPHS—LETTERS—BIRTH OF CHILD—ARGUMENT OF COUNSEL—COMMENTS—FAILURE TO TESTIFY.

1. A married man having sexual intercourse with an unmarried woman is guilty of adultery at common law, and under Code 1897, § 4932, providing that when the crime is committed between parties only one of whom is married both shall be punished, though such section omits the clause "both are guilty," used in the Code of 1873.

2. Code, § 5276 et seq., requiring the motion to set aside the indictment to be sustained when the names of all the witnesses examined before the grand jury are not indorsed thereon, and the minutes of the evidence of the witnesses examined are not returned therein, includes names of witnesses whose testimony was taken down in shorthand and subsequently extended and filed by the committing magistrate.

3. The defendant cannot complain under Code, § 5276 et seq., of the omission of evidence having no bearing on the trial against him, or of the names of those giving such evidence, from the indictment.

4. On motion for continuance, proof of the sickness of the husband of a witness did not establish her inability to attend, where, for all that appeared, another might have cared for him.

5. On prosecution for adultery, the wife of the accused testified that she had detected him in the act. A continuance was asked to procure attendance of witnesses who would testify that the wife had made statements contradictory to her testimony. One witness present so testified. *Held*, that as the evidence was cumulative and the record left no reasonable doubt of defendant's guilt, refusal of the continuance was not an abuse of discretion.

6. Where, on prosecution for adultery, the only direct evidence of the crime was the testimony of one witness that she had once detected the defendant in the act, at a time within the statute of limitations, it was not error to refuse to require the state to elect the transaction relied on.

7. Under Code, § 5373, as amended by Acts 28th Gen. Assem. p. 95, c. 135, requiring that notice that witnesses who testified before the committing magistrate would be called should be served on defendant "or his attorney of record if the defendant be not found within the county," service of notice can be made on the attorney for the accused where he could not be found after diligent search, and it was not necessary, to authorize such service, that accused was without the county.

8. On prosecution for adultery, a photograph proven to be of defendant's alleged paramour was admissible to identify her as the woman with whom defendant had lived while residing in another state, though the photograph was taken several years before the time of such residence.

9. In attempting to prove that defendant had lived in adultery with a certain woman in a certain locality, the father of the woman testified that he had received two letters from persons residing in said locality, and that subsequently he read them to defendant, who admitted the child born to them. *Held*, that they were admissible in connection with the father's testimony.

10. Where letters contained statements constituting competent evidence, and also contained statements of opinion by the writer, it was not error to admit them over an objection to the letters as entire.

11. That defendant's alleged paramour gave birth to a child outside of the county where he was prosecuted for adultery might be considered by the jury in determining whether the crime was committed within the county, in view of the testimony by one witness that she had detected them in the act in the county about nine months previous, and evidence tending to show that defendant had recognized the child as his own.

12. A statement by attorney for the state that the testimony of an alleged eyewitness of the crime was uncontradicted was not a comment on failure of accused to testify in his own behalf, contrary to Code, § 5484, though defendant was the only person who was in a position to contradict such testimony.

13. Where it was in dispute whether or not the county attorney had made statements commenting on defendant's failure to testify in his own behalf, the court on appeal will adopt the finding of the trial court.

14. Pending the trial, a juror was asked by an entire stranger if he was aware that he was a fourth or fifth cousin of the wife of the accused, and responded that if he was it would make no difference. He had never seen the wife of the accused before the trial, and, if they were related, neither was aware of the fact. *Held*, that no misconduct was shown.

Appeal from District Court, Keokuk County; A. R. Dewey, Judge.

The defendant was convicted of having committed adultery, and appeals. Affirmed.

Brown & Brown, Stockman & Hamilton, and B. W. Preston, for appellant. Chas. W. Mullan, Atty. Gen., and Chas. A. Van Vleck, Asst. Atty. Gen., for the State.

LADD, J. The victim of defendant's lust was an unmarried woman, and counsel's first contention is that owing to this fact he was not guilty of the crime of adultery. The statute, as it stood in Code 1873, read: "Every person who commits the crime of adultery, shall be punished by imprisonment in the penitentiary not more than three years, or by fine not exceeding $300 and imprisonment in the county jail not exceeding one year; and when the crime is committed between parties only one of whom is married, both are guilty of adultery and shall be punished accordingly. No prosecution for adultery can be commenced but on the complaint of the husband or wife." Section 4008, Code 1873. The words "both are guilty of adultery and" were omitted from the Code of 1897. Adultery at the common law was not denounced as a crime. As the basis of a civil right of action it consisted only of a man having sexual intercourse with a married woman other than his wife, thereby introducing the danger of spurious issue of the marriage. Connection with a single woman, though fornication, was not adultery. The same rule seems to have obtained under the

Digitized by Google

marriage relation, regardless of whether the offender were male or female. And the definition of the canonical law, according to Wharton, was accepted by every Christian state at the time of the colonization of America, and "is no doubt a part of the common law brought with them by the colonists of all Christian nationalities." 2 Wharton on Crim. Law, § 1719. It has been generally so defined in statutes authorizing divorce because of adultery. 1 Bishop on Marriage and Divorce, § 703. Picket v. Picket, 27 Minn. 299, 7 N. W. 144; Commonwealth v. Call, 21 Pick. 509, 32 Am. Dec. 284; Mosser v. Mosser, 29 Ala. 313. The decree is granted owing to the fault of the offending party in the violation of the marriage contract, and sexual intercourse by a husband with an unmarried woman is quite as much a violation of the contract and the marital rights of the wife as it would be if committed with a married woman. See Aitchison v. Aitchison, 99 Iowa, 94, 68 N. W. 573. It is also to be observed that the word "adultery" in its ordinary use has precisely the meaning accorded to it by the ecclesiastical courts. The statutory offense is regarded as primarily against the family, and only incidentally in its consequence to the public. State v. Roth, 17 Iowa, 336. And it would seem necessarily to follow that the status of the particeps criminis in that view would be of no importance. Moreover, the statute as it formerly stood denounced the offense as it was defined by the canonical law. And the elimination of the words "both are guilty of adultery" ought not to be construed to change its meaning, for the clause "both shall be punished" is retained. For what punished? Manifestly the crime forming the subject of the section. The statute proceeds on the theory that adultery consists in the sexual connection between a man and a woman, of whom one is lawfully married to a third person, and directs punishment accordingly. Were it not for the requirement that both be punished when one is unmarried, the latter might escape under the last clause prohibiting prosecution save on complaint of the spouse.

2. It appears that the evidence of certain witnesses was by agreement taken down in shorthand, subsequently extended and filed by the committing magistrate with the papers in the clerk's office. This evidence was considered by the grand jury, and the indictment based in part thereon. The names of such witnesses were not indorsed on the back of the indictment, nor were minutes of their evidence attached thereto. On these grounds defendant moved that the indictment be set aside. Section 5276 of the Code requires that upon the finding of an indictment "the names of all witnesses on whose evidence it is found must be indorsed thereon." Unless this is done, or proper notice given, such witnesses may not be called, as section 5373 of the Code prohibits the county attorney from introducing "any witness who was not examined before a committing magistrate or the grand jury, and the minutes of whose testimony were not presented with the indictment," without the service of the notice prescribed. These sections contemplate the indorsement on the back of the indictment of the names of all witnesses upon whose testimony the finding of the grand jury is based. No distinction whatever is drawn between those actually before the grand jury and those the minutes of whose testimony only is examined. The motion to set aside the indictment is to be sustained "when the names of all the witnesses examined before the grand jury are not endorsed thereon; when the minutes of the evidence of the witnesses examined before the grand jury are not returned therein." Were the witnesses the minutes of whose testimony only were before the grand jury "examined" within the meaning of the statute? We think so. The grand jury necessarily passed upon their credibility as though present. In this sense they were examined by that body. The intention of the lawmakers, as gathered from the several sections of the Code from which we have quoted, seems to have been that the names of the witnesses upon whose testimony the indictment is based, and the nature of their evidence, should be made known to the accused in advance of the trial. This is obvious from the provision of the next section, that the motion to set aside shall not be sustained if the indorsement of names is corrected and the omitted minutes of evidence are attached under the supervision of the court. Section 5320, Code. Of course, it must appear that the evidence given was material, and the state rightly insists that there was no showing of the materiality of the evidence of the witnesses whose names did not appear on the back of the indictment. This was essential. State v. Little, 42 Iowa, 52; State v. Lewis, 96 Iowa, 291, 65 N. W. 295. The defendant cannot complain of the omission of evidence having no bearing on the trial against him, or of the names of those giving such evidence, from the indictment; and, before the motion to set aside will be sustained, the materiality of the evidence given by the witnesses whose names have been omitted must affirmatively appear.

3. The minutes of the evidence attached to the indictment indicated that Mrs. Hasty would testify to having seen defendant engaged in sexual intercourse with Olive White in a barn on his farm within the time fixed by the statute of limitations. She did in fact so testify on the trial; and hers was

Digitized by Google

who would testify that on several occasions she had stated out of court, in substance, "that she could not swear she had seen them [defendant and Olive] do anything wrong, but she saw a transaction in the barn that looked suspicious," was overruled. The affidavit shows affirmatively due diligence as to three of the witnesses, and that they would likely recover from sickness in time to attend the next term of court. Proof of the sickness of John Bowen did not establish the inability of Mrs. Bowen to attend the trial as a witness, as, for all that appears, another might have cared for him during her absence. The above statement is said to have been first made in presence of these persons and Mr. and Mrs. Ollis, the last of whom, as well as Bowen, were unable to be present at the trial. But it affirmatively appeared that Mrs. Bowen and Ollis were competent witnesses to the statement, and the latter did in fact testify fully thereto. The motion also indicated that at another time substantially the same statement was made in presence of Mr. and Mrs. King, and that the latter would be unable to be present at the trial. But King testified thereto as asserted his wife would. It thus appears that the proposed evidence was both cumulative and impeaching in character, and the motion so indicated. That the evidence of witnesses because of whose absence a continuance is asked would be merely cumulative is generally regarded as a valid objection to the application. People v. Jenkins, 56 Cal. 4; Clement v. Newton, 78 Ill. 427; Wilkerson v. Commonwealth, 88 Ky. 29, 9 S. W. 836; State v. Rodrigues, 45 La. Ann. 1040, 13 South. 802; Dillingham v. Ellis, 86 Tex. 447, 25 S. W. 618; Corbin v. People, 131 Ill. 615, 23 N. E. 613. This is the ground of the statutory requirement that the affidavit must set forth that affiant knows of no other witness by whom the alleged facts may be fully proven. But notwithstanding that the evidence to procure which a continuance is sought may be cumulative, it may happen that the interests of justice, which are made by the statute of controlling importance, will be promoted by a postponement for its production. Thus, when the direct evidence of a transaction under investigation is in conflict, the issue is often determined by the number of witnesses, and in such a case the objection that the evidence is cumulative probably ought not to prevail. Dillingham v. Ellis, supra; Corbin v. People, supra In the last case the court said: "The objection that the evidence of the absent witnesses would have been merely cumulative can have no force in a case where it is shown there is irreconcilable conflict in the testimony. The greater number of witnesses testifying on the one side or the other may, and often does, prove decisive of the case." But merely impeaching testimony does not

such an issue. Moreove
court on application for
ble a party to procure i
is generally regarded as
(State v. Rorabacher, 19
ordinarily be denied whe
bad character only is
Johnson, 47 La. Ann. 1
Hamilton v. State, 3 I
State, 58 Miss. 867; Mur
490). Appellate courts
fered when the impeachi
evidence of contradicto
Lundy v. State, 44 Miss.
cited that the absent wi
that a witness called by
out of court that if he
the accused by telling th
it otherwise. In State
Ann. 1001, 10 South. 198,
prove that the prosecutir
he was mad when he beg
would compromise the s
appear to prosecute. Ir
117 Mo. 307, 339, 23 S.
witness would have testi
by the state, who identifi
place of the crime, had
that he did not know
case, and was unable to
son seen was the accuse
cases the denial of the
tinuance was approved.
was declared error in F
373, to overrule an appl
ance based on the absenc
would testify that a w
evidence the state relied
said "that, if hard swear
defendant to the penitent
In none of these author
other evidence of the s
fered on the trial, as i
But the defense may so
upon breaking down the
state's witnesses, and i
presence of a witness to
ments, cumulative in c
essential to a fair trial.
however, was made in th
affidavits filed. The testi
ty was strongly corrobor
other transactions throw
the conduct of the parti
leaves no reasonable do
guilt of the offense c
should have been quite a
the trial been postponed,
the circumstances adver
inclined to say that the
of discretion as to just
our part.

4. Mrs. Hasty testified
fendant and Olive Whit
tercourse in the barn at

Digitized by Google

state of the record we do not think it was error not to have required the state to elect the transaction it would rely upon. It is not as though several acts had been proven, on any one of which the defendant may have been found guilty. The particular offense was designated by the evidence, and all the other testimony was received in corroboration. Suppose, however, the testimony of Mrs. Hasty be eliminated, must there still have been an election? We think not; for, though the evidence leaves little doubt as to the adulterous relation, it fixes no time. It is as though a man and woman were shown to have roomed together and occupied the same bed for six months. This would afford ample proof of intercourse, but no one would pretend to say the specific date must be shown, or that the state must fix it by election. In this case the evidence pointed out the transaction, and no additional election was required.

5. Notice that witnesses who testified before the committing magistrate would be called was served on the attorney of defendant, the officer's return reciting that the latter was not found within the county. The notice was essential under section 5373, as amended by Acts 28th Gen. Assem. p. 95, c. 135, because of minutes of the witnesses' testimony not having been returned with the indictment. To authorize service on the attorney, instead of the accused, it is not essential that the latter should have gone beyond the boundaries of the county. It is sufficient that the officer, after diligent search, failed to find him.

6. The evidence tended to show that defendant and Olive White went to Oklahoma Territory, where he took a homestead, and that they lived in a sodhouse as husband and wife for about six months. A child was born to her in April, 1901, which he subsequently named Virgil St. Clair Hasty. She died about six months thereafter, and over her grave he caused a tombstone to be erected, inscribed with these words: "Olive, wife of James C. Hasty, died September 1, 1901, age 21 years and 29 days." It is objected that defendant is not shown to have caused this inscription to be placed on the stone. We think this fairly to be inferred, in view of his relations with deceased, from Hilliker's testimony that defendant told him a tombstone was to be erected to her memory and that he should pay for it out of the proceeds of defendant's property. He had attended to her burial, and the board, with "Hasty" written on it, was at the grave before his departure. The rulings by which the evidence was received were correct.

7. A photograph was proven to be that of Olive White several years previous to her death. It was properly received in evidence as tending to identify her as the female with

8. The father of Olive White testified to having two letters written from Oklahoma, and that, after asking defendant whether he was going to do anything about the injury to his family, he commenced to read them. Thereupon defendant stopped him until his daughter left the room. They were then read, when the defendant said: "I see you know it all; I told Olive we would be found out." He then added "it was not true that they had lived in a dugout," as stated in one of the letters, and that the child was not as old as said, and that he told of the expense he had been at in trying to care for and save her life. These letters were received in evidence over defendant's objection. They recite that defendant and Olive White passed in Oklahoma as husband and wife; had a child, which was adopted by one Simpson after her death; that they lived in a sodhouse; that during her sickness she wished her people to be notified, but he refused, for which he was much blamed; that he gave her a suitable burial; that there was much talk because of her youth and friendless condition; and one of the letters ventures the opinion that he should be prosecuted. It will thus be seen that defendant, by what he said, admitted the contents of these letters, save in the respects pointed out. The only exception taken to them is that they contained expressions of opinion which could not have been introduced had the writer been called as a witness. But they purported to state material facts, and such portions were admissible in connection with his statements. The objection was directed to the entire letter, and not the mere expressions of opinion contained therein. It was rightly overruled.

9. In the fifth instruction the jury was told that, if Olive White became pregnant and gave birth to a child outside of Keokuk county, that fact might be considered in determining whether adulterous relations had occurred in the county within the statutory period. The evidence tended to show that defendant recognized the child as his own, gave it his name, and executed articles of adoption of it to one Simpson. Mrs. Hasty testified to seeing him in flagrante delicto with Olive White in July, 1900, in Keokuk county, about nine months—the period of gestation—previous, and he did not leave that county until October following. Manifestly, the birth of the child and the admission of parentage by defendant tended to show that Olive conceived it from him nine months previous, and, as both were then in Keokuk county and several months after that, that the crime must have been committed there. Hence proof of their relations indicated something more than mere disposition to do wrong, and the criticism of the eighth in-

Digitized by Google

a witness, and he insists that one of the torneys assisting the county attorney, in s arguments to the jury, alluded to the fact, violation of section 5484 of the Code. Acording to the affidavits filed, he stated, There has been no witness on the stand conadicting the very material evidence of Mrs. Iasty, and no witness has been on the stand s to the cow barn transaction." It is arued that as but three persons were present nd Olive White was dead, but one witness, he defendant, could have contradicted her estimony to seeing them engaged in sexual ntercourse, and hence that the statement nust be construed to allude to his failure to estify. The trouble with this is that an argument is necessary to show the connection. In State v. Baldoser, 88 Iowa, 55, 55 N. W. 97, the reference was direct. But the state has the right to call the jury's attention to the fact that certain evidence is uncontradicted, even though the accused may be the only person who might have contradicted it. State v. Snider (Iowa) 91 N. W. 762; State v. Seely, 92 Iowa, 488, 61 N. W. 184; State v. Kidd, 89 Iowa, 54, 66, 56 N. W. 263. The statement to which exception is taken amounted to no more than an assertion that Mrs. Hasty's evidence was uncontradicted by any witness, and, under the authorities cited, cannot be held to be within the prohibition of the statute. See, contra, Dawson v. State (Tex. Cr. App.) 24 S. W. 414. Whether the county attorney made similar statements is in dispute, and as to these we accept the finding of the district court. State v. Maynes, 61 Iowa, 119, 15 N. W. 864. Most of the criticism of the argument of another attorney assisting the county attorney at the trial is answered in State v. Burns (Iowa) 94 N. W. 238. If the crime was bitterly condemned, it may be said the undisputed facts justified strong language. If other offenses were alluded to, it was in response to argument of counsel for defendant. They had taunted the state for not prosecuting him for other crimes and delaying this prosecution until 20 days of the period of limitation. The response was that it was true that he had taken the girl into his home and seduced her, that the jury would not require five minutes to convict him of rape, and that punishment for the offense charged was all that was possible now. The rejoinder was justifiable. But the attorney went farther and declared that, "while I would not advise taking human life, Lemuel White would be justified in taking the life of defendant." This is but the expression of the attorney's opinion of what White would have the right to do in the future, not of what he ought to have done or should do. In this respect, and others, the language differs from that condemned in State v. Proctor, 86 Iowa, 698, 53 N. W. 424. On such occasions hyperbolical expressions have been conduct, not pertaining to the result of the trial, as in the instant case, they cannot ordinarily be regarded as prejudicial. It would be undertaking too much to vindicate all expressions of opinion made in the heat of argument, and this is not essential in order to sustain a conviction. If not calculated to unduly arouse the passions or to divert the jury from the proper discharge of their duty, the verdict should not be disturbed. We are not to be understood as approving the language employed. It was unsound in law. It was opposed to modern notions of good morals. Its tendency was to encourage avenging wrongs by means other than through the orderly administration of justice. And yet it was the mere suggestion of what a witness might be justified in doing in the future, and ought not to be held to have improperly influenced men of ordinary intelligence, as the jurors are presumed to have been, in the proper discharge of their duties in the present. They were not concerned with what the father of the girl might do thereafter, but with what the defendant had done in the past.

11. A woman asked a juror, pending the trial, whether he knew he was related to Mrs. Hasty, and then said they were fourth or fifth cousins. He responded that that would make no difference. It appears that he had never seen the woman and had never seen Mrs. Hasty prior to the trial, and that if they were related neither of them knew the fact. There was no misconduct save on the part of the busybody who interfered. See State v. Baughman, 111 Iowa, 71, 82 N. W. 452.

The exception taken to the seventh instruction is disposed of by State v. Briggs, 68 Iowa, 416, 27 N. W. 358. See, also, State v. More (Iowa) 88 N. W. 322. Instructions refused, in so far as correct, were included in those given. The suggestion that Mrs. Hasty's evidence ought to be construed so as to fix the time of the crime in 1899 instead of 1900 is without foundation.

Affirmed.

REED v. CUNNINGHAM et al.

(Supreme Court of Iowa. Oct. 27, 1903.)

COUNTIES—COLLECTION OF TAXES—REASONABLENESS OF AGREEMENT—APPEAL—FAILURE TO SERVE NOTICE—DELAY IN FILING AMENDED ABSTRACT—AMENDED PETITION—MOTION TO STRIKE AMENDMENT—ABSENCE OF RULING—REVIEW.

1. An amended abstract, filed long after the abstracts and arguments have been prepared, showing that some appellees have not been served with notice of appeal, will be disregarded, the matter not being a jurisdictional one.

2. Where no ruling has been had on a motion to strike an amendment to a petition, the propriety of allowing the amendment cannot be reviewed.

Digitized by Google

ing, yet, in the absence of exception or assignment of error, the propriety of allowing the amendment cannot be reviewed.

4. An agreement by the supervisors of a county to pay one-half of the amount recovered, in consideration of the person employed making diligent search for omitted or concealed property, and reporting it for taxation, and for moneys due the county from the state or other source, he to bear all expenses, including attorney's fees, is not void, as unreasonable, though one expert testifies that 15 per cent. would be reasonable; the work having been new, and no one having had any adequate conception of the labor involved, and it appearing that a large sum has been spent by the person employed for clerk hire and assistance.

Appeal from District Court, Linn County; W. N. Treichler, Judge.

Suit in equity to enjoin defendants from carrying out a contract made by defendant county with Cunningham, with reference to the collection of taxes on property omitted from assessment, to declare said contract illegal and void, to restrain defendant county from making further payments thereon, for an accounting of moneys received by Cunningham from the county, and for a judgment against all the defendants for moneys alleged to have been misapplied by the county officials. The defendants admitted the execution of the contract, and tendered other issues, which, so far as material, will be noticed in the body of the opinion. The trial court found the contract valid, and refused to annul it, but also found that the compensation agreed to be paid was unreasonable in amount, and enjoined the county and its officials from paying any further sum on the contract until the amount already paid was less than 15 per cent. of the total amount collected. It also decreed that 15 per cent. was a reasonable compensation for the services rendered by Cunningham, and defendants were enjoined from paying for such services any amount in excess of 15 per cent. of the total amount collected. Both plaintiff and Cunningham appeal. As defendant Cunningham first perfected his appeal, he will be called appellant. Affirmed in part, and reversed in part.

F. L. Anderson, for appellant Cunningham. H. C. Barber and John A. Reed, for appellant Reed. W. O. Clemans, for appellee board of supervisors of Linn county.

DEEMER, J. Long after the abstracts and arguments had been prepared, the defendant board of supervisors filed an amended abstract, and denial of the abstracts filed by Reed and Cunningham, which shows that some of the defendants were not served with notice of appeal. This amendment, having been filed so long out of time, and after all the arguments had been concluded, must be disregarded. Had it been shown that we are without jurisdiction, doubtless the paper should be considered, but the matter is not must be sustained.

The contract between Cunningham and the county of Linn is made up of a proposition on the part of Cunningham which was accepted by the board of supervisors on behalf of the county, the material parts of which proposition and acceptance are as follows:

"To the Honorable Board of Supervisors—Gentlemen: I propose to make careful and diligent search for such omitted or concealed property, and honestly and fairly report to the proper officers for assessment and entry on the tax list of all such property, if any which I shall find to exist, and also careful and diligent search for monies due your county from the state or any other source.

"Your county to pay me for such services a sum equal to one-half of all monies collected as a result of my said investigation. All expenses incurred in said investigation, including attorney's fees, to be paid by me. Payments for my services to be made to me as fast as any monies are paid into the treasury as a result of my investigation. The Auditor to be ordered to issue to me a warrant upon the Treasurer for any sum of money due me upon properly verified accounts being filed with him.

"Respectfully submitted,

"F. M. Cunningham, per Sluss.

"And the board after examining the above proposition, and hearing the evidence, and being fully advised in the premises, finds that an indispensable public necessity exists for the employment of an experienced and competent person, to make diligent and careful search in this and other counties and states for omitted, concealed and unassessed taxable property, which has been falsely, fraudulently and unlawfully concealed from the proper officers of the said county, the taxes upon which property are lawfully due; and for monies due from the state and other sources. And it appearing to the Board that Francis M. Cunningham is an experienced person in searching for, and finding such concealed, omitted and unassessed taxable property, and monies due from the state and other sources, now here accepts such proposition."

Under this contract, Cunningham discovered and reported property upon which the sum of $10,962 was collected as taxes. He received as compensation the sum of $3,800, and claims a balance of $1,619 still due. It is estimated that something like $50,000 will be collected as a result of his labors. It also appears that Cunningham's expenses in doing the work undertaken by him were from $2,500 to $3,000.

Practically all the points presented by plaintiff on her appeal have been determined adversely to her in Disbrow v. Board of Supervisors (Iowa) 93 N. W. 585, and Shine

Digitized by Google

. Cunningham (Iowa) 94 N. W. 941. The round is there so fully covered that it would e unprofitable to add anything further to he discussion. The only question not determined by these cases is the reasonableness of the compensation agreed to be paid or Cunningham's services. Plaintiff contends that, as the trial court found the contract void because unreasonable, it should have done no more than issue its injunctional decree, or, at most, that an accounting should have been had, and a decree entered ordering Cunningham to return the funds received by him, and a judgment against all the parties for that amount. This is based on the assumption that the court had the right to decree the contract void because unreasonable, and that, having so found, its enforcement should have been enjoined. And there being no claim by Cunningham on quantum meruit, a judgment should have been rendered against him and the other defendants for the amount paid out under the contract. On the other hand, Cunningham insists that the issue of unreasonableness was not and is not in the case, and that in any event the court erred in holding the contract unreasonable. While it is true that there was no pleading tendering the issue of unreasonableness when the case was tried, yet it appears that, after the evidence was adduced and the cause submitted, the plaintiff filed an amendment to her petition, pleading that the contract was unreasonable, and some other matters not necessary to be mentioned. The defendant Cunningham filed a motion to strike this amendment, but the motion does not appear to have been ruled upon, except as the trial court, in its opinion and decree, apparently based its holding on the unreasonableness of the contract. There being no specific ruling on the motion, there is nothing to consider with reference to the filing of this amendment. Should we treat the opinion and decree as constituting a ruling, then, as there was no exception thereto, and as there is no assignment of error, the appellant Cunningham is in no better position. We must treat the amendment to the petition as a proper pleading, and are then brought to the principal point in the case: Was the contract unreasonable? And if so, what relief shall be awarded plaintiff because of its unreasonableness?

It is, no doubt, true that a public corporation authorized to employ an agent or attorney may contract to pay him a reasonable compensation for services rendered or to be rendered by him, but it does not have the power to contract for an unreasonably large or excessive fee or percentage. Of necessity, the representatives of such corporations are vested with considerable discretion in such matters, and this discretion will not ordinarily be interfered with. But when it appears that the board has promised such compensation as to evidence on their part a disregard of public duty, a collusive or corrupt design, or the attempt to perpetrate a w it is the right as well as the du to interfere. These doctrines fin the authorities. Waterbury v. Cl (Tex. Sup.) 5 S. W. 81; Chester ber, 97 Pa. 455. There is no s any fraud or bad faith on the board of supervisors of Linn cou ing the contract with Cunnin burden of the contention is that was an improvident one, and s able that it should be declared v county enjoined from making payments thereon. Plaintiff ir witness who had had experienc ing out and collecting taxes, w that 15 per cent. was a reasona sation for doing the work. H gave testimony "after the fact" not enough, we take it, to sho contract has been largely perforn compensation promised was m then appears would have been We must put ourselves as nearly in the position of the parties wh tract was entered into, and ther the reasonableness of the cc agreed to be paid, from that When this contract was entere work was new, and no one seem any adequate conception of the labor involved in its performance. it is shown that Cunningham has pended over $2,500 for clerk hire ance in finding omitted property ing the taxes due thereon. True, this expenditure, the contract wil able to him, but it is not the p courts to annul contracts of mu because they were bad bargains. leans v. Warner, 175 U. S. 120, 44, 44 L. Ed. 96. In addition to work of searching for concealed a property, Cunningham agreed to penses incident thereto, including fees. This should also be taken in in arriving at the value of the ser rendered. It may be that for se formed after April 12, 1900, the c passage of chapter 50, p. 33, Acts Assem., Cunningham should rece per cent. of the amount collected, a for in that act; but as no claim o is made in argument, and as th showing as to what services were after that date, we do not make a pronouncement thereon. By the te resolution of the board of supervi ningham was to have one year fro 3, 1899, within which to perform hi In the Shinn Case, supra, it is sai Legislature had no power to abr contract. But whatever rule may ed, we do not think a taxpayer has to complain of payments already der the contract, nor to insist up leged unreasonableness of a contr has been executed in good faith b

Digitized by Google

thereof by either party, it is doubtful if he can interfere by injunction after the county has received and accepted the benefits of full performance by the other contracting party. See Kagy v. Ind. Dist. (Iowa) 89 N. W. 972. Even if the contract were abrogated by the acts of the Twenty-Eighth General Assembly, before referred to, Cunningham would be entitled to the agreed compensation for services performed by him prior to the passage of that act.

We reach the conclusion that plaintiff was not entitled to the relief demanded, or to any relief, and that the trial court was in error in rendering the decree it did.

On plaintiff's appeal the decree is affirmed, and on Cunningham's appeal it is reversed.

CALDWELL v. DRUMMOND et al.

(Supreme Court of Iowa. Oct. 28, 1903.)

PLEADING—ADMISSION—WITHDRAWAL—DISPOSITION OF HOMESTEAD—ORAL CONTRACT—VALIDITY.

1. The withdrawal of an admission contained in a pleading is sufficiently evidenced, for the purposes of appeal, by an entry on the judge's calendar.

2. The withdrawal, before trial, of an admission contained in a pleading, while it does not destroy the force thereof as evidence, nullifies its conclusiveness.

3. An oral contract, by which a homestead is to become the property of other persons on the death of the owners, in consideration of such persons taking possession and caring for the owners, followed by possession, is valid and effectual as against a child of the owners living with them.

Appeal from District Court, Linn County; H. M. Remley, Judge.

Suit in equity for the partition of real estate. The trial court found that plaintiff had no interest in the property, and he appeals. Affirmed.

Charles F. Clark and John A. Reed, for appellant. J. M. Thompson and D. E. Voris, for appellees.

DEEMER, J. John and Mary McCord, during their lifetime, owned the property in controversy, which was their homestead. Prior to some time in October of the year 1897, a daughter, Mrs. Driver, who is also plaintiff's mother, lived with them. In the last-named month Mrs. Driver died, and in April of the year 1899 the defendants moved into the property, and the McCords and the defendants occupied the premises until the death of the McCords, which occurred as follows: John, May 15, 1900, and Mary, September 27, 1901. Defendant Mary J. Drummond is a daughter of John and Mary McCord, plaintiff is a grandson, and one William McCord is a son. These were and are the only heirs of the McCords. Defendant Mary J. Drummond purchased William McCord, perhaps, upon the performance he became entitled to an undivided one-third thereof, having succeeded to the right of his mother. Defendants claim that they are entitled to the whole thereof in virtue of an oral contract between them and the McCords, entered into about the 8th day of October, 1897, whereby they (the Drummonds) were to leave their home in Chicago, come to Cedar Rapids, move into the property in controversy, and care for the McCords during the remainder of their declining years, and in consideration therefor were to receive the property upon the death of the McCords that they fulfilled their part of the contract, and are entitled to have the title to the entire premises quieted in them. They also pleaded a subsequent modification of the contract, but this plea need not be specifically set out. Plaintiff's answer to these claims was a general denial. The trial court found for the defendants, and the appeal presents but two or three questions of either law or fact.

The first point made is that defendants have not established the alleged contract. This is wholly a fact question. It is conceded that such contract must be established by clear, satisfactory, and convincing proof. We shall not set forth the various items of evidence offered to establish the alleged contract. Suffice it to say that we think the defendants have met the burden imposed upon them, and have sufficiently established the contract as claimed.

Next it is argued that defendants have not shown performance on their part, or such performance as is referable to the contract alleged. Here again we have a question of fact, and we are constrained to hold against appellant on this proposition.

2. The next point is a mixed question of law and fact. It is contended that, as the property was a homestead, it could not be conveyed, transferred, or disposed of by oral contract. Plaintiff relies upon an admission made by defendants in their pleadings that the property was the homestead of John McCord until May, 1900. This admission was afterward, and before the trial of the case, withdrawn. True, this is shown simply by an entry on the judge's calendar, but for the purpose of showing such withdrawal we think it is competent. Keller v. Killion, 9 Iowa, 329; Jones v. Field, 80 Iowa, 281, 45 N. W. 753. Of course, this withdrawal did not destroy the force of the admission as an item of evidence, but it did nullify its conclusiveness.

We have found that there was a contract such as is claimed, and that it was for what was theretofore the McCord homestead. Is such a contract, when performed on the one side, valid and enforceable? Our own cases give no uncertain answer to this proposition. See Drake v. Painter, 77 Iowa, 731, 42 N.

Digitized by Google

y in point. It is there held that such a contract for the disposition of the homestead s valid, for the reason that the making of such a contract, followed by possession, terminates the prior homestead. We need not amplify on this, as the case disposes of appellant's contention.

Appellees have established the material allegations of their cross-petition, and the decree in their favor is affirmed.

STATE SAV. BANK OF LOGAN v. HUNTER et al.

(Supreme Court of Iowa. Oct. 31, 1903.)

APPEAL—EXCEPTIONS—REVIEW.

1. Where, in a suit to set aside two conveyances alleged to be fraudulent, plaintiff took an exception only to so much of the decree as denied relief as to one of the conveyances, and did not appeal from so much of the decree as set aside the other, and no appeal was taken by the defendants, the validity of the decree, in so far as it related to the conveyance set aside, could not be reviewed.

Appeal from District Court, Harrison County; O. D. Wheeler, Judge.

Action to set aside certain conveyances of real estate as in fraud of creditors. As to a conveyance made to the defendant Carrie Hunter, the decree was in favor of plaintiff. As to a conveyance made to the defendant T. F. Jefferson, the decree was in favor of said defendant. From such adverse portion of the decree, the plaintiff appeals. Affirmed.

Roadifer & Arthur, for appellant. Cochran & Egan, for appellees.

BISHOP, C. J. Plaintiff is a judgment creditor of the defendant William Hunter, the indebtedness upon which its judgment is based antedating the conveyances in question. In 1900 said defendant was the owner of the legal title to two tracts of land in Harrison county—one of 80 acres and one of 20 acres. In the latter part of that year he conveyed (his wife joining) the 80-acre tract to the defendant T. F. Jefferson, his son-in-law. At about the same time he conveyed the 20-acre tract to his wife and codefendant, Carrie Hunter. It is conceded that William Hunter was involved in indebtedness far beyond his ability to pay. It is contended on behalf of the appellant bank that, under the evidence introduced, there should have been a decree setting aside the Jefferson conveyance. We are unable to say that the finding of the trial court to the contrary was not justified. Jefferson is a well to do farmer living four or five miles from the Hunters. He visited them occasionally, and it appears that he knew that William Hunter was indebted to some extent, but not the amount thereof. He did not know of the indebtedness to plaintiff. It seems that Hunter approached him with a proposition to sell the

was reached whe
veyance, and in
sumed an incumb
ing to $1,100, an
money. It is tru
quite informal, a
stances shown w
suspicion. But t
finding that the
not quite, the valu
presenting the det
tering upon any c
thereto, we are co
clusion that a ca
Jefferson, or parti
been made out.

Counsel upon bo
the merits of the
the conveyance of
defendant Hunter
exception to so m
related to the rel
defendant Jefferso
so much of the d
The record before
any appeal was
Hunter. We cann
question made in a
to the conveyance
which was ordered

The decree is aff

CHASE v.

(Supreme Court o

APPEAL—ASSIGNM

1. The fact that a
sustained generally
which are "ridiculou
vary the rule that a
cifically challenging
as to but part of t
insufficient to presen

Appeal from Dis
W. H. McHenry, J

Action at law to
to be due plaintiff
sale of certain real
of the trial court s
his petition the plai

Dunshee & Dorn
McLaughlin, for ap

PER CURIAM.
sustained striking fr
amendment to his
of errors, we have
presented by the o
arguments of couns
rer to the petition
tinct grounds or as
tained generally. T
specifically challeng
ruling as to but pa

Digitized by Google

it is said the present case may be treated as an exception to the rule because some of the grounds of demurrer are "ridiculous and impossible," and "it is not fair to assume that the decision could have been based on such grounds." We know of no principle or precedent which authorizes us to take the position thus suggested. A demurrer based on several distinct grounds, when sustained generally, must, for the purposes of appeal, be considered as having been sustained upon each and every ground stated, and, in order to be reconsidered or reviewed in this court, the ruling must be challenged as to each of such grounds; and it is not within our province to say that the trial court could not have considered any one or more of them.

The judgment below is therefore affirmed.

WITZEL v. ZUEL et al.

(Supreme Court of Minnesota. Oct. 30, 1903.)

TRIAL—EVIDENCE—MOTION TO STRIKE—PAROL EVIDENCE—NEW TRIAL—MISCONDUCT OF COUNSEL.

1. Lands were listed with defendants for sale on commission. They employed plaintiff to secure purchasers, for which he was to be paid a specified price per acre. Through plaintiff's negotiations sales were made for which he seeks compensation, whereby it became material to show the amount paid for several tracts. At the trial plaintiff gave oral evidence to establish the prices paid, without objection. Afterwards, when it appeared that executed contracts for sales expressed therein the consideration paid for each tract, defendants moved to strike out the entire testimony of plaintiff relative to such sales without specifying the particular part though a portion thereof was not objectionable. *Held*, that the motion was properly denied, and upon the further ground that the consideration named in the contracts was not conclusive, but might be shown by parol.

2. During the trial of the cause there were statements made by plaintiff's attorney in the presence of the jury to the effect that opposing counsel had made an admission decidedly injurious to the defendants' interests. These remarks were at once reproved by the court, who then instructed the jury to disregard the same, and disabuse their minds of any prejudicial influence caused thereby. *Held* that, the impropriety of counsel having been properly corrected, the court was not, as a matter of law, required to grant a new trial for such misconduct.

(Syllabus by the Court.)

Appeal from District Court, Blue Earth County; Lorin Cray, Judge.

Action by Louis A. Witzel against E. M. Zuel and M. C. Johnson, partners known as the Northern Land & Immigration Company. Verdict for plaintiff. From an order denying a new trial, defendants appeal. Affirmed.

W. R. & C. D. Geddes, for appellants. Thomas Hughes, for respondent.

¶ 1. See Evidence, vol. 20, Cent. Dig. §§ 1913, 1923.

thorized plaintiff to solicit and procure purchasers of their listed lands. For his services he was to have from his employers as compensation a designated price for each acre sold. Defendants, upon the issue tendered in the pleadings, claim that the only contract between the parties relative to plaintiff's pay was in writing, by which he was to have a less sum per acre than he claimed under a subsequent alleged change in the written agreement. Several sales through the instrumentality of plaintiff were admitted. As to another it was claimed that plaintiff, by fraudulent representations, induced a purchaser to deal directly with the owners, whereby defendants lost their commissions, amounting to a substantial sum and which it was sought to offset against plaintiff's claim. The cause was tried to the court and a jury. Plaintiff had a verdict which materially reduced his demands. Upon a settled case there was a motion for a new trial, which was overruled. From this order defendants appeal.

The contention upon the evidence presented an issue as to whether there had been a parol modification of the admitted written agreement between the parties, whereby, under the new arrangement, plaintiff was to be allowed a larger amount per acre for the sales secured by him than was provided for in the previously executed instrument. There was also a question of fact whether the acts arising from the conduct of plaintiff in dealing directly with the owners instead of through the defendants had been adjusted. Upon the issues raised by the pleadings the evidence fairly and reasonably presented an issue of fact to be determined by the jury, and the verdict was not so palpably against the weight of evidence that the order of the trial court must be reversed for that reason.

Several assignments are based upon the refusal of the trial court to grant blanket motions to strike out all the testimony of plaintiff concerning the sales, which included evidence of the prices paid for the tracts sold by the purchasers, upon the ground that the contracts with such purchasers had been reduced to writing. The court did not err in denying this motion for the very sufficient reason that a portion of the evidence was not objectionable, and it seems also clear that under any circumstances the amount of consideration for land in the written instruments referred to was not conclusive, but might be shown by parol.

It was claimed by counsel on the argument that the most serious error occurring at the trial was the alleged misconduct of plaintiff's counsel in remarks during the hearing which are claimed to have been prejudicial to defendants, and for which the court should have ordered a new trial. After an objection to certain evidence as incompetent and

Digitized by Google

efendant: "You told me yourself, Mr. Funk, at this man Witzel [plaintiff] had a good ase. Mr. Funk: I take exception to that emark of counsel, and I resent it. Mr. Hughes: Well, you know you did say so. The Court: Mr. Hughes, you can take that matter up on the street, but you, gentlemen of the jury, should not be influenced in the east by any talk that may be had between ounsel. You should disabuse your minds of it all. It is highly improper that such remarks should be made. Mr. Funk: I apologize to the Court. Mr. Hughes: Yes, I do also, your honor." The remarks of counsel for the plaintiff in referring to expressions of opinion by opposing counsel do not appear from the record to have been suggested by anything that occurred. They were unnecessary, decidedly improper, and called for the immediate notice and reprehension of the court, who applied thereto a most appropriate and sensible rebuke, doing all that could be justly required to correct any baneful effect that might have been produced. Nothing more appears to have been desired by defendants at the time. We cannot assume that the unauthorized statements of an attorney in the trial of a lawsuit would be more influential with the jury than the proper and temperate direction of the court to disregard the same, and we would not feel justified in holding that the court, who critically observed the course of the trial, and could better determine and judge of the effect produced by the impropriety, should set aside a verdict and order a new trial because counsel have indulged in improper and unjustifiable statements. Judicial investigation necessarily must be conducted under the supervising control of the presiding magistrate, who is entitled to and universally enjoys the esteem and respect of his coordinate servants in the administration of justice; hence we cannot presume that a jury has disregarded the timely admonition of the court where it has properly corrected the intemperate action of its officers, who acknowledge the justice of such reproval, and submit to its authority.

Order affirmed.

ARNDT v. THOMAS et al.

(Supreme Court of Minnesota. Oct. 30, 1903.)

HIGHWAY—ESTABLISHMENT—EVIDENCE—JUDGMENT—CORRECTION—NEW TRIAL.

1. In an action for trespass upon real estate the material controversy involved was the existence of a highway. Upon this issue the evidence was conflicting, and the finding of the court that there was no highway where the defendants were alleged to have trespassed *held* to have been sufficiently supported by the evidence.

2. The evidence tended to show that the defendants trespassed upon a smaller portion of

ordering an injunction to
passes, thus including plac
might have a lawful right t
conceded highways. *Held*
sion was too broad, the pa
have called the attention
and requested that a prope
(which was not done), bef
versal of the order denying

(Syllabus by the Court.)

Appeal from District
County; Lorin Cray, Judg

Action by Fred Arndt a
as and others. Verdict f
an order denying a new t
peal. Affirmed.

Thomas Hughes and W
appellants. W. L. Comsto
for respondent.

LOVELY, J. Plaintiff
quarter section of land in
Defendants, one of whom
highways, under the clair
legal road upon a portion
ed thereon, plowed and gr
60 rods in length without
the plaintiff. This action
cover damages occasioned
passes, and for an injuncti
ther interference with pl
The cause was tried to th
that defendants wrongfully
ises described, and injur
thereon, to plaintiff's inj
amount; also that defen
commit further trespasses
that defendants should be
tering upon the quarter s
the complaint to interfe
crops, or for any purpose
sent of the plaintiff, and
in accordance with such fi
moved for a new trial,
Defendants appeal from t

Upon proper assignmen
fact is presented on this re
portion of plaintiff's land
and grading was done was
If it was, defendants' acts
not, the trespasses entitle
ages, and the admitted pur
to maintain a highway at
justified an injunctional
them from so doing. Our
evidence supports the view
reasonably sustains the
trial court that the place
and grading was done was
well as that damages we
ed. During the trial it
portion of plaintiff's lan
passes were committed c
were adjacent to other publ
were on the same quarte
some extent the evidence

Digitized by Google

also on plaintiff's land. However, the real question involved was over the strip where the plowing was done, and traveled roads at other places are not disputed to be lawful roads by plaintiff.

It is urged very strenuously that the findings and order of the court went too far; that defendants, who were authorized to act for the town in improving its legal ways on plaintiff's quarter section, were thereby restrained from exercising authorized lawful rights. While it is and has been conceded that there were highways on plaintiff's quarter section which the town, through its servants, had a right to improve, the material issue contested in this suit was over the strip of land where the trespasses were committed, to which it is clear the court's attention at the trial was directed, and to which its findings were intended to apply, and, if its conclusions of law or fact in this respect embraced more than was necessary, the course of the evidence at the trial did not indicate that the defendants desired to protect the rights of the public authorities to improve highways over which there was no controversy. The real issue was over the strip where the plowing and grading was done. It was this particular place that was the especial subject of contention, and if, by reason of the fact that there were other highways at places on plaintiff's land wherein the court may have unintentionally enjoined defendants from exercising legal authority, we cannot doubt that, if its attention had been called to the inadvertence in this respect, a correction would have been made to fit the findings to the precise description of the strip as to which defendants' rights were litigated by the evidence. This appeal is from an order denying a new trial. The point that the order was too broad in the respects stated was not presented on such motion, and it seems to us very clear that, before defendants have a right to demand its reversal, some suggestion should have been made of the alleged error assigned for the first time here. This was but fair to the trial court.

Under the course adopted at the trial we do not think appellants are entitled to an absolute reversal of the order appealed from. If, as probable, it would be found by the trial court from a review of the evidence that the findings should have been limited in their scope to a specific description of the land where the trespasses were, under its findings, committed, and to which the same were intended to apply, defendants, by their failure before the new trial was denied, to insist upon their rights in this respect, are responsible for the injurious consequences which are liable to restrict their lawful privileges hereafter.

The order appealed from is affirmed, without prejudice, however, to the defendant's particularly designate the specific locality where the trespasses were committed.

Order affirmed.

REARDON v. CUSHING et al.

(Supreme Court of Minnesota. Oct. 30, 1903.)

BUILDING CONTRACT—CONSTRUCTION—EXTRA WORK—EVIDENCE.

1. In a building contract which required a claim in writing to be presented to the architect by the contractor, of any act, neglect, delay, or default of the owner or architect occasioning delay in the completion of the work, *held*, that such provision did not apply to extra work which such contractor was required to perform, to which he assented upon proper demand therefor.

2. *Held*, upon an examination of the evidence, that it was sufficient to sustain the verdict.

(Syllabus by the Court.)

Appeal from District Court, Ramsey County; Lewis, Judge.

Action by Timothy Reardon against Luther S. Cushing and others. Verdict for plaintiff. From an order denying a new trial, defendants appeal. Affirmed.

Clapp & Macartney and Stevens, O'Brien, Cole & Albrecht, for appellants. C. D. & T. D. O'Brien, for respondent.

LOVELY, J. Plaintiff entered into a written agreement with defendants whereby the former was to perform labor in the construction of a building in the city of St. Paul, and to furnish materials therefor according to designated specifications and conditions. The work and materials were furnished, and the building was completed and accepted by defendants. This action is to recover for extra work demanded by defendants and performed by the plaintiff. The cause was tried to the court and a jury. There was a verdict in favor of plaintiff, substantially according to the demand in his complaint. This appeal is from an order denying a motion for a new trial.

By the terms of the contract, the work was to be performed in 77 working days, commencing July 1, and to be concluded September 30, 1901. It was provided that if the plaintiff be obstructed or delayed in the prosecution of the work by the "act, neglect, delay or default of the owner or the architect or the employés going on a strike or by any other contractor employed by the owner upon the work [or other causes not necessary to be mentioned here], then the time fixed for the completion of the work shall be extended for a period equivalent to the time lost by reason of any or all of these causes, but no such allowance is to be made unless a claim therefor is presented in writing to the architect within twenty-four hours of the occurrence of such delay. The duration of such extension to be certified by the architect." The

Digitized by Google

'chitect and when so made the value of the ork added or omitted shall be computed by e architect and the amount so ascertained all be added to or deducted from the con- act price," with a provision for arbitration case of differences.

At the trial it was a contested issue of fact to when the plaintiff was allowed to enter pon its performance; he contending that e did not get possession of the building so to commence work until the latter part of ugust, nearly two months after the time pecified in the contract. Upon this ques- on the testimony is conflicting, but our ex- mination of the record requires us to sus- in the verdict in this respect. During the onstruction of the building, defendants from me to time demanded alterations requiring xtra work of the value of over $9,000. The uilding, when finished, complied with the ontract, except that it was not completed in me. The extra work was of the full value emanded, but it is insisted that under the rovisions relating to delays defendants could iminish plaintiff's right to compensation in a ubstantial sum, because the building was not nished until after the date required in the ontract, upon the ground that plaintiff did ot give notice of any intended claim for ex- ra work under a further stipulation in such greement which is as follows: "That should he contractor fail to finish the work at the ime agreed upon * * * he shall pay or llow the said second parties [defendants] y way of forfeiture the sum of $25.00 per lay for each and every day thereafter the aid work shall remain incomplete." The trial ourt treated this part of the contract as a rovision for liquidated damages. Without letermining whether this conclusion was le- gally accurate, it is sufficient to say, in view of the result, that defendants have no cause of complaint in this respect; hence the dispo- sition of this appeal depends upon the deter- mination of the question whether the extra work which was required by the defendants and the architect delayed the completion of the building to such an extent as excused the plaintiff from finishing it until the time he turned it over to them.

Upon the evidence, it was a fair question of fact for the jury whether the extra work caused the delay in the construction of the building until it was finished, but no no- tice was given by plaintiff, at any time aft- er the extra work was ordered, to the owners or the architect, that the same would cause delays, or that the contractor would de- mand further time, nor were any claims made on that account; and it is the serious contention of defendants, upon the construc- tion of that part of the contract which pro- vides for making claims where any act of theirs interfered with the completion of the structure, that such failure entitled them to down to a consideration of the legal effect of the following words, "act, neglect, delay or default of the owner or the architect," con- tained therein. It is urged for the defend- ants that the specific term "act," in its broadest signification, embraces a demand or order for extra work, and that it was the duty of plaintiff, when the same was re- quired, if it would cause delay which would excuse the contractor, he must within the time required notify the defendants of that fact, and make claim therefor. It is some- what difficult to appreciate the necessity of such a notice and claim being applied to ex- tra work, which was to be ordered by the architect, and of course must be assented to and acted upon by the contractor. As- suming, what is probably true, that, where each demand for extra work would not be a radical departure from the contract, it would have to be complied with, yet the defendants and the architect must have understood the natural consequence of such demands in re- tarding the completion of the building; and if the plaintiff, before he could assent to and enter upon any changes, must give no- tice to the defendants that he would claim time for delays by reason thereof, it is not easy to see that any practical benefits would accrue to either party through such informa- tion. The only apparent suggestion that can be made for the necessity of such notice would be that, if the extra work asked for would delay the completion of the building, defendants might withdraw their demand therefor. No provision in the contract is made for such an adjustment or withdrawal. An estimation of the expenses of changes requested might be difficult, and of itself im- pose exactions upon the plaintiff that would add to his specified duties. Hence, if we hold that the word "act" requires what seems to be an unnecessary duty by plaintiff, it must be upon a very strict construction. It may be that the word "act" would literally include a demand for extra work, but it seems quite plain that this was not the understanding of the parties. The evidence showing the char- acter of the alterations and the number of demands that were made for them covered very many instances. No objection appears to have been made by the plaintiff to such changes when they were assented to; nei- ther does it appear that the defendants found any fault with the course taken by the plaintiff, or suggested that they desired or relied upon formal notice and claims by plaintiff. So that, upon a finding that the extra work was of the value contended for, and that the delays were occasioned thereby, we are able to discover no equitable merit in this contention, for clearly the architect and the owner could not have been injured by the failure of plaintiff to give them notice of what they knew or should have

Digitized by Google

a just principle that, where damages are sought for the default of another, the party who suffers must do nothing to enhance, but should, if possible, minimize, the same. Hence the strict construction contended for which gives to the word "act" a larger and broader import than the other terms associated with it would place the plaintiff in a perilous position. He would have to give the notice and make the claim on every occasion that extra work was demanded, and if it was apparent that he misunderstood his duty in that respect, and failed to do so, the larger the amount of extra work furnished, the greater would be the amount of damages to be charged up against him. We are not inclined to favor what seems to us to be an unjust interpretation, but in the application of the maxim, "Noscitur a sociis," find a sensible reason for holding that the word "act" referred not to those matters which were presumably within the knowledge of both parties, and intelligently assented to by each, but rather to any act whose character is to be ascertained by reference to the other words associated with it in the same connection, and manifestly applied only to neglects or defaults of the owners and architects not acquiesced in by the contractor, or determined by agreement or convention of the parties.

Order affirmed.

J. B. STREETER, JR., CO. v. JANU.

(Supreme Court of Minnesota. Nov. 6, 1903.)

SEALED INSTRUMENTS—ACTION AGAINST PRINCIPAL—VENDOR AND VENDEE.

1. All distinctions which had theretofore existed between unsealed or simple contracts and contracts under seal (specialties), between private parties, were abrogated by Laws 1899, p. 88, c. 86, which abolished the use of private seals.

2. This statute applied in an action brought to recover as against an undisclosed principal, alleged to have been the real vendee in a contract for the purchase and conveyance of land actually executed under seal.

(Syllabus by the Court.)

Appeal from District Court, Jackson County; James H. Quinn, Judge.

Action by the J. B. Streeter, Jr., Company against Joseph Janu. Verdict for defendant. From an order denying a motion for a new trial, plaintiff appeals. Reversed.

M. E. Foley, for appellant. L. F. Lammers, for respondent.

COLLINS, J. In this action the plaintiff corporation is attempting, as vendor, to enforce payment of an amount due in accordance with the terms of a written executory contract for the purchase and conveyance of real estate. The defendant was not named in the contract, nor did he execute it. The claim is that defendant is an undisclosed person named in the instrument as vendee was simply acting as defendant's agent when he made the purchase and executed the contract. It stands admitted that plaintiff had no knowledge that this defendant was the principal until long after the contract was entered into. At the close of plaintiff's testimony, and upon motion of defendant, the court instructed the jury to find a verdict in favor of the latter, which was done, and the appeal is from an order refusing to grant plaintiff's motion for a new trial. The record shows that in the year 1902 defendant's son, a young man, entered into a contract under seal with the plaintiff, whereby the latter agreed to sell and convey to the former some 1,500 acres of land in North Dakota, the agreed consideration being $13,525. Of this amount, $75 was paid down, $3,450 was to be paid in installments prior to November 1st following, and the balance in yearly payments of $1,025, evidenced by the son's promissory notes. Two hundred and eighty-five dollars was afterwards paid to plaintiff. The son having refused to make further payments, this action was brought against the father on the ground before mentioned; the allegations in the complaint being that he was the real vendee, that the contract was actually made for him and in his behalf, and that of these facts the plaintiff was not informed until after the writing had been executed. The answer put in issue these allegations. Testimony was introduced at the trial in the nature of admissions made by the defendant father tending to show that he sent his son into Dakota to buy this land, that the purchase was made by the latter for him, and that the money which had been paid by the son and received by the plaintiff belonged to him, and not to the son.

1. We are not required to dispose of the claim of counsel for the plaintiff that the verdict cannot be sustained because it was directed at the close of the plaintiff's testimony, without waiting until defendant rested his own case, either informally, for the purposes of the motion, or formally and absolutely. It is immaterial, as we view the case, when the motion was made, because a reversal of the order appealed from on substantial grounds cannot be avoided. We will say in this connection, however, that there is nothing in the record to show that the point now made by appellant was suggested below—nothing to indicate that the attention of the trial court was called to the fact that the defendant, when making the motion, had not closed his case for any purpose. Under such circumstances, it would be wise for counsel to inform the trial court of the precise point involved and relied upon. This would be fair and just to both court and opposing counsel, and the record should show the fact, if the alleged error is to be presented on appeal.

2. We have heretofore stated that this executory contract related to Dakota land, and

Digitized by Google

is instrument was executed and delivered ithin the state of Minnesota; and we also sume that the rules of law herein prevail- g alone control. It was executed in behalf the corporation by its president, who at- ched a private seal—a scroll of the pen— id also the corporate seal. Annexed to the gnature of the vendee was his seal—a scroll the pen. Under the common-law rule, ese seals made the instrument a specialty, id removed it from that class of writings iown as "simple contracts." It is the con- ntion of defendant's counsel that when a ntract becomes a specialty, because execut- l under seal, an undisclosed principal can- ot be bound or held by its terms, unless he is in some manner ratified the act of the :ent, or received the benefit of the perform- ice by the other party, neither of which ppear in this case. The common-law rule respect to the liability of an undisclosed incipal upon a written instrument is con- sely stated in 1 Amer. & Eng. Ency. Pl. & r. (2d Ed.) 1139, etc., and cases are cited hich fully support the text. From these ci- tions it appears that, if this instrument is othing but a simple contract, the right to irsue the undisclosed principal is absolute id unrestricted. If, upon the other hand, ie common-law distinction between sealed id unsealed instruments remains, and it is specialty, an undisclosed principal cannot e shown, or held liable. No one but the par- signing can be bound by it. But the dis- nction between sealed and unsealed private ontracts has been abrogated by Laws 1899, 88, c. 86, whereby the use of private seals n written contracts is abolished, and it is xpressly declared that the addition of a pri- ate seal to an instrument in writing "shall ot affect its character in any respect." The esult of this legislation is that all differen- es theretofore existing in the law between mple contracts and specialties, executed by rivate parties, and which had long prevail- l, are discarded. They are alike in all re- pects, for the unequivocal language used iust be given its full effect. See Noyes v. 'rench Lumbering Co., 80 Minn. 397, 83 N. V. 385. Statutes of this import prevail in large number of states, but the one in ques- on is much like those of Tennessee (Shan- on's Code 1896, § 3213) and Washington Ballinger's Ann. Codes & St. 1897, § 4523). Ve find no cases in these states which bear pon the exact question now presented. Vith the distinction abolished, it follows that estimony tending to show that the act of the lleged agent was within the limits of the ower delegated, and that defendant was n undisclosed principal, was competent, and n this instance a prima facie case had been nade against him. The cause should have een submitted to the jury on this question. Order reversed and a new trial granted.

BOX v. MASON CITY & FT. D. R. CO. (Supreme Court of Iowa. Oct. 24, 1903.) Appeal from District Court, Wright County; W. S. Kenyon, Judge. Appeal from an order taxing an attorney's fees for the plaintiff in condemnation proceedings. Affirmed. Healy Bros. & Kelleher and Birdsall & Birdsall, for appellant. Nagle & Nagle, for appellee.

PER CURIAM. The sheriff's jury awarded the plaintiff $2,000, and from this award the defendant appealed. Afterwards the plaintiff also appealed. Before trial the case was settled by stipulation; the plaintiff accepting the award, and both appeals being dismissed. The defendant stipulated to pay the costs in the district court. This case is therefore governed by Heath v. Mason City & Ft. Dodge Railroad Co., 94 N. W. 467, and, following the conclusion there reached, it is affirmed.

BULLARD v. BULLARD. (Supreme Court of Iowa. Oct. 27, 1903.) Appeal from District Court, Lee County; Henry Bank, Jr., Judge. In 1893 the parties to this action were joint owners of two stallions, named Doroc Wilkes and L. R. Wilkes. Subsequently the defendant bought plaintiff's interest in the horses for $1,250, and executed a bill of sale thereof to one Beck, who advanced the money, and agreed to reconvey upon repayment, with interest. Beck declined to allow Doroc Wilkes to be "campaigned," and to obtain him for this purpose plaintiff's father entered into an arrangement with James Bullard, in May, 1894, to pay Beck and take a bill of sale of the horses from plaintiff. The latter took possession and entered the horse in several races, at the second of which a tendon was strained, disabling him for racing. They were retained by plaintiff until February, 1895, when taken by James Bullard under the bill of sale and made use of for breeding purposes. This action was begun August 5, 1896. The issue is whether the transaction by which the bill of sale was executed to James Bullard was a sale, or he merely loaned the money to pay Beck and took the bill of sale as security for the repayment of the money and interest. The cause was tried and a decree entered January 23, 1897, dismissing the petition. On the same day motion for new trial on the ground of newly discovered evidence was filed. Pending this motion James Bullard died, and the administrator of his estate was substituted as defendant. On February 13, 1899, the motion was sustained and a new trial granted. This ruling was approved by this court. 112 Iowa, 423, 84 N. W. 513. The cause was again heard, and decree entered declaring that the bill of sale was executed to secure a loan of money, that deceased had converted the property to his own use, and rendering judgment for its value above the loan with interest. The defendant appeals. Affirmed.

PER CURIAM. The plaintiff executed a bill of sale of two stallions to the deceased, James Bullard, and the only issue in the case is whether this was intended as security for the loan of money or as evidencing an absolute transfer of title. The evidence is in sharp conflict. But the district court had superior advantages in weighing the testimony as it was given in open court. In view of possession having been taken by plaintiff and retained for nearly a year without arrangement to share profits and losses, we are inclined to think the plaintiff's contention the more reasonable, and to sustain the conclusion that the instrument was executed to secure the repayment of money borrowed. The

Digitized by Google

agreement were not as definitely fixed as they might have been ought not to defeat the design of the parties. They were relatives, and, as too often happens, relied upon each other, without explicit understanding as to the obligations undertaken. No useful purpose will be subserved by a review of the evidence. We are content in approving the decree of the district court. Affirmed.

HEGG v. ZUCKMAYER et al. (Supreme Court of Iowa. Oct. 14, 1903.) Appeal from District Court, Winneshiek County; L. E. Fellows, Judge. Action to recover an amount paid by B. T. Hegg as surety for defendant J. Zuckmayer. The action was aided by attachment, which was levied on certain lots and lands in Winneshiek county, and George Zuckmayer was garnished as a supposed debtor of J. Zuckmayer. Defendant J. Zuckmayer is a nonresident, but was personally served with notice in the state of Minnesota. George Zuckmayer intervened, claiming to own the attached property, and asked that the cause be transferred to equity for trial. Plaintiff denied intervener's ownership of the land, and pleaded that the conveyance thereof to him by J. Zuckmayer was fraudulent and void, in that it was made with the intent to hinder, delay, and defraud the creditors of J. Zuckmayer in the collection of their claims. The case was referred to a referee, who recommended that plaintiff's petition be dismissed and intervener's title to the property be confirmed. This report was approved by the trial court, and judgment and decree entered accordingly. Plaintiff appeals. Affirmed. L. Bullis, for appellant. Dan Shea and George W. Adams, for appellee intervener.

DEEMER, J. This case was tried on the same evidence and before the same referee as Thompson v. Zuckmayer, 94 N. W. 476. In that case we found that a conveyance from Albert Zuckmayer to one Tozcinske was valid, and affirmed a judgment dismissing Thompson's attachment. In this case it appears that George Zuckmayer, intervener, is a son of Jacob, and that on or about April 5, 1900, Jacob conveyed the attached premises to George for the expressed consideration of $5,000. Plaintiff says this conveyance was made with intent to hinder, delay, and defraud the creditors of Jacob Zuckmayer, of which he was one. The issue presented is one of fact; the law in such cases being undisputed and well understood. We have carefully read the evidence as it appears in the abstract, and are constrained to hold, with the referee and the district court, that the conveyance of the land was in good faith for the purpose of canceling an indebtedness, owing by Jacob Zuckmayer to his son George, which was largely in excess of the value of the property received. It would be useless to set out the testimony on which this conclusion depends, and, as usual, we content ourselves with stating the results of our investigation of a question of fact. The decree seems to be correct, and it is affirmed.

IOWA LAND CO., Limited, v. HUNTER et al. (Supreme Court of Iowa. Oct. 15, 1903.) Appeal from District Court, Woodbury County; F. R. Gaynor, Judge. C. M. Swan and S. J. Quincy, for appellant. A. O. Wakefield, for appellees.

PER CURIAM. This case involves the validity of a tax deed, and is in all respects governed by the decision in Hoskins v. Iowa Land Company (decided at the present term) 96 N. W. 977. The judgment of the district court is right, and is affirmed.

ty; Z. A. Church, Judge. Action at law upon a promissory note made by defendant Curtis to Metcalf, and by him indorsed to plaintiff. Intervention by Daugherty, claiming relief against Metcalf and Curtis. Verdict directed for plaintiff, and petition of intervention dismissed. Defendant Curtis and intervener Daugherty appeal. Affirmed. McCrary & McCrary and M. E. Hutchinson, for appellants. Tait & Helsell, for appellee.

PER CURIAM. The record in this case is exceedingly confused, but we have studied it with care, and believe the judgment of the district court to be right. Defendant Curtis appears to have no pretense of defense to the note sued upon. He concedes that he owes the sum which it represents, but thinks that as a matter of justice and right the payment should be made to Daugherty. Metcalf makes no defense, and, indeed, seems to have been dismissed from the action by plaintiff at an early stage of the proceedings. The petition of intervention alleges that the note in suit was made as a part consideration for land sold by intervener, through Metcalf as agent, to defendant Curtis, and alleges fraud on the part of the agent. Assuming that any fraud is shown, plaintiff is clearly a bona fide holder of the note, and intervener can have no relief against him. We think, however, that no fraud is established, and that the intervention was properly dismissed. The judgment below is affirmed.

STATE v. BALLUFF. (Supreme Court of Iowa. Oct. 31, 1903.) Appeal from District Court, Johnson County; O. A. Byington, Judge. The defendant was convicted of an assault with intent to commit rape. From the judgment, he appeals. Affirmed. Ewing & McDonald, for appellant. C. W. Mullan, Atty. Gen., for the State.

PER CURIAM. This cause has been submitted upon the transcript alone. Accordingly we have not the evidence in the case before us. The indictment was sufficient, and the proceedings had in the court below appear to be regular and free from error. No reason, therefore, presents itself for disturbing the judgment, and it is affirmed.

STATE v. BURNS. (Supreme Court of Iowa. Oct. 31, 1903.) Appeal from District Court, Cass County; O. D. Wheeler, Judge. The defendant was indicted and convicted of the crime of larceny from a building. From the judgment, he appeals. Affirmed. Follett & Curtis, for appellant. C. W. Mullan, Atty. Gen., for the State.

PER CURIAM. The cause has been submitted on a transcript. We have examined the same with care. No error appears, and the judgment is therefore affirmed.

STATE v. COLEMAN. (Supreme Court of Iowa. Oct. 31, 1903.) Appeal from District Court, Polk County; S. F. Prouty, Judge. The defendant was convicted of the crime of adultery, and he appeals. Affirmed. Walter McHenry, for appellant. C. W. Mullan, Atty. Gen., for the State.

PER CURIAM. This case has been submitted to us upon the transcript filed in this court. We have examined the same to ascertain if any errors were committed by the trial court, and, finding none, the judgment is affirmed.

STATE v. IRWIN. (Supreme Court of Iowa. Oct. 6, 1903.) Appeal from District

Digitized by Google

ne crime of murder in the first degree. This defendant demanded a separate trial, and was so tried, and convicted of murder in the second degree, and was sentenced to a term in the penitentiary. From the judgment entered against him, he appeals. Affirmed. W. P. Ferguson and G. I. Miller, for appellant. Chas. W. Mullan, Atty. Gen., and Charles A. Van Vleck, Asst. Atty. Gen., for the State.

PER CURIAM. Dennis, codefendant of this defendant, was first tried and convicted. On appeal to this court the judgment rendered as against him was affirmed. The opinion in that case was filed during the January, 1903, term, and may be found in 94 N. W. 235. It is conceded by counsel for appellant that the record in this case is to all intents and purposes the same as in the Dennis Case. So, too, the points relied upon for a reversal are identical with those urged in favor of Dennis. In fact, the argument in that case is the argument filed in this; the names only being changed. It is proper that we state in this connection that the record was complete and the arguments filed in this case before the opinion was handed down in the Dennis Case. To again discuss the questions made would serve no good purpose. Our views may be fully ascertained by reference to our former opinion, and we are satisfied with the same. This defendant and Dennis were together, and evidence which was sufficient to convict one is sufficient to support a judgment against the other. Affirmed.

STATE v. LUENSE. (Supreme Court of Iowa. Oct. 31, 1903.) Appeal from District Court, Clayton County; A. N. Hobson, Judge. The opinion states the case. Affirmed. S. T. Richards and D. D. Murphy, for appellant. C. W. Mullan, Atty. Gen., for the State.

PER CURIAM. The defendant was indicted, tried, and convicted of the crime of adultery. From the judgment entered against her, she appeals. The cause has been submitted to us upon the transcript filed in this court. We have examined the same with care, and find no error. The judgment is therefore affirmed.

FERGUSON v. FRINK. (Supreme Court of Michigan. Sept. 15, 1903.) Error to Circuit Court, Clinton County; George P. Stone, Judge. Action by Lydia Ferguson against Miner R. Frink. Judgment for defendant, and plaintiff brings error. Affirmed. Norton & Dooling, for appellant. H. E. & E. L. Walbridge, for appellee.

HOOKER, C. J. The plaintiff, a married woman, began this action in assumpsit to recover an alleged balance, which she claims that the defendant withheld from her on a settlement of his account as her guardian, made when she reached the age of 21 years, being upwards of 20 years ago. The statute of limitation was pleaded, and the plaintiff sought to avoid its application by reason of a fraudulent concealment of the cause of action. The court directed a verdict for the defendant, upon the ground that there was an entire absence of proof of such concealment. Plaintiff brought error. Three questions are discussed in plaintiff's brief, viz.: (1) Did defendant fail to pay to plaintiff her share of the sums that came into his hands as guardian for herself and her brother and sisters? (2) Was the settlement made by him with the plaintiff a just and fair one, and binding on her, in view of the fact that she did not know that it did not include certain amounts to which she was entitled? (3) Was there any evidence that tended to

fendant is not chargeable with a concealment of a cause of action, v clearly appears that the settlemen honest and fair one that we should l permit a verdict to the contrary to st the statute not pleaded. The judgm firmed. The other Justices concurre

KAHLER v. KERTSON. (Supre of Michigan. Nov. 3, 1903.) Ap Circuit Court, Kent County, in Chanc lis B. Perkins, Judge. Action by C Kahler against Louis A. Kertson. judgment in favor of plaintiff, defe peals. Affirmed. L. E. Carroll, for F. W. Clapp, for appellee.

HOOKER, C. J. The bill in this filed to compel the defendant to assi complainant one-half of 100 shares received by the latter from a corpo ganized through their efforts, and they transferred a stock and busine they had previously owned and con copartners at the city of Battle Cr cause was heard upon the merits, and was made in accordance with the pra bill. It involves a question of fact, pecial interest to any but the parties quires no discussion of the testimony. amination satisfies us of the correctne decree, which is therefore affirmed, w The other Justices concurred.

HEDLUND v. CRESIAN. (Supre of Minnesota. Oct. 30, 1903.) App District Court, Polk County; Williar Judge. Action by Ole Hedlund again Cresian. Verdict for plaintiff. From denying a new trial, defendant appe firmed. W. E. Rowe and G. A. E. F for appellant. A. R. Holston and J. ley, for respondent.

PER CURIAM. This is an action t damages for an assault and battery b ant upon plaintiff. The latter had for $800. Errors are assigned upon tions of the trial court for its failu aside the verdict as excessive. A caref ination of the record satisfies us that dence amply sustains the verdict. The tions of the trial court went no furthe lay down the correct propositions of la cable to the issues, and, while the v large, the evidence tends to show that ries were severe, with consequent pain fering, and we cannot discover su grounds to indicate that the award w through passion or prejudice on the pa jury. We are required to hold that court acted within its discretion in ref grant a new trial. Order affirmed.

HOERR v. LOEHR. (Supreme C Minnesota. Oct. 9, 1903.) Appeal from Court, Big Stone County; B. F. Webber Action by W. G. Hoerr against Qure Verdict for plaintiff. From an order de new trial, defendant appeals. Affirmed. Murphy, Thomas Kneeland, and Stocks Heard, for appellant. E. T. Young a vens, O'Brien, Cole & Albrecht, for res

PER CURIAM. This is an appeal f judgment of the district court of the co Big Stone, and the cause was submitted court upon the record herein and the b the case of O'Connor v. Gertgens, 85 Mi 89 N. W. 866. The questions presen our decision in this case are substanti same as those decided in the case cite therefore hold, following that case, t

Digitized by Google

judgment in this case must be affirmed. Let final judgment herein be so entered, but without statutory costs.

HOERR v. NELSON et al. (Supreme Court of Minnesota. Oct. 9, 1903.) Appeal from District Court, Big Stone County; B. F. Webber, Judge. Action by W. G. Hoerr against C. Nelson and others. Verdict for plaintiff. From an order denying a new trial, defendants appeal. Affirmed. L. C. Spooner and Thomas Kneeland, for appellants. E. T. Young and Stevens, O'Brien, Cole & Albrecht, for respondent.

PER CURIAM. This is an appeal from the judgment of the district court of the county of Big Stone, and the cause was submitted to this court upon the record herein and the briefs in the case of O'Connor v. Gertgens, 85 Minn. 481, 89 N. W. 866. The questions presented for our decision in this case are substantially the same as those decided in the case cited. We therefore hold, following that case, that the judgment in this case must be affirmed. Let final judgment herein be so entered, but without statutory costs.

HOERR v. SWEDBERG. (Supreme Court of Minnesota. Oct. 9, 1903.) Appeal from District Court, Big Stone County; B. F. Webber, Judge. Action by W. G. Hoerr against P. O. Swedberg. Verdict for plaintiff. From an order denying a new trial, defendant appeals. Affirmed. F. W. Murphy, Thomas Kneeland, and Stockslager & Heard, for appellant. E. T. Young and Stevens, O'Brien, Cole & Albrecht, for respondent.

PER CURIAM. This is an appeal from the judgment of the district court of the county of Big Stone, and the cause was submitted to this court upon the record herein and the briefs in the case of O'Connor v. Gertgens, 85 Minn. 481, 89 N. W. 866. The questions presented for our decision in this case are substantially the same as those decided in the case cited. We therefore hold, following that case, that the judgment in this case must be affirmed. Let final judgment herein be so entered, but without statutory costs.

HOERR v. THOMPSON. (Supreme Court of Minnesota. Oct. 9, 1903.) Appeal from District Court, Big Stone County; B. F. Webber, Judge. Action by W. G. Hoerr against Peter Thompson. Verdict for plaintiff. From an order denying a new trial, defendant appeals. Affirmed. F. W. Murphy, Thomas Kneeland, and Stockslager & Heard, for appellant. E. T. Young and Stevens, O'Brien, Cole & Albrecht, for respondent.

PER CURIAM. This is an appeal from the judgment of the district court of the county of Big Stone, and the cause was submitted to this court upon the record herein and the briefs in the case of O'Connor v. Gertgens, 85 Minn. 481, 89 N. W. 866. The questions presented for our decision in this case are substantially the same as those decided in the case cited. We therefore hold, following that case, that the judgment in this case must be affirmed. Let final judgment herein be so entered, but without statutory costs.

McGOLRICK v. MAXWELL. (Supreme Court of Minnesota. Oct. 9, 1903.) Appeal from District Court, Big Stone County; B. F. Webber, Judge. Action by James McGolrick against William Maxwell. Verdict for plaintiff. From an order denying a new trial, defendant appeals. Affirmed. F. W. Murphy, for appellant. E. T. Young and Stevens, O'Brien, Cole & Albrecht, for respondent.

PER CURIAM. This is an appeal from the judgment of the district court of the county of Big Stone, and the cause was submitted to this court upon the record herein and the briefs in the case of O'Connor v. Gertgens, 85 Minn. 481, 89 N. W. 866. The questions presented for our decision in this case are substantially the same as those decided in the case cited. We therefore hold, following that case, that the judgment in this case must be affirmed. Let final judgment herein be so entered, but without statutory costs.

MEAGHER et al. v. GANGELHOFF. (Supreme Court of Minnesota. Oct. 9, 1903.) Appeal from District Court, Traverse County; B. F. Webber, Judge. Action by John B. Meagher and others against Henry Gangelhoff. Verdict for plaintiffs. From an order denying a new trial, defendant appeals. Affirmed. F. W. Murphy, Thomas Kneeland, and Stockslager & Heard, for appellant. E. T. Young and Stevens, O'Brien, Cole & Albrecht, for respondents.

PER CURIAM. This is an appeal from the judgment of the district court of the county of Traverse, and the cause was submitted to this court upon the record herein and the briefs in the case of O'Connor v. Gertgens, 85 Minn. 481, 89 N. W. 866. The questions presented for our decision in this case are substantially the same as those decided in the case cited. We therefore hold, following that case, that the judgment in this case must be affirmed. Let final judgment herein be so entered, but without statutory costs.

MEAGHER et al. v. RIXE. (Supreme Court of Minnesota. Oct. 9, 1903.) Appeal from District Court, Traverse County; B. F. Webber, Judge. Action by John B. Meagher and others against August Rixe. Verdict for plaintiffs. From an order denying a new trial, defendant appeals. Affirmed. F. W. Murphy, Thomas Kneeland, and Stockslager & Heard, for appellant. E. T. Young and Stevens, O'Brien, Cole & Albrecht, for respondents.

PER CURIAM. This is an appeal from the judgment of the district court of the county of Traverse, and the cause was submitted to this court upon the record herein and the briefs in the case of O'Connor v. Gertgens, 85 Minn. 481, 89 N. W. 866. The questions presented for our decision in this case are substantially the same as those decided in the case cited. We therefore hold, following that case, that the judgment in this case must be affirmed. Let final judgment herein be so entered, but without statutory costs.

MEAGHER et al. v. WATKINS. (No. 13,669.) (Supreme Court of Minnesota. Oct. 9, 1903.) Appeal from District Court, Big Stone County; B. F. Webber, Judge. Action by John B. Meagher and others against Tena Watkins. Verdict for plaintiffs. From an order denying a new trial, defendant appeals. Affirmed. L. C. Spooner and Thomas Kneeland, for appellant. E. T. Young and Stevens, O'Brien, Cole & Albrecht, for respondents.

PER CURIAM. This is an appeal from the judgment of the district court of the county of Big Stone, and the cause was submitted to this court upon the record herein and the briefs in the case of O'Connor v. Gertgens, 85 Minn. 481, 89 N. W. 866. The questions presented for our decision in this case are substantially the same as those decided in the case cited. We therefore hold, following that case, that the judgment in this case must be affirmed. Let final judgment herein be so entered, but without statutory costs.

Digitized by Google

1903.) Appeal from District Court, Big Stone County; B. F. Webber, Judge. Action by John B. Meagher and others against Frank Watkins. Verdict for plaintiffs. From an order denying a new trial, defendant appeals. Affirmed. L. C. Spooner and Thomas Kneeland, for appellant. E. T. Young and Stevens, O'Brien, Cole & Albrecht, for respondents.

PER CURIAM. This is an appeal from the judgment of the district court of the county of Big Stone, and the cause was submitted to this court upon the record herein and the briefs in the case of O'Connor v. Gertgens, 85 Minn. 481, 89 N. W. 866. The questions presented for our decision in this case are substantially the same as those decided in the case cited. We therefore hold, following that case, that the judgment in this case must be affirmed. Let final judgment herein be so entered, but without statutory costs.

OPERA HOUSE CO. OF FARIBAULT v. BAXTER. (Supreme Court of Minnesota. Oct. 23, 1903.) Appeal from District Court, Rice County; Thomas S. Buckham, Judge. Action by the Opera House Company of Faribault against George N. Baxter. Verdict for plaintiff. From an order denying a new trial, defendant appeals. Affirmed. George N. Baxter and John W. Le Crone, for appellant. A. D. & A. L. Keyes, for respondent.

PER CURIAM. Defendant rented certain premises in a building belonging to the Faribault Opera House Company, and while so occupying them the building, and the lease under which he held, were conveyed to plaintiff, the Opera House Company of Faribault, and this action was brought by it for the purpose of recovering the rent remaining unpaid for a part of the term of occupancy by defendant. The answer put in issue the validity of the transfer of the property and lease to the plaintiff company. Only two of the assignments of error require notice. The court refused to admit evidence concerning the validity of the action of the board of directors of the grantor company authorizing the conveyance. The meeting of the directors was claimed to be invalid because one of the 11 members of the directory was absent from the state, had not been notified of the meeting, and was not present. The evidence was refused upon the ground that it was incompetent and immaterial. The offer of the evidence admitted that Kinsman had assigned his stock and that there was a vacancy in the directory. But, conceding that Kinsman was still a director and received no notice, yet the defendant could not test the validity of the resolution. The transfer was valid as regards defendant, for the grantor would not be permitted to take advantage of its own wrong. Conceding, further, that the resolution was invalid, and that defendant can take advantage of it in this action, it was not error to receive in evidence proof that the action of the directors was ratified at a subsequent meeting of the board. Although such ratification took place after the commencement of the present action, defendant was not prejudiced thereby. Order affirmed.

SCHMIDT v. GREAT NORTHERN RY. CO. (Supreme Court of Minnesota. July 31, 1903.) Appeal from District Court, Anoka County; A. E. Giddings, Judge. Action by Anton Schmidt against the Great Northern Railway Company. Verdict for plaintiff. From an order denying a motion for judgment or for a new trial, in the alternative, defendant appeals. Reversed. W. E. Dodge, C. S. Albert, and A. F. Pratt, for appellant. Frank D. Larrabee, for respondent.

trial was ordered, when a verdict was again rendered in favor of the plaintiff. Defendant moved for judgment or for a new trial, in the alternative, which was refused. The present appeal is from that order. On the former review we considered the cause thoroughly upon the record, and held, upon the facts disclosed therein, that the collision between defendant's passenger train and plaintiff's carriage might have been avoided by the exercise of ordinary care by the driver, who seeks recovery in this action, and held that the latter, in going upon the crossing, must have failed to look and listen for the approaching train, which was plainly observable if he had done so before he passed in front of it. The evidence upon the last trial, so far as the physical facts are concerned, does not differ in material respects from that contained in the settled case now before us. In some respects the case made by the defendant is stronger than before to show plaintiff's lack in observing the ordinary precautions which the law requires from persons approaching a railway grade crossing on the highway. It is unnecessary to restate the facts, which were fully considered and discussed on the former appeal, for our examination of the record in this case has confirmed the conclusion which we arrived at on the former appeal; and it would serve no practical or beneficial purpose to restate them, since we are fully satisfied that the previous result has not been changed in any substantial respect, and that in the record now here the physical facts disclosed demonstrate that the plaintiff failed to exercise the proper degree of care required of him to justify a recovery. Hence the former decision must necessarily be treated as the law of the case. We have given to the discussion of the merits presented by the briefs and arguments attentive consideration, but they have not overcome the controlling and decisive facts which we there held established plaintiff's contributory negligence; and we are satisfied that the result of the second trial requires us to hold that the statements made by the plaintiff that he did look and listen are conclusively met and overcome by the physical facts, which seem to be self-evident and conclusive. It does not appear to be possible that another trial of this cause is required, or that any further evidence can add to or detract from the result we were compelled to adopt. It is therefore directed that the order of the trial court be reversed, and judgment ordered for defendant.

TOWN OF BIRCH COOLEY v. NATIONAL BANK OF MINNEAPOLIS et al. (MINNEAPOLIS & ST. L. R. CO., Intervener). (Supreme Court of Minnesota. Nov. 26, 1902.) Appeal from District Court, Hennepin County; A. M. Harrison, Judge. Action by the town of Birch Cooley against the National Bank of Minneapolis and others. Judgment for plaintiff, and the Minneapolis & St. Louis Railroad Company, intervener, appeals. Affirmed. Albert E. Clarke, for appellant. John Lind and A. Ueland, for respondent.

PER CURIAM. Appeal from the judgment of the district court of the county of Hennepin. This appeal involves the same questions that were decided on the former appeal herein (90 N. W. 789), and for the reasons stated in the opinion filed on the hearing of that appeal the judgment appealed from is affirmed.

ZELL v. TYLER et al. (Supreme Court of Minnesota. Oct. 9, 1903.) Appeal from District Court, Traverse County; B. F. Webber, Judge. Action by Gustus August Zell against R. S. Tyler and John Ireland. Verdict for de-

Digitized by Google

for appellant. E. T. Young and Stevens, O'Brien, Cole & Albrecht, for respondents.

PER CURIAM. This is an appeal from the judgment of the district court of the county of Traverse, and the cause was submitted to this court upon the record herein and the briefs in the case of O'Connor v. Gertgens, 85 Minn. 481, 89 N. W. 866. The questions presented for our decision in this case are substantially the same as those decided in the case cited. We therefore hold, following that case, that the judgment in this case must be affirmed. Let final judgment herein be so entered, but without statutory costs.

In re ZEUGNER. SCHMIDT v. ZEUGNER. (Supreme Court of Minnesota. Oct. 30, 1903.) Appeal from District Court, Blue Earth County; Lorin Cray, Judge. Application of Mary Schmidt for the appointment of a guardian for Henrietta Zeugner, an incompetent. From an order granting the petition, and from an order denying a new trial, said Zeugner appeals. Affirmed. Arthur Schaub and Pfau & Pfau, for appellant. W. L. Comstock and Plymat & Plymat, for respondent.

PER CURIAM. A petition was presented to the proabte court of Blue Earth county, praying for the appointment of a guardian for the personal property of appellant on the ground of her incompetency. After hearing before that court an order was made granting the petition, from which an appeal was taken to the district court, where, after a trial before the court without a jury, the court found that by reason of the imperfection of her mental faculties appellant was incompetent to have the charge and management of her property, and ordered the appointment of a guardian as provided under section 4549, Gen. St. 1894. The proceedings were removed to this court by an appeal from an order denying a new trial. A large number of assignments of error are presented in appellant's brief, which we have examined with care; but we find no error in the record justifying a new trial. The only serious question presented is whether the findings of the trial court are sustained by the evidence. A patient examination of the testimony contained in the settled case satisfies us that the evidence is not so clearly and palpably against the findings as to warrant interference by this court. The order appealed from is therefore affirmed.

CHASE v. NEBRASKA CHICORY CO. (Supreme Court of Nebraska. July 3, 1903.)

APPEAL—REVIEW.

1. Bolton v. Nebraska Chicory Co. (decided herewith, followed) 96 N. W. 148.

Commissioners' Opinion, Department No. 3. Error to District Court, Colfax County; Hollenbeck, Judge.

"Not to be officially reported."

Action by the Nebraska Chicory Company against Charles H. Chase. Judgment for plaintiff. Defendant brings error. Affirmed.

Geo. H. Thomas, for plaintiff in error. Everitt & Wertz, for defendant in error.

POUND, C. While another point is raised, the question decided in Bolton v. Nebraska Chicory Co. (No. 12,984) 96 N. W. 148, suffices to dispose of this case also. We therefore recommend that the decree be affirmed.

DUFFIE and KIRKPATRICK, CC., concur.

PER CURIAM. The conclusions reached by the Commissioners are approved; and, it appearing that the adoption of the recommendations made will result in a right decision of the cause, it is ordered that the judgment of the district court be affirmed.

District Court, Douglas County; Dickinson, Judge. "Not to be officially reported." Action by Mary B. Swift against Birdie Boyle and others. Judgment for plaintiff, and defendants appeal. Reversed. T. B. Dysart, for appellants. E. F. Morearty, for appellee.

AMES, C. This is an appeal from an order of confirmation of a judicial sale of real estate. There are two grounds of exception assigned: First, that the property was appraised and that it sold too low. There is no allegation of fraud. Second, that one of the appraisers was not a freeholder of the county. There is no evidence tending to support this assignment, except that an attorney for the appellants made affidavit that he had carefully examined the records of the county, and was unable to ascertain therefrom that one of the appraisers was a freeholder, and that in fact he was not a freeholder. We think this evidence, alone and unrebutted, is sufficient for the purpose intended. It is recommended that the judgment of the district court be reversed, and the sale set aside.

HASTINGS and OLDHAM, CC., concur.

PER CURIAM. The conclusions reached by the Commissioners are approved; and, it appearing that the adoption of the recommendations made will result in a right decision of the cause, it is ordered that the judgment of the district court be reversed, and the sale set aside.

MONTGOMERY v. TUCKER. (Supreme Court of North Dakota. Aug. 7, 1903.) Appeal from District Court, Richland County; Lauder, Judge. Action by George S. Montgomery, as receiver, against George A. Tucker. From a judgment for plaintiff, defendant appeals. Reversed. Lee Combs, for appellant. Purcell & Bradley and Charles E. Wolfe, for respondent.

PER CURIAM. This case is not distinguishable in any way upon its facts from the case of Montgomery v. Whitbeck (just decided by this court) 96 N. W. 327. The case was tried in the district court on the same day, by the same counsel, and before the same judge as was the Whitbeck Case. The purpose of the action is the same. The pleadings and proofs are alike in essential particulars, and the case is in all respects controlled by the decision of that controversy. The judgment of the district court is reversed. That court is directed to reverse its judgment and to dismiss the action. Appellant will recover costs of all courts.

SYKES v. ALLEN.* (Supreme Court of North Dakota. July 3, 1903.) Appeal from District Court, Stutsman County; S. L. Glaspell, Judge. Action by Richard Sykes against M. C. Allen. Judgment for plaintiff. Defendant appeals. Reversed. Marion Conklin and Ball, Watson & Maclay, for appellant. J. E. Robinson and S. E. Ellsworth, for respondent.

PER CURIAM. The questions involved in this case are the same as those considered and determined in the case of Sykes v. Beck, 96 N. W. 844, in which the opinion has just been handed down. The same attorneys appear in both cases. No briefs were filed in this case, and it was agreed by counsel in open court that the disposition of this case should be governed by the decision in the Beck Case. Following the order made in that case, the district court is accordingly directed to reverse its judgment and enter judgment dismissing the action.

*Rehearing denied September 29, 1903.

Digitized by Google

urt of South Dakota. Oct. 7, 1903.) Appeal om Circuit Court, Minnehaha County; Joseph . Jones, Judge. Action by Mary Garrigan ainst Joe Huntimer and others. From a judg- ent for plaintiff, defendants appeal. Revers- . Robertson & Dougherty and Kittredge, inans & Scott, for appellants. Joe Kirby, for spondent.

HANEY, P. J. For the reasons stated in arrigan v. Thompson (S. D.) 95 N. W. 294, e judgment in this action is reversed, and a w trial ordered.

STATE ex rel. DIETRICH et al. v. PATERSON, Clerk. (Supreme Court of Wisconsin. Sept. 29, 1903.) Appeal from Circuit ourt, Douglas County; A. J. Vinje, Judge. andamus by the state, on the relation of Her- y W. Dietrich and others, against W. J. Pat- rson, the city clerk of the city of Superior, is., to place the names of relators on the offi- al ballot as the regular Republican nominees r the various elective city offices to be filled y election thereto at the spring election of 902. In the various caucus districts of the city lections were held in the spring of 1902 for e purpose of choosing delegates to the city onvention called for the purpose of placing in omination candidates for the aforesaid city ffices. The result was that 71 delegates were uly declared elected, and were duly certified, ntitling them severally to participate in the vork of the convention if they were in fact le- ally elected. In the preliminary work of organzing the convention, the right of any delegate ot receiving at the primary a majority of all he votes polled, including blank ballots, was hallenged. It appeared that of the 71 persons laiming the right to sit as members of the con- ention, 20 received at their caucuses more than alf the vote there polled, including blank bal- lots, 31 received more than half the votes polled excluding blank ballots, and 20 received only a plurality of the votes polled. The objection did not prevail. Thereupon 18 delegates, represent- ing 17½ votes, left the convention, claiming that they were, in the main, the sole parties legally entitled to participate in placing in nom- ination regular Republican nominees for the coming city election. Those who remained consisted of the 20 who received a plurality of all the votes cast, 27, representing 27½ votes, who received a majority of the votes cast excluding blank ballots, and 7 who received a majority of all votes cast. Such remaining delegates represented, as indicated, a majority of all who ity of those who received only a majority including blank ballots. They nominated a full Republican ticket for the spring election, and a political committee for the ensuing year. Those who withdrew organized as the regular Republican convention in a room near the one named in the call for the convention and nominated a full list of candidates to stand as the Republican nominees at the coming city election, and also a political city Republican committee for the ensuing year. Each list of candidates, and each city committee elected as aforesaid, was in due form certified to the city clerk, who, deeming the persons who withdrew as aforesaid to constitute a majority of those who were entitled to participate in the convention, recognized the ticket nominated by them as regular and placed their names upon the official ballot for the coming city election. This proceeding was commenced to compel the clerk to recognize the relators as the persons entitled to be placed upon such ballot as such nominees. The issue raised and decided in the court below was whether, under chapter 341, p. 624, Laws 1899, the word "majority" means a majority of all votes cast at the caucus including blank ballots. The relators' cause depended upon that issue being decided in the negative. The decision was the other way. Judgment was rendered accordingly. Relators appeal. Affirmed. T. L. McIntosh, Louis Hanitch, and A. C. Titus, for appellants. Phil. H. Perkins, for respondent.

MARSHALL, J. (after stating the facts). This cause was submitted February 25, 1903. There were then but four justices participating in the business of the court. They were equally divided as to the proper judgment to render. The disposition of the matter was delayed only to admit of further investigations, which did not lead to any material change. Since a reversal would not enable appellant to obtain relief, except by way of costs, and chapter 341, p. 624, Laws 1899, was amended by chapter 382, p. 607, Laws 1903, eliminating the feature which gave rise to the litigation, rendering it unlikely that we shall have upon the same facts the question upon which the cause turned in the court below before us again, it seems best to announce the decision of the court as of the time of the submission, in accordance with what the then situation rendered necessary if acted upon at all. The judgment appealed from is affirmed upon an equal division of the justices participating in the hearing and decision, the order to that effect to be entered as of the time the cause was submitted, to wit, February 25, 1903.

END OF CASES IN VOL. 96.

Digitized by Google

Digitized by Google

INDEX.

ABANDONMENT.

Of employment, see "Master and Servant," § 1.
Of homestead, see "Homestead," § 3.

ABATEMENT AND REVIVAL.

Judgment as bar to another action, see "Judgment," § 8.
Right of action by or against personal representative, see "Executors and Administrators," § 5.
Substitution of parties, see "Parties," § 2.

§ 1. Another action pending.
To abate a suit because of the pendency of another action, the subject-matter must be so far identical that a recovery in one action would bar a recovery in the other.—Metcalf v. Bockoven (Neb.) 406.

§ 2. Transfer or devolution of title, right, interest, or liability.
An action does not abate by removal of an administrator as party plaintiff pending the action.—Edney v. Baum (Neb.) 167.

The equity rule which prohibits purchaser of the subject of an action pendente lite from prosecution of action in the name of the original party has been abolished by Rev. Codes 1899, § 5234.—Sykes v. Beck (N. D.) 844.

§ 3. Death of party and revival of action.
A suit in equity may be maintained to reinstate a case erroneously dismissed, when there is no adequate legal remedy.—Edney v. Baum (Neb.) 167.

ABDUCTION.

See "Seduction."

ABETTORS.

Criminal responsibility, see "Criminal Law," § 1.

ABORTION.

Admissibility of evidence of other offenses, see "Criminal Law," § 6.

Evidence *held* insufficient to connect one with an abortion.—State v. Crofford (Iowa) 889.

ABSENCE.

Of witnesses as ground for continuance, see "Criminal Law," § 10.
Suspension of running of statute of limitation, see "Limitation of Actions," § 1.

ABSTRACTS.

Of record on appeal or writ of error, see "Appeal and Error," § 13.

ABUTTING OWNERS.

Assessments for expenses of public improvements, see "Municipal Corporations," § 8.
Compensation for taking of or injury to lands or easements for public use, see "Eminent Domain," § 2.
Rights in streets in cities, see "Municipal Corporations," § 11.

ACCEPTANCE.

Of deed, see "Deeds," § 1.
Of goods sold in general, see "Sales," § 4.
Of goods sold within statute of frauds, see "Frauds, Statute of," § 4.
Of rent as waiver of forfeiture of lease, see "Landlord and Tenant," § 2.

ACCESSION.

Annexation of personal to real property, see "Improvements."

ACCESSORIES.

Criminal responsibility, see "Criminal Law," § 1.

ACCORD AND SATISFACTION.

See "Compromise and Settlement"; "Payment"; "Release."

ACCOUNT.

See "Account Stated."
Accounting between partners, see "Partnership," § 4.
Accounting by executor or administrator, see "Executors and Administrators," § 6.
Accounting by guardian of infant, see "Guardian and Ward," § 5.
Accounting by trustee, see "Trusts," § 3.

ACCOUNT STATED.

Opinion evidence, see "Evidence," § 10.

In an action for a balance due on an account stated, evidence that defendant appeared to be satisfied *held* admissible.—Plano Mfg. Co. v. Kautenberger (Iowa) 743.

In an action on an account stated, evidence *held* not to justify the direction of a verdict for the defendant.—Plano Mfg. Co. v. Kautenberger (Iowa) 743.

Where a settlement is entered into in reliance on the books kept by one of the parties, and it is thereafter discovered that such party has accounted for all the money received, the settlement will be set aside, though there may have been no intentional fraud.—Leidigh v. Keever (Neb.) 106.

ACCRUAL.

Of right of action, see "Limitation of Actions," § 1.

ACKNOWLEDGMENT.

Of conveyance of homestead, see "Homestead," § 1.
Operation and effect of admissions as evidence, see "Criminal Law," § 7; "Evidence," § 5.

Digitized by Google

§ 1. **Taking and certificate.**

A member of a private banking partnership *held* disqualified from taking an acknowledgment of a chattel mortgage given to a trustee for the firm's benefit.—Farmers' & Merchants' Bank v. Stockdale (Iowa) 732.

ACQUIESCENCE.

Operation and effect of, as ground of estoppel, see "Estoppel," § 2.

ACTION.

Abatement, see "Abatement and Revival."
Accrual, see "Limitation of Actions," § 1.
Bar by former adjudication, see "Judgment," § 8.
Commencement within period of limitation, see "Limitation of Actions," § 1.
Concealment of cause of action, see "Limitation of Actions," § 1.
Constitutional guaranties of remedies, see "Constitutional Law," § 7.
Jurisdiction of courts, see "Courts."
Laches, see "Equity," § 1.
Limitation by statute, see "Limitation of Actions."
Malicious actions, see "Malicious Prosecution."
Pendency of action, see "Abatement and Revival," § 1.
Review of proceedings, see "Appeal and Error"; "Certiorari"; "Exceptions, Bill of"; "Judgment," § 5; "Justices of the Peace," § 4; "New Trial."

Actions between parties in particular relations.

See "Master and Servant," §§ 2, 6; "Partnership," § 4.
Co-tenants, see "Partition," § 1.

Actions by or against particular classes of parties.

See "Associations"; "Beneficial Associations"; "Carriers," § 2; "Counties," § 3; "Executors and Administrators," § 5; "Guardian and Ward," § 4; "Husband and Wife," § 2; "Infants," § 2; "Insane Persons," § 3; "Municipal Corporations," §§ 12, 14; "Partnership," § 2; "Principal and Agent," § 2; "Principal and Surety," § 2; "Railroads," §§ 6, 7; "Receivers," § 3.
Assignees, see "Assignments," § 3.
Banks, see "Banks and Banking," § 2.
Foreign corporations, see "Corporations," § 8.
Heirs, see "Descent and Distribution," § 3.
Legatees, see "Wills," § 6.
Purchaser of mortgaged goods, see "Chattel Mortgages," § 5.
Stockholders, see "Corporations," § 4.
Telephone company, see "Telegraphs and Telephones," § 1.
Trustees, see "Trusts," § 4.

Particular causes or grounds of action.

See "Account Stated"; "Assault and Battery," § 1; "Bills and Notes," § 6; "Death," § 1; "False Imprisonment," § 1; "Forcible Entry and Detainer," § 1; "Fraud," § 2; "Insurance," §§ 10, 11; "Judgment," § 11; "Malicious Prosecution," § 3; "Money Received"; "Negligence," § 3; "Rewards"; "Trover and Conversion," § 2; "Work and Labor."
Abatement of tax, see "Taxation," § 2.
Alienation of affections, see "Husband and Wife," § 4.
Appeal bond, see "Appeal and Error," § 32.
Bond of assignee for creditors, see "Assignments for Benefit of Creditors," § 3.
Breach of contract, see "Contracts," § 5; "Sales," § 7; "Vendor and Purchaser," § 6.
Breach of covenant, see "Covenants," § 3.
Breach of promise of marriage, see "Breach of Marriage Promise."
Breach of warranty, see "Sales," § 8.
Claims against decedent's estate, see "Wills," § 6.
Compensation of agent, see "Principal and Agent," § 1.
Compensation of broker, see "Brokers," § 3.
Conversion of mortgaged goods, see "Chattel Mortgages," § 5.
County bonds, see "Counties," § 3.
Discharge from employment, see "Master and Servant," § 1.
Fires caused by operation of railroad, see "Railroads," § 7.
Garnishment bond, see "Garnishment," § 3.
Indebtedness secured by mortgage, see "Mortgages," § 3.
Infringement of trade-mark or trade-name, see "Trade-Marks and Trade-Names," § 1.
Injuries caused by animals, see "Animals."
Injuries from discharge from sewers, see "Municipal Corporations," § 12.
Injuries to animals caused by operation of railroad, see "Railroads," § 6.
Municipal bonds, see "Municipal Corporations," § 13.
Penalty for violation of railroad regulations, see "Railroads," § 5.
Personal injuries, see "Carriers," § 2; "Master and Servant," § 6; "Municipal Corporations," § 12; "Railroads," §§ 4–7.
Price of goods, see "Sales," § 7.
Price of land, see "Vendor and Purchaser," § 5.
Recovery of insurance premiums paid, see "Insurance," § 4.
Recovery of land sold by vendor, see "Vendor and Purchaser," § 5.
Recovery of possession of mortgaged goods, see "Chattel Mortgages," § 3.
Recovery of price paid for goods, see "Sales," § 8.
Recovery of tax paid, see "Taxation," § 4.
Rent, see "Landlord and Tenant," § 4.
Services, see "Master and Servant," § 2; "Work and Labor."
Unfair competition in trade, see "Trade-Marks and Trade-Names," § 1.
Unlawful detainer by tenant, see "Landlord and Tenant," § 5.
Unlawful entry by landlord, see "Landlord and Tenant," § 5.
Wages, see "Master and Servant," § 2.

Particular forms of action.

See "Ejectment"; "Replevin"; "Trover and Conversion."

Particular forms of special relief

See "Creditors' Suit"; "Divorce"; "Injunction"; "Partition," § 1; "Quieting Title"; "Specific Performance."
Abatement of tax, see "Taxation," § 2.
Accounting by partner, see "Partnership," § 4.
Admeasurement or assignment of dower, see "Dower," § 2.
Alimony, see "Divorce," § 2; "Husband and Wife," § 3.
Construction of will, see "Wills," § 5.
Determination of adverse claims to real property, see "Quieting Title."
Enforcement or foreclosure of lien, see "Mechanics' Liens," § 3.
Establishment and enforcement of right of exemption, see "Exemptions," § 3.
Establishment and enforcement of trust, see "Trusts," § 4.
Establishment of boundaries, see "Boundaries," § 2.
Establishment of will, see "Wills," § 4.
Foreclosure of lien for rent, see "Landlord and Tenant," § 4.
Foreclosure of mortgage, see "Chattel Mortgages," § 6; "Mortgages," §§ 7–13.
Reformation of written instrument, see "Reformation of Instruments."
Removal of cloud on title, see "Quieting Title."

Digitized by Google

"Fraudulent Conveyances," § 3.
etting aside will, see "Wills," § 4.
rial of tax title, see "Taxation," § 7.

Particular proceedings in actions.

ee "Appearance"; "Continuance"; "Costs"; "Damages"; "Depositions"; "Dismissal and Nonsuit"; "Evidence"; "Execution"; "Judgment"; "Judicial Sales"; "Jury"; "Limitation of Actions"; "Parties"; "Pleading"; "Process"; "Reference"; "Stipulations"; "Trial"; "Venue."

Default, see "Judgment," § 2.
Notice of action, see "Process," § 1.
Revival, see "Abatement and Revival," § 3.
Verdict, see "Trial," § 11.

Particular remedies in or incident to actions.

See "Attachment"; "Garnishment"; "Injunction"; "Receivers"; "Sequestration"; "Tender."

Proceedings in exercise of special jurisdictions.

Criminal prosecutions, see "Criminal Law."
Suits in equity, see "Equity."
Suits in justices' courts, see "Justices of the Peace," § 3.

§ 1. Joinder, splitting, consolidation, and severance.

Proceedings to set aside a former decree relating to the same matter, and a suit to foreclose the mortgage involved, may be prosecuted in one action.—Cushing v. Schoeneman (Neb.) 346.

A complaint to determine adverse claims under Laws 1901, p. 9, c. 5, setting forth several tax liens as the basis of plaintiff's interest in the real estate involved in the suit, does not state more than one cause of action.—Blakemore v. Roberts (N. D.) 1029.

A complaint for conspiracy *held* not objectionable, as improperly uniting several causes of action, by reason of the fact that the acts alleged to have been performed in the furtherance of the conspiracy embraced different transactions.—Emerick v. Sweeney Cattle Co. (S. D.) 93.

ADEQUATE REMEDY AT LAW.

Effect on jurisdiction of equity, see "Injunction," § 1; "Judgment," § 6.

ADJOINING LANDOWNERS.

See "Boundaries."
Rights as to subterranean waters, see "Waters and Water Courses," § 2.

ADJUDICATION.

Of courts in general, see "Courts," § 1.
Operation and effect of former adjudication, see "Judgment," §§ 8, 9.

ADMEASUREMENT.

Of dower, see "Dower," § 2.

ADMINISTRATION.

Of estate of decedent, see "Executors and Administrators."
Of estate of ward, see "Guardian and Ward," § 2.
Of property by receiver, see "Receivers," § 2.

ADMIRALTY.

See "Shipping."

§ 5.
As evidence in criminal pr
inal Law," § 7.
In pleading, see "Pleadin

ADOPTI

Of by-laws by corporation
§ 2.

ADULTER

See "Food."

ADULTE

Admissions as evidence,
§ 7.
Documentary evidence,
§ 4.
Reception of evidence at
Law," § 11.

A married man, havin
with an unmarried woma
ery, under Code 1897, § 4
(Iowa) 1115.

That defendant's alleged
to a child outside of the
prosecuted for adultery
considered by the jury in
the crime was committed
view of the testimony.—St
1115.

ADVERSE C

To real property, see "Qui

ADVERSE POS

See "Limitation of Action
Conveyance of land held
perty and Maintenance."
Effect as bar of dower, see

§ 1. Nature and requi
To establish title by ad
tent to claim title must
Plant (Neb.) 348.

§ 2. Pleading, eviden view.
A charge on adverse
correct statement of the
mislead the jury.—Sherrar
15.

ADVERTISE

Publication of process, see

ADVICE OF C

As defense in action for
see "False Imprisonment
As defense in action for
see "Malicious Prosecuti

AFFIDAV

See "Depositions."
Admissibility on appeal
"Appeal and Error," §

In particular p

See "Appeal and Error," §
§ 1.
Application to open defa
§ 2.
As part of record on appea
"Criminal Law," § 18.

Digitized by Google

For service of process by publication, see "Process," § 1.

It is not essential that the jurat state that an affidavit was sworn to in the presence of or before the notary who certifies the fact. That will be presumed from the statement that the affidavit was sworn to.—Black v. Minneapolis & St. L. R. Co. (Iowa) 984.

AGE.

Competency of witnesses, see "Witnesses," § 2.

AGENCY.

See "Principal and Agent."

AGREEMENT.

See "Contracts."

AIDERS AND ABETTORS.

Criminal responsibility, see "Criminal Law," § 1.

ALIBI.

Instructions as to, see "Criminal Law," § 15.

ALIENATION.

Of affections, see "Husband and Wife," § 4.
Suspension of power of alienation of property, see "Perpetuities."

ALIMONY.

See "Divorce," § 2; "Husband and Wife," § 3.

ALLOWANCE.

Of claims against county, see "Counties," § 4.
Of compensation of county officers, see "Counties," § 1.
To surviving wife, husband, or children of decedent, see "Executors and Administrators," § 3.

ALTERATION.

Of geographical or political divisions, see "Municipal Corporations," § 1.

ALTERATION OF INSTRUMENTS.

See "Reformation of Instruments."

ALTERNATIVE JUDGMENT.

In replevin proceedings, see "Replevin," § 3.

AMENDMENT.

Of constitution of mutual insurance company, see "Insurance," § 11.

Of particular legal proceedings.

See "Pleading," § 4.
Of pleading after limitations, see "Limitation of Actions," § 1.
Of record on appeal or writ of error, see "Appeal and Error," § 13.

ANIMALS.

See "Game."
Chattel mortgage of, see "Chattel Mortgages," § 1.
Res gestæ in action for injuries to, see "Evidence," § 3.

A mortgagee of trespassing animals is not liable, under the herd law, on notice to the owner of the cattle, without notice to the mortgagee.—Goff v. Byers Bros. & Co. (Neb.) 1037.

The remedy by distress, given under Comp. St. 1901, c. 2, art. 3, to enforce a claim for damages against the owner of cattle, who is charged with the duty of keeping them off the cultivated lands of another, does not apply to a mortgagee not in possession.—Goff v. Byers Bros. & Co. (Neb.) 1037.

ANSWER.

In pleading, see "Pleading," §§ 2, 4.

APPEAL AND ERROR.

See "Certiorari"; "Exceptions, Bill of"; "New Trial."
Costs, see "Costs," § 5.
Effect of appeal on right to grant new trial, see "New Trial," § 1.
Review of proceedings of justices of the peace, see "Justices of the Peace," § 4.

Review in particular civil actions.

See "Forcible Entry and Detainer," § 1.
Foreclosure suits, see "Mortgages," § 12.

Review in special proceedings.

See "Contempt," § 1.
Assessment of taxes, see "Taxation," § 2.
Condemnation proceedings, see "Eminent Domain," § 3.
Election contest, see "Elections," § 1.

Review of criminal prosecutions.

See "Criminal Law," § 18; "Homicide," § 4.

§ 1. Nature and form of remedy.

Rulings during the trial will not be reviewed when presented on appeal.—Pettibone v. Yeiser (Neb.) 193.

Judgments of the district court on appeal from the probate side of the county court are reviewable only by petition in error.—Boales v. Ferguson (Neb.) 337.

Rulings of an interlocutory character cannot be reviewed on appeal.—Merrill v. Van Camp (Neb.) 344.

Alleged errors in exclusion of evidence cannot be examined on appeal.—John Stewart & Co. v. Allen (Neb.) 528.

§ 2. Nature and grounds of appellate jurisdiction.

Appeal from dissolution of temporary injunction restraining removal of schoolhouse dismissed in consequence of determination by state superintendent of appeal from order of removal.—Topping v. Douglas (Iowa) 1085.

The Supreme Court cannot acquire jurisdiction on appeal by consent of parties to review a judgment of the district court on appeal from the probate court.—Boales v. Ferguson (Neb.) 337.

§ 3. Decisions reviewable.

An order, in an action for damages for a nuisance and to abate it, continuing decision on demand for an injunction, for purpose of enabling defendant to remedy the nuisance, is not an order of abatement, and is not appealable.—Suddith v. Incorporated City of Boone (Iowa) 853.

Order dissolving a temporary injunction is not a final adjudication, and can be considered

Digitized by Google

r.—Hawkeye Ins. Co. v. Huston (Iowa) 895.

To entitle a party to review, there must have en a final order or judgment.—McLucas v. t. Joseph & G. I. Ry. Co. (Neb.) 115.

Where, in action to foreclose tax lien, dendant files only a motion to strike, the order erruling such motion cannot be reviewed on peal.—Leaman v. Atkinson (Neb.) 149.

A judgment for costs only is not final and eviewable.—Thompson v. Nelson (Neb.) 194; olack v. Gans (Neb.) 633.

4. Right of review.

Where nonresident defendants took part in he trial merely for the purpose of litigating he question as to whether the court had acuired jurisdiction by the service, they had no tanding on appeal to attack the validity of the udgment in any other respect.—Fowler v. enks (Minn.) 914.

A stipulation in an action that the property n question shall be sold, and proceeds deposited vith clerk of court and paid out when the court hall order that one of the parties is entitled o them, *held* not a release of errors or a waiver of the right of appeal.—Ryan v. Donley (Neb.) 19, 234.

§ 5. Presentation and reservation in lower court of grounds of review —Issues and questions in lower court.

The question of waiver by omission of facts from a petition for injunction, afterwards introduced by an amended petition therein, cannot be considered for the first time on appeal from judgment on the injunction bond.—Scott v. Frank (Iowa) 764.

Parties will be restricted on appeal to the issues on which they relied below.—Carnahan v. Brewster (Neb.) 590.

Where a party has procured a decree on one theory, he cannot obtain a modification thereof on appeal on a different theory.—Commercial State Bank v. Ketchum (Neb.) 614.

§ 6. —— Objections and motions, and rulings thereon.

Record on appeal *held* to contain nothing on which to base assignments of error as to remarks of counsel.—Goldstein v. Morgan (Iowa) 897.

Error cannot be predicated on the court's refusal to entertain a general objection that testimony offered is incompetent and immaterial.—Brier v. Davis (Iowa) 983.

The taxation of costs cannot be reviewed, where no motion was made in the court below to retax them.—Topping v. Douglas (Iowa) 1085.

Where no ruling has been had on a motion to strike an amendment to a petition, the propriety of allowing the amendment cannot be reviewed.—Reed v. Cunningham (Iowa) 1119.

Where, in an action for trespass, through inadvertence the court embraced the whole of a tract enjoining further trespasses, *held* that, if this conclusion was too broad, the parties prejudiced should have called the court's attention thereto before demanding a reversal of the order denying a new trial.—Arndt v. Thomas (Minn.) 1125.

An objection to a petition to set aside a default judgment disregarded when first raised on appeal.—MacCall v. Looney (Neb.) 238.

Where trial is had on the merits in an action to relieve against a judgment, the defeated party cannot first complain on appeal that the form of action should have been by petition, under Code Civ. Proc. § 602.—MacCall v. Looney (Neb.) 238.

Where evidence tendin
lidity of a judgment is
and no objection is made
such objection on app
(Neb.) 401.

The question of defect
capacity of plaintiff to su
the first time in the Su
v. Weckerly (Neb.) 618.

Objections to instructic
ered where the defects
—Ulrich v. McConaughey

§ 7. —— Exceptions.

An instruction not exc
garded as correctly stati
to the case.—Cameron v.
Co. (Iowa) 961.

Propriety of allowing a
on which decree is based
in absence of other rulin
amendment; there being
ment of error.—Reed v.
1119.

Error cannot be assigne
ing or refusal of an inst
ception is taken.—Ish v. M
man Ins. Co. v. Stiner (
Juel (Neb.) 166; Pope v. F
519.

The sufficiency of evide
dict is reviewable in the S
no exception was taken to
by the lower court.—Dah
353.

§ 8. —— Motions for

Where instructions are d
given, it is not necessary
refer thereto in a motio
Lingle v. Lingle (Iowa) 7

On a proceeding in erro
will not reverse a case, wl
was not presented to the
motion for a new trial, n
—Woodard v. Cutter (Neb.

The Supreme Court will
ceedings of the district c
a motion for a new trial
State (Neb.) 520.

§ 9. Parties.

An appeal will be dismi
ties; only the names of
porations, one published b
the other by a partnershi
notice of appeal. — Sheld
County Democrat (Iowa)

Where two or more par
the judgment is right as t
firmed as to all.—Storm

A motion to dismiss an
that appellant assigned the
judgment and before appe
Beck (N. D.) 844.

The purchaser of the
action after judgment and
purchaser pendente lite, un
§ 5739.—Sykes v. Beck (N.

§ 10. Requisites and transfer of cau

A petition in equity, o
hearing in the court of las
nied the applicant withou
be considered, when the ap
the utmost diligence in
cause reviewed in the Sup
v. Parkhurst (Neb.) 63.

Alleged errors must be
in the petition in error.—F
Nixon (Neb.) 117.

Digitized by Google

ceedings therefor.

Under Comp. Laws, § 550, as amended by Pub. Acts 1899, p. 380, No. 243, a complainant, after decree of mortgage foreclosure, from which an appeal has been taken without giving a bond, *held* entitled to a return of the papers to the circuit court, in order that they may be there enrolled, notwithstanding section 463.—Harmon v. Metcalfe (Mich.) 1060.

§ 12. Supersedeas or stay of proceedings.

Under Code, § 4128, *held*, that a supersedeas bond becomes effectual to prevent further acts of the sheriff under an execution in his hands only from the time the countermand from the clerk reaches the sheriff.—Edwards & Anderson v. Olin (Iowa) 742.

Under Code Civ. Proc. §§ 588, 590, before an undertaking should operate as a supersedeas, a transcript, as well as a petition in error, must be filed.—Morton v. Western Seed & Irrigation Co. (Neb.) 183.

Where a decree awards plaintiff a personal judgment, and directs the sale of the pledged property, the defendants may supersede that portion of the judgment alone directing the sale.—State v. Baxter (Neb.) 647.

The amount of a bond to be given on an appeal superseding the foreclosure of a mortgage is in the discretion of the trial court.—State v. Baxter (Neb.) 647.

Where the court fails to fix the condition of a bond on appeal from foreclosure, there is no supersedeas until the terms of the bond are fixed by the court.—State v. Baxter (Neb.) 647.

Where, on appeal from foreclosure of a mortgage, a bond is given in the amount fixed by the court and on reasonable conditions, and the district court directs sale and approves the bond, it is equivalent to an order fixing the condition as stated in such bond.—State v. Baxter (Neb.) 647.

§ 13. Record and proceedings not in record.

An amended abstract, filed long after the abstracts and arguments have been prepared, will be disregarded. — Reed v. Cunningham (Iowa) 1119.

Where a bill of exceptions is not authenticated, the Supreme Court can only see that the judgment is supported by the pleadings.—Porter v. Detrick (Neb.) 271.

If a transcript is incorrect, the appropriate remedy is to procure an additional or certified transcript. — Keeley Institute of Kansas v. Riggs (Neb.) 1010.

Where it appears that a party has willfully filed an incorrect transcript, or has altered the transcript, to deceive the court, it will be stricken from the files.—Keeley Institute of Kansas v. Riggs (Neb.) 1010.

Order extending the time for settling statement of case *held* not an abuse of discretion.—Sykes v. Beck (N. D.) 844.

§ 14. —— Matters to be shown by record.

Where the reporter's notes are filed with the clerk on the day on which the trial closed, the evidence is properly preserved, whether formally marked "Filed" or not.—In re Bruning's Estate (Iowa) 780; Salinger & Korte v. Arts, Id.

It is not necessary to set out the notice of appeal in full, and an allegation of due service of notice of appeal, if undenied, is sufficient.—Stearns Paint Mfg. Co. v. Comstock & McQuiston (Iowa) 869.

§ 15. —— Scope and contents of record.

The withdrawal of an admission contained in a pleading is sufficiently evidenced, for the purcalendar.—Caldwell v. Drummond (Iowa) 11[illegible]

Affidavits not presented to the trial court will not be considered on error, and should not be in the bill of exceptions.—State v. Fawcett (Neb.) 219.

Matters shown by affidavit or other evidence not in the statement of the case as settled will not be considered on appeal.—Fisher v. Betts (N. D.) 132.

§ 16. —— Necessity of bill of exceptions, case, or statement of facts.

Action of district court in overruling motion to dismiss an appeal will not be reversed, where ruling was based on evidence not preserved by a bill of exceptions.—Hagadorn v. Wagoner (Neb.) 184.

Where a case is brought up on error, and there is no bill of exceptions, instructions proper under any possible condition of the evidence will not be held erroneous.—Connor v. Schreiner-Flack Grain Co. (Neb.) 221.

Under Code Civ. Proc. § 303, subds. 2, 3, where a motion for a new trial is made on the bill of exceptions, the errors assigned must be contained in or annexed to the bill of exceptions.—Wenke v. Hall (S. D.) 103.

§ 17. —— Conclusiveness and effect, impeaching and contradicting.

Where the reporter's notes of the evidence bear a certain date as that of filing, it cannot be shown by affidavits on appeal that they were in fact filed on another date.—In re Bruning's Estate (Iowa) 780; Salinger & Korte v. Arts, Id.

Where the shorthand notes were certified by the trial judge and by the reporter on the day of the submission of the cause, as shown by the certificate, such certificate and the date thereof cannot be impeached by affidavits filed on appeal.—In re Bruning's Estate (Iowa) 780; Salinger & Korte v. Arts, Id.

Recitals of a bill of exceptions, allowed and signed by the trial judge, cannot be impeached by affidavits.—Phœnix Ins. Co. v. Howe (Neb.) 73.

Alleged errors in transcript of the record of the district court on appeal will not be corrected on oral representation of counsel made at the submission of the case.—Wentz v. Meyer (Neb.) 272.

The correctness of a transcript will not be tried on affidavits.—Keeley Institute of Kansas v. Riggs (Neb.) 1010.

§ 18. —— Questions presented for review.

Where a general finding is had for defendant, and plaintiff prosecutes error, without preserving the evidence in a bill of exceptions, and without a ruling on motion for new trial, the only ground of error is whether the answer states a defense.—Bemis v. McCloud (Neb.) 214.

In the absence of a bill of exceptions, if the petition contains sufficient statements of a cause of action and a proper prayer, questions necessitating a bill of exceptions will not be considered.—Grove v. Dineen (Neb.) 253.

On appeal, where there is no bill of exceptions and the record shows only the clerk's transcript, the court will examine the record far enough to ascertain whether the pleadings sustained the decree.—Grove v. Dineen (Neb.) 253.

Where the findings show a narrower liability than that enforced by the judgment, or show no liability, or a discrepancy exists between the findings and judgment, a modification or reversal may be had on the record showing such findings and judgment only.—Shelby v. Creighton (Neb.) 382.

Where the ground of complaint is that the findings justify more relief than was granted,

Digitized by Google

ly is insufficient to procure modification or versal.—Shelby v. Creighton (Neb.) 382.

19. Assignment of errors.

An assignment of error that the court erred overruling defendant's objections to evidence each and every instance appearing of record insufficient.—Suddith v. Incorporated City of oone (Iowa) 853.

An assignment of error that the court erred overruling a motion for new trial *held* not ufficient to present for review any question inolved in the motion.—Goldstein v. Morgan Iowa) 897.

Assignments of error *held* insufficient to preent any question for review.—Goldstein v. Morgan (Iowa) 897.

An assignment of error to the overruling of lefendant's motion for dismissal and for judgment at the close of plaintiff's testimony *held* insufficient.—Faville v. State Trust Co. (Iowa) 1109.

Under Code, § 4136, an assignment that the court erred in overruling the first, second, third, and fifth assignments of the defendant's motion for a more specific statement *held* insufficient. —Faville v. State Trust Co. (Iowa) 1109.

That a demurrer which has been sustained generally is based on some grounds which are "ridiculous and impossible" will not vary the rule that an assignment of error specifically challenging the correctness of only the other grounds is insufficient.—Chase v. Stearns (Iowa) 1123.

A specification of error that the verdict is against the law of the case will not raise the question of the insufficiency of the evidence.—Gagnier v. City of Fargo (N. D.) 841.

The insufficiency of the evidence will not be considered, when there is no specification as to the particulars wherein it is insufficient.—Gagnier v. City of Fargo (N. D.) 841.

§ 20. Briefs.

Where, in its brief, appellant has argued but 2 of 17 grounds on which a motion for a new trial was based, and sustained generally, it cannot argue the entire motion in its reply brief.—State Security Bank v. Burns (Iowa) 909.

On appeal the Supreme Court is not bound to pass on questions not raised in the briefs.—Farmers' Loan & Trust Co. v. Hastings (Neb.) 104.

Assertions in appellant's brief that certain assessments are valid, without stating any reasons for such opinion, *held* not to require review of findings of invalidity.—Farmers' Loan & Trust Co. v. Hastings (Neb.) 104.

Where a cause is submitted on the brief of plaintiff in error, the statements of the brief as to the record will be treated as true.—William Deering & Co. v. Walter (Neb.) 517.

A general statement in a brief that the court erred in sustaining the objections to certain testimony *held* insufficient for review.—Merrill v. Garver (Neb.) 619.

§ 21. Dismissal, withdrawal, or abandonment.

Where one defendant did not answer, and a notice of appeal was signed by the attorneys for the remaining defendants, against whom judgment was entered, the appeal would not be dismissed because the notice appeared to be taken for all the defendants from a judgment against all.—Garrigan v. Kennedy (S. D.) 89.

Under Rev. St. 1898, §§ 2831, 4033, *held* not error to deny a motion to dismiss appeal to the circuit court from the county court, on the ground that the appeal was not taken in time; records in the prescribed time.—Hanley v. Kraftczyk (Wis.) 820.

§§ 22, 23. Review.

Where a motion for a new trial on 17 grounds is sustained generally, appellant's failure to argue but 2 of the grounds necessitates an affirmance.—State Security Bank v. Burns (Iowa) 909.

Where no appeal was taken from so much of a decree as set aside one conveyance as fraudulent, that part could not be reviewed.—State Sav. Bank v. Hunter (Iowa) 1123.

The issue whether a contract for the procurement by plaintiffs of a policy of insurance for defendants was canceled by mutual consent is one of fact for the jury.—McDonnell v. Keller Mfg. Co. (Minn.) 785.

Where a cause is tried by the court, and there is a general finding for plaintiff, if any cause of action is stated, and there is evidence to sustain the finding, the judgment will be affirmed.—Omaha Brewing Ass'n v. Tillenburg (Neb.) 107.

Where the evidence before a justice was conflicting, and his judgment was not clearly wrong, the order of the district court sustaining it will be affirmed.—Bullard v. Laughlin (Neb.) 159.

A party who brings up a case on appeal impliedly consents to submit the issues for decision on the evidence in the record.—Pettibone v. Yeiser (Neb.) 193.

Error not urged in the briefs will be disregarded.—Brown v. Collins (Neb.) 173; Bemis v. McCloud (Neb.) 214.

Under Rev. Codes 1899, § 5630, governing trials to the court, and requiring all evidence offered to be preserved in the record, the Supreme Court, on a review, is required to disregard all incompetent and irrelevant evidence properly objected to.—Sykes v. Beck (N. D.) 844.

§ 24. —— Parties entitled to allege error.

A party cannot complain of matter brought out by him on cross-examination.—Goldstein v. Morgan (Iowa) 897.

A party cannot complain of the action of the trial court, had at his instance.—Storm v. Holmes (Neb.) 73.

Where the record shows that defendant has raised a question and insisted that there was not sufficient evidence to warrant the submission of a material issue, and the court submitted it, the defendant *held* not estopped on appeal to raise the same question.—Haslam v. Barge (Neb.) 245.

A party who has acquiesced in an adverse finding of fact is precluded from obtaining review of such finding on appeal.—Merrill v. Van Camp (Neb.) 344.

An instruction *held* not subject to complaint by a party who has requested a substantially similar instruction.—Union Pac. R. Co. v. Lotway (Neb.) 527.

On an appeal in equity, appellee is not concluded as to any matter directly involved in the questions raised by the appellant.—Clark v. Lancaster County (Neb.) 593.

As to matters not necessarily involved in an appeal in equity, an appellee who enters no cross-complaint is concluded.—Clark v. Lancaster County (Neb.) 593.

A party who objects to evidence cannot obtain a reversal of the judgment for want of the evidence so excluded.—Knudson v. Parker (Neb.) 1010.

Digitized by Google

Music Co. (Neb.) 617.

Affidavits cannot properly be considered in the Supreme Court to determine the disposition to be made of a case on appeal from a judgment. —Nichols v. Roberts (N. D.) 298.

§ 26. —— Presumptions.

Where the invalidity of a default judgment was denied by an answer in a suit to restrain its collection, it will be presumed, on appeal from a dissolution of the injunction, based on the pleadings alone, that such dissolution was proper.—Hawkeye Ins. Co. v. Huston (Iowa) 895.

Where defendant is allowed to amend his answer, and plaintiff does not ask for a continuation, or make any showing that it was not proper to proceed with the trial, no prejudice is shown.—Southern Pine Lumber Co. v. Fries (Neb.) 71.

On directed verdict, the reviewing court will assume the existence of every material fact which the evidence tends to prove.—Northdruft v. City of Lincoln (Neb.) 163.

Plaintiff in error must point out the errors by reason of which he claims the judgment should be reversed.—Northdruft v. City of Lincoln (Neb.) 163; Shelby v. Creighton (Neb.) 382.

On appeal, where there is no bill of exceptions, the general presumption exists that every proceeding essential to the legality of the judgment was taken.—Grove v. Dineen (Neb.) 253.

Where the evidence is not preserved, and a transcript of the pleadings is not presented, it will be presumed that the findings of fact are true.—Shelby v. Creighton (Neb.) 382.

All reasonable presumptions will be indulged in to uphold the proceedings of the trial court. —Citizens' Bank v. Stockslager (Neb.) 591.

In a trial to the court, where the finding is based on sufficient competent evidence, it will be presumed that incompetent evidence was disregarded.—Arabian Horse Co. v. Bivens (Neb.) 621.

§ 27. —— Discretion of lower court.

The discretion of the circuit judge on the question of amending the declaration in a suit on a benefit certificate will not be reviewed on appeal, except for abuse.—Lord v. National Protective Soc. (Mich.) 443.

The power to vacate judgments or orders at the term at which they were rendered exists independent of statute.—Eager v. Blake (Neb.) 74.

The discretion of the court in awarding costs will not be interfered with unless the facts show abuse of such discretion.—Porter v. Trompen (Neb.) 226.

The submission of interrogatories for special findings is in the discretion of the court.—Huber Mfg. Co. v. Gotchall (Neb.) 611.

§ 28. —— Questions of fact, verdicts, and findings.

A judgment, though based on the uncorroborated testimony of the plaintiff against the corroborated testimony of the defendant, will not be reversed, unless contrary to the overwhelming weight of the evidence.—Stevens v. Michigan Soap Works (Mich.) 435.

Where there is any competent evidence to sustain the judgment on a question of fact, it will not be disturbed.—Buck v. Oldeman (Neb.) 117.

The usual presumptions in favor of a finding of the trial court do not obtain on appeal in Hellerman v. O'Neill (Neb.) 244; Pardee v. Nelson (Neb.) 630.

Where there is some evidence to support the allegation of no proceeding at law in foreclosure, the decree will be affirmed.—Brown v. Collins (Neb.) 173.

A finding that a deed was an absolute conveyance, and not a mortgage, will not be disturbed, where sustained by the evidence.—Farmers' & Merchants' Ins. Co. v. Hahn (Neb.) 255.

A finding on conflicting evidence will not be disturbed.—William Deering & Co. v. Walter (Neb.) 517; Sullivan Sav. Inst. v. Sharp (Neb.) 522; Holt v. Rust-Owen Lumber Co. (Neb.) 613; Warder, Bushnell & Glessner Co. v. Myers (Neb.) 992.

Findings of a jury will be set aside, where there is not sufficient evidence to support them. —Sovereign Camp Woodmen of the World v. Hruby (Neb.) 998.

A verdict of a jury based on conjecture cannot stand.—Sovereign Camp Woodmen of the World v. Hruby (Neb.) 998.

A trial court's ruling on the question of identification, preliminary to the admissibility of photographs, will not be reversed on appeal, unless the ruling is against a very clear preponderance of the evidence.—Hupfer v. National Distilling Co. (Wis.) 809.

Where a verdict, in an action for injuries by reason of a defective sidewalk, found that plaintiff was guilty of contributory negligence, an order denying a motion to set it aside will not be reversed on appeal, unless clearly wrong.—Bohn v. City of Racine (Wis.) 813.

A special finding of the jury will not be reversed, if there is any credible evidence to support it.—Wisconsin Farm Land Co. v. Bullard (Wis.) 833.

§ 29. —— Harmless error.

On a will contest, certain instructions *held* not prejudicial to proponent.—Lingle v. Lingle (Iowa) 708.

Failure of the court in an action on a note to call the jury's attention to evidence of a new consideration to support a surety's undertaking to pay the note as a principal *held* not reversible error.—Wilson v. Onstott (Iowa) 779.

Under Code, § 3601, a judgment determining the relation of parties on a note *held* not to be disturbed on the ground that in the absence of a cross-petition the court was without jurisdiction to determine such liability.—Pratt v. Fishwild & Williams (Iowa) 1089.

In an action for conversion of property sold under an execution, refusal of the court to permit the sheriff to amend his return to the writ *held* harmless.—Faville v. State Trust Co. (Iowa) 1109.

Where a verdict might have been rendered on a ground supported by the law and the facts, or on a ground authorized by erroneous instructions, the giving of the erroneous instructions was prejudical error.—Curtis v. Curtis (Mich.) 32.

In an action for the death of a servant, caused by the falling of a defective gate, it was not prejudicial error for the court to permit a witness to testify as to whether it was the duty of defendant's superintendent to keep the gate in repair.—Storrie v. Grand Trunk Elevator Co. (Mich.) 569.

Removal of a plug from a gate, introduced as an exhibit on first trial of an action by the jury, *held* no ground for reversal of the second judgment, where the plug was identified

Digitized by Google

Elevator Co. (Mich.) 569.

The exclusion of the testimony of a witness not bearing on the question in issue *held* harmless error.—Stevens v. Beardsley (Mich.) 571.

It is immaterial that incompetent evidence is introduced to establish a conceded claim.—Union Cent. Life Ins. Co. v. Prigge (Minn.) 917.

Where the evidence sustains the findings, and the findings sustain a formal judgment rendered thereon, the judgment will not be reversed because of an erroneous conclusion of law deduced from the findings of fact.—Rosso v. Milwaukee Harvester Co. (Neb.) 213.

Error cannot be predicated on the exclusion of immaterial matters from the jury.—Brown v. Silver (Neb.) 281.

The refusal of a court to perform an act which is without legal force will not be reviewed.—Baldwin v. Burt (Neb.) 401.

A judgment in an action tried to the court will not be reversed because of admission of irrelevant evidence.—Metcalf v. Bockoven (Neb.) 406.

Instruction that notice to "any of the municipal authorities" of defects in a sidewalk was sufficient notice to the city *held* not prejudicial. —City of Lincoln v. Miller (Neb.) 484.

A party cannot complain of error in an instruction from which he has suffered no prejudice.—William Deering & Co. v. Walter (Neb.) 517.

The admission in evidence of a book showing an account between a decedent and one who had filed a claim against his estate, *held* not prejudicial error.—Bennett's Estate v. Taylor (Neb.) 669.

Where the law in an instruction tendered is resolved in favor of the party offering it, he cannot complain of a refusal of instruction.—Korbel v. Skocpol (Neb.) 1022.

The striking of a witness' answer on cross-examination *held* without prejudice, where her statement with reference to the same fact on direct examination was not stricken.—Butler v. Davis (Wis.) 561.

The admission in evidence in an action for malicious prosecution of the justice's minutes in the criminal case *held* not prejudicial error, when it was shown that the complainant testified substantially to the facts appearing in the minutes.—Eggett v. Allen (Wis.) 803.

Erroneous admission of evidence to prove an estoppel to claim broker's commissions *held* harmless, in view of a finding that plaintiff had released the owner from his contract to pay such commissions.—Wisconsin Farm Land Co. v. Bullard (Wis.) 833.

§ 30. —— Subsequent appeals.

The rule that a prior decision on appeal is the law of the case does not apply to propositions on which the court was equally divided.—Baldwin v. Burt (Neb.) 401.

On a second appeal on substantially the same record, the former decision is the law of the case.—Merrill v. Van Camp (Neb.) 617.

On a second appeal, no matter necessarily involved in the first appeal will be re-examined. —Connecticut Trust & Safe Deposit Co. v. Fletcher (Neb.) 988.

§ 31. Determination and disposition of cause.

The decision of the Supreme Court on a first appeal becomes the law of the case.—Russ v. American Cereal Co. (Iowa) 1092.

Where the effect of a deposit of municipal bonds has been determined on a former appeal, evidence as to the understanding of the

Frankfort (Mich.) 1056.

Where a judgment base jury is reversed for errone Supreme Court will not en appellant.—Schmid v. Vi (Mich.) 1056.

Where, on appeal, the j and the cause remanded, th such further action as th and discretion dictate.—St 121.

Where a bill shows no e dismissing it will be affirme v. Boehl (Neb.) 633.

Where a decree is rev Court may remand, with petition and bring in new rigation & Water Power 996.

Where the court found ments in favor of a bank the bank surrendered certs ing to defendant, but the close the amount due the b erty was transferred, the manded for further procee Mielenz (Wis.) 426.

Where an order denying a cate a judicial sale was rev to be performed within a be fixed by the court, and n it was error for the court with the mandate because not performed within a reas v. Smith (Wis.) 544.

Under Rev. St. 1898, § 3 court on defendant's motion finding from an affirmative swer, because contrary to dence, the Supreme Court, decision, may remand for howak v. Grochoski (Wis.) 5

Where a special verdict and motion made for judgm the verdict, the Supreme Co that defendant was entitle remand, with direction to e —Muench v. Heinemann (W

The decision on appeal *h* case on a subsequent trial Allen (Wis.) 803.

§ 32. Liabilities on bo takings.

Where, after judgment a an execution issued, and the error and filed a supersede stricken from the files, an the judgment plaintiff sued ment against the stockhold tion, and the judgment was such facts constitute no d against the surety on the English v. Smith (Neb.) 60.

Parties to an appeal bon ute, to a court to which n are liable if the court wi tertains the appeal and adverse to the appellant.— (Neb.) 166.

One who gives a supersed force, pending appeal, an at by the court, cannot, in d the bond, say that defend bond was given, had no int —Metcalf v. Bockoven (N

APPEARA

Under Comp. Laws 1887, cuit court *held* to have h

Digitized by Google

tried in the circuit court by agreement between the parties.—Ramsdell v. Duxberry (S. D.) 132.

APPLIANCES.

Liability of employer for defects, see "Master and Servant," § 3.

APPLICATION.

For insurance as part of contract, see "Insurance," § 3.
Of payment, see "Payment," § 2.

APPOINTMENT.

Of executor or administrator, see "Executors and Administrators," § 1.
Of guardian, see "Guardian and Ward," § 1.
Of receiver of corporation, see "Corporations," § 7.
Of trustee, see "Trusts," § 2.

APPORTIONMENT.

Of costs, see "Costs," § 1.
Of special assessments, see "Municipal Corporations," § 8.
Of tax, see "Taxation," § 2.

APPRAISAL.

On foreclosure, see "Mortgages," § 10.

APPROPRIATION.

Of water rights in general, see "Waters and Water Courses," § 4.

ARBITRATION AND AWARD.

See "Reference."

ARGUMENT OF COUNSEL.

In civil actions, see "Trial," § 3.
In criminal prosecutions, see "Criminal Law," § 11.

ARMY AND NAVY.

The commissioners of the Soldiers' Home are personally liable in damages if they maliciously expel a member.—Black v. Linn (S. D.) 697.

Members of the State Soldiers' Home may be discharged for refractory or unbecoming conduct.—Black v. Linn (S. D.) 697.

ARREST.

See "Prisons."
Illegal arrest, see "False Imprisonment."
Mandamus to compel arrest, see "Mandamus," § 1.

ASSAULT AND BATTERY.

Assault with intent to kill, see "Homicide."
By employer on servant as justifying abandonment of contract, see "Master and Servant," § 1.
Conflicting statements of witness, see "Witnesses," § 4.

§ 1. Civil liability.

In an action for assault on a female, evidence of her character and reputation for chastity *held* relevant to the question of damages, as well as the issue as to the commission of the assault.—Barton v. Bruley (Wis.) 815.

A person, attacked or formidably threatened by three persons, may avail himself of the right of self-defense against the nearest assailant, though it is from the others that great bodily harm is apprehended.—Hoy v. State (Neb.) 228.

ASSESSMENT.

Of compensation for property taken for public use, see "Eminent Domain," § 3.
Of damages, see "Damages," § 5.
Of expenses of public improvements, see "Municipal Corporations," §§ 8, 9.
Of loss on insured, see "Insurance," § 4.
Of tax, see "Taxation," § 2.

ASSIGNMENT OF ERRORS.

See "Appeal and Error," § 19.

ASSIGNMENTS.

For benefit of creditors, see "Assignments for Benefit of Creditors."
Fraud as to creditors, see "Fraudulent Conveyances."
In bankruptcy, see "Bankruptcy," § 1.
Transfer of cause of action ground for abatement, see "Abatement and Revival," § 2.

Transfers of particular species of property, rights, or instruments.

See "Bills and Notes," § 4; "Judgment," § 10; "Mortgages," § 4.
Admeasurement or assignment of dower, see "Dower," § 2.
Certificates of sale under execution, see "Execution," § 4.

§ 1. Requisites and validity.

Evidence in garnishment proceedings against an executor and devisee by a judgment creditor of an heir *held* insufficient to show an assignment of the heir's interest to the devisee.—Mally v. Mally (Iowa) 735.

§ 2. Operation and effect.

In a suit for the conversion of a cause of action assigned to defendant to secure the payment of a debt, evidence that plaintiff was indebted on a note payable when he should obtain judgment in the action assigned *held* not to authorize defendant to use the proceeds from a wrongful settlement of the cause to pay the note.—Curtis v. Curtis (Mich.) 32.

§ 3. Actions.

In a suit for the conversion of a cause of action assigned by plaintiff to defendant to secure the payment of a debt, evidence that plaintiff was indebted to defendant on a note payable when plaintiff should recover judgment in the action assigned *held* admissible.—Curtis v. Curtis (Mich.) 32.

In an action for the conversion of a cause of action assigned to defendant to secure a debt, the jury *held* properly authorized to consider the litigation of the action assigned before the assignment as bearing on its value.—Curtis v. Curtis (Mich.) 32.

ASSIGNMENTS FOR BENEFIT OF CREDITORS.

See "Bankruptcy," § 1.
Security for costs in action on bond of assignee for creditors, see "Costs," § 2.

§ 1. Construction and operation in general.

Where a purchaser under conditional contract of sale transferred the property to his assignee for creditors, the assignee acquired no title as

Digitized by Google

ecorded.—In re Wise (Iowa) 872.

2. Rights and remedies of creditors. A conditional vendor of chattels *held* entitled o recover the same from the buyer's assignee or the benefit of creditors by intervention in he assignment proceedings.—In re Wise (Iowa) 872.

A conditional vendor of chattels, a part of which were transferred to the buyer's assignee n insolvency, *held* entitled to retake the articles transferred and prove the balance of his claim. —In re Wise (Iowa) 872.

A seller of chattels under a conditional sale *held* not required to surrender a note given therefor by the buyer, who transferred the chattels to his assignee in insolvency, until the note had been satisfied.—In re Wise (Iowa) 872.

Where chattels sold under conditional sale were transferred to the purchaser's assignee in insolvency, no demand was necessary before the purchaser was entitled to apply for an order directing their return.—In re Wise (Iowa) 872.

Where the value of articles sold under conditional contract, and sought to be recovered from the purchaser's assignee for creditors, was fixed by the contract, evidence as to their value was immaterial.—In re Wise (Iowa) 872.

The creditor of an assigned estate *held* to have assented to a redelivery of the property by the assignee to the assignor.—Ringenoldus v. Abresch (Wis.) 817.

The statutes requiring the filing of claims against insolvent do not relate to a debt incurred by an assignee on behalf of the estate after the assignment to him for the benefit of creditors.—Ringenoldus v. Abresch (Wis.) 817.

§ 3. Liabilities on assignees' bonds. Under Rev. St. 1898, §§ 1700, 1701, *held*, that creditors of an assignee of an insolvent might bring an action on the assignee's bond for his act in redelivering the property to the assignor. —Ringenoldus v. Abresch (Wis.) 817.

An action on the bond of an assignee of an insolvent *held* not objectionable as a collateral attack on the order discharging the assignee. —Ringenoldus v. Abresch (Wis.) 817.

An action on the bond of an assignee of an insolvent for damages for violation of the order discharging him *held* properly brought, and the remedy was not an application under Rev. St. 1898, § 2832, authorizing the court or judge to "relieve a party from an order" made through mistake or inadvertence.—Ringenoldus v. Abresch (Wis.) 817.

An order discharging an assignee, and ordering redelivery of the property to the assignor, on certain conditions, *held* not to discharge the assignee from liability on his bond on his failure to observe the conditions.—Ringenoldus v. Abresch (Wis.) 817.

Assent of a creditor of an assigned estate to a redelivery of the property to the assignor *held* to release the sureties on the assignee's bond.—Ringenoldus v. Abresch (Wis.) 817.

In an action against the surety on the bond of an assignee for creditors, for the assignee's failure to observe the conditions on which he was authorized to redeliver the property to the assignor, *held* immaterial that the sureties might not be liable for debts incurred in the management of the estate. — Ringenoldus v. Abresch (Wis.) 817.

ASSOCIATIONS.

See "Beneficial Associations"; "Building and Loan Associations."

One who makes a contract in behalf of a voluntary association is personally liable there-

association. — Detroit First Michigan Indepe 934.

Right of voluntary as tract price of services defeated by action of r titled to aliquot parts compensation, in appea ing that they relinquis troit Light Guard Band dependent Infantry (Mic

Comp. Laws, § 10,0 against voluntary associ mulative remedy, and d against the association ly.—Detroit Light Guard gan Independent Infant

ASSUMPSIT.

See "Account Stated"; "Work and Labor."

Amendment of pleadings, For services in moving lo ging."

ASSUMP

Of risk by employé, see § 5.

ATTACH

See "Execution"; "Garn tion."

Exemptions, see "Exemp Of property fraudulently ulent Conveyances," §

§ 1. Property subje The creditor of the ow to a third person, requi proceeds on the sale ther proceeds deposited by bank in his own name a of the third person.—P 870.

ATTORNEY A

Advice of counsel as def imprisonment, see "Fa Advice of counsel as de licious prosecution, s tion," § 1.
Argument and conduct civil actions, see "Tri
Argument and conduct criminal prosecutions § 11.
Attorney's fees on appe § 5.
Attorneys in fact, see
Compensation of attorr see "Counties," § 2.
Counsel for prosecutio "Criminal Law," § 1
Liability of city attorne ery."

AUCTIONS AND

In an action to reco horse, on the ground at an auction sale, in tations of the auction v. Skocpol (Neb.) 102

AUTHEN

Of bill of exceptions, § 13.

Digitized by Google

AUTHORITY.

Of agent, see "Principal and Agent," §§ 1, 2.
Of broker, see "Brokers," §§ 1, 4.
Of corporate officers, see "Corporations," § 6.
Of justices of the peace, see "Justices of the Peace," § 2.
Of officer, see "Officers," § 1.

AVOIDANCE.

Of contract of infant, see "Infants," § 1.

BAILMENT.

See "Banks and Banking," § 2; "Carriers," § 1; "Depositaries"; "Warehousemen."

BANKRUPTCY.

See "Assignments for Benefit of Creditors."

§ 1. Assignment, administration, and distribution of bankrupt's estate.

A conveyance of real estate by a wife to her husband, shortly after he had been adjudged a bankrupt, *held* fraudulent as to the wife's creditors.—Breschemier v. Houston (Iowa) 756.

Where a secured creditor of a bankrupt, whose security is insufficient, discloses his security in proving his claim, he may retain it and share in the dividends as to the overplus.—Kohout v. Chaloupka (Neb.) 173.

The petition of a trustee in bankruptcy to be substituted as party plaintiff in a creditors' bill filed by a creditor of the bankrupt *held* insufficient to entitle the trustee to intervene.—Kohout v. Chaloupka (Neb.) 173.

Interest of a bankrupt in a pending action, which he might sell and assign, *held* property, within Bankr. Act July 1, 1898, c. 541, § 70, subd. 5, 30 Stat. 566 [U. S. Comp. St. 1901, p. 3451], and not a right of action, under subdivision 6.—Cleland v. Anderson (Neb.) 212.

The creditor of an assignee of an insolvent, by filing his claims in bankruptcy proceedings afterwards brought by the assignor, *held* not to lose his right to proceed therefor against the assignee and the sureties on his bond.—Ringenoldus v. Abresch (Wis.) 817.

§ 2. Rights, remedies, and discharge of bankrupt.

To revive a debt discharged in bankruptcy, a conditional promise to pay in installments must be accepted by the creditor.—International Harvester Co. v. Lyman (Minn.) 87.

Where, after discharge in bankruptcy on an offer by the debtor to pay the original obligation in installments, the creditor insists on payment of the whole amount, the debt is not revived.—International Harvester Co. v. Lyman (Minn.) 87.

BANKS AND BANKING.

§ 1. Banking corporations and associations.

The holder of a preferred claim against an insolvent bank *held* not entitled to have the same paid from a fund derived from a double liability assessment on stockholders, under Code, §§ 1882, 1883, to the exclusion of other creditors.—Sioux City Stockyards Co. v. Fribourg (Iowa) 747.

An order establishing a preferred claim against the assets of an insolvent bank *held* not to entitle the creditor to a preference in payment of a stockholders' liability fund subsequently accumulated.—Sioux City Stockyards Co. v. Fribourg (Iowa) 747.

subject to a preferred claim, were applied to recover a stockholders' double liability assessment, such claim was entitled to a preference from the fund recovered to the extent that the general assets were so used.—Sioux City Stockyards Co. v. Fribourg (Iowa) 747.

Comp. Laws, § 8553, providing for a cumulative voting plan for corporate directors, in so far as it applied to banks organized under Banking Law 1887, *held* repealed by Comp. Laws, §§ 6101, 6153.—Attorney General v. Bridgman (Mich.) 438.

Answer in action on note by insolvent bank, which fails to allege that the stockholders, on whose petition the assets were turned over to a trustee, were a majority of the stockholders, as required by Laws 1895, pp. 91, 92, c. 8, §§ 34, 35, to authorize such appointment of a trustee, *held* insufficient to show a legal appointment of such trustee, and a vesting in him of the right to sue and recover assets.—Omaha Sav. Bank v. Rosewater (Neb.) 68.

Where the assets of an insolvent bank were, on petition of its stockholders, turned over to the trustee, if such act was illegal, because a sufficient number of stockholders had not petitioned therefor, any ratification thereof by the stockholders must be shown in the record in a suit by trustee.—Omaha Sav. Bank v. Rosewater (Neb.) 68.

Under Comp. St. 1901, c. 8, § 35, providing for the delivery of the assets of an insolvent bank to the officers or owners furnishing a bond, a delivery to one of several parties entitled thereto does not relieve the sureties on the bond.—Taylor v. Weckerly (Neb.) 618.

On the appointment of a receiver for an insolvent bank, the title of a note secured by mortgage owned by the bank passed to the receiver and to a purchaser from him.—Brynjolfson v. Osthus (N. D.) 261.

A warranty deed of mortgaged land, executed by the president of a bank before its insolvency, but delivered afterwards, and after appointment of a receiver, *held* not an equitable assignment of the mortgage.—Brynjolfson v. Osthus (N. D.) 261.

§ 2. Functions and dealings.

The holder of an unaccepted check may sue thereon in his own name.—Bloom v. Winthrop State Bank (Iowa) 733.

Pleadings in an action against a bank by the holder of an unaccepted check *held* to entitle plaintiff to submit evidence of an agreement between the bank and the drawer as to his deposit.—Bloom v. Winthrop State Bank (Iowa) 733.

Pleadings in an action against a drawer by the holder of an unaccepted check *held* to show a good cause of action.—Bloom v. Winthrop State Bank (Iowa) 733.

Evidence *held* admissible to establish an alleged parol agreement.—Bloom v. Winthrop State Bank (Iowa) 733.

Liability of a bank which pays a draft to the holder, supposing him to be the intended payee, though he is in fact an impostor, determined.—Hoffman v. American Exch. Nat. Bank (Neb.) 112.

In an action against a bank by a depositor, evidence *held* to require judgment for defendant.—Bank of Salem v. Shrimpton (Neb.) 1002.

BAR.

Of action by former adjudication, see "Judgment," § 8.
Of dower, see "Dower," § 1.

Digitized by Google

BASTARDS.

§ 1. Proceedings under bastardy laws.
Evidence in bastardy *held* sufficient to sustain a verdict of guilty.—Guthrie v. State (Neb.) 243.

BATTERY.

See "Assault and Battery."

BENEFICIAL ASSOCIATIONS.

Building or loan associations, see "Building and Loan Associations."

Relatives of a member of a beneficial association *held* not entitled to recover monument benefits, without proof of a compliance with the conditions of the policy.—Sleight v. Supreme Council of Mystic Toilers (Iowa) 1100.

An action to recover monument benefits under a benefit certificate before six months from the member's death *held* premature.—Sleight v. Supreme Council of Mystic Toilers (Iowa) 1100.

In the absence of an allegation that plaintiffs were next of kin or had had charge of the burial of a member of a beneficial association, a funeral benefit payable to the next of kin or person having charge of the burial was not recoverable.—Sleight v. Supreme Council of Mystic Toilers (Iowa) 1100.

BENEFITS.

See "Beneficial Associations"; "Insurance," § 11.

BEQUESTS.

See "Wills."

BEST AND SECONDARY EVIDENCE.

In civil actions, see "Evidence," § 3½.
In criminal prosecutions, see "Criminal Law," § 4.

BETTING.

See "Gaming."

BIAS.

Of grand juror, see "Grand Jury."
Of juror, see "Jury," § 1.
Of witness, see "Witnesses," § 4.

BILL OF EXCEPTIONS.

See "Exceptions, Bill of."

BILLS AND NOTES.

Execution of by corporate officer, see "Corporations," § 6.
Failure of consideration of note for goods sold, see "Sales," §§ 7, 8.
Failure of consideration of note for purchase of realty, see "Vendor and Purchaser," § 5.

§ 1. Requisites and validity.
A check delivered by decedent to his housekeeper prior to his death *held* based on a sufficient consideration and enforceable against his estate.—Clay v. Layton (Mich.) 458.

A moral obligation to pay a pre-existing legal obligation *held* a sufficient consideration for a note.—Fourth Nat. Bank v. Craig (Neb.) 185.

§ 2. Construction and operation.
A duebill draws interest from the day of its date.—Bennett's Estate v. Taylor (Neb.) 669.

A note and mortgage, together, will be constru dine v. Moore (Neb.) 10

A note in the hands of of debt, even after ma Bros. & Co. (Neb.) 1037.

§ 3. Modification, re sion.
Writings *held* not to c for extension of time for Travis v. Watson (Mich.)

§ 4. Rights and liab ment or transf
Rights of purchaser o determined.—Hoffman v. Bank (Neb.) 112.

The indorsee of a note b notice of defense as coll bona fide holder.—Lashme

Where a note and mor of the mortgage, are so chaser is chargeable wit tents of the papers.—C (Neb.) 1021.

The maker of a nonneg no notice of a transfer payment to the original Moore (Neb.) 1021.

§ 5. Payment and di
Payment of a series of office of a private banker, the bankers did not hav *held* insufficient to discha man v. Wagner (Neb.) 41

§ 6. Actions.
In an action on a check, for plaintiff is sustained —Brown v. Roberts (Minn.

A partial want or partia tion can be shown as a de action on a note in the payee.—Brown v. Roberts

In an action on a note to sufficiently show title Life & Trust Co. v. Giff

Evidence in action for b *held* to sustain verdict for Sawmill Co. v. Patrick (

Evidence in action on sustain judgment for Modisett (Neb.) 338.

Action by the payee a notes *held* barred by lache ner (Neb.) 412.

The introduction in evid note properly indorsed es his ownership thereof.—B (N. D.) 261.

Evidence in an action b an indorser examined, an a defense of fraud in pr ment.—Nelson v. Grondahl

BONA FIDE PU

Of bill of exchange or "Bills and Notes," § 4.
Of land, see "Vendor and
Of municipal bonds, see tions," § 13.

BOND

County bonds, see "Counti
Investment of school dist see "Schools and School
Municipal bonds, see "Mu § 13.
Of liquor dealers, see "L § 1.

Digitized by Google

School district bonds, see "Schools and School Districts," § 1.
Special laws, see "Statutes," § 1.
State bonds, see "States," § 1.
Sureties on bonds, see "Principal and Surety."
Township bonds, see "Towns," § 1.

Bonds for performance of duties of trust or office.

See "Assignments for Benefit of Creditors," § 3.

Bonds in legal proceedings.

See "Appeal and Error," §§ 12, 32; "Costs," § 2; "Garnishment," § 3; "Injunction," § 5.

BOOKS OF ACCOUNT.

Admissibility in evidence, see "Evidence," § 8.

BOUNDARIES.

See "Municipal Corporations," § 1.

§ 1. Description.

The existence of a fence for a long time marking the dividing line of platted lots *held* better evidence of the true division line than computation of surveyors on the supposition that all the lots were of like proportion.—Kennedy v. Niles (Iowa) 772.

§ 2. Evidence, ascertainment, and establishment.

Occupancy for the statutory period of limitations up to a division line, marked by a fence, without question of its correctness, *held* acquiescence therein.—Kennedy v. Niles (Iowa) 772.

Mere objection by defendant to plaintiff's erection of his house close to hers is enough to avoid the charge of acquiescence in such erection.—Kennedy v. Niles (Iowa) 772.

In a suit as to the division line between the parties, a third person is not a necessary party, merely because the division line between him and one of the parties is incidentally involved.—Kennedy v. Niles (Iowa) 772.

On an issue whether the eastern line of a certain warehouse was the eastern boundary of the lot on which it stood, evidence *held* to show that it was not the boundary.—Anderson v. Wirth (Mich.) 926.

BREACH.

Of condition, see "Insurance," §§ 5, 6.
Of contract, see "Contracts," § 4; "Vendor and Purchaser," § 3.
Of contract by city, see "Municipal Corporations," § 7.
Of covenant, see "Covenants," § 2; "Insurance," § 6.
Of warranty, see "Insurance," §§ 5, 6; "Sales," §§ 6, 8.

BREACH OF MARRIAGE PROMISE.

Where, on an agreement of marriage, the parties expressly agree that the ceremony shall be celebrated under the rules of a particular religion, such rules become a part of the contract.—Waneck v. Kratky (Neb.) 651.

Where one of the parties to a marriage contract fails to perform his agreement at the time fixed, no reasonable excuse existing, the other party may rescind the contract and sue for damages.—Waneck v. Kratky (Neb.) 651.

BRIBERY.

Admissibility of evidence of acts and declarations of conspirators, see "Criminal Law," § 8.
Admissibility of evidence of other offenses, see "Criminal Law," § 6.

In a prosecution of a city attorney for accepting a bribe to give an opinion to the city council favorable to the granting of a certain contract by the city, evidence considered, and *held* sufficient to justify a verdict of guilty.—People v. Salsbury (Mich.) 936.

An indictment of a city attorney for accepting a bribe, contrary to Comp. Laws, § 11,312, *held* not defective because alleging defendant to be a judicial officer.—People v. Salsbury (Mich.) 936.

A city attorney is an executive or judicial officer, within Comp. Laws, § 11,312, punishing the receiving of bribes by such officers.—People v. Salsbury (Mich.) 936.

In an action for receiving bribes by the hands of an agent instruction as to agency *held* not erroneous.—State v. Ames (Minn.) 330.

On trial of an indictment for receiving a bribe while superintendent of the police department of the city, under an agreement to protect the person furnishing the bribe in an unlawful occupation, evidence *held* sufficient to show that the person to whom the money was paid was acting for and in behalf of the defendant.—State v. Ames (Minn.) 330.

Evidence in an action against a chief of police for receiving bribes in connection with his office *held* to sustain conviction.—State v. Ames (Minn.) 330.

BRIDGES.

§ 1. Establishment, construction, and maintenance.

A county board at an adjourned meeting *held* authorized to act on a new petition for the construction of a bridge partly in two townships after at its regular session refusing a petition for the same purpose.—Board of Sup'rs of Ionia County v. Ionia Circuit Judge (Mich.) 497.

Pub. Acts 1889, No. 62 (Comp. Laws, §§ 4051–4056), relating to bridges partly in two townships, *held* not in conflict with Const. art. 10, § 9, relating to the authority of county boards to borrow or raise by taxation money for bridges.—Board of Sup'rs of Ionia County v. Ionia Circuit Judge (Mich.) 497.

Miller's Comp. Laws, § 4131, relating to bridges in townships, *held* to constitute no restriction on the power conferred by Pub. Acts 1889, No. 62 (Comp. Laws, §§ 4051–4056), relating to the construction of bridges partly in two townships.—Board of Sup'rs of Ionia County v. Ionia Circuit Judge (Mich.) 497.

The adoption of plans and specifications is a necessary preliminary to letting the contract for the building of bridges, under Comp. St. 1901, c. 78, § 83.—Clark v. Lancaster County (Neb.) 593.

There is no authority for the letting of annual contracts by the county board for repairing of bridges, or for repairs under an annual contract, where the amount exceeds $100.—Clark v. Lancaster County (Neb.) 593.

Comp. St. 1901, c. 78, § 83, gives no authority to the county board to take into account the levy of the current calendar year prior to the making of such levy in letting contracts for bridges.—Clark v. Lancaster County (Neb.) 593.

BRIEFS.

Expenses of briefs on appeal as costs, see "Costs," § 5.
On appeal or writ of error, see "Appeal and Error," § 20.

BROKERS.

See "Principal and Agent."
Construction and operation of findings relating to right to commission, see "Trial," § 11.

Digitized by Google

voked.—Hunn v. Ashton (Iowa) 745.

An agreement between an owner of real estate and an agent *held* not to constitute the latter an agent with authority to procure a purchaser of certain property.—Hunn v. Ashton (Iowa) 745.

A sale of land listed with several brokers by the owner himself *held* to terminate the agency of such brokers, without notice of the sale.—White & Hoskins v. Benton (Iowa) 876.

§ 2. Compensation and lien.

A conversation had between an owner of land and one of his brokers, having the same for sale, *held* not to give such broker an exclusive agency for a particular term.—White & Hoskins v. Benton (Iowa) 876.

Conversation had between an owner of land and a broker, authorized to sell the same, *held* not to constitute an agreement suspending defendant's right to sell the same himself, and relieve himself from liability for commissions.—White & Hoskins v. Benton (Iowa) 876.

A real estate agent *held* not entitled to charge a prospective buyer for taking him to see the property.--Hale v. Knapp (Mich.) 1060.

§ 3. Actions for compensation.

In an action by real estate agent to recover commissions, evidence as to the employment by defendant of other agents to sell the land *held* admissible, in view of defendant's denial of plaintiff's agency.—Hunn v. Ashton (Iowa) 745.

Evidence in an action by a real estate agent to recover commissions for a sale of real estate *held* insufficient to support the claim that the sale was made by the agent, or that he was the inducing cause thereof.—Hunn v. Ashton (Iowa) 745.

A judgment for plaintiff on a declaration for commissions on sale of real estate *held* not supported by evidence of a sale by another and an agreement by defendant to pay plaintiff commissions if such a sale should be effected by any one.—Jones v. Pendleton (Mich.) 574.

In an action for broker's commissions, a part of a conversation had between plaintiff and defendant *held* admissible.—Richardson v. Babcock (Wis.) 554.

§ 4. Rights, powers, and liabilities as to third persons.

An agent employed to sell land *held* to have exceeded his authority in agreeing to accept part cash and the remainder at a deferred date.—Staten v. Hammer (Iowa) 964.

Where the value of land sold by an agent without authority materially advances, such advance furnishes ground for refusal to ratify the unauthorized sale.—Staten v. Hammer (Iowa) 964.

BUILDING AND LOAN ASSOCIATIONS.

Liability of foreign building association for taking usury, see "Usury," § 2.

Rule for computation of amount due on building and loan association loan, under Code, § 1898, stated.—Bacon v. Iowa Savings & Loan Ass'n (Iowa) 977.

BUILDINGS.

Building contracts, see "Contracts," § 2.

BURDEN OF PROOF.

Instructions as to, see "Criminal Law," § 15.

and Information," § 5.

§ 1. Prosecution and punishment.

A conviction for entering a railroad car with intent to steal will be sustained against the objection that the evidence is insufficient to show burglary.—State v. Tough (N. D.) 1025.

On trial for burglary with intent to steal, where the evidence is conflicting, it is error to refuse an instruction for defendant fairly presenting the law on the theory of the defense.—State v. Tough (N. D.) 1025.

Accused, who was charged with breaking and entering a railroad car with intent to steal, under Rev. Code 1899, § 7406, *held* entitled to an instruction as to the statutory definition of larceny.—State v. Tough (N. D.) 1025.

BY-LAWS.

Of corporations in general, see "Corporations," § 2.

Of insurance company as part of contract, see "Insurance," § 3.

CANCELLATION OF INSTRUMENTS.

See "Quieting Title"; "Reformation of Instruments."

Rescission of contract, see "Contracts," § 3; "Sales," § 3; "Vendor and Purchaser," § 2.

Setting aside fraudulent conveyances, see "Fraudulent Conveyances," § 3.

CARNAL KNOWLEDGE.

See "Rape."

CARRIERS.

Wrongful conversion by, see "Trover and Conversion," § 1.

§ 1. Carriage of goods.

In an action against a connecting carrier for failure to promptly deliver a shipment of goods, the carrier *held* justified in refusing to deliver the goods.—Schlichting v. Chicago, R. I. & P. Ry. Co. (Iowa) 959.

Where no bills of lading are issued, the carrier is justified in delivering the goods to the consignee without the production of receipts or other evidences of ownership issued to the consignor.—Schlichting v. Chicago, R. I. & P. Ry. Co. (Iowa) 959.

A shipper of goods, who informed the connecting carrier that he held bills of lading for the goods, was estopped from disputing the fact.—Schlichting v. Chicago, R. I. & P. Ry. Co. (Iowa) 959.

The reasonableness of regulations of a carrier for the reception and classification of freight is a question of law for the court.—Chicago, R. I. & P. Ry. Co. v. Colby (Neb.) 145.

A common carrier may make reasonable rules and regulations for the reception, carriage, and delivery of freight.—Chicago, R. I. & P. Ry. Co. v. Colby (Neb.) 145.

§ 2. Carriage of passengers.

Where defendant led the way to an elevator in his store, and plaintiff, believing this an invitation to enter, stepped forward and fell into the shaft, the fact that it was light enough for him to see that the elevator was not in the shaft, had he looked, did not preclude recovery.—Burgess v. Stowe (Mich.) 29.

In an action for injuries from stepping into an open elevator shaft, *held*, that it was for the jury to say whether defendant was negligent

Digitized by Google

not erroneous, in view of others given.—Burgess v. Stowe (Mich.) 29.

Evidence in an action for personal injuries from falling into an elevator shaft in defendant's store, examined, and *held*, that the questions of negligence of the defendant and contributory negligence of the plaintiff were for the jury.—Burgess v. Stowe (Mich.) 29.

The owner of a building, having a passenger elevator, in operating it, is only bound to use the care required of an ordinarily prudent person under the circumstances.—Burgess v. Stowe (Mich.) 29.

In action by a passenger for injuries sustained by reason of the car running through an open switch, evidence *held* sufficient to require the submission to the jury of the question of defendant's negligence as alleged in the declaration.—Leslie v. Jackson & S. Traction Co. (Mich.) 580.

As between the conductor of a railway train and a passenger, the latter must produce ticket apparently good on its face or pay cash fare.—Brown v. Rapid Ry. Co. (Mich.) 925.

In an action for injuries to a passenger by derailment of a street car, evidence *held* to justify a finding that the derailment was caused by the negligent rate of speed of the car and the permitting of crushed rock to remain on the track, as alleged in the complaint.—Smith v. Milwaukee Electric Ry. & Light Co. (Wis.) 823.

CASE ON APPEAL.

Making and settlement, see "Appeal and Error," § 13.

CATTLE.

See "Animals."

CAUSE OF ACTION.

See "Action"; "Malicious Prosecution," § 1.

CERTAINTY.

Of contract essential to specific performance, see "Specific Performance," § 1.

CERTIFICATE.

Certified copies, see "Evidence," § 8.
Of record for purpose of review, see "Appeal and Error," § 13.
Tax certificate, see "Taxation," § 5.

CERTIORARI.

§ 1. Proceedings and determination.
In certiorari, the objection that the officer allowing the writ had no authority so to do can be raised only by motion to dismiss, and not by the return.—Tweddle v. Judge of Superior Court of Grand Rapids (Mich.) 22.

CHALLENGE.

To grand juror, see "Grand Jury."
To juror, see "Jury," § 1.

CHAMPERTY AND MAINTENANCE.

In an action to determine adverse claims to real estate on a trial de novo under Rev. Codes, § 5630, evidence examined, and *held*, that the deeds upon which plaintiff relies to establish his

The grantee under a deed which is invalid under Rev. Codes, § 7002, cannot sue in his own name the adverse claimant, but an action may be maintained against such claimant in the name of the grantor for the grantee's use.—Galbraith v. Paine (N. D.) 258.

A deed executed in violation of Rev. Codes, § 7002, is void only as to the party in adverse possession claiming title, but is valid as between the grantor and grantee and all other persons.—Galbraith v. Paine (N. D.) 258.

The common-law doctrine which condemns as void a grant of land adversely held under claim of title by a grantor who has not been in possession or taken rent for a year prior thereto, as an act of maintenance, was not abolished by the Revised Codes of 1895.—Galbraith v. Paine (N. D.) 258.

CHANCERY.

See "Equity."

CHANGE OF POSSESSION.

Necessity as against creditors of grantor, see "Fraudulent Conveyances," § 1.

CHARACTER.

Instructions as to, see "Criminal Law," § 15.
Of accused in criminal prosecutions, see "Criminal Law," § 6.
Of witness, see "Witnesses," § 4.
Relevancy of evidence, see "Evidence," § 3.

CHARGE.

By carrier, see "Carriers," § 1.
To jury in civil actions, see "Trial," §§ 5–10.
To jury, in criminal prosecutions, see "Criminal Law," § 15.

CHARITIES.

§ 1. Creation, existence, and validity.
Where a charitable trust of the assets of a volunteer fire department was invalid, and the corporation had ceased to exist, the trust res should be distributed among the existing members of the corporation.—Hopkins v. Crossley (Mich.) 499.

A charitable trust of the assets of an incorporated volunteer fire department *held* invalid.—Hopkins v. Crossley (Mich.) 499.

CHATTEL MORTGAGES.

Conclusiveness of judgment as against mortgagee, see "Judgment," § 9.

§ 1. Requisites and validity.
A description in a chattel mortgage of certain chattels located on a particular section of land, "and in other places in said county," *held* insufficient to cover chattels not located on such section.—Farmers' & Merchants' Bank v. Stockdale (Iowa) 732.

A description in a chattel mortgage as "all other personal property" then owned by the mortgagor, or which he might thereafter acquire, *held* not sufficiently specific.—Farmers' & Merchants' Bank v. Stockdale (Iowa) 732.

It is no objection to an agreement to mortgage growing crops that the crops referred to were not in being when it was made.—Sporer v. McDermott (Neb.) 232, 659.

Digitized by Google

§ 2. Construction and operation.

The record of a chattel mortgage acknowledged before a disqualified notary *held* insufficient to impart constructive notice to subsequent purchasers.—Farmers' & Merchants' Bank v. Stockdale (Iowa) 732.

§ 3. Rights and liabilities of parties.

In trover for the value of certain tools alleged to have been converted, the withdrawal of all of the issues, except the question of damages plaintiff was entitled to recover, *held* error.—Lemon v. McBride (Mich.) 453.

In an action for conversion of certain tools, alleged to have been acquired under foreclosure of a chattel mortgage, defendant *held* entitled to show that plaintiff negotiated for a purchase of the tools after the foreclosure and before an alleged tender of the debt.—Lemon v. McBride (Mich.) 453.

In an action by a chattel mortgagee for possession of the mortgaged property, evidence *held* to sustain verdict for defendant.—M. Rumley Co. v. Jelsman (Neb.) 147.

Evidence in an action by a chattel mortgagee for possession of property, in which judgment was rendered for defendant, examined, and *held* insufficient to sustain award of damages to the defendant for wrongful detention.—M. Rumley Co. v. Jelsman (Neb.) 147.

In an action by a chattel mortgagee for possession of mortgaged property, evidence *held* to sustain finding as to the value of the property.—M. Rumley Co. v. Jelsman (Neb.) 147.

Evidence *held* sufficient to show that a chattel mortgagee was in actual possession under its mortgage when attachments were levied on the property as that of the mortgagor.—Taylor v. Harle-Haas Drug Co. (Neb.) 182.

An allegation, in replevin by the mortgagee, of possession under a chattel mortgage by agreement, renders unnecessary any allegation of demand of payment of notes secured by the mortgage to show the mortgagee's right of possession.—Taylor v. Harle-Haas Drug Co. (Neb.) 182.

§ 4. Rights and remedies of creditors.

A covenant in an unrecorded lease for five years, to the effect that the lessee shall on the 15th day of June in each year execute a chattel mortgage on the crops, *held* void as to creditors of the lessee.—Ryan v. Donley (Neb.) 49.

Where mortgage of chattels is not filed at the date of a levy, a purchaser at execution sale against the mortgagor will take free of the mortgage.—Johns v. Kamarad (Neb.) 118.

§ 5. Removal or transfer of property by mortgagor.

Where it was alleged that a sale of certain brick constituted a conversion, but there was evidence that plaintiff mortgagee had consented to the sale, it was error to charge that there was a conversion.—Burroughs v. Butler-Ryan Co. (Iowa) 750.

Consent by a mortgagee to a sale of a portion of the property by the mortgagor *held* not to render the mortgagee liable for breach of the mortgagor's contract.—Burroughs v. Butler-Ryan Co. (Iowa) 750.

In an action for conversion of certain brick, a contract for the sale thereof by the mortgagor *held* admissible to show the mortgagee's knowledge of the sale, though signed by the mortgagor only.—Burroughs v. Butler-Ryan Co. (Iowa) 750.

§ 6. Foreclosure.

Where the parties to a chattel mortgage have stipulated for foreclosure by advertisement, eq-

It is error to refuse an
to a successful foreclosur
gage.—Momrich v. Schwar

CHEA

See "Fraud."

CHECK

See "Bills and Notes."
Payment by bank, see "B
§ 2.

CHILD

See "Bastards"; "Guardia
fants."

CHOSE IN A

Assignment, see "Assignm

CHURC

See "Religious Societies."
Subscriptions to, see "Subs

CITATIO

See "Process."

CITIES

See "Municipal Corporatio

CITIZEN

Equal protection of laws,
Law," § 5.

CIVIL RIGI

See "Constitutional Law,"

CLAIM AND DE

See "Replevin."

CLAIMS

Against county, see "Count
Against estate assigned for
signments for Benefit of
Against estate of bankrupt
§ 1.
Against estate of decedent,
Administrators," § 4.
Against insolvent bank, see
ing," § 1.

CLOUD ON

See "Quieting Title."

CLUBS

See "Associations."

COLLATERAL AG

Parol evidence, see "Evide

COLLATERAL

On appointment of receiver,
§ 7.
On judgment, see "Judgmen

Digitized by Google

See "Taxation," § 9.

COLLATERAL UNDERTAKING.

See "Frauds, Statute of," § 1.

COLLEGES AND UNIVERSITIES.

Mandamus to officer, see "Mandamus," § 2.

An educational incorporation may, under Comp. St. 1901, c. 16, § 172, transfer its assets to a new corporation in no way departing from the original intent and purpose of the old corporation.—McLeod v. Lincoln Medical College of Cotner University (Neb.) 265.

That an educational institution may acquire and convey property necessary to its object, and may charge for tuition, does not render it an incorporation for pecuniary benefit.—McLeod v. Lincoln Medical College of Cotner University (Neb.) 265.

A corporation *held*, within Comp. St. 1901, c. 16, § 15, an educational, and not a business or trading, corporation for the pecuniary benefit of its members.—McLeod v. Lincoln Medical College of Cotner University (Neb.) 265.

A note and mortgage running to a university, trustee for a certain college, *held* valid, though there has been no legal incorporation of the college.—Goddard v. Clarke (Neb.) 350.

The State University is a state institution, and its Board of Regents is an agent of the state.—Von Forel v. State (Neb.) 648.

The state normal school at Valley City is not a school corporation or a legal entity, and the power of its trustee to contract debts is limited by legislative appropriations, and when contracted the debts are those of the state.—State v. McMillan (N. D.) 310.

COLOR OF TITLE.

To sustain adverse possession, see "Adverse Possession."

COMBINATIONS.

See "Conspiracy"; "Monopolies," § 1.

COMITY.

Between courts, see "Courts," § 2.

COMMERCE.

Carriage of goods and passengers, see "Carriers"; "Shipping."

§ 1. Subjects of regulation.

A peddler of teas, coffees, etc., *held* not engaged in interstate commerce, so as to exempt him from liability for peddling without a license, in violation of a city ordinance.—City of Muskegon v. Zeeryp (Mich.) 502.

COMMISSION.

To take testimony, see "Depositions."

COMMISSIONS.

Of broker, see "Brokers," § 2.
Of receiver, see "Receivers," § 4.

COMMITMENT.

For contempt, see "Contempt," § 1.

See "Carriers."

COMMON LAW.

Common-law remainders, see "Wills," § 5.

COMMON SCHOOLS.

See "Schools and School Districts," § 1.

COMPENSATION.

For driving logs, see "Logs and Logging."
For improvements, see "Improvements."
For property taken for public use, see "Eminent Domain," § 2.
For services, see "Master and Servant," § 2.
Of agent, see "Principal and Agent," § 1.
Of attorney employed by county, see "Counties," § 2.
Of broker, see "Brokers," § 2.
Of county officers, see "Counties," § 1.
Of guardian, see "Guardian and Ward," § 5.
Of public officers, mandamus to compel payment, see "Mandamus," § 2.
Of receiver, see "Receivers," § 4.

COMPETENCY.

Of evidence in criminal prosecutions, see "Criminal Law," § 4.
Of experts as witnesses, see "Evidence," § 12.
Of juror, see "Jury," § 1.
Of witnesses in general, see "Witnesses," § 2.

COMPLAINT.

In criminal prosecutions, see "Indictment and Information."

COMPOSITIONS WITH CREDITORS.

See "Compromise and Settlement."

COMPROMISE AND SETTLEMENT.

See "Payment"; "Release."
Admissions as evidence, see "Evidence," § 5.

In an action for breach of contract, *held*, that a certain payment had not amounted to a settlement of the claim in suit.—Marr v. Burlington, C. R. & N. Ry. Co. (Iowa) 716.

COMPUTATION.

Of period of limitation, see "Limitation of Actions," § 1.

CONCEALMENT.

Effect on limitation, see "Limitation of Actions," § 1.

CONCLUSION.

Of witness, see "Evidence," § 10.
Pleading conclusions, see "Pleading," § 1.

CONCURRENT JURISDICTION.

Of courts, see "Courts," § 2.

CONDEMNATION.

Taking property for public use, see "Eminent Domain."

See "Sales," § 9.

CONDITIONS.

In insurance policies, see "Insurance," §§ 5, 6.
In mortgages, see "Mortgages," § 5.
Precedent to action for death, see "Death," § 1.
Precedent to creditors' suit, see "Creditors' Suit."
Precedent to replevin proceedings, see "Replevin," § 1.

CONFIDENTIAL RELATIONS.

Of parties to contract or conveyance, see "Fraudulent Conveyances," § 1.

CONFIRMATION.

Of appointment of testamentary guardian, see "Guardian and Ward," § 1.
Of foreclosure sale, see "Mortgages," § 10.
Of report of referee, see "Reference," § 2.

CONFLICT OF LAWS.

See "Contracts," § 2.
As to construction of mortgage, see "Mortgages," § 2.
Conflicting jurisdiction of courts, see "Courts," § 2.

CONSIDERATION.

Of bill of exchange or promissory note, see "Bills and Notes," § 1.
Of contract, see "Contracts," § 1.
Of contract for repair of roads, see "Highways," § 2.
Of deed to wife, see "Husband and Wife," § 1.
Of fraudulent conveyance, see "Fraudulent Conveyances," § 1.
Of note for goods sold, see "Sales," §§ 7, 8.
Of release, see "Release," § 1.
Parol evidence, see "Evidence," § 9.

CONSPIRACY.

Combinations to monopolize trade, see "Monopolies," § 1.
Evidence of acts and declarations of conspirators, see "Criminal Law," § 8.

§ 1. Civil liability.

Facts *held* not to show any right to relief in judgment creditor against alleged conspiracy to defeat the collection of judgment.—Bitzer v. Washburn (Iowa) 978.

A conspiracy to defeat the collection of a judgment by lawful means is not actionable.—Bitzer v. Washburn (Iowa) 978.

CONSTITUTION.

Of insurance company, see "Insurance," §§ 3, 11.

CONSTITUTIONAL LAW.

Provisions relating to particular subjects.

See "Bridges," § 1; "Eminent Domain," § 1; "Forcible Entry and Detainer," § 1; "Schools and School Districts," § 1; "States," § 1; "Towns," § 1.
Election of judges, see "Judges," § 1.
Special or local laws, see "Statutes," § 1.
Subjects and titles of statutes, see "Statutes," § 2.

Where, on appeal from confirmation in foreclosure, certain sections of the Code providing for appraisal are challenged as unconstitutional, and the determination of the questions cannot avail appellants, the validity of the sections will not be determined.—Green v. Doerwald (Neb.) 634.

An election provided by the Constitution may be held at the required time without special legislation providing therefor.—State v. Moores (Neb.) 1011.

§ 2. Distribution of governmental powers and functions.

Under Code, §§ 1312, 1313, 1350, 1360, section 1320, relating to taxation of property in the possession of an agent, *held* applicable only to the case of an agent having possession of property belonging to a nonresident of the state.—German Trust Co. v. Board of Equalization (Iowa) 878; Same v. City of Davenport, Id.

§ 3. Personal, civil, and political rights.

Ordinance making it unlawful to distribute handbills or circulars in the public streets is not in violation of Const. art. 1, § 5, providing for freedom of speech.—Anderson v. State (Neb.) 149.

The constitution and by-laws of a mutual benefit society, organized for the sole benefit of practical Roman Catholics, *held* not contrary to Const. art. 1, §§ 18, 19.—Barry v. Order of Catholic Knights of Wisconsin (Wis.) 797.

Rev. St. 1898, § 2931, providing that costs adjudged against an infant may be enforced against his guardian ad litem by attachment, *held* not in violation of Const. art. 1, § 16, prohibiting imprisonment for debt.—Burbach v. Milwaukee Electric Ry. & Light Co. (Wis.) 829.

§ 4. Obligation of contracts.

Amendment of Rev. Codes 1899, § 1474, after issue of twenty-year drainage bonds, *held* ineffectual to destroy purchaser's right or to abrogate the authority of the commissioners to issue and deliver them according to contract.—May v. Cass County (N. D.) 292.

§ 5. Equal protection of laws.

Code, § 1320, making agents having the possession of property belonging to another liable for the taxes, *held* not unconstitutional, as depriving the agent of his property without due process of law, and as denying to him the equal protection of the law.—German Trust Co. v. Board of Equalization (Iowa) 878; Same v. City of Davenport, Id.

Code, § 1320, making an agent holding notes or securities personally liable for taxes thereon, *held* not unconstitutional, as a denial of the equal protection of the law.—Heinz v. Board of Equalization of City of Davenport (Iowa) 967.

Rev. St. 1898, § 2931, rendering guardians ad litem personally liable for costs, *held* not objectionable as denying to them equal protection of the laws.—Burbach v. Milwaukee Electric Ry. & Light Co. (Wis.) 829.

§ 6. Due process of law.

Code, § 1320, making an agent holding notes or securities personally liable for taxes thereon, *held* not unconstitutional, as taking of property without due process of law.—Heinz v. Board of Equalization of City of Davenport (Iowa) 967.

Code, § 5007, is not void because the tax thereby imposed on buildings used in manufacture or sale of cigarettes is declared to be no bar to prosecutions under section 5006, prohibiting the sale of cigarettes.—Hodge v. Muscatine County (Iowa) 968.

Code, § 5007, imposing a tax on buildings used in manufacture or sale of cigarettes, *held* not to deprive an owner, not enga

Digitized by Google

business, or his property without due process.—Hodge v. Muscatine County (Iowa) 968.

Code, § 5007, imposing a tax on the vender of cigarettes and on buildings used in the manufacture or sale thereof, is constitutional, though it is not necessary, under the statute, that a person engaged in the business be present when the assessment is made.—Hodge v. Muscatine County (Iowa) 968.

Code, § 5007, imposing a tax on buildings used in the manufacture or sale of cigarettes, *held* not void on account of the summary method for collection. — Hodge v. Muscatine County (Iowa) 968.

§ 7. Right to justice and remedies for injuries.

The guaranty in the bill of rights that every person shall have a remedy for every injury is not a guaranty of a remedy for every species of injury.—Goddard v. City of Lincoln (Neb.) 273.

CONSTRUCTIVE NOTICE.

See "Notice."

Of defect in street, see "Municipal Corporations," § 12.

CONSTRUCTIVE TRUSTS.

See "Trusts," § 1.

CONTEMPT.

Refusal to produce books before grand jury as contempt, see "Witnesses," § 1.

Violation of injunction, see "Injunction," § 4.

§ 1. Power to punish and proceedings therefor.

Under the express provisions of Comp. Laws 1897, § 1101, the particular circumstances of the offense must be set forth in an order of commitment for contempt of court.—Tweddle v. Judge of Superior Court of Grand Rapids (Mich.) 22.

Orders of the district court in proceedings for contempt are reviewable only by petitions in error.—Thompson v. Nelson (Neb.) 194.

CONTEST.

Of election, see "Elections," § 1.

CONTINGENT REMAINDERS.

Creation, see "Wills," § 5.

CONTINUANCE.

In criminal prosecution, see "Criminal Law," § 10.

In justices' courts, see "Justices of the Peace," § 3.

The refusal of a motion for continuance for surprise, and of a motion to amend the motion for continuance after admission that the witnesses would testify as alleged, was largely in the discretion of the trial court.—Goldstein v. Morgan (Iowa) 897.

An unsworn certificate of a physician that defendant is sick, together with an affidavit of the party, *held* not to indicate abuse of discretion in overruling the motion to continue a foreclosure suit, pending more than two years.—Black v. Webber (Neb.) 606.

CONTRACTS.

Abrogation of distinction between sealed and unsealed instruments, see "Seals."

Agreements within statute of frauds, see "Frauds, Statute of."

Assignment, see "Assignments."

Combinations in restraint of trade, see "Monopolies," § 1.

Damages for breach, see "Damages," § 3.

Impairing obligation, see "Constitutional Law," § 4.

Liquidated damages or penalties, see "Damages," § 2.

Mandamus to review award of contract by public officer, see "Mandamus," § 2.

Operation and effect of, as ground of estoppel, see "Estoppel," § 2.

Operation and effect of champerty, see "Champerty and Maintenance."

Operation and effect of customs or usages, see "Customs and Usages."

Operation and effect of gaming laws, see "Gaming," § 1.

Operation and effect of usury laws, see "Usury," § 1.

Parol or extrinsic evidence, see "Evidence," § 9.

Reformation, see "Reformation of Instruments."

Specific performance, see "Specific Performance."

Subrogation to rights or remedies of creditors, see "Subrogation."

Contracts of particular classes of parties.

See "Corporations," § 6; "Counties," § 2; "Husband and Wife," § 1; "Infants," § 1; "Master and Servant"; "Municipal Corporations," §§ 7, 13; "Schools and School Districts," § 1; "Street Railroads," § 1; "Warehousemen."

Promoters of insurance company, see "Insurance," § 1.

Contracts relating to particular subjects.

See "Bridges," § 1; "Interest"; "Mines and Minerals," § 1; "Public Lands," § 1.

Discovery of property for taxation, see "Taxation," § 2.

Improvement of highway, see "Highways," § 2.

Making bequest or devise, see "Wills," § 2.

Promise of marriage, see "Breach of Marriage Promise."

Water rental, see "Municipal Corporations," § 13.

Particular classes of express contracts.

See "Bills and Notes"; "Covenants"; "Depositaries"; "Indemnity"; "Insurance"; "Partnership"; "Rewards"; "Sales"; "Subscriptions."

Agency, see "Principal and Agent."

Employment, see "Master and Servant."

For sale of realty, see "Vendor and Purchaser."

Leases, see "Landlord and Tenant."

Mutual benefit insurance, see "Insurance," § 11.

Separation agreements, see "Husband and Wife," § 3.

Stipulations in actions, see "Stipulations."

Suretyship, see "Principal and Surety."

Particular classes of implied contracts.

See "Account Stated"; "Money Received"; "Work and Labor."

Particular modes of discharging contracts.

See "Compromise and Settlement"; "Payment"; "Release."

§ 1. Requisites and validity.

A contract whereby a restaurant keeper was to board certain men for a specified time *held* not without consideration.—Marr v. Burlington, C. R. & N. Ry. Co. (Iowa) 716.

In an action against a firm and an executor on a note, that testate for sufficient consideration agreed to pay half the indebtedness of the firm *held* sustained by the evidence.—Pratt v. Fishwild & Williams (Iowa) 1089.

On the question of legality of a contract with defendant by plaintiff corporation, *held* competent to cross-examine plaintiff's president as

Digitized by Google

Where there is dispute and uncertainty as to the intention and knowledge of parties to a contract not illegal on its face, the question should be submitted to the jury.—Detroit Salt Co. v. National Salt Co. (Mich.) 1.

Where one is dealing with one who can neither read nor write, and there is testimony that his signature was obtained by fraud, plaintiff must show by the preponderance of the evidence that defendant fully understood the writing.—Spelts & Klosterman v. Ward (Neb.) 56.

Unless it is shown that injuries or damages resulted or must result from fraudulent representations inducing the making of a contract, they do not constitute a defense thereto.—Nelson v. Grondahl (N. D.) 299.

A contract by an express messenger, relieving a railroad company from liability for personal injuries to him by the ordinary negligence of the railroad's employés, *held* not contrary to public policy.—Peterson v. Chicago & N. W. Ry. Co. (Wis.) 532.

§ 2. Construction and operation.

Building contract construed, and provision as to delays of owner *held* not to apply to extra work which the contractor was required to perform.—Reardon v. Cushing (Minn.) 1126.

Where a contract of sale provided for the note of one other than the purchaser in part payment, such person was not a third party, so as to render the purchaser liable for that part of the consideration which was to be paid by the maker of the note.—Omaha Brewing Ass'n v. Tillenburg (Neb.) 107.

Contracts made by residents with foreign building associations, through agents of such associations located in the state, are Nebraska contracts, governed by the laws of the state.—National Mut. Bldg. & Loan Ass'n v. Retzman (Neb.) 204.

A contract with plaintiffs for the placing of certain advertising cards in railway cars *held* not a sublease of space, but a contract for plaintiffs' personal services, and therefore executory until the time provided by the contract expired.—Ward v. American Health Food Co. (Wis.) 388.

Where a contract for the construction of a certain foundation fixed no time for the completion of the work, the work must be completed within a reasonable time.—Lang v. Menasha Paper Co. (Wis.) 393.

A railroad company *held* entitled to enforce an express messenger's contract exempting the express and transportation companies from liability for injuries to the messenger.—Peterson v. Chicago & N. W. Ry. Co. (Wis.) 532.

In a contract for the drilling of a well, there is no implied warranty on the part of the driller as to the quality or quantity of the water to be obtained.—Butler v. Davis (Wis.) 561.

Plaintiff's opinion as to the time it would take to bore a well for defendant *held* not to give defendant a right to recover for board furnished plaintiff under the contract for the time consumed in excess of that specified.—Butler v. Davis (Wis.) 561.

§ 3. Rescission and abandonment.

One who has a right of rescission of a contract for fraud should make known his rescission as soon as he knows his right to rescind.—Holdrege v. Watson (Neb.) 67.

In an action for breach of an advertising contract, a finding that a letter written by defendants to plaintiffs did not constitute an election

§ 4. Performance or breach.

Notice to remove advertising cards before expiration of time for which their use had been contracted *held* a breach of contract.—Ward v. American Health Food Co. (Wis.) 388.

Defendants *held* entitled to stop further performance of a contract for advertising while the same was executory, and limit their further liability to damages sustained for breach of the contract.—Ward v. American Health Food Co. (Wis.) 388.

§ 5. Actions for breach.

In an action for breach of a contract, *held*, that a contention that plaintiff had disabled herself from executing the contract by going out of business was untenable.—Marr v. Burlington, C. R. & N. Ry. Co. (Iowa) 716.

In an action by a company for damages resulting from a breach of contract, evidence *held* insufficient to warrant the legal conclusion that the agreement was with the officers as individuals.—Anderson Carriage Co. v. Pungs (Mich.) 563.

In an action for damages from a breach of contract, facts *held* to justify the refusal of an instruction that plaintiff was not entitled to recover on the theory that defendant promised to make good the loss sustained by the cancellation of a previous contract.—Anderson Carriage Co. v. Pungs (Mich.) 563.

Evidence in an action for extra work performed by plaintiff in the erection of a building *held* to sustain a verdict for plaintiff.—Reardon v. Cushing (Minn.) 1126.

Evidence in action for breach of contract to sell certain corn at a fixed price *held* to justify judgment for defendant.—Spelts & Klosterman v. Ward (Neb.) 56.

There is no variance between an allegation on a verbal contract and an unsigned memorandum of such contract made by the party charged when the contract was entered into.—Brown v. Silver (Neb.) 281.

Where the contract sued on superseded an old contract between the parties, it was not error to exclude the original contract.—Warder, Bushnell & Glessner Co. v. Myers (Neb.) 992.

In declaring on a contract which is ambiguous, the pleader should point out in what particular he claims the contract to be uncertain.—Johnson v. Kindred State Bank (N. D.) 588.

In an action to recover for breach of a promise to see that a co-tenant should be paid his share of the price of the land, evidence *held* to require a submission of the case to the jury.—Morton v. Smiley (Wis.) 534.

CONTRADICTION.

Of record, see "Appeal and Error," § 17.

CONTRIBUTION.

Promises to contribute, see "Subscriptions."

CONTRIBUTORY NEGLIGENCE.

See "Negligence," § 2.

CONVERSION.

Wrongful conversion of personal property, see "Trover and Conversion."

Digitized by Google

CONVEYANCES.

Contracts to convey, see "Vendor and Purchaser," § 3.
In fraud of creditors, see "Fraudulent Conveyances."
Of insured property, see "Insurance," § 6.
In trust, see "Trusts," § 1.

Conveyances by or to particular classes of parties.

See "Guardian and Ward," § 3; "Husband and Wife," § 1; "Insane Persons," § 2.

Conveyances of particular species of property.

See "Homestead," § 1; "Mines and Minerals," § 1.

Particular classes of conveyances.

See "Assignments"; "Assignments for Benefit of Creditors"; "Chattel Mortgages"; "Deeds"; "Mortgages."

CORPORATIONS.

Quo warranto, see "Quo Warranto."

Particular classes of corporations.

See "Beneficial Associations"; "Building and Loan Associations"; "Colleges and Universities"; "Insurance"; "Municipal Corporations"; "Religious Societies"; "Street Railroads," § 1.
Banks, see "Banks and Banking," § 1.
Telegraph and telephone companies, see "Telegraphs and Telephones," § 1.
Water companies, see "Waters and Water Courses," § 5.

§ 1. Incorporation and organization.

A corporation organized to plant, harvest, store, purchase, manufacture, sell, and deal in chicory, is a manufacturing company within Comp. St. 1901, p. 380, c. 16, § 37.—Bolton v. Nebraska Chicory Co. (Neb.) 148.

The character of a corporation is determined from its articles of incorporation and the statute authorizing its formation.—McLeod v. Lincoln Medical College of Cotner University (Neb.) 265.

§ 2. Corporate name, seal, domicile, by-laws, and records.

By-laws not expressly adopted by the directors will be considered as those of the corporation; the conduct of the directors indicating that they regarded them as such.—Graebner v. Post (Wis.) 783.

The by-laws of a corporation organized to promote just and equitable principles in trade *held* not limited to conduct concerning the corporation or any of its members, but applicable to conduct on the part of members, without regard to place or person concerned therein.—Wood v. Chamber of Commerce of City of Milwaukee (Wis.) 835.

§ 3. Capital, stock, and dividends.

In an action to recover money paid on stock subscription pursuant to agreement with a promoter, it is no defense that plaintiff had not complied with his contract in paying for his stock as assessments were due.—Holliday v. Wright (Mich.) 949.

A stockholder *held* entitled to credit on his unpaid subscription for money advanced by him for an attorney for the corporation; there being no available funds, and his action being ratified by the directors.—Graebner v. Post (Wis.) 783.

The participation of a stockholder as stockholder, director, and president in proceedings making and ratifying calls on stock subscriptions is a waiver of irregularity in the calls and notice thereof, estopping him to object to Post (Wis.) 783.

§ 4. Members and stockholders.

Liability of stockholders of insolvent corporation can be enforced only by a bill in equity for the benefit of all the creditors and against all the stockholders whose subscriptions are unpaid.—Reed v. Burg (Neb.) 414.

In a bill by creditors of an insolvent corporation to subject the unpaid subscriptions to the capital stock of the corporation to the corporate debts, *held* necessary that every delinquent subscriber to such capital stock be made a party.—Fremont Package Mfg. Co. v. Story (Neb.) 416.

A minority of the shareholders cannot call a meeting on their own authority and hold a valid election of officers.—Haskell v. Read (Neb.) 1007.

A court of equity will not prevent the board of directors of a corporation from exercising jurisdiction conferred by the by-laws thereof to try a member charged with violations of the by-laws.—Wood v. Chamber of Commerce of City of Milwaukee (Wis.) 835.

The method prescribed by the by-laws of a corporation for disciplining its members are supreme, unless void for unreasonableness or invalid as contrary to the law of the corporation or to the law of the land.—Wood v. Chamber of Commerce of City of Milwaukee (Wis.) 835.

A board of directors of a corporation, exercising under the by-laws thereof quasi judicial power in examination of charges made against members of the corporation, is not ousted of its jurisdiction to examine charges made against a member merely because the charges were made by one of the directors.—Wood v. Chamber of Commerce of City of Milwaukee (Wis.) 835.

A member of a corporation, charged with a violation of the by-laws thereof, who deems the charges indefinite, *held* entitled only to appeal to the board empowered to try him to have them made specific.—Wood v. Chamber of Commerce of City of Milwaukee (Wis.) 835.

Under the by-laws of a corporation, empowering the board of directors to try charges against members of the corporation, the members of the board of directors *held* not precluded from filing charges against a member.—Wood v. Chamber of Commerce of City of Milwaukee (Wis.) 835.

§ 5. Officers and agents.

An officer of a corporation is not liable personally to third persons for failure to perform some duty which the corporation may have owed them.—Penney v. Bryant (Neb.) 1033.

§ 6. Corporate powers and liabilities.

Under Code, §§ 4019, 4020, where property of a corporation is seized by a deputy sheriff, acting for the mortgagee, a notice presented by an employé does not create a lien on the fund derived from the foreclosure sale.—Wells v. Kelley (Iowa) 1104.

In an action on a note purporting to have been executed by a corporation, evidence *held* not to prove the execution thereof.—Gould v. W. J. Gould & Co. (Mich.) 576.

Where a corporation unlawfully purchases bank stock and receives dividends for a number of years, it is estopped from asserting its acts to be ultra vires, in a suit to recover a stockholder's liability under Laws 1899, p. 315, c. 272, at the suit of a receiver of the bank, which had become insolvent.—Hunt v. Hauser Malting Co. (Minn.) 85.

Where a corporation organized for the manufacture of malt and for the sale of grain purchases bank stock as an investment, its acts are unlawful.—Hunt v. Hauser Malting Co. (Minn.) 85.

Digitized by Google

The burden is on a city, which seeks to enforce a special tax against specific lots of a corporation, to show that the general manager who signed the petition for improvement of street was authorized so to do.—Trephagen v. City of South Omaha (Neb.) 248.

The right to sign the name of a corporation to a petition for the improvement of a city street *held* within the powers of the board of directors.—Trephagen v. City of South Omaha (Neb.) 248.

The authority of the general manager of a stockyard corporation will not authorize him to sign a petition for paving a city street.—Trephagen v. City of South Omaha (Neb.) 248.

§ 7. Insolvency and receivers.

A suit against an insolvent debenture company for the winding up of its affairs and the payment to the debenture holders the amounts paid by them, etc., may be instituted by one or more holders on behalf of all.—Christian v. Michigan Debenture Co. (Mich.) 22.

A suit against an insolvent debenture company may be maintained by holders of debentures not matured.—Christian v. Michigan Debenture Co. (Mich.) 22.

Evidence *held* to show fraud on the part of a debenture company in the sale of debentures.—Christian v. Michigan Debenture Co. (Mich.) 22.

Holders of debentures purchased in good faith from a debenture company *held* entitled to equitable relief, though the company's scheme was fraudulent.—Christian v. Michigan Debenture Co. (Mich.) 22.

An order appointing a receiver, made by a court having jurisdiction of the person and subject-matter, cannot be collaterally attacked.—Brynjolfson v. Osthus (N. D.) 261.

On the appointment of a receiver for an insolvent corporation, the right of possession of its property passes to the receiver as an officer of the court.—Brynjolfson v. Osthus (N. D.) 261.

The appointment of a receiver for an insolvent corporation suspends its right to exercise corporate functions.—Brynjolfson v. Osthus (N. D.) 261.

§ 8. Foreign corporations.

Allegation in the complaint that plaintiff is a duly organized foreign corporation *held* not to make Laws 1899, p. 68, c. 69, relating to foreign corporations doing business in the state, applicable.—National Life & Trust Co. v. Gifford (Minn.) 919.

A foreign corporation may sue in the courts of the state without compliance with Comp. St. c. 16, § 215.—Holt v. Rust-Owen Lumber Co. (Neb.) 613.

CORRECTION.

Of assessment of taxes, see "Taxation," § 2.

COSTS.

Appealability of judgment for costs, see "Appeal and Error," § 3.
Best and secondary evidence of payment of, see "Evidence," § 3½.
Necessity of motion presenting objection to taxation of, for purpose of review, see "Appeal and Error," § 6.
Review of discretion of court in awarding of costs, see "Appeal and Error," § 27.
Statutes making guardian ad litem liable for costs against infant as denial of equal protection of laws, see "Constitutional Law," § 5.
Statutes making guardian ad litem liable for costs against infant, as infraction of civil rights, see "Constitutional Law," § 3.

In actions by or against particular classes of parties.

See "Executors and Administrators," § 5; "Infants," § 2.

In particular actions or proceedings.

See "Quieting Title," § 2.
Foreclosure, see "Mortgages," § 7.
Probate proceedings, see "Wills," § 4.

§ 1. Nature, grounds, and extent of right in general.

Where plaintiff, having cause for complaint, has confused an action to quiet title against a guardian of minors with an action for breach of warranty against defendant, and the pleadings are numerous, each party may be required to pay his copy and witness fees, and defendant may be taxed with all other costs down to the entry of the decree.—Mock v. Chalstrom (Iowa) 909.

§ 2. Security for payment.

Rev. St. 1898, § 986, requiring plaintiff, in an action against any officer and the sureties on his bond, to file security for costs, does not apply to an action on a bond given by an assignee for benefit of creditors.—Ringenoldus v. Abresch (Wis.) 817.

§ 3. Amount, rate, and items.

Mileage for witnesses necessary to make out plaintiff's case was properly taxable as costs, whether they came from within or without the state.—Casley v. Mitchell (Iowa) 725.

Under Rev. Codes 1899, § 5589, giving district courts power to award motion costs in their discretion not to exceed $25, an allowance of $15 upon a denial of a motion to retax costs is not an abuse of discretion.—Crane v. Odegard (N. D.) 326.

That copies of papers served by a sheriff were printed by plaintiff, for whom they were served, *held* no reason why fees therefor should not be taxed as costs.—Williamson v. Lake County (S. D.) 702.

A plaintiff, who has paid to a sheriff fees for the service of process, is entitled to have such fees taxed as costs, though the deputy serving the process was merely a de facto officer.—Williamson v. Lake County (S. D.) 702.

An appellant could not tax items "for stenographer's fees to perfect appeal record," and "for appeal bond."—Elfring v. New Birdsall Co. (S. D.) 703.

Costs are limited to items specified by statute.—Elfring v. New Birdsall Co. (S. D.) 703.

§ 4. Taxation.

Where an action is based on covenants in a deed executed by defendant to plaintiff, no notice to defendant, under Code, § 4226, is necessary as a prerequisite to the taxation of costs against him.—Mock v. Chalstrom (Iowa) 909.

§ 5. On appeal or error, and on new trial or motion therefor.

Under Rev. Codes 1899, § 5575, subd. 5, allowing an attorney's fee, "for argument, $15," the party prevailing on appeal is entitled to recover as part of his costs, in case of a reargument, the same amount for the argument on rehearing as is allowed on the original argument.—Crane v. Odegard (N. D.) 326.

The fact that by leave of court briefs have been served and filed out of time does not defeat the right of the prevailing party to have the cost of printing them taxed as part of his costs and disbursements. — Crane v. Odegard (N. D.) 326.

§ 6. In criminal prosecutions.

Fees of officers and witnesses for services rendered in a prosecution for violation of an ordinance cannot be collected from such city, unless such payment is required by statute or

Digitized by Google

See "Municipal Corporations," § 3.

COUNTIES.

See "Municipal Corporations."

§ 1. Government and officers.

The rule that there must be a finding of fact to support the judgment has no application to orders of the county board.—Lexington Mill & Elevator Co. v. Dawson County (Neb.) 62.

Where the compensation to be allowed an officer is in the discretion of the county commissioners, their action is quasi judicial.—Mitchell v. Clay County (Neb.) 673.

Where the compensation to be allowed an officer is fixed by law, the allowance of the claim by county commissioners is formal only.—Mitchell v. Clay County (Neb.) 673.

A settlement by the county board with a county officer of his accounts *held* not quasi judicial because claims were filed for sums alleged to be due such officer and allowed to enable warrants to be drawn therefor.—Mitchell v. Clay County (Neb.) 673.

Findings of county commissioners, where judicial discretion is called for in the allowance of a claim, can be questioned only by an appeal as provided by statute.—Crouch v. Pyle (Neb.) 1049.

§ 2. Property, contracts, and liabilities.

An attorney, appointed under Code, § 325, to prosecute in proceedings to disbar an attorney, *held* entitled to recover from the county reasonable compensation.—Hyatt v. Hamilton County (Iowa) 855.

The further execution of a contract and the prosecution of any claim against a county for compensation for work already done will not be enjoined, except on condition of the payment of a fair value of the work and material furnished.—Clark v. Lancaster County (Neb.) 593.

Where defendant was proceeding under a lawful contract with the county board, enjoining further proceedings under it on condition of a bond, which is not given, does not deprive the subsequent proceedings of defendant under the contract of good faith and color of lawfulness.—Clark v. Lancaster County (Neb.) 593.

§ 3. Fiscal management, public debt, securities, and taxation.

Under Const. art. 11, § 3, refunding bonds, the proceeds from the sale of which are to be applied to the payment of those outstanding, and which increases the aggregate debt beyond the constitutional limit, are invalid.—Reynolds v. Lyon County (Iowa) 1096.

Where a county used money arising from the sale of bonds issued beyond the constitutional limit in payment of a valid indebtedness, an indebtedness *held* to arise against it out of the sale of the bonds and application of the proceeds.—Reynolds v. Lyon County (Iowa) 1096.

Where an indebtedness arising from the sale and application of the proceeds of refunding bonds to valid claims of the county, with other valid obligations of the county, exceed the constitutional limitation, other refunding bonds issued by the county are invalid.—Reynolds v. Lyon County (Iowa) 1096.

Where, in a suit by a bondholder against a county, the plaintiff claims that the county's obligations are the same as though other evidences of debt had not existed, a contention that a nontaxpayer cannot question the validity of the bonds issued beyond the constitutional limit, passing upon claims against the county whenever their action involves the determination of questions of fact or the exercise of discretion in ascertaining the amount to be allowed.—Mitchell v. Clay County (Neb.) 673.

The action of county commissioners in adjusting the accounts of county officers under Comp. St. 1901, c. 18, art. 1, §§ 43, 44, is ministerial only.—Mitchell v. Clay County (Neb.) 673.

Whenever the course to be pursued by county commissioners in determining a claim against the county is fixed by law, the acts of the county commissioners are ministerial only.—Mitchell v. Clay County (Neb.) 673.

County commissioners, in allowing claims against the county, where the amounts to be allowed are fixed by law, cannot allow an amount in excess of the statutory compensation.—Crouch v. Pyle (Neb.) 1049.

COUNTY BOARD.

See "Counties," § 1.

COUNTY COURTS.

Jurisdiction of action for breach of covenant, see "Covenants," § 3.

COURTS.

Conclusiveness of judgments as between federal and state courts, see "Judgment," § 9.
Contempt of court, see "Contempt."
Judges, see "Judges."
Judicial determination of reasonableness of ordinances, see "Municipal Corporations," § 2.
Justices' courts, see "Justices of the Peace."
Mandamus to inferior courts, see "Mandamus," § 2.
Province of court and jury, see "Trial," §§ 5-10.
Review of decisions, see "Appeal and Error."
Trial by court without jury, see "Trial," § 12.

Jurisdiction of particular actions, proceedings, or subjects.

Against estate of ward, see "Guardian and Ward," § 4.
Determination of liability of heirs for debts of intestate, see "Descent and Distribution," § 3.
For breach of covenant, see "Covenants," § 3.

§ 1. Establishment, organization, and procedure in general.

While a state court is bound by the decisions of the United States Supreme Court as to the powers of national banks, the application of such decisions to a state bank in a case in the state courts is to be determined by the state decisions.—Hunt v. Hauser Malting Co. (Minn.) 85.

Opinions expressed by the Commissioners on matters not essential to the decision do not become the law of the case.—Williams v. Miles (Neb.) 151.

Where opinions are prepared by Commissioners, they may state their reasons in their own way without binding the court.—Williams v. Miles (Neb.) 151.

Where opinions are prepared by Commissioners, all that is said arguendo is not binding on court, though it concurs in the conclusions of law and the express findings of fact.—Modern Woodmen of America v. Coleman (Neb.) 154.

Decisions by the Supreme Court, based on a statute repealed when the decisions were ren-

Digitized by Google

Elfring v. New Birdsall Co. (S. D.) 703.

§ 2. Concurrent and conflicting jurisdiction, and comity.

Under Acts 28th Gen. Assem. p. 6, c. 10, a nonresident of a county, on being sued in the superior court of a city located therein, *held* entitled to a change of venue to the district court of such county.—Woodring v. Rooney (Iowa) 1100.

The circuit court *held* to have jurisdiction of a suit to enjoin enforcement of a void order of the probate court allowing a claim against a ward's estate.—Lothrop v. Duffield (Mich.) 577.

Foreclosure of a chattel mortgage, in which defendant has been restrained from disposing of the property during the pendency of the action, withdraws the property from pursuit by general creditors of the mortgagor.—Ryan v. Donley (Neb.) 234.

A state court has no jurisdiction to determine the validity of homestead entries allowed by the officers of the general government.—Tiernan v. Miller & Leith (Neb.) 661.

COVENANTS.

In insurance policies, see "Insurance," § 6.
In leases, see "Landlord and Tenant," § 3.

§ 1. Construction and operation.

A covenant against incumbrances does not run with the land, and where it is subject to lease the covenant is broken when made.—Brass v. Vandecar (Neb.) 1035.

§ 2. Performance or breach.

A covenant in a deed against incumbrances does not include a charge for a street improvement which has been made, where the lien has not attached.—Cemansky v. Fitch (Iowa) 754.

A covenant in a deed against "liens and incumbrances" is a covenant "in præsenti," and does not relate to those which may thereafter attach.—Cemansky v. Fitch (Iowa) 754.

Where a deed contains a covenant to defend against all "lawful claims," it does not include an assessment for a street improvement, the lien of which has not attached.—Cemansky v. Fitch (Iowa) 754.

An unexpired lease, which prevents a grantee from recovering possession, is an incumbrance.—Brass v. Vandecar (Neb.) 1035.

A covenant against incumbrances is broken when made, if incumbrances exist when the deed is delivered.—Dahl v. Stakke (N. D.) 353.

§ 3. Actions for breach.

The county court has jurisdiction within the statutory limit in actions to recover for breach of covenant against incumbrances.—Brass v. Vandecar (Neb.) 1035.

Where the breach of a covenant consists of an unexpired lease, the measure of damages will be the value of the use of the premises for the time the grantee is deprived of such use.—Brass v. Vandecar (Neb.) 1035.

Where land is conveyed with a covenant against incumbrances, and is subject to an unexpired lease, grantor *held* liable for the expenses in attempting to obtain possession, in addition to the value of the use of the premises.—Brass v. Vandecar (Neb.) 1035.

COVERTURE.

See "Husband and Wife."

CREDIBILITY.

Of witness, see "Witnesses," § 4.
Of witnesses, instructions as to, see "Criminal Law," § 15.

See "Assignments for
"Bankruptcy"; "Credi
lent Conveyances."
Of intestate, see "Desc
§ 3.
Of testator, see "Wills,"
Remedies against surety
Surety," § 2.
Rights and remedies of
and Surety," § 3.
Rights as to chattel mo
"Chattel Mortgages," §
Subrogation to rights of
gation."

CREDITOR

Remedies in cases of fr
see "Fraudulent Conv

Return of a sheriff up
bona *held* a sufficient bas
of a creditors' bill.—Coffie
283.

CRIMINAL

See "Malicious Prosecut
Character of witnesses, s
Conviction of offense inc
see "Indictment and I
Costs in criminal prosecu
Examination of witnesses
Grand jury, see "Grand
Inconsistent statements
nesses," § 4.
Indictment, information,
dictment and Informat
Prisons, see "Prisons."
Refusal of witness to
grand jury as crimina
nesses," § 1.

Offenses by particula

Poor-law officers, see "P

Particular

See "Abortion"; "Adulte
tery," § 2; "Bribery"
tempt"; "Gaming," §
ceny"; "Rape"; "Robbe
Bastardy, see "Bastards,
Violations of municipal
nicipal Corporations,"

§ 1. Parties to offen

A person standing wat
into a freight car *held* a p
not participate in the a
tering.—State v. Berger

Under Code, § 5299, a d
breaking and entering a
tion with another, may b
proof showed that he
abettor.—State v. Berger

That defendant was
breaking and entering a
other did not require th
other's participation in
order to convict defend
(Iowa) 1094.

§ 2. Former jeopard

Under Local Option La
1899, pp. 276, 280, No.
druggist for illegal sales
to a prosecution under (
for perjury in making sta
statute.—Anderson v. Va
(Mich.) 927.

**§ 3. Preliminary co
warrant, exa
ment, and sum**

Where a charge in a c
formation are substantiall

Digitized by Google

On a prosecution for statutory rape, testimony of the female as to her age is not incompetent because of the fact that her father was present in the court room and could have testified to her age.—State v. Scroggs (Iowa) 723.

Evidence obtained by an unlawful search of defendant's house, in violation of Const. art. 1, § 8, *held* inadmissible against him.—State v. Sheridan (Iowa) 730.

On prosecution for adultery, a photograph of defendant's alleged paramour *held* admissible for identification, though the photograph was several years old.—State v. Hasty (Iowa) 1115.

§ 5. —— Facts in issue and relevant to issues, and res gestæ.

Statements by accused to prosecutrix, at the time of the commission of the crime with her, as to his illicit relations with other women, is admissible as res gestæ.—State v. Bebb (Iowa) 714.

In a criminal prosecution, evidence of efforts to bribe one of the state's witnesses *held* properly admitted.—People v. Salsbury (Mich.) 936.

On a prosecution for murder, evidence of statements of accused *held* admissible as a part of the res gestæ.—People v. Quimby (Mich.) 1061.

In a prosecution for rape, evidence of a conversation with a third person in defendant's hearing, at the time defendant gave prosecutrix money, as to the reason therefor, *held* admissible as res gestæ.—State v. Mulch (S. D.) 101.

In a prosecution for assault with intent to kill, a question asked by the court of a medical expert, who had testified as to defendant's insanity, *held* erroneous.—Lowe v. State (Wis.) 417.

§ 6. —— Other offenses, and character of accused.

Where the evidence is circumstantial, proof of good character is not so far defensive as to overcome any inference of guilt to be drawn therefrom.—State v. King (Iowa) 712.

It was error to refuse to permit a witness to state what defendant's character was prior to the assault complained of.—State v. Cather (Iowa) 722.

On a trial for murder by commission of an abortion, it may not be shown that defendant had produced abortions on other women.—State v. Crofford (Iowa) 889.

Evidence of a prior abortion by an unknown person *held* no evidence of defendant's guilt of murder by abortion.—State v. Crofford (Iowa) 889.

In a prosecution for breaking and entering a railroad car, evidence tending to show defendant's previous general criminal character *held* inadmissible.—State v. Berger (Iowa) 1094.

In a prosecution for breaking and entering a railroad car, evidence of a conversation between witness and defendant tending to show him guilty of previous criminal acts *held* inadmissible.—State v. Berger (Iowa) 1094.

On a trial of a mother for the murder of one of her two children by means of poison, evidence indicating the poisoning of both children *held* admissible. — People v. Quimby (Mich.) 1061.

Evidence of the commission of other crimes by defendant is competent if it tends corroboratively or directly to establish his guilt of the crime charged in the indictment, or some essential ingredient thereof. — State v. Ames (Minn.) 330.

similar unlawful occupations was properly received.—State v. Ames (Minn.) 330.

§ 7. —— Admissions, declarations, and hearsay.

On a prosecution for statutory rape, the female was a competent witness as to her own age.—State v. Scroggs (Iowa) 723.

In prosecution for adultery, letters to the father of defendant's alleged paramour, written by strangers residing in a locality where defendant and his paramour were alleged to have lived, *held* admissible. — State v. Hasty (Iowa) 1115.

On a prosecution for murder, an unsigned paper in the handwriting of the accused *held* admissible as an admission.—People v. Quimby (Mich.) 1061.

§ 8. —— Acts and declarations of conspirators and co-defendants.

A conspiracy must be shown by testimony outside the declarations which are sought to be introduced against one as made by a co-conspirator.—State v. Crofford (Iowa) 889.

Only those statements of a conspirator made pending the conspiracy and in furtherance of its unlawful purpose are admissible against his co-conspirator.—State v. Crofford (Iowa) 889.

On a trial for murder by commission of an abortion, evidence that defendant's co-conspirator therein, prior to the conspiracy, asked another physician to commit a prior abortion on the woman, is not admissible.—State v. Crofford (Iowa) 889.

In a criminal prosecution for accepting a bribe, certain evidence as to communications between persons jointly interested in the matter *held* admissible.—People v. Salsbury (Mich.) 936.

Before the acts and declarations of a conspirator can be considered against his associates, the conspiracy itself must be established.—O'Brien v. State (Neb.) 649.

A conspiracy may be established by circumstantial evidence.—O'Brien v. State (Neb.) 649.

Acts and declarations of a conspirator in furtherance of the common purpose are admissible against his associates.—O'Brien v. State (Neb.) 649.

A conspiracy to steal for the benefit of all engaged in the illegal enterprise *held* pending until a sale has been made and the proceeds divided.—O'Brien v. State (Neb.) 649.

§ 9. —— Opinion evidence.

A statement by one accused of larceny that after he received the watch from a stranger some one called the corroborating witness, and he supposed it was an acquaintance, is properly excluded as to the supposition.—State v. King (Iowa) 712.

It was error to refuse to permit witness to state whether or not defendant was intoxicated at a certain time, without stating the facts on which he based his opinion.—State v. Cather (Iowa) 722.

The accused has a right to testify as to the intent with which he committed the alleged criminal act.—State v. Tough (N. D.) 1025.

In a prosecution for assault with intent to kill, a hypothetical question, not based on facts in the record, *held* erroneously allowed.—Lowe v. State (Wis.) 417.

A medical witness *held* to possess the necessary qualifications to entitle him to testify as an expert on insanity in a criminal case.—Lowe v. State (Wis.) 417.

Digitized by Google

fications of a physician to be appointed examiner in lunacy, *held* not to apply to medical witnesses testifying as experts on insanity.—Lowe v. State (Wis.) 417.

Nonexpert witnesses, who were well acquainted with accused, *held* entitled to give their opinion as to his sanity.—Lowe v. State (Wis.) 417.

§ 10. Time of trial and continuance.

On motion for continuance, proof of the sickness of a husband of a witness did not establish her inability to attend, where, for all that appeared, another might have cared for him.—State v. Hasty (Iowa) 1115.

Accused, whose guilt was established by the record, *held* not entitled to continuance for absent witnesses whose testimony was cumulative.—State v. Hasty (Iowa) 1115.

Where a continuance of a prosecution was consented to by defendant, it did not devest the court of jurisdiction of such offense.—Lowe v. State (Wis.) 417.

§ 11. Trial.

On prosecution for adultery, *held* not error to refuse to require the state to elect what transaction it would rely on.—State v. Hasty (Iowa) 1115.

Where letters contained statements constituting competent evidence, and also contained statements of opinion by the writer, it was not error to admit them over an objection to the entire letters.—State v. Hasty (Iowa) 1115.

A statement by attorney for the state that the testimony of an alleged eyewitness of the crime was uncontradicted *held* not a comment on failure of accused to testify.—State v. Hasty (Iowa) 1115.

§ 12. —— Preliminary proceedings.

On a prosecution for rape, a notice of intention to introduce a witness to prove that on the day of accused's arrest he stated he intended to have another person arrested is sufficient to allow testimony by the witness that accused stated there were others guilty besides himself. —State v. Bebb (Iowa) 714.

Under Code, § 5373, as amended by Acts 28th Gen. Assem. p. 95, c. 135, notice that witnesses who testified before the committing magistrate would be called might be served on defendant's attorney, where the officers could not, after due diligence, secure service on defendant.—State v. Hasty (Iowa) 1115.

Under Code, § 5276, requiring names of witnesses and minutes of testimony in the indictment, defendant *held* not entitled to complain of omission of inconsequential evidence, or names of witnesses giving the same.—State v. Hasty (Iowa) 1115.

Code, § 5276, requiring indorsement of names of witnesses on the indictment, *held* to include witnesses whose testimony before the committing magistrate was taken down and submitted to the grand jury.—State v. Hasty (Iowa) 1115.

§ 13. —— Course and conduct of trial in general.

Suspension of a criminal prosecution to investigate an effort to bribe one of the state's witnesses *held* not error.—People v. Salsbury (Mich.) 936.

Manner of investigation of an effort to bribe one of the state's witnesses during a criminal prosecution *held* not error.—People v. Salsbury (Mich.) 936.

Where an attorney assisted the state's attorney in the prosecution of a criminal case, it will be presumed that he was rightfully there, either under an order of court entered under Laws 1901, p. 234, c. 178, or because of employment by the county commissioners.—State v. Tough (N. D.) 1025.

in general.

The province of court a
question of conspiracy, f
cing and considering dec
spirator, stated.—State v.

A charge *held* erroneou
circumstantial and direc
Crofford (Iowa) 889.

The statement in a char
remember that a failure
by which a crime might
be corrected by a new tri
v. Crofford (Iowa) 889.

§ 15. —— Necessity, r
ficiency of im

An instruction on an al
able, as telling the jury t
testimony, nor as indica
be controlled by the suppo
—People v. Portenga (Mi

An instruction as to d
sworn as a witness and a
not error.—State v. Ames

Where the court charge
all the evidence, and pa
to show previous good
necessary to further speci
that they "must" conside
character.—State v. Ame

An instruction that the
cence remains with accu
tablishes guilt beyond a r
objectionable as shifting
onto the defendant.—Van
266.

The word "evidence" t
the means by which any
tablished or disproved.—C
649.

Defendant has a right t
on his own testimony.—S
1025.

In a criminal prosecut
ant pleaded insanity, th
from the opinion of th
garding insanity of a tes
a part of the court's cha
v. State (Wis.) 417.

In a criminal case, a
insanity *held* proper.—I
417.

§ 16. —— Requests f

The trial judge is not
exact language of requ
properly states the law
dence and the several t
People v. Quimby (Mich

It was not error to r
tions substantially cove
Lowe v. State (Wis.) 4

§ 17. —— Custody, c
erations of j

Evidence in criminal ca
conduct of juror.—State

Where a deputy sheriff
state, it did not disqua
charge of the jury.—Var
266.

§ 18. Appeal and er

On a prosecution for s
the woman's father, it
ror to refer to the wom
witness."—State v. Stoll

In a criminal case, the
ing question *held* not grou
v. Stolley (Iowa) 707.

In a prosecution for t
from his roommate, the

Digitized by Google

fore returning to his room was without prejudice.—State v. King (Iowa) 712.

In a prosecution for larceny of a watch, which accused claimed was pledged to him for a loan, the refusal to permit a corroborating witness to state the arrangement as to the return of the money *held* not prejudicial; the evidence having been subsequently received.—State v. King (Iowa) 712.

In a prosecution for larceny of a watch from his roommate, the exclusion of evidence by accused as to whose duty it was to lock the door, and if there was any arrangement as to who should lock it, *held* not prejudicial.—State v. King (Iowa) 712.

In a prosecution for larceny of a watch, which accused claimed was pledged to him for a loan, the refusal to permit a corroborating witness, who was first applied to for the loan, to state why he did not loan the money, *held* without prejudice.—State v. King (Iowa) 712.

Testimony that accused, after his arrest, asked witness which side he was called to testify on, and stated, if he could do him no good, not to do him harm, is not prejudicial.—State v. Bebb (Iowa) 714.

Where prosecutrix has previously stated she had intercourse before the crime of accused, the refusal to permit accused to ask her whether she had not had intercourse with other men is not prejudicial.—State v. Bebb (Iowa) 714.

Error in refusing testimony as to defendant's intoxication was not made harmless by permitting witness to describe his appearance and conduct.—State v. Cather (Iowa) 722.

In a prosecution for assault with intent to rape, showing of intimacy between defendant and one who had previously been intimate to prosecutrix *held* not prejudicial.—State v. Scroggs (Iowa) 723.

On prosecution for statutory rape, certain evidence, if erroneous, *held* not prejudicial.—State v. Scroggs (Iowa) 723.

Where it was in dispute whether or not the county attorney had made statements commenting on defendant's failure to testify in his own behalf, the court, on appeal, will adopt the finding of the trial court.—State v. Hasty (Iowa) 1115.

Where the evidence is not preserved in the record, it will be presumed that the decision on a question of fact is right.—Hoy v. State (Neb.) 228.

Affidavits used on the trial of an issue of fact do not become a part of the record by being certified by the clerk of the district court.—Hoy v. State (Neb.) 228.

An alleged abuse of discretion of the trial court is unavailing, unless excepted to.—Guthrie v. State (Neb.) 243.

An irrelevant question asked of a witness by the court in a criminal prosecution cannot be reviewed on appeal, in the absence of objections and an exception.—Lowe v. State (Wis.) 417.

CROPS.

As subject of chattel mortgage, see "Chattel Mortgages," § 1.
As subject to execution, see "Execution," § 2.
Specific performance of contract to mortgage crops, see "Specific Performance," § 1.

CROSS-EXAMINATION.

See "Witnesses," § 3.

CRUELTY.

Ground for divorce, see "Divorce," § 1.
Ground for continuance, see "Criminal Law," § 10.

CURTESY.

See "Dower."

Where plaintiffs' mother died in 1883, seised in fee of real property, leaving the father as surviving spouse, he took a life estate as tenant by curtesy.—Withnell v. Withnell (Neb.) 221.

CUSTODY.

Of jury, see "Criminal Law," § 17.

CUSTOMS AND USAGES.

Opinion evidence, see "Evidence," § 10.

In an action by a servant for injuries, evidence of custom on question whether it was the duty of master or servant to inspect place of work *held* not to vary any rule of law or contract relation.—Thayer v. Smoky Hollow Coal Co. (Iowa) 718.

In an action for injuries sustained by employé in a coal mine, evidence that according to custom it was defendant's duty to inspect, etc., *held* admissible.—Thayer v. Smoky Hollow Coal Co. (Iowa) 718.

In an action by a servant for injuries, evidence as to the custom on the question as to the duty of the master or the servant to inspect the place of work is admissible, though not pleaded.—Thayer v. Smoky Hollow Coal Co. (Iowa) 718.

In an action by a servant for injuries, a usage being shown whereby it was the duty of the master to inspect and care for the place of work, the master is presumed to have had knowledge of the usage.—Thayer v. Smoky Hollow Coal Co. (Iowa) 718.

DAMAGES.

Compensation for property taken for public use, see "Eminent Domain," § 2.

Damages for particular injuries.

See "Death," § 1; "Malicious Prosecution," § 3.
Appropriation of water rights, see "Waters and Water Courses," § 1.
Breach by buyer of contract for sale of goods, see "Sales," § 7.
Breach by vendor of contract for sale of land, see "Vendor and Purchaser," § 6.
Breach of contract for sale of goods, see "Sales," § 7.
Breach of covenant, see "Covenants," § 3.
Expulsion of member of church, see "Religious Societies."
Expulsion of member of soldiers' home, see "Army and Navy."
Fires caused by operation of railroad, see "Railroads," § 7.
From failure to deliver telegraph message, see "Telegraphs and Telephones," § 2.
To animals caused by operation of railroad, see "Railroads," § 6.
Wrongful discharge from employment, see "Master and Servant," § 1.

§ 1. Grounds and subjects of compensatory damages.

In an action for purchase of a windmill, certain damages in defendant's counterclaim *held* too remote.—Cole v. Laird (Iowa) 744.

In an action against a railroad company for the burning of a meadow, the jury were properly allowed to add interest to the damages which they found plaintiff sustained at the

Digitized by Google

time of the fire.—Black v. Minneapolis & St. L. R. Co. (Iowa) 984.

A party may recover for gains prevented, where such damages are certain and the natural result of the wrong complained of.—Kitchen Bros. Hotel Co. v. Philbin (Neb.) 487.

§ 2. Liquidated damages and penalties. Where parties to a contract stipulate as to liquidated damages, on a breach the court will take such sum as the measure of damages only when it will simply compensate his loss.—Lee v. Carroll Normal School Co. (Neb.) 65.

If the measure of damages fixed in a contract for a breach thereof will more than compensate the innocent party, the court will regard such sum as a penalty.—Lee v. Carroll Normal School Co. (Neb.) 65.

§ 3. Measure of damages. In an action for breach of a contract to finish a house by a certain time, the damage is the loss of the possession of the building as a thing of use.—Lee v. Carroll Normal School Co. (Neb.) 65.

In a suit for an alleged breach of a contract providing for the sale of goods at private sale, wherein the breach alleged is a sale of a part of the goods at auction, measure of damages determined.—Paxton & Gallagher v. Vadbouker (Neb.) 378.

In an action for breach of contract to place certain property in the hands of plaintiff for sale, instruction as to measure of damages *held* erroneous.—Paxton & Gallagher v. Vadbouker (Neb.) 378.

Where damages for breach of a contract are capable of actual computation, the amount thereof should not be left to conjecture.—Paxton & Gallagher v. Vadbouker (Neb.) 378.

In an action for the contract price of certain advertising work, where the proof showed breach by defendants after part performance, plaintiffs *held* entitled to recover only for that part of the price which accrued prior to the breach.—Ward v. American Health Food Co. (Wis.) 388.

§ 4. Inadequate and excessive damages. Where a young man lost the entire vision of one eye, and the other was impaired to the extent of about nine-tenths, a verdict of $14,000 is not excessive.—Vant Hul v. Great Northern Ry. Co. (Minn.) 789.

§ 5. Pleading, evidence, and assessment. In an action for damages from breach of contract, the failure to charge more fully as to the damages *held* not reversible error.—Anderson Carriage Co. v. Pungs (Mich.) 563.

In an action for personal injuries, an instruction as to the effect of a former injury sustained by plaintiff *held* sufficient.—Leslie v. Jackson & S. Traction Co. (Mich.) 580.

In an action by a passenger for injuries sustained by reason of the car running through an open switch, the allegations of the declaration *held* to authorize proof relative to neuritis of the sciatic nerve.—Leslie v. Jackson & S. Traction Co. (Mich.) 580.

In an action for personal injuries, damages for pain and mental suffering are recoverable without pleading or proving the same.—Gagnier v. City of Fargo (N. D.) 841.

In the absence of evidence of permanent disability, life tables *held* inadmissible.—Tenney v. Rapid City (S. D.) 96.

In an action for injuries which never kept plaintiff from his business, evidence as to damages sustained by him by loss of time is incompetent.—Strait v. City of Eureka (S. D.) 695.

In an action for injuries which disabled plaintiff from attending to his business, *held* not error to permit him to state w
tomary profits from his busi
Heinemann (Wis.) 800.

DEATH.

Admissions as evidence, see "
Of partner, see "Partnership,"
Of party to action ground fo
"Abatement and Revival," §
Opinion evidence, see "Eviden

§ 1. Actions for causing
Where a person wrongfully
appreciable length of time th
tion by his administrator was
der the survival act, and
Olivier v. Houghton County St
434.

In an action for injuries r
after survival for an appre
time, intestate's administrat
to recover for pain and suffe
tate lived, and for his loss of
during the time he would hav
—Olivier v. Houghton Coun
(Mich.) 434.

Where the alleged wrongful
tiff's intestate was not instanta
by his administrator was for
der Comp. Laws, §§ 10,427, 10
death, under section 10,117.—
Trunk Elevator Co. (Mich.) 56

A notice of a claim for inju
Rev. St. 1898, § 4222, *held* not
reason of the fact that it was
beneficiaries of the deceased, a
defendant of a claim for their
fer v. National Distilling Co.

DEBTOR AND CRE

See "Assignments for Benefi
"Bankruptcy"; "Creditors'
lent Conveyances."

DECEDENTS

Estates, see "Descent and Dist
ecutors and Administrators."
Testimony as to transactions w
deceased, see "Witnesses," §

DECEIT.

See "Fraud."

DECLARATION

As evidence in civil actions,
§ 6.

DECREE.

Authorizing foreclosure sale, s
§ 10.

DEEDS.

Absolute deed as mortgage, s
§ 1.
Acknowledgment of execution,
edgment."
Covenants in deeds, see "Cove
Distinguished from will, see "
Estoppel by deed, see "Estoppe
In fraud of creditors, see "Fra
ances."
In trust, see "Trusts," § 1.
Parol or extrinsic evidence, s
§ 9.
Records of, as primary evide
dence," § 3½.
Reformation, see "Reformati
ments."
Restrictions on perpetuities, see
Seals, see "Seals."

Digitized by Google

See "Guardian and Ward," § 3; "Husband and Wife," § 1; "Insane Persons," § 2; "Municipal Corporations," § 9.

Deeds of particular species of property.

See "Homestead," § 1; "Mines and Minerals," § 1.

Particular classes of deeds.

Of trust, see "Chattel Mortgages," § 1; "Mortgages."
Tax deeds, see "Taxation," § 7.

§ 1. Requisites and validity.

Mere weakness of mind without fraud or undue influence is insufficient to invalidate a conveyance.—Paulus v. Reed (Iowa) 757.

In order to show a conveyance invalid on the ground of mental incapacity, a mental deficiency justifying a conclusion that the grantor did not exercise deliberate judgment is sufficient.—Paulus v. Reed (Iowa) 757.

Where there is a conveyance between husband and wife, and the grantor is of weak mind, the courts will prevent a disposition of the property by the grantee, such as would deprive the grantor of all interest therein.—Paulus v. Reed (Iowa) 757.

Where a trust deed, delivered to a third person to be delivered to the trustees after grantor's death, was assented to and virtually accepted by a beneficiary when it was executed, and was accepted by the grantees after grantor's death, the acceptance was sufficiently shown.—Albrecht v. Albrecht (Iowa) 1087.

Where a grantee voluntarily consents to the destruction of a deed and the substitution of a trust deed for her benefit, she cannot insist that the deed absolute passed title to her, though destroyed.—Albrecht v. Albrecht (Iowa) 1087.

§ 2. Construction and operation.

Description in a deed examined, and premises conveyed determined.—Currier v. Jones (Iowa) 766.

The rule that deeds must be construed most strongly against the grantor cannot be invoked to defeat the intent of the grantor fairly appearing from the instrument.—Negaunee Iron Co. v. Iron Cliffs Co. (Mich.) 468.

Where plaintiffs in 1883, being owners of lots on the Mississippi river, conveyed to the city of St. Paul by a deed a perpetual easement for the purpose of a public levee, *held*, that the city acquired an easement only.—Sanborn v. Van Duyne (Minn.) 41.

§ 3. Pleading and evidence.

In a suit to cancel a deed, evidence *held* sufficient to show that grantor delivered the deed without reserving the right of control intending to pass a present estate.—Albrecht v. Albrecht (Iowa) 1087.

DEFAMATION.

See "Libel and Slander."

DEFAULT.

Equitable relief against default judgment, see "Judgment," § 6.
Judgment by, see "Judgment," § 2.

DEFICIENCY.

On foreclosure of mortgage, see "Mortgages," § 11.

DELAY.

Laches, see "Equity," § 1.
Measure of damages for delay in performance of contract, see "Damages," § 3.

As to management of decedent's estate, see "Executors and Administrators," § 2.

DELIVERY.

Of deed, see "Deeds," § 1.
Of gift, see "Gifts," § 1.
Of goods by carrier, see "Carriers," § 1.
Of insurance policy, see "Insurance," § 3.

DEMAND.

As condition precedent to replevin proceedings, see "Replevin," § 1.

DEMONSTRATIVE EVIDENCE.

In civil actions, see "Evidence," § 4.

DEMURRER.

For defect of parties, see "Parties," § 3.
In pleading, see "Pleading," § 3.

DEPOSITARIES.

A depository of a trust fund is *held* bound to restore the fund to the true owner on demand, although such deposit was made by an agent or trustee.—Union Stockyards Nat. Bank v. Campbell (Neb.) 608.

DEPOSITIONS.

See "Affidavits"; "Witnesses."

Under Code, § 4712, expressly providing that if depositions are filed during a term, exceptions other than for incompetency must be filed by noon of the third day after such filing, a motion to suppress depositions filed 10 days after the depositions were filed in term was too late.—Casley v. Mitchell (Iowa) 725.

Objections to depositions other than for incompetency or irrelevancy must be presented before the commencement of the trial.—Woodard v. Cutter (Neb.) 54.

Where an entire deposition is not asked to be suppressed, and nothing but irrelevant testimony is stricken from the deposition, it is immaterial whether done before or after it is offered in evidence.—Stull v. Stull (Neb.) 196.

Exhibits sufficiently identified may be considered in connection with deposition, though not attached.—Black v. Webber (Neb.) 606.

DEPOSITS.

In bank, see "Banks and Banking," § 2.
Of deed for delivery on grantor's death, see "Death," § 1.

DEPUTIES.

See "Sheriffs and Constables," § 1.

DESCENT AND DISTRIBUTION.

See "Curtesy"; "Dower"; "Executors and Administrators"; "Homestead," § 2; "Wills."
Inheritance and transfer taxes, see "Taxation," § 9.

§ 1. Nature and course in general.

Where real estate was conveyed to a trustee under a trust which was void as a perpetuity, on the death of the grantor the property was subject to disposition as intestate estate.—Casgrain v. Hammond (Mich.) 510.

Digitized by Google

tive shares.

Where a wife received a large part of the **rice** of land conveyed to her husband's son, she **ould** not have the deed vacated after her hus**and's** death, on the ground that it was made **o defraud** her of her rights in his property.—**Willis** v. Robertson (Iowa) 900.

3. Rights and liabilities of heirs and distributees.

On a claim by attorneys for services render**d an** estate, *held*, that there was nothing in **he pleadings** showing any liability of the heirs. **—In** re Bruning's Estate (Iowa) 780; Salinger **& Korte** v. Arts, Id.

On proceedings by attorneys to enforce claim **against** an estate for services, a personal judg**ment** against the heirs *held* erroneous.—In re **Bruning's** Estate (Iowa) 780; Salinger & Korte **v. Arts**, Id.

A court sitting in probate has no jurisdiction **to determine** the individual liability of heirs for **services** rendered the estate by attorneys.—In **re Bruning's** Estate (Iowa) 780; Salinger & **Korte v. Arts**, Id.

Where a widow had received a certain sum **in settlement** of her interest in her husband's **estate** and for signing a deed to defendant, she **could** not set such deed aside as a fraud on her **interest** without a return of the money received. **—Willis** v. Robertson (Iowa) 900.

DESCRIPTION.

Names of individuals, see "Names."
Of property conveyed, see "Boundaries," § 1; "Deeds," § 2.
Of property demised, see "Landlord and Tenant," § 3.
Of property devised or bequeathed, see "Wills," § 5.
Of property in chattel mortgage, see "Chattel Mortgages," § 1.

DETINUE.

See "Replevin."

DEVISES.

See "Wills."

DIRECTING VERDICT.

In civil actions, see "Trial," § 4.

DISABILITIES.

Effect on limitation, see "Limitation of Actions," § 1.

DISCHARGE.

From employment, see "Master and Servant," § 1.
From indebtedness, see "Bankruptcy," § 2; "Compromise and Settlement"; "Release."
Of executor, see "Executors and Administrators," § 1.
Of indemnitor, see "Indemnity."
Of member of soldiers' home, see "Army and Navy."
Of mortgage, see "Mortgages," § 5.
Of sureties on appeal bond, see "Appeal and Error," § 32.
Of sureties on bond of assignee for creditors, see "Assignments for Benefit of Creditors," § 3.

DISCONTINUANCE.

Of action, see "Dismissal and Nonsuit," § 1.

DISCRETION OF C

See "New Trial," § 1.
Amendment of pleadings, see '
As to granting continuance, ance."
As to strict foreclosure of lar "Vendor and Purchaser," § 5
Review in civil actions, see "A ror," § 27.

DISMISSAL AND N(

Conclusiveness of judgment o "Judgment," § 9.
Dismissal of appeal from justic of the Peace," § 4.
Dismissal of appeal or writ of peal and Error," § 21.
Dismissal of election contest, § 1.

§ 1. Voluntary.

Where a case has been subm rer to the evidence, plaintiff's without prejudice is lost.—Fror ans City Steam Laundry (Neb.)

§ 2. Involuntary.

Refusal of a trial court to missal, under Rev. St. 1898, § been granted for plaintiff's failu within five years, as authorized b *held* an abuse of the trial cou Hine v. Grant (Wis.) 796.

A verified complaint in an a *held* a sufficient showing of mer cation to set aside an order c failure to prosecute.—Hine v. G

DISQUALIFICATI

Of appraisers on foreclosure, se § 10.

DISSOLUTION

Of corporation, see "Banks and
Of injunction, see "Injunction,"

DISTRIBUTION

Of estate of bankrupt, see "Ba
Of estate of decedent, see "Des bution."

DISTRICT COUR

Mandamus to control powers, se § 2.

DIVISION.

Of municipal corporations, see " porations," § 1.

DIVORCE.

Separate maintenance, see " Wife," § 3.

§ 1. Jurisdiction, proceedi lief.

A decree in divorce, justified mony, will not be disturbed on a son v. Donaldson (Mich.) 448.

In an action for divorce on th treme cruelty, a finding in fav ant *held* error.—Parkinson v. Pa 497.

Evidence *held* to sustain a de on the ground of extreme cruel McKee (Neb.) 489.

Digitized by Google

§ 2. Alimony, allowances, and disposition of property.

A decree in divorce *held* an adjudication of the property rights of the wife, and conclusive in a suit instituted by the wife for recovery of land.—Baird v. Connell (Iowa) 863.

Under the facts, *held*, that allowance of only $250 alimony to one from whom her husband obtained a divorce would not be disturbed.—Donaldson v. Donaldson (Mich.) 448.

While there is no fixed rule for determining the amount of alimony to be awarded, such award should, under Comp. St. 1901, c. 25, § 22, bear a reasonable relation to the husband's ability to pay.—McKee v. McKee (Neb.) 489.

In awarding alimony, the court should consider the condition of the parties, financially and otherwise, the duration of their marriage, the value of the husband's estate, and how far the wife contributed thereto.—McKee v. McKee (Neb.) 489.

§ 3. Operation and effect of divorce, and rights of divorced persons.

After divorce the husband has no right of possession in the separate property of the wife, occupied as a homestead while the marriage relation existed.—Cizek v. Cizek (Neb.) 657.

DOCKETS.

Of judgments, see "Judgment," § 4.

DOCUMENTS.

As evidence in civil actions, see "Evidence," § 8.
As evidence in criminal prosecutions, see "Criminal Law," § 4.

DOMICILE.

Of parties as affecting venue, see "Venue," § 1.
Settlement of pauper, see "Paupers," § 2.

DONATIONS.

See "Gifts."

DOWER.

See "Curtesy."

§ 1. Inchoate interest.

Under Code, § 3366, adverse possession *held* not to extinguish wife's dower rights.—Lucas v. Whitacre (Iowa) 776.

Where a husband transferred real estate to his son in order to defraud his wife, the deed could not be impeached on that ground by the husband's heirs and devisees.—Willis v. Robertson (Iowa) 900.

§ 2. Rights and remedies of widow.

Evidence in an action for dower *held* to create no presumption that deceased had obtained a divorce from plaintiff.—Casley v. Mitchell (Iowa) 725.

In an action for dower, any presumption that deceased had obtained a divorce from plaintiff *held* overcome by evidence that deceased had abandoned her without cause and remarried under an assumed name.—Casley v. Mitchell (Iowa) 725.

Where, in an action for dower in lands of a deceased resident, there was no evidence that he was an alien, a conveyance by him was not free from the widow's rights, under McClain's Code 1888, § 3646, relating to nonresident aliens.—Casley v. Mitchell (Iowa) 725.

Petition by widow for confirmation to her, under Code, § 3366, of title to lands of which the husband was seised, *held* to have sufficient-ly regarded any loss of her interest by judicial sale.—Lucas v. Whitacre (Iowa) 776.

Limitations *held* not to run against wife's enforcement of her dower rights, given by Code, § 3366, until the death of the husband.—Lucas v. Whitacre (Iowa) 776.

DRAFT.

See "Bills and Notes," §§ 4, 6.

DRAINAGE.

Of roads, see "Highways," § 2.

DRAINS.

In cities, see "Municipal Corporations," § 12.

DRUNKENNESS.

Opinion evidence, see "Criminal Law," § 9.

DUEBILLS.

See "Bills and Notes," § 2.

DUE PROCESS OF LAW.

See "Constitutional Law," § 6.

DUPLICITY.

In indictment, see "Indictment and Information," § 3.

EASEMENTS.

See "Highways."
Creation by deed, see "Deeds," § 2.

§ 1. Creation, existence, and termination.

One who seeks to acquire an easement of maintaining a ditch over another's land by adverse user must maintain it without material change of location for the whole statutory period.—Dunn v. Thomas (Neb.) 142.

In order to acquire an easement by prescription, the adverse user must be continuous and substantially identical.—Dunn v. Thomas (Neb.) 142.

EJECTION.

Of passenger, see "Carriers," § 2.

EJECTMENT.

Right of devisee to prosecute ejectment for lands devised during pendency of probate proceedings, see "Wills," § 6.

§ 1. Right of action and defenses.

One who had quit premises on notice, leaving the keys on the inside, the doors being locked, one by a spring lock, *held* not in unlawful possession, so as to authorize ejectment against him.—Connor v. Connor (Mich.) 441.

Where plaintiffs conveyed lots to a city for a public levee, and the city wrongfully leased them for private manufacturing purposes, plaintiffs could maintain an action to recover possession and for equitable relief.—Sanborn v. Van Duyne (Minn.) 41.

The original owner of vacant unoccupied land is entitled to maintain ejectment against a claimant under a void tax deed.—Dunbar v. Lindsay (Wis.) 557.

Digitized by Google

ELECTIONS.

Conclusiveness of judgment establishing invalidity of election, see "Elections," § 8.
Constitutional provisions relating to, self-executing, see "Constitutional Law," § 1.
Of bank officers, see "Banks and Banking," § 1.
Of police judge, see "Judges," § 1.

§ 1. Contests.

The contestant in an election contest may voluntarily dismiss it before issue joined.—Moore v. Waddington (Neb.) 279.

Where an election contest has been dismissed, the court is without jurisdiction, until the dismissal is set aside, to allow another to intervene.—Moore v. Waddington (Neb.) 279.

Where an election contest has been dismissed, the court has no authority to set the dismissal aside without notice to the contestant.—Moore v. Waddington (Neb.) 279.

After a motion to set aside the dismissal of an election contest, and an application for leave to intervene, the incumbent challenged the jurisdiction. *Held*, that the contestant was a necessary party to proceedings in error to review an order sustaining such challenge.—Moore v. Waddington (Neb.) 279.

ELEVATORS.

See "Carriers," § 2; "Negligence," § 1; "Warehousemen."

EMINENT DOMAIN.

Public improvements by municipalities, see "Municipal Corporations," §§ 5–10.

§ 1. Nature, extent, and delegation of power.

Sp. Laws 1891, p. 255, c. 34, authorizing the city to lease property in which it had an easement for levee purposes, was unconstitutional, as diverting property acquired by the city for a public use to a private use.—Sanborn v. Van Duyne (Minn.) 41.

§ 2. Compensation.

Construction of a street railroad close to the side of the highway *held* to give the abutting owner no right to compensation.—Austin v. Detroit, Y. & A. A. Ry. (Mich.) 35.

An abutting owner *held* to have no right to compensation because the grade of a highway is lowered for a street railroad.—Austin v. Detroit, Y. & A. A. Ry. (Mich.) 35.

The construction and operation of a street railroad on a highway is not an additional servitude.—Austin v. Detroit, Y. & A. A. Ry. (Mich.) 35.

In proceedings to condemn land, the money awarded by the freeholders or on appeal belongs to the lienholders to the extent of their liens.—Omaha Bridge & Terminal Ry. Co. v. Reed (Neb.) 276.

§ 3. Proceedings to take property and assess compensation.

An appeal by a mortgagee in condemnation proceedings is not effective as to the land owner against whom no summons has been issued.—Omaha Bridge & Terminal Ry. Co. v. Reed (Neb.) 276.

If the land owner is not brought into the district court by the mortgagee's appeal, the corporation at whose instance the proceeding was instituted may bring him in to protect its rights.—Omaha Bridge & Terminal Ry. Co. v. Reed (Neb.) 276.

On appeal by mortgagee from award in eminent domain, the question to be determined is the value of the property appropriated.—Omaha

Bridge & Terminal R
276.

A landowner who fa
freeholders' award in a
ing is conclusively b
Bridge & Terminal R
276.

A mortgagee is an ow
of the eminent domain
from the freeholders' av
Terminal Ry. Co. v. R

EMPL

See "Master and Servan

ENTIRE C

Of employment, see "M

ENT

Of judgment, see "Judg
Of public lands, see "P
Re-entry by landlord, s
ant," § 5.

ENTRY, W

See "Ejectment."

EQUALIZ

Of taxes, see "Taxation

EQUITABLE

See "Estoppel," § 2.

EQU

Equitable estoppel, see "

Particular subjects of eq
equitable

See "Creditors' Suit";
ces"; "Injunction"; "
ing Title"; "Receive
Instruments"; "Sequ
Performance"; "Trust
Reinstatement of action,
Relief against judgment,

§ 1. Laches and stal

Laches cannot be predi
lay is occasioned by assu
legal proceedings will b
quent promises that pa
Cushing v. Schoeneman

§ 2. Pleading.

Objections to equity j
by failure to raise th
gaunee Iron Co. v. Iron

ERROR, W

See "Appeal and Erro
§ 18.

ESTABLIS

Of boundaries, see "Bou
Of bridges, see "Bridges,
Of highways, see "High
Of railroads, see "Street
Of telegraphs or teleph
and Telephones," § 1.
Of trusts, see "Trusts,"
Of wills, see "Wills," §

Digitized by Google

Created by deed, see "Deeds," § 2.
Created by will, see "Wills," § 5.
Decedents' estates, see "Descent and Distribution"; "Executors and Administrators."
Estates for years, see "Landlord and Tenant."
Restrictions on creation of future estates, see "Perpetuities."

ESTOPPEL.

By judgment, see "Judgment," §§ 8, 9.
By stipulation, see "Stipulations."
To allege error, see "Appeal and Error," § 24.
To allege ultra vires nature of insurance contracts, see "Insurance," § 3.
To allege usury, see "Usury," § 1.
To deny corporate powers, see "Corporations," § 6.
To object to municipal assessments, see "Municipal Corporations," § 8.

§ 1. By deed.

One who receives a deed of land from the devisee and her husband is not estopped to claim under the will and the conveyance from her because the husband had obtained a tax deed on the land.—Hanley v. Kraftczyk (Wis.) 820.

§ 2. Equitable estoppel.

Plaintiff *held* not estopped to assert that goods delivered to defendant were to be applied in part payment of railroad ties sold by him to plaintiff, thereby taking sale of the ties out of the statute of frauds.—Dallavo v. Richardson (Mich.) 20.

One furnishing money to a debenture company for its guaranty fund *held* estopped, as against purchasers of debentures, from claiming the fund.—Christian v. Michigan Debenture Co. (Mich.) 22.

Plaintiffs, who had conveyed to a city an easement in certain lots for levee purposes, *held* not estopped from thereafter disputing the right of the city to lease the premises for private manufacturing purposes.—Sanborn v. Van Duyne (Minn.) 41.

In an action on a contract, where the defense is fraud in securing the signature of one of the parties, the doctrine that the carelessness of a party estops him from disputing contents of writing is not applicable.—Spelts & Klosterman v. Ward (Neb.) 56.

An estoppel must be pleaded.—Carnahan v. Brewster (Neb.) 590.

A city *held* not estopped from claiming certain streets, vacated under an agreement with certain railroads, as a highway.—City of Ashland v. Northern Pac. Ry. Co. (Wis.) 688.

Where no estoppel in pais was pleaded, evidence thereof *held* inadmissible.—Wisconsin Farm Land Co. v. Bullard (Wis.) 833.

EVIDENCE.

See "Affidavits"; "Depositions"; "Witnesses."
Admissibility of evidence under pleading, see "Pleading," § 7.
Applicability of instructions to evidence, see "Trial," § 7.
Charge on weight of, see "Criminal Law," § 14.
Construction and operation of instructions as to preponderance of evidence, see "Trial," § 9.
Evidence considered on appeal, see "Appeal and Error," § 23.
Exceptions to rulings on, for purpose of review, see "Appeal and Error," § 7.
Harmless error in rulings on, see "Appeal and Error," § 29; "Criminal Law," § 18; "Homicide," § 4.
see "Appeal and Error," § 6; "Criminal Law," § 18.
Necessity of preservation of evidence in bill of exceptions for purpose of review, see "Appeal and Error," § 16.
Production of documents by witness, see "Witnesses," § 1.
Questions for jury in civil actions, see "Trial," § 4.
Reception at trial, see "Criminal Law," § 11; "Trial," § 2.
Requisites and sufficiency of instructions as to evidence, see "Evidence," § 6.
Review of rulings on evidence, see "Appeal and Error," §§ 1, 18, 28.
Specification of errors as to insufficiency of, see "Appeal and Error," § 19.
Tax deeds as evidence, see "Taxation," § 7.

As to particular facts or issues.

See "Assignments," § 1; "Boundaries," § 2; "Customs and Usages"; "Damages," § 5; "Deeds," § 3; "Fraudulent Conveyances," § 3; "Marriage"; "Partnership," § 1; "Payment," § 3.
Abandonment of homestead, see "Homestead," § 3.
Assent to contract, see "Contracts," § 1.
Authority of agent, see "Principal and Agent," § 2.
Authority of corporate officer, see "Corporations," § 6.
Character of contract as wagering contract, see "Gaming," § 1.
Character of instrument as mortgage, see "Mortgages," § 1.
Character of instrument whether deed or will, see "Wills," § 3.
Compensation of receiver, see "Receivers," § 4.
Defense of statute of frauds, see "Frauds, Statute of," § 7.
Existence of highway, see "Highways," § 1.
Existence of natural water course, see "Waters and Water Courses," § 1.
Existence of trust, see "Trusts," § 1.
Good faith of purchaser of land, see "Vendor and Purchaser," § 4.
Legality of contract, see "Contracts," § 1.
Regularity of tax sale, see "Taxation," § 2.
Testamentary capacity, see "Wills," § 1.
Undue influence in procuring making of will, see "Wills," § 3.
Validity of return of process, see "Process," § 1.
Validity of tax sale, see "Taxation," § 7.

In actions by or against particular classes of parties.

See "Beneficial Associations"; "Carriers," § 2; "Insane Persons," § 3; "Master and Servant," § 6; "Municipal Corporations," §§ 12, 14; "Principal and Surety," § 2; "Railroads," §§ 6, 7.
Assignees, see "Assignments," § 3.
Banks, see "Banks and Banking," § 2.
Legatees, see "Wills," § 6.

In particular civil actions or proceedings.

See "Assault and Battery," § 1; "Divorce," § 1; "Malicious Prosecution," § 3; "Negligence," § 3; "Reformation of Instruments," § 2; "Trover and Conversion," § 2.
Accounting by trustee, see "Trusts," § 3.
Alienation of affections, see "Husband and Wife," § 4.
Application to open default, see "Judgment," § 2.
For breach of contract, see "Contracts," § 5.
For breach of warranty, see "Sales," § 8.
For compensation of broker, see "Brokers," § 3.
For conversion of mortgaged goods, see "Chattel Mortgages," § 5.
Foreclosure, see "Mortgages," § 9.

Digitized by Google

"Judgment," § 6.
For fires caused by operation of railroad, see "Railroads," § 7.
For injuries to animals caused by operation of railroad, see "Railroads," § 6.
For penalty for violation of railroad regulations, see "Railroads," § 5.
For personal injuries, see "Carriers," § 2; "Master and Servant," § 6; "Municipal Corporations," § 12.
For rent, see "Landlord and Tenant," § 4.
For reward, see "Rewards."
On account stated, see "Account Stated."
On insurance policy, see "Insurance," §§ 10, 11.
On judgment, see "Judgment," § 11.
On note, see "Bills and Notes," § 6.
Probate proceedings, see "Wills," § 4.
To enforce dower rights, see "Dower," § 2.
To establish and enforce right of exemption, see "Exemptions," § 3.
To recover possession of mortgaged goods, see "Chattel Mortgages," § 3.

In criminal prosecutions.

See "Abortion"; "Adultery"; "Bastards," § 1; "Bribery"; "Criminal Law," §§ 4–10; "Homicide," § 1; "Larceny," § 1; "Rape," § 1; "Robbery"; "Seduction," § 1.

§ 1. Judicial notice.

The court will take judicial notice that the person whose name appears to a jurat was a notary public in and for the county named, and will presume that he acted within the county of his jurisdiction.—Black v. Minneapolis & St. L. R. Co. (Iowa) 984.

In an action for injuries in a collision with a street car, it could not be presumed as a matter of common knowledge that the car could have been stopped within 150 feet.—Kotila v. Houghton County St. Ry. Co. (Mich.) 437.

§ 2. Presumptions.

It is the presumption of law that all officers have done their duty until the contrary is shown.—Brown v. Helsley (Neb.) 187; Pine Tree Lumber Co. v. City of Fargo (N. D.) 357.

It is presumed that the laws of another state are the same as our own, in the absence of proof to the contrary.—Staunchfield v. Jeutter (Neb.) 642.

Under the statutes of North Dakota public officers are presumed to have regularly performed their duties until the contrary is shown.—Fisher v. Betts (N. D.) 132.

Where an act is done by a public officer which can be done only after the performance of some prior act, proof of the latter carries with it the presumption of the due performance of the prior act.—Pine Tree Lumber Co. v. City of Fargo (N. D.) 357.

§ 3. Relevancy, materiality, and competency in general.

In an action against an electric railroad for death of a cow, declaration of motorman *held* properly admitted as part of res gestæ.—Ensley v. Detroit United Ry. (Mich.) 34.

A conversation, some 20 minutes after the execution of a will, between testator and a subscribing witness, in the absence of the other subscribing witness, *held* not admissible as part of the res gestæ.—Davidson v. Davidson (Neb.) 409.

Where pecuniary responsibilities of the head of a family are sought to be ascertained, it is error to refuse to instruct that for the purpose of the inquiry the fact that a portion of his property is exempt should be considered by the jury.—Winside State Bank v. Lound (Neb.) 498.

its custody are in evidence.—Arabian Horse Co. v. Bivens (Neb.) 621.

A statement of defendant's servant, while pulling intestate from scalding liquor, into which he had been thrown by the bursting of a vat, *held* admissible as res gestæ.—Hupfer v. National Distilling Co. (Wis.) 809.

In an action for assault on a female, evidence that on various occasions she had purchased beer *held* too remote to the issue as to her character.—Barton v. Bruley (Wis.) 815.

§ 3½. Best and secondary evidence.

On proof of their loss, testimony as to the substance of letters *held* competent, in a suit for damages for fraud in sale of land.—Brier v. Davis (Iowa) 983.

Evidence as to the results of a witness' examination of the regularity of an execution *held* properly excluded as secondary.—Faville v. State Trust Co. (Iowa) 1109.

Showing necessary before the contents of a lost letter can be introduced in evidence determined.—Whitwell v. Johnson (Neb.) 272.

The testimony of the witnesses who paid them is competent proof of payment of costs.—Arabian Horse Co. v. Bivens (Neb.) 621.

The record of a deed may be shown, without inquiry as to the original, where the evidence shows that the original is not in the possession or under the control of the party offering such proof.—Staunchfield v. Jeutter (Neb.) 642.

Under Comp. St. c. 73, § 13, where a deed is not in the possession of the party desiring to offer it, the record thereof is primary evidence.—Staunchfield v. Jeutter (Neb.) 642.

To prove the absence from a public office of certain papers, the best evidence is that of an official in charge thereof.—Fisher v. Betts (N. D.) 132.

Ordinarily the records and files pertaining to the matter under investigation should be produced in court by the official having charge of them.—Fisher v. Betts (N. D.) 132.

When, because of the voluminous character of the records, oral evidence is admissible to show the absence of a record or an entry, it should be given by the legal custodian after showing a diligent search.—Sykes v. Beck (N. D.) 844.

Oral evidence as to facts shown by a written record, the original of which is available, is incompetent.—Sykes v. Beck (N. D.) 844.

In an action for malicious prosecution, the justice's minutes of the testimony of complainant in the criminal case *held* inadmissible.—Eggett v. Allen (Wis.) 803.

§ 4. Demonstrative evidence.

If writings offered as evidence of handwriting are admitted by a party to be his, and he claims that their form is the result of duress or fraud, the proper course is to show such fact.—Schmuck v. Hill (Neb.) 158.

§ 5. Admissions.

In an action for alienation of affections of plaintiff's wife, a letter written by defendant to plaintiff, relating to settlement of the affairs between the parties, *held* inadmissible.—Rudd v. Dewey (Iowa) 973.

The withdrawal, before trial, of an admission contained in a pleading, while it does not destroy the force thereof as evidence, nullifies its conclusiveness.—Caldwell v. Drummond (Iowa) 1122.

In trespass for cutting trees, admissions of defendant *held* competent evidence.—Sherrard v. Cudney (Mich.) 15.

Digitized by Google

A statement of an agent made contemporaneously with the principal act or transaction, and forming a part of it, is competent evidence as in the nature of res gestæ.—Balding v. Andrews (N. D.) 305.

A statement of an elevator agent while the elevator was burning, that he tightened up the chain, and the fire must have come that way, is incompetent, as relating to a past occurrence, and as a mere statement of opinion.—Balding v. Andrews (N. D.) 305.

That a son settled an action brought by his father for alleged conversion of certain funds belonging to the latter *held* not conclusive of the facts alleged in the father's complaint and of the son's acquiescence therein.—Pym v. Pym (Wis.) 429.

In an action by a son to recover an alleged debt against his father's estate, evidence that the father had sued the son for an alleged conversion of money, and that the son had settled the suit, *held* admissible as an admission. —Pym v. Pym (Wis.) 429.

In an action for injuries, statements by a copartner with defendants, after the accident, as to the way in which it occurred, *held* admissible.—Muench v. Heinemann (Wis.) 800.

In an action for killing plaintiff's intestate by the bursting of a distillery vat, evidence that defendant's foreman pointed out the hoops surrounding the vat to a photographer *held* admissible to identify the hoops photographed as those which surrounded the vat.—Hupfer v. National Distilling Co. (Wis.) 809.

§ 6. Declarations.

Evidence of a debtor's statements as to his financial condition, made to witness before the execution of a bill of sale, *held* competent evidence on the question of a fraudulent conveyance.—Goldstein v. Morgan (Iowa) 897.

Declarations in his own favor, made by a decedent in his will, are not admissible in favor of his estate against a party filing a claim against it.—Bennett's Estate v. Taylor (Neb.) 669.

§ 7. Hearsay.

In an action for injuries on a city sidewalk, evidence that plaintiff had told a witness she had fallen on the sidewalk *held* inadmissible as hearsay.—Tenney v. Rapid City (S. D.) 96.

§ 8. Documentary evidence.

A survey recorded in the office of the county surveyor *held* admissible in evidence, under How. Ann. St. § 619, providing for the record of surveys by the county surveyor.—Sherrard v. Cudney (Mich.) 15.

Gen. St. 1894, § 5738, does not permit the introduction of items charged by the bookkeeper of an insurance company solely on statements made in the applications for insurance as to payment of premiums to agents of the company. —Union Cent. Life Ins. Co. v. Prigge (Minn.) 917.

An acknowledged instrument of a kind permitted to be acknowledged and recorded is admissible in evidence without proof of the signatures.—Brown v. Collins (Neb.) 173.

A judicial record of another state, authenticated as provided by Code Civ. Proc. § 414, is admissible in evidence without further proof that the court is one of record.—Brown v. Collins (Neb.) 173.

The record of a judgment of the Queen's Bench Division of the High Court of Justice of England *held* to fully comply with Ann. Code 1901, § 416, providing the manner of authenti-

show that pertains to the levy is not evidence that the records did not show other matters pertaining to the levy.—Fisher v. Betts (N. D.) 132.

A certificate of an official to the correctness of copies is not evidence of any other fact recited therein.—Fisher v. Betts (N. D.) 132.

A certificate of the county auditor to a paper introduced to establish the invalidity of a county tax levy *held* not a sufficient certificate, under Rev. Codes 1899, § 5700.—Sykes v. Beck (N. D.) 844.

Under Rev. Codes 1899, § 5700, officer certifying record can only certify that the copy is a correct copy of an original record, and not that any fact does or does not appear of record; nor can he certify what the record pertains to.—Sykes v. Beck (N. D.) 844.

Certified notice of official records can be introduced as primary evidence only by virtue of statute, and to authorize their admission they must be certified as required by statute.—Sykes v. Beck (N. D.) 844.

§ 9. Parol or extrinsic evidence affecting writings.

In an action on a contract of sale, parol evidence *held* admissible to show the contract was conditionally delivered to the seller's agent.—McCormick Harvesting Mach. Co. v. Morlan (Iowa) 976.

Evidence of surrounding circumstances *held* competent in construing a contract alleged to be in restraint of trade.—Detroit Salt Co. v. National Salt Co. (Mich.) 1.

Parol evidence *held* admissible as to price paid for land, though the executed contracts for sales expressed therein a consideration paid for each tract.—Witzel v. Zuel (Minn.) 1124.

Where a written contract, made the basis of an action, is impeached as procured by fraud, evidence is admissible in support of the fraudulent representations alleged.—Bauer v. Taylor (Neb.) 268.

The doctrine of the admissibility of oral evidence to vary a contract does not apply, as between a party to it and a stranger.—Crockett v. Miller (Neb.) 491.

In an action to declare a warranty deed a mortgage, the consideration expressed therein is not conclusive, but the real consideration for the transfer may be inquired into, and matters not expressed in the deed considered in determining whether it was grossly or manifestly inadequate.—Forester v. Van Auken (N. D.) 301.

Parol evidence cannot be received to add to the terms of a written contract which purports on its face to contain the whole contract of the parties.—Johnson v. Kindred State Bank (N. D.) 588.

To justify the admission of a parol promise by one of the parties to a written contract, on the ground that it is collateral, the promise must relate to a subject distinct from that to which the writing relates.—Johnson v. Kindred State Bank (N. D.) 588.

§ 10. Opinion evidence—Conclusions and opinions of witnesses in general.

In an action by a servant for injuries, a question *held* improper, as calling a witness to usurp the function of the jury.—Thayer v. Smoky Hollow Coal Co. (Iowa) 718.

A qualified witness may state the usage of a certain business, when the question is material. —Thayer v. Smoky Hollow Coal Co. (Iowa) 718.

Digitized by Google

In an action by an employé in a coal mine for injuries resulting from a fall of slate from the roof, a question to the witness as to the probable length of time the slate would drop after it became loose *held* improper.—Thayer v. Smoky Hollow Coal Co. (Iowa) 718.

In an action on an account stated, evidence that defendant understood that he was to pay a certain balance found *held* objectionable as a conclusion.—Plano Mfg. Co. v. Kautenberger (Iowa) 743

In an action for a nuisance from the discharge of a sewer, a witness may not testify whether filter beds would be of any benefit to plaintiff; this being a question for the jury.—Suddith v. Incorporated City of Boone (Iowa) 853.

Ordinary witnesses, in an action for a nuisance from the discharge of a sewer, may state that the smell of gases from the sewer's outlet made them sick.—Suddith v. Incorporated City of Boone (Iowa) 853.

The testimony of witnesses that certain tracks of a horse indicated his motion *held* admissible.—Craig v. Wabash R. Co. (Iowa) 965.

Evidence as to the results of a witness' examination regarding the regularity of an execution *held* objectionable as a conclusion.—Faville v. State Trust Co. (Iowa) 1109.

In an action for death of a servant, witnesses acquainted with the premises and work *held* entitled to express an opinion as to whether it was necessary or proper for intestate to have taken the position he did when he was injured.—Storrie v. Grand Trunk Elevator Co. (Mich.) 569.

An objection to a question to a nonexpert witness, which called for his opinion and not a statement of fact, was properly sustained.—Bullard v. Laughlin (Neb.) 159.

A witness, not connected with a county office nor in charge of the records, is not competent to testify as to absence from such office of certain papers, nor as to absence from the records of certain material entries.—Fisher v. Betts (N. D.) 132.

In an action for several injuries from defects in a city sidewalk, plaintiff was not entitled to give her opinion as to the amount of damages sustained.—Tenney v. Rapid City (S. D.) 96.

§ 11. —— Subjects of expert testimony.

In an action for personal injuries, the attending physician may testify as to how long plaintiff suffered pain after she was injured.—Wilkins v. City of Missouri Valley (Iowa) 868.

In an action to recover the price of bananas shipped to St. Paul, where the defective condition of the bananas on arrival was set up as a defense, expert testimony *held* admissible.—Fruit Dispatch Co. v. Murray (Minn.) 83.

Expert testimony as to whether bananas transported from Southern points to St. Paul were decayed, and to what amount, *held* admissible.—Fruit Dispatch Co. v. Murray (Minn.) 83.

In an action for injuries received from a defective hammer, the condition of the hammer and the question of its suitability were not proper subjects for expert evidence.—Vant Hul v. Great Northern Ry. Co. (Minn.) 789.

§ 12. —— Competency of experts.

On the question of the value of the use of real property in a city, one of the parties, who had occupied the premises for business purposes and was seeking damages for unlawful dispossession, is a competent witness.—Ish v. Marsh (Neb.) 58.

The competency of expert witnesses is within the discretion of the court.—Schmuck v. Hill (Neb.) 158.

Witness *held* qualifie
pert on handwriting.—
(Neb.) 244.

§ 13. —— Examinati

All the undisputed pe
substantially included i
put to expert witnesse
(Neb.) 338.

§ 14. Weight and su

In an action on a note
the officers of a bank to
not bound by their expla
in.—Citizens' Nat. Bank

The rule that plaintif
his case by the perponde
altered by the fact tha
highly discreditable.—S
158.

In a civil proceeding
of evidence is sufficien
(Neb.) 639.

EXAMIN

Of expert witnesses, se
Of person accused of
Law," § 3.
Of witnesses in general

EXCEP

Necessity for purpose
and Error," § 7; "Cri
Taking exceptions at tri

EXCEPTION

Authentication of, for
"Appeal and Error," §
Necessity for purpose
and Error," § 16.
Necessity on appeal or
peal and Error," § 18.
Presumptions on appeal,
peal and Error," § 26.

§ 1. Nature, form,
eral.

Bill of exceptions shou
the facts on which the
questions of law.—State

EXCESSIVE

See "Damages," § 4.

EXC

Regulation of traffic in
"Intoxicating Liquors."

EXECU

See "Attachment"; "G
Sales."
Exemptions, see "Exem

§ 1. Nature and es

Where an attachment
in which defendant do
makes no appearance,
rendered on such proce
the property of the defe
which it was rendered.—
trice (Neb.) 288.

§ 2. Property subje

Pendency of an actio
chattel mortgage, in w
been enjoined from dis
pending the action, does
erty from pursuit by cre
property in the custody
Donley (Neb.) 49.

Digitized by Google

§ 3. Lien, levy or extent, and custody of property.

To authorize a sheriff to make a second appraisement of lands about to be sold under execution, it must affirmatively appear by his return that the property has been twice advertised for sale, and that it remains unsold, as provided by Code, § 495.—Gundry v. Brown (Neb.) 610.

§ 4. Sale.

A grantee in a conveyance fraudulent as to creditors *held*, in an action by creditors to subject land to their claim, entitled to prior lien to the amount paid by him on purchase of such land at an execution sale, after the conveyance to him.—Edwards & Anderson v. Olin (Iowa) 742.

Where a judgment creditor purchases at execution sale, and the judgment is reversed, he must restore the property so purchased on demand of the judgment debtor or his privies. —Nelson v. City of Beatrice (Neb.) 288.

Under Comp. Laws 1887, §§ 5151, 5152, right of judgment debtor or successor in interest to redeem property sold on execution expires at the end of a year from the sale.—Stocker v. Puckett (S. D.) 91.

§ 5. Supplementary proceedings.

To obtain an order for the examination of a judgment debtor, under Code Civ. Proc. § 533, it is sufficient if it appears that execution has been returned unsatisfied. — English v. Smith (Neb.) 60.

EXECUTIVE POWER.

See "Constitutional Law," § 2.

EXECUTORS AND ADMINISTRATORS.

See "Descent and Distribution"; "Wills."
Survival of right of action of person injured, see "Death," § 1.
Testamentary trustees, see "Trusts."

§ 1. Appointment, qualification, and tenure.

Under Code, § 3305, an application for the appointment of an administrator more than five years after decedent's death *held* insufficient to justify the appointment.—Cummings v. Lynn (Iowa) 857.

An alleged creditor of an estate *held* not entitled, after the expiration of five years from decedent's death, to subject realty which had descended to the heirs to her debt by procuring the appointment of an administrator.—Cummings v. Lynn (Iowa) 857.

Where an administrator was appointed without a proper showing, the entire proceeding was void.—Cummings v. Lynn (Iowa) 857.

An order discharging an executrix, without notice to a legatee whose legacy had not been paid, *held* no bar to the legatee's right to the appointment of an administrator de bonis non.—Cole v. Shaw (Mich.) 573.

Where an executrix, who was also residuary legatee, was discharged with the estate remaining in her hands, without having paid a legacy, the legatee was entitled to the appointment of an administrator de bonis non, under Comp. Laws, § 9334.—Cole v. Shaw (Mich.) 573.

§ 2. Collection and management of estate.

An executor cannot devest himself of responsibility regarding his trust by employing an agent to act for him, though the agent employed was is not discharged by returning the principal invested, without accounting for his failure to realize a profit on the investment.—Cheever v. Ellis (Mich.) 1067.

Where by contract with the heir an administrator purchases the heir's interest in the real estate, if the transaction is in good faith it may be treated as a similar transaction between strangers.—Shelby v. Creighton (Neb.) 382.

Where an administrator transfers a past-due note of the estate, and receives the full amount due thereon, and such transfer is afterwards confirmed by the court, the transferee takes a good title.—Holt v. Rust-Owen Lumber Co. (Neb.) 613.

§ 3. Allowances to surviving wife, husband, or children.

Under Comp. Laws, § 9322, subd. 2, where $1,000 was deducted as a widow's allowance from an estate in which the personal property consisted of $15,679.37, a contention that a further allowance of $330 should be made *held* not sustainable.—Maney v. Casserly (Mich.) 478.

§ 4. Allowance and payment of claims.

Where a claim has been filed against an estate, and parties jointly liable are insisting that the estate shall pay the whole debt, such claim is not such a claim as is required to be presented within 12 months.—Pratt v. Fishwild & Williams (Iowa) 1089.

Pleading in the county court, setting up a claim against an estate, *held* not to present a different issue from that raised in the district court on appeal.—Bennett's Estate v. Taylor (Neb.) 669.

The judgment of a district court, on an appeal in the matter of a claim against a decedent's estate, should not award an execution to satisfy the judgment.—Bennett's Estate v. Taylor (Neb.) 669.

Under Rev. St. 1898, § 3844, a mortgagee who does not present his claim against the estate of the deceased mortgage debtor within the time limited therefor cannot, in an action to foreclose the mortgage, recover deficiency judgment. —Pereles v. Leiser (Wis.) 799.

§ 5. Actions.

Where an administrator and the widow fraudulently obtained a settlement of an intestate's estate by concealing funds and the fact that intestate left certain heirs, such heirs *held* entitled to recover their interest by a bill in equity. —Maney v. Casserly (Mich.) 478.

Where, through fraud of an intestate's administrator and his widow, complainants had been deprived of their interest in intestate's estate which had been closed, they were not required to proceed against the widow's estate in the probate court before filing a bill in equity against the administrator.—Maney v. Casserly (Mich.) 478.

The rights of heirs to share in the property of their deceased uncle, as to property concealed by the administrator, but in the reach of the court, *held* not barred by laches.—Maney v. Casserly (Mich.) 478.

Where litigation between an administrator and his brothers resulted in bringing into the estate a large sum of money concealed, heirs who were entitled to share therein *held* liable to contribute to the cost of the litigation.—Maney v. Casserly (Mich.) 478.

Where complainants' rights to certain real estate as heirs were denied by defendants, on sustaining their claim to one-half they were en-

Digitized by Google

of real property from the date their bill was filed until the decree, with interest, less the value of necessary repairs.—Maney v. Casserly (Mich.) 478.

An executor or administrator, under Rev. Codes 1899, §§ 6372, 6461, may bring an action to quiet title to real estate of a decedent, pending administration.—Blakemore v. Roberts (N. D.) 1029.

§ 6. Accounting and settlement.

Where charges of fraud in settlement of an estate are not clearly established, a final settlement and distribution of the estate will not be disturbed.—Smith v. Buchanan (Iowa) 1086.

A will construed, and *held*, that an annuity bequeathed should be treated as a legacy, so as to entitle the annuitant to notice of the allowance of the executor's accounts, under Comp. Laws, § 9441.—Cole v. Shaw (Mich.) 573.

On a final accounting of an executor, various charges of losses sustained by the estate on account of the executor's negligence and want of diligence in managing the affairs of the estate considered, and his account surcharged as to some and relieved as to others.—Cheever v. Ellis (Mich.) 1067.

Annual accountings by an executor, consisting of credits to him and charges against him, will not preclude inquiry into losses of securities resulting from his negligence, on the ground that they were adjudications approving what had been done, and thereby binding the estate.—Cheever v. Ellis (Mich.) 1067.

EXEMPLARY DAMAGES.

See "Malicious Prosecution," § 3.

EXEMPTIONS.

See "Homestead."
From taxation, see "Taxation," § 1.
Of rights in public lands, see "Public Lands," § 1.
Relevancy of evidence as to pecuniary condition of head of family, see "Evidence," § 3.

§ 1. Nature and extent.

Proceeds of a partition sale of real estate cannot be claimed as exempt personal property against one who had taken proper steps to enforce a judgment lien against the land partitioned.—First Nat. Bank v. Snyder (Neb.) 285.

A member of a firm, though the head of a family, cannot claim as exempt any portion of the firm property levied on to satisfy the claims of the creditors.—Lynch v. Englehardt-Winning-Davison Mercantile Co. (Neb.) 524.

§ 2. Transfer or incumbrance of exempt property.

A husband's desertion of his wife did not transfer the title of his exempt property to his wife.—Farmers' & Merchants' Bank v. Hoffman (Neb.) 1044.

Where a husband deserted his wife, leaving standing crops and other personal property which the wife claimed as exempt, *held*, that the taking of security by a creditor from the husband was not per se a fraud on the wife.—Farmers' & Merchants' Bank v. Hoffman (Neb.) 1044.

§ 3. Protection and enforcement of rights.

Evidence *held* to show that an assignment of a judgment was not made in good faith, but for the purpose of evading the exemption laws of the state.—Frieden v. Conkling (Neb.) 615.

Where a husband absconded, and a creditor attached his personal property, and his wife filed a claim of exemption, and the creditor

made did not change t
property from the husba
ers' & Merchants' Ban
1044.

EXHIE

Annexed to pleading, see
Annexing exhibits to de
tions."

EXPERT TE

In civil actions, see "Evi
In criminal prosecutions
§ 9.

EXPRESS C

Wrongful conversion by,
version," § 1.

EXPUL

Of member of church, se
Of member of corporati
§ 4.
Of member of soldiers'
Navy."

EXTEN

Of time for payment c
Notes," § 3.

FACT

See "Brokers"; "Princi

FALSE IMPI

See "Malicious Prosecu

§ 1. Civil liability.

In an action for false
that plaintiff was requi
cuit court, where the
which the case was nol
the subject of probab
Lepovsky (Mich.) 456.

In an action for false
counsel is no defense
in good faith.—Burban
456.

In a prosecution for f
tiff *held* entitled to go
tion of defendant's beli
the time of his arrest.-
(Mich.) 456.

Where, in an action
the county attorney te
were withheld from hi
if he had known, he
the prosecution, and pl
were true, whether the
jury.—Burbanks v. Le

FEDERAL

Conclusiveness of jud
eral and state courts,

FE

As costs, see "Costs,"

In particular acti

See "Garnishment," §
Foreclosure, see "Mort
Probate proceedings, se

Of particular classes o

Garnishees, see "Garni

Digitized by Google

FELLOW SERVANTS.

See "Master and Servant," § 4.

FENCES.

Along railroad tracks, see "Railroads," § 6.
Restraining removal, see "Injunction," § 2.

FILING.

Claims against estate assigned for creditors, see "Assignments for Benefit of Creditors," § 2.
Indictment or presentment, see "Indictment and Information," § 1.
Mechanics' liens, see "Mechanics' Liens," § 1.

FINAL JUDGMENT.

Appealability, see "Appeal and Error," § 3.
Conclusiveness, see "Judgment," § 9.

FINDINGS.

As to limitations, see "Limitation of Actions," § 2.
Harmless error in, see "Appeal and Error," § 29.
On foreclosure, see "Mortgages," § 7.
On reference, see "Reference," § 2.
Presumptions on appeal or writ of error, see "Appeal and Error," § 26.
Review on appeal or writ of error, see "Appeal and Error," §§ 18, 28; "Criminal Law," § 18.
Special findings by jury, see "Trial," § 11.
To sustain judgment, see "Judgment," § 3.

FIRE INSURANCE.

See "Insurance."

FIRES.

See "Negligence," § 1.
Caused by operation of railroad, see "Railroads," § 7.

FISH.

Judgment before a justice of seizure and confiscation of certain fish nets, because illegally used, *held* no defense to the game warden for the destruction of the same.—Neal v. Morse (Mich.) 14.

FOOD.

Pub. Acts 1901, p. 37, No. 22, § 1, does not prevent the manufacture and sale of an article having the appearance of yellow butter, the ingredients of which themselves naturally produce the yellow color.—Bennett v. Carr (Mich.) 26.

FORCIBLE DEFILEMENT.

See "Rape."

FORCIBLE ENTRY AND DETAINER.

See "Landlord and Tenant," § 5.
Review of judgment of justice of the peace, see "Justices of the Peace," § 4.

§ 1. Civil liability.

Proceedings in forcible entry and detainer are not "civil cases," within Const. art. 6, § 17, allowing appeals in all civil cases.—Adkins v. Andrews (Neb.) 228.

Prior to Laws 1901, p. 484, c. 85, no appeal lay to the district court from the judgment of a justice in forcible entry.—Sullivan v. Haight (Neb.) 487.

FORECLOSURE.

Of lien for rent, see "Landlord and Tenant," § 4.
Of mechanic's lien, see "Mechanics' Liens," § 3.
Of mortgage, see "Chattel Mortgages," § 6; "Mortgages," §§ 6–13.
Of tax lien, see "Taxation," § 5.

FOREIGN CORPORATIONS.

See "Corporations," § 8.

FORFEITURES.

For nonpayment of tax, see "Taxation," § 8.
Of dower, see "Dower," § 1.
Of homestead, see "Homestead," § 3.
Of insurance, see "Insurance," §§ 6, 11.
Of mining lease, see "Mines and Minerals," § 1.

FORMER ADJUDICATION.

See "Judgment," §§ 8, 9.

FORMER JEOPARDY.

Bar to prosecution, see "Criminal Law," § 2.

FORMS OF ACTION.

See "Ejectment"; "Replevin"; "Trover and Conversion."

FORNICATION.

See "Seduction," § 1.

FRAUD.

See "Fraudulent Conveyances."
Affecting trust character of conveyance, see "Trusts," § 1.
Effect on limitation, see "Limitation of Actions," § 1.
Ground for appointment of receiver of corporation, see "Corporations," § 7.
Parol evidence as to, see "Evidence," § 9.

By particular classes of persons.

See "Corporations," § 7.

In particular classes of conveyances, contracts, or transactions.

See "Insurance," § 5.
Undertakings, see "Principal and Surety," § 1.

§ 1. Deception constituting fraud, and liability therefor.

Where a wife prevails on her husband, who is fatally ill, to convey his property to her by promising to make a disposition thereof among his heirs, it will be presumed, from her willful failure to make such disposition, that her promise was fraudulent.—Pollard v. McKenney (Neb.) 679.

If an intention not to perform is shown to have existed at the time a promise was made, the promise is fraudulent.—Pollard v. McKenney (Neb.) 679.

§ 2. Actions.

Instruction that good faith is presumed in business transactions, and fraud must be shown.

Digitized by Google

to plaintiff, so as
of the statute of
jury.—Dallavo v

ot to establish a
—Haslam v. Barg

NT CONVEY

'Bankruptcy," §
attels, see "Cha

dence, see "Evi

nd transactio
a daughter for
ly, *held* sufficien
of the mother
ghter, where its
advances made.

rtgage was wit
until March
e mortgagor's
one whose fi
as in April.—
125.

of a small cl
attel mortgag
ot render suc
der fraudulen
or v. Harle-

ide a convey
wledge of a
udulent inte
icipal; such
for the pur
nveyance w
cKittrick I

a bona fid
tion of his
le for frau
not apply
of the de
ditor.—Pop

on to satis
is not v
gman & (

sband an
should be
nglehardt
b.) 524.

ties of

antor to
at it w
tors, a
affirmed

tract to
r with
contrac

and p

bill o
as to
held a
97.

credit
it is
imple
ent.—l

gment
be th
nty

Digitized by Google

Evidence examined, and *held* to sustain finding that grantee was charged with knowledge of fraudulent purpose of grantor in making the deed.—Coffield v. Parmenter (Neb.) 283.

Where an attachment is levied on real estate fraudulently alienated, the attachment creditor acquires a lien which he can enforce after judgment.—Coulson v. Galtsman (Neb.) 349.

FREEDOM OF SPEECH.

See "Constitutional Law," § 3.

FREIGHT.

See "Carriers," § 1.

GAME.

See "Fish."

A person who in good faith has purchased deer and moose skins to tan the same acquires a valid title thereto, and in an action to recover them from the game warden the owner is not required to prove that the animals from which such skins were taken were lawfully killed.—Linden v. McCormick (Minn.) 785.

GAMING.

§ 1. Gambling contracts and transactions.

In an action against a carrier for conversion of a slot machine, *held* no defense that the machine was a gambling device.—Edwards v. American Exp. Co. (Iowa) 740.

It is not necessary that a defendant, who asserts that the contract sued on is a wagering contract, to give notice of his intention to repudiate it.—Merrill v. Garver (Neb.) 619.

On an issue whether a contract for the purchase of 20,000 bushels of wheat was a wagering contract, certain evidence *held* admissible.—Merrill v. Garver (Neb.) 619.

§ 2. Criminal responsibility.

An information under Code Cr. Proc. 1901, § 217, for allowing parties to play games in the saloon of which accused was proprietor, must set out the names of the parties, if known, or allege that they are unknown.—Moore v. State (Neb.) 196.

GARNISHMENT.

See "Attachment"; "Execution."

§ 1. Proceedings to procure.

Under Code, § 207, an affidavit setting out that an insurance company is a corporation in the county and has property of defendant in its possession and control is sufficient.—Metcalf v. Bockoven (Neb.) 406.

§ 2. Proceedings to support or enforce.

The garnishee who appears and answers waives his right to prepayment of fees.—Pope v. Kingman & Co. (Neb.) 519.

Evidence in an action against garnishees for an unsatisfactory answer *held* to sustain verdict for plaintiff.—Pope v. Kingman & Co. (Neb.) 519.

Issuance of execution against attachment debtor and return thereof unsatisfied are not required before proceeding against a garnishee for unsatisfactory answer, under Code Civ. Proc. § 225.—Pope v. Kingman & Co. (Neb.) 519.

§ 3. Liabilities on bonds or undertakings.

Under Rev. St. 1898, § 2771, the defendant and sureties executing the bond for discontinuance of garnishment cannot question, in an action thereon, whether anything was due from the garnishee to defendant.—Wilkinson v. United States Fidelity & Guaranty Co. (Wis.) 560.

In an action on a bond, an answer alleging no knowledge or information sufficient to form a belief whether the judgment had been paid is not sufficient as a plea of payment.—Wilkinson v. United States Fidelity & Guaranty Co. (Wis.) 560.

GIFTS.

Charitable gifts, see "Charities."

§ 1. Inter vivos.

Certain dispositions of testator's property by deed and assignments *held* unenforceable as gifts after his death, for want of delivery in his lifetime.—Clay v. Layton (Mich.) 458.

GOOD FAITH.

Of party asking equitable relief, see "Specific Performance," § 2.

Of purchaser, see "Bills and Notes," § 4; "Vendor and Purchaser," § 4.

GOOD WILL.

Injury to as element of damage for breach of contract for sale of goods, see "Sales," § 7.

GRAND JURY.

See "Indictment and Information."

Refusal to produce books before as contempt, see "Witnesses," § 1.

The proper practice for one summoned to produce books before a grand jury, he claiming parts of them to be immaterial to the issue, stated.—In re Archer (Mich.) 442.

Challenges to individual grand jurors on the ground of prejudice can only be interposed before the jury is sworn.—State v. Ames (Minn.) 330.

Challenges to individual grand jurors for bias cannot be made at the time of arraignment by way of plea in abatement on motion to quash indictment, under Gen. St. 1894, § 7189.—State v. Ames (Minn.) 330.

GRANTS.

Of public lands, see "Public Lands."

GUARANTY.

See "Indemnity"; "Principal and Surety."

Requirements of statute of frauds, see "Frauds, Statute of," § 1.

GUARDIAN AD LITEM.

See "Infants," § 2.

Statutes making guardian ad litem liable for costs against infant as denial of equal protection of laws, see "Constitutional Law," § 5.

Statutes making guardian ad litem liable for costs against infant as infraction of civil rights, see "Constitutional Law," § 3.

GUARDIAN AND WARD.

Action by guardian of incompetent, see "Insane Persons," § 3.

§ 1. Appointment, qualification, and tenure of guardian.

Refusal of judge of probate to confirm the

Digitized by Google

appointment of a testamentary guardian *held* not an abuse of the discretion conferred by 3 Comp. Laws, § 8706.—Ohrns v. Woodward (Mich.) 950.

3 Comp. Laws, § 8706, requiring the appointment of testamentary guardian to be approved by the judge of probate, confers discretionary power on the judge.—Ohrns v. Woodward (Mich.) 950.

Under 3 Comp. Laws, § 8706, a widow *held* not to lose her right to oppose the confirmation of the appointment of testamentary guardian by consenting to the probate of the will.—Ohrns v. Woodward (Mich.) 950.

§ 2. Custody and care of ward's person and estate.

Under a statute authorizing the maintenance of a minor from his estate, a probate order authorizing expenditures *held* not a prerequisite to such allowance.—Hoga's Estate v. Look (Mich.) 439.

§ 3. Sales and conveyances under order of court.

Subsequent proceedings by the guardian in the probate court, to cure defects in a former proceeding authorizing the sale of minors' realty, are not affected by the fact that the clerk of the probate court had demanded of the guardian a new bond.—Mock v. Chalstrom (Iowa) 909.

The probate court, pending proceedings for rescission of a conveyance by minors, pursuant to its decree, may authorize conveyances to cure irregularities in the former proceedings.—Mock v. Chalstrom (Iowa) 909.

It is not contrary to public policy, or fraudulent, for a guardian, before applying for a license to sell the real estate of his ward to procure an intending purchaser for an adequate price.—Hyatt v. Anderson (Neb.) 620.

§ 4. Actions.

The probate court *held* not to have jurisdiction of a proceeding against a ward's estate by an attorney for compensation for services.—Lothrop v. Duffield (Mich.) 577.

§ 5. Accounting and settlement.

The allowance of compensation to a guardian for services is within the discretion of the probate judge.—Hoga's Estate v. Look (Mich.) 439.

HANDWRITING.

Competency of experts, see "Evidence," § 12.
Demonstrative evidence, see "Evidence," § 4.

HARMLESS ERROR.

In civil actions, see "Appeal and Error," § 29.
In criminal prosecutions, see "Criminal Law," § 18; "Homicide," § 4.

HAWKERS AND PEDDLERS.

A city ordinance requiring a license for hawkers and peddlers of teas, coffees, etc., and fixing a license fee at $10 for a week and $50 for a year, is valid.—City of Muskegon v. Zeeryp (Mich.) 502.

Wausau city ordinances licensing transient traders *held* not to apply to a traveling salesman taking orders for goods by sample which he did not sell, which were accepted and filled from his employer's place of business in another city.—City of Wausau v. Heideman (Wis.) 549.

HEAD OF FAMILY.

Relevancy of evidence as to pecuniary condition of, see "Evidence," § 3.

HEALTH.

See "Food."

HEARING.

In foreclosure, see "Mortgages," § 7.
In probate proceedings, see "Wills," § 4.

HEARSAY EVIDENCE.

In civil actions, see "Evidence," § 7.
In criminal prosecutions, see "Criminal Law," § 7.

HEIRS.

See "Descent and Distribution."

HIGHWAYS.

See "Bridges"; "Municipal Corporations," §§ 11, 12.
Accidents at railroad crossings, see "Railroads," §§ 4–7.
Rate of speed of trains crossing streets in municipal corporations, see "Railroads," § 5.
Subject and title of act relating to improvement of, see "Statutes," § 2.

§ 1. Establishment, alteration, and discontinuance.

In an action for trespass to realty, a finding that there was no highway where defendants were alleged to have trespassed *held* supported by the evidence.—Arndt v. Thomas (Minn.) 1125.

Evidence *held* insufficient to show establishment of a highway by consent.—Horn v. Williamson (Neb.) 178.

Evidence *held* insufficient to establish a highway by prescription.—Horn v. Williamson (Neb.) 178.

§ 2. Construction, improvement, and repair.

The consideration for a contract for the construction of roads under Pub. Acts 1865, p. 693, No. 338, *held* payable in lands only.—Olds v. State Land Office Com'r (Mich.) 508.

The joint resolution (Pub. Acts 1887, p. 477, No. 18) authorizing a state road contractor to accept swamp lands, from any not otherwise appropriated in the lower peninsula, in payment for road construction, *held* not in violation of Const. art. 4, § 31, as a grant of extra compensation after the service had been rendered.—Olds v. State Land Office Com'r (Mich.) 508.

Where the claim of a road contractor against the state was payable in state land only, the fact that the land commissioner kept the account of the contractor in dollars, on the basis of land at $1.25 an acre, *held* immaterial.—Olds v. State Land Office Com'r (Mich.) 508.

A provision in a contract for the construction of roads, under Pub. Acts 1865, p. 693, No. 338, that the contractor elected to take his pay in land, *held* inconsequential and nugatory.—Olds v. State Land Office Com'r (Mich.) 508.

In an action to enjoin the construction of a culvert by the county board, the question is whether it was reasonably necessary to a proper maintenance of the road.—Fokenga v. Churchill (Neb.) 143.

It is not necessary for the county board, on directing a road overseer to place a culvert across a highway, to designate the specific point where such culvert is to be placed.—Fokenga v. Churchill (Neb.) 143.

Under Comp. St. 1901, c. 78, §§ 1, 76, the county board has authority to direct a road overseer to place a culvert across a highway in his district.—Fokenga v. Churchill (Neb.) 143.

Digitized by Google

Board of township supervisors *held* not authorized to make contract with plaintiff for repair of road, whereby debt would be created on part of town.—Huston v. Sioux Falls Tp. (S. D.) 88.

Fact that town received the benefit of unauthorized contract *held* not to make it liable thereunder.—Huston v. Sioux Falls Tp. (S. D.) 88.

§ 3. Regulation and use for travel.

Defendant's wrongful act in maintaining a wire fence in a highway *held* not the proximate cause of a traveler's injuries, sustained by reason of his horse shying from the traveled track and into the fence.—Anderson v. Schurke (Iowa) 862.

Laws 1899, p. 406, c. 244, changing the boundaries of a town, and providing for reapportionment of a joint town road, *held* not to affect the liability, as fixed by Rev. St. 1898, § 1273, for an accident occurring after passage of the act, but before the time for reapportionment, on the part of the road theretofore apportioned to another town.—Town of Schoepke v. Wolfgram (Wis.) 556.

HOMESTEAD.

See "Exemptions."

Entry on public lands, see "Public Lands," § 1.

§ 1. Transfer or incumbrance.

Where a contract to convey a homestead was signed only by the husband, and acknowledgment of deed therefor, placed in escrow, was invalid, *held*, that the vendee was not entitled to specific performance.—Watkins v. Youll (Neb.) 1042.

§ 2. Rights of surviving husband, wife, children, or heirs.

Though, under Code, § 2985, on the death of one having a homestead, his heirs hold it exempt, the proceeds of their voluntary sale thereof are not exempt.—Kinzer v. Stephens (Iowa) 858.

Under Rev. St. 1898, §§ 2983, 3862, will *held* only sufficient to charge real estate in excess of decedent's homestead with the payment of debts.—Pym v. Pym (Wis.) 429.

§ 3. Abandonment, waiver, or forfeiture.

Evidence examined, and *held* to show an abandonment of homestead.—McCord, Brady Co. v. Tessier (Neb.) 342.

HOMICIDE.

Admissibility of evidence of acts and declarations of conspirators, see "Criminal Law," § 8.

Admissibility of evidence of other offenses, see "Criminal Law," § 6.

Admissions as evidence, see "Criminal Law," § 7.

Expert testimony, see "Criminal Law," § 9.

Former jeopardy, see "Criminal Law," § 2.

Relevancy of evidence, see "Criminal Law," § 5.

Res gestae, see "Criminal Law," § 5.

§ 1. Evidence.

Where defendant, accused of assault with intent to kill, alleged self-defense, it was error to refuse evidence that shortly after the encounter a club was found at or near the scene.—State v. Cather (Iowa) 722.

On a prosecution for murder, testimony of a physician that he found morphine in the contents of the stomach of the person murdered *held* admissible.—People v. Quimby (Mich.) 1061.

§ 2. Trial.

An instruction in a prosecution for assault with intent to commit murder *held* erroneous for omitting reference to included offenses.—State v. Cather (Iowa) 722.

On a prosecution for murder, an instruction on the defense of insanity *held* not misleading in view of other instructions on the subject.—People v. Quimby (Mich.) 1061.

Where defendant was charged with assault with intent to kill L., a verdict "We, the jury impaneled to try the issues in the above-entitled action, find defendant guilty," *held* not defective.—Lowe v. State (Wis.) 417.

In a prosecution for assault with intent to kill, an instruction *held* not error on the ground that it raised an intent to kill from certain facts as a presumption of law.—Lowe v. State (Wis.) 417.

§ 3. New trial.

A motion for a new trial in a murder case based on the ground of new evidence to support the defense of insanity, to the effect that defendant's sister, since the trial, had been adjudged insane, *held* properly denied.—People v. Quimby (Mich.) 1061.

§ 4. Appeal and error.

Alleged error in instructions for assault with intent to commit murder will not be considered where the verdict is for a lower degree of crime.—State v. Cather (Iowa) 722.

In a prosecution for assault with intent to kill, a ruling limiting cross-examination of a witness *held* harmless.—Lowe v. State (Wis.) 417.

HOUSEBREAKING.

See "Burglary."

HUSBAND AND WIFE.

See "Curtesy"; "Divorce"; "Dower"; "Marriage."

Admissions as evidence in action for alienation of affections, see "Evidence," § 5.

Admissions in pleading in action for alienation of affections, see "Pleading," § 2.

Adultery, see "Adultery."

Competency of plaintiff as witness in action for alienation of wife's affections, see "Witnesses," § 2.

Cross-examination of witnesses in action for alienation of affections, see "Witnesses," § 3.

Right of husband to proceeds of insurance on property of wife, see "Insurance," § 9.

Rights of survivor, see "Descent and Distribution," § 2; "Executors and Administrators," § 3; "Homestead," § 2.

Transactions between, in fraud of creditors, see "Fraudulent Conveyances," § 1.

§ 1. Conveyances, contracts, and other transactions between husband and wife.

The consideration of love and affection will support a deed from husband to wife, no rights of third persons intervening.—Paulus v. Reed (Iowa) 757.

Code, § 3154, *held* to relate to the interest created by the marriage, which the husband or wife has in the lands of the other, and not to any property interest which the husband or wife may have in the land of the other, based on contracts with third persons.—Baird v. Connell (Iowa) 863.

§ 2. Actions.

The district court has power to quiet title in one of the spouses without the concurrence of the other.—Cizek v. Cizek (Neb.) 657.

§ 3. **Separation and separate maintenance.**

An agreement between husband and wife for future separation and for a complete division of their property *held* valid, so far as executed by the husband paying a certain sum for the wife's interest in land.—Baird v. Connell (Iowa) 863.

Under an agreement between husband and wife for future separation and for a division of their property, including a purchase by the husband of the wife's interest in land, the wife *held* estopped from recovering the land without returning the money received therefor.—Baird v. Connell (Iowa) 863.

Under an agreement between husband and wife for future separation and for a division of their property, including a purchase by the husband of a part of the wife's interest in land, the wife *held* estopped from claiming that the money paid by the husband was her own property.—Baird v. Connell (Iowa) 863.

§ 4. **Enticing and alienating.**

In an action for alienation of affections of plaintiff's wife, evidence as to plaintiff's disposition of his children in consequence of his wife's improper conduct was admissible.—Rudd v. Dewey (Iowa) 973.

HYPOTHETICAL QUESTIONS.

To experts, see "Evidence," § 13.

ILLEGITIMATE CHILDREN.

See "Bastards."

IMPAIRING OBLIGATION OF CONTRACT.

See "Constitutional Law," § 4.

IMPEACHMENT.

Of appraisal on foreclosure, see "Mortgages," § 10.
Of record, see "Appeal and Error," § 17.
Of return of process, see "Process," § 1.
Of witness, see "Witnesses," § 4.

IMPLIED CONTRACTS.

See "Account Stated"; "Money Received"; "Work and Labor."

IMPRISONMENT.

See "False Imprisonment."

IMPROVEMENTS.

Liens, see "Mechanics' Liens."
Of highway, see "Highways," § 2.
Public improvements, see "Municipal Corporations," §§ 5–10.

In suit by township against purchaser of land on which township had sunk a well, decree that purchaser reimburse township or transfer the land to it for consideration *held* proper.—Pearl Tp. v. Thorp (S. D.) 99.

IMPUTED NEGLIGENCE.

See "Negligence," § 2.

INCOMPETENT PERSONS.

See "Insane Persons."

INCORPORATION.

See "Corporations," § 1; "Municipal Corporations," § 1.

INCUMBRANCES.

Covenants against, see "Covenants," §§ 1–12.
On homestead, see "Homestead," § 1.
On property devised or bequeathed, see "Wills," § 6.

IN CUSTODIA LEGIS.

Property in custody of the law as subject to execution, see "Execution," § 2.

INDEBTEDNESS.

Of testator, see "Wills," § 6.

INDEMNITY.

See "Principal and Surety."

An indemnity bond, conditioned that the agent of a life insurance company should pay over all moneys which shall come into his hands, *held* to indemnify the company for all loss arising out of any indebtedness then due and owing.—Union Cent. Life Ins. Co. v. Prigge (Minn.) 917.

Sureties on an indemnity bond of an agent *held* discharged from liability for future defaults, where the agent, with knowledge of the insurance company, in violation of his contract, appropriated all moneys collected for more than a year, whereby his indebtedness steadily increased every month, of which the sureties were in ignorance.—Union Cent. Life Ins. Co. v. Prigge (Minn.) 917.

INDICTMENT AND INFORMATION.

See "Grand Jury."

For particular offenses.

See "Bribery"; "Gaming," § 2; "Rape," § 1.

§ 1. **Finding and filing of indictment or presentment.**

Under Code, § 5276, requiring names of witnesses and minutes of testimony in the indictment, defendant *held* not entitled to complain of omission of inconsequential evidence or names of witnesses giving the same.—State v. Hasty (Iowa) 1115.

Code, § 5276, requiring indorsement of names of witnesses on the indictment, *held* to include witnesses whose testimony before the committing magistrate was taken down and submitted to the grand jury.—State v. Hasty (Iowa) 1115.

§ 2. **Requisites and sufficiency of accusation.**

Where a charge in a complaint is substantially the same as that in the information, there is no variance between the complaint and the information.—Van Syoc v. State (Neb.) 266.

§ 3. **Joinder of parties, offenses, and counts, duplicity, and election.**

An information charging a person with larceny *held* not bad for duplicity or uncertainty.—Van Syoc v. State (Neb.) 266.

§ 4. **Motion to quash or dismiss, and demurrer.**

Under Comp. Laws, §§ 11,881, 11,882, relative to objections to grand jurors, certain objections to an indictment *held* not available.—People v. Salsbury (Mich.) 936.

Digitized by Google

Rev. Codes 1899, § 8082, specifies the only grounds under which an indictment may be set aside on motion.—State v. Tough (N. D.) 1025.

§ 5. Conviction of offense included in charge.

An indictment for burglary in the third degree, for breaking and entering a railroad car with intent to steal, as defined in Rev. Codes 1899, § 7406, will sustain a conviction of a minor offense, defined by section 7411, of entering a railroad car with intent to steal.—State v. Tough (N. D.) 1025.

INDORSEMENT.

Of bill of exchange or promissory note, see "Bills and Notes," § 4.

Of names of witnesses on indictment, see "Indictment and Information," § 1.

INFANTS.

See "Guardian and Ward."

Contributory negligence on part of children, see "Negligence," § 2.

Statutes making guardian ad litem liable for costs against infant as denial of equal protection of laws, see "Constitutional Law," § 5.

Statutes making guardian ad litem liable for costs against infant as infraction of civil rights, see "Constitutional Law," § 3.

§ 1. Contracts.

An exchange of a minor's rights under a land contract for certain horses *held* not a disaffirmance of the land contract, so as to preclude the minor, on a subsequent disaffirmance, from recovering more than he had paid on such contract.—Beickler v. Guenther (Iowa) 895.

Where a minor disaffirmed a contract for the purchase of certain lots, he was entitled to recover the market value of the lots at the time of disaffirmance, less the amount owing on the contract, with interest.—Beickler v. Guenther (Iowa) 895.

Under Code, § 3189, a minor *held* not bound to restore property which he had parted with during minority, received under a contract, as a condition to his right to disaffirm the contract under which it was received.—Beickler v. Guenther (Iowa) 895.

Where a minor received a team in settlement of a contract for the purchase of real estate, and thereafter, on disaffirming the same, offered in writing to return the team, such offer, in the absence of acceptance, was equivalent to an actual tender of the property.—Beickler v. Guenther (Iowa) 895.

Facts *held* insufficient to show that a minor was "engaged in business," within Code, § 3190, so as to preclude him from rescinding a purchase of certain lots while he was still a minor.—Beickler v. Guenther (Iowa) 895.

§ 2. Actions.

Under Rev. St. 1898, §§ 2920, 2931, a judgment for defendant for costs in an action by an infant should be rendered against the infant, and is enforceable against his guardian ad litem, without determination of the question of the guardian's liability.—Burbach v. Milwaukee Electric Ry. & Light Co. (Wis.) 829.

INFORMATION.

Criminal accusation, see "Indictment and Information."

INFRINGEMENT.

Of trade-mark, see "Trade-Marks and Trade-Names," § 1.

INHERITANCE.

See "Descent and Distribution."

INHERITANCE TAX.

See "Taxation," § 9.

INJUNCTION.

Appealability of order dissolving temporary injunction, see "Appeal and Error," § 3.

In foreclosure proceedings, see "Chattel Mortgages," § 6.

Restraining particular acts or proceedings.

Construction of culvert, see "Highways," § 2.

Enforcement of judgment, see "Judgment," § 6.

Infringement of trade-mark, see "Trade-Marks and Trade-Names," § 1.

Interference with attendance of pupil at school, see "Schools and School Districts," § 1.

Interference with water rights, see "Waters and Water Courses," § 1.

Trespass on mining property, see "Mines and Minerals," § 1.

§ 1. Nature and grounds in general.

A bill to restrain a drain commissioner from proceeding to widen a drain *held* not sustainable, in the absence of any allegation of trespass threatened or committed; Comp. Laws, §§ 4320, 4323, 4325, 4345, 4346, providing an adequate remedy.—Strack v. Miller (Mich.) 452.

The court, having assumed jurisdiction of a suit to enjoin enforcement of an order, may, defendant having pleaded to the merits, grant the relief, though adequate relief might be obtained at law.—Lothrop v. Duffield (Mich.) 57[illegible].

§ 2. Subjects of protection and relief.

In a suit for injunction to restrain removal of a fence, contention that, though plaintiff was a trespasser in erecting the fence, jurisdiction should be retained because the suit had sought to try title, etc., *held* without merit.—Currier v. Jones (Iowa) 766.

One who had erected a fence on an alleged boundary, which fence had been removed by the other owner, in peaceable possession, *held* not entitled to seek an injunction.—Currier v. Jones (Iowa) 766.

A bill to enjoin a person from divulging trade secrets acquired while in complainant's employ *held* maintainable against such employé, without joining complainant's competitors as parties.—Sanitas Nut Food Co. v. Cemer (Mich.) 454.

§ 3. Preliminary and interlocutory injunctions.

A prior ruling of a district judge, vacating a temporary injunction on the ground that petition does not state a cause of action, does not preclude another judge, on final hearing, from rendering a decree in accordance with its prayer.—Commercial State Bank v. Ketchum (Neb.) 614.

§ 4. Violation and punishment.

It is no defense to a charge of contempt of court in violating an injunctional order that the party accused acted in good faith.—Young v. Rothrock (Iowa) 1105; Same v. Chadima Bros., Id.

It is no defense to a charge of contempt in violating an injunctional order to show that the judge issuing it orally construed it so as to permit the person enjoined to do the acts restrained.—Young v. Rothrock (Iowa) 1105; Same v. Chadima Bros., Id.

A party to a suit, who violated the injunction issued therein, could not excuse the violation by showing that he had filed a motion to

Digitized by Google

dify it.—Young v. Rothrock (Iowa) 1105; me v. Chadima Bros., Id.

An order restraining defendant *held* violated him.—Young v. Rothrock (Iowa) 1105; me v. Chadima Bros., Id.

5. Liabilities on bonds or undertakings.

Plaintiff, having a right to an injunction ien it issued, is not liable on his bond, ough, because of subsequent condemnation oceedings, the injunction is dissolved.—Scott Frank (Iowa) 764.

IN PAIS.

stoppel, see "Estoppel," § 2.

INSANE PERSONS.

ffect of insanity on limitations, see "Limitation of Actions," § 1.
nstructions as to insanity of accused, see "Criminal Law," § 15; "Homicide," § 2.
pinion evidence as to insanity of accused, see "Criminal Law," § 9.
estamentary capacity, see "Wills," § 1.

1. Custody and support.

Rev. Pol. Code 1903, §§ 2810, 2812, relating "legal settlement" acquired by insane persons, *held* to mean a settlement acquired by esidence of 90 days in a county, as defined by ection 2764, relating to settlements acquired y "poor and indigent persons."—In re Bigelow S. D.) 698; Moody County v. Minnehaha County, Id.

2. Property and conveyances.

Neither the county court, nor a person under guardianship because of insanity, nor the guardian of the latter, nor all of them together, can ratify a conveyance of lands by the ward while he was insane.—Gingrich v. Rogers (Neb.) 156.

The deed of an insane person may be avoided as against a grantee for value without notice.—Gingrich v. Rogers (Neb.) 156.

§ 3. Actions.

In action by the guardian of an incompetent to set aside his conveyance because of unsoundness of mind, the burden is on him to show such mental condition.—Paulus v. Reed (Iowa) 757.

The burden of showing that a conveyance was made by an insane person during a lucid interval is on the party claiming under the deed.—Gingrich v. Rogers (Neb.) 156.

INSANITY.

Effect of insanity on limitations, see "Limitation of Actions," § 1.
Instructions as to insanity of accused, see "Criminal Law," § 15; "Homicide," § 2.
Opinion evidence as to insanity of accused, see "Criminal Law," § 9.

INSOLVENCY.

See "Assignments for Benefit of Creditors"; "Bankruptcy."
Of bank, see "Banks and Banking," § 1.
Of corporation, see "Corporations," § 7.

INSPECTION.

Of place to work, customs as to, see "Customs and Usages."

INSTRUCTIONS

In civil actions, see "Trial," §§ 5
In criminal prosecutions, see "
§ 15; "Homicide," § 2.

INSURANCE.

Consideration on appeal of qu
policy was canceled by mutu
"Appeal and Error," § 23.
Of premises demised, see "Land
ant," § 3.

§ 1. Insurance companies.

While promoters of a mutual
pany are authorized and require
plications for $200,000 of insura
company is organized, they have
to bind it by any contract before
and authorized to do business.—
Whitbeck (N. D.) 327.

An insurance policy signed with
the president and secretary of
and delivered to the applicant fo
before the corporation has come
is not enforceable against it afte
—Montgomery v. Whitbeck (N.

§ 2. Insurance agents and

A recognition by defendant in
pany of authority of its agent to
transaction involving the procuri
on plaintiff's life and the accep
agent, as agent, of certain stoc
therefor, *held* a ratification of the
binding.—Cameron v. Mutual Life
(Iowa) 961.

§ 3. The contract in general

The depositing of a policy by
the post office, properly addressed
ance applicant, with postage prep
delivery of the policy.—Armstron
Life Ins. Co. (Iowa) 954.

A party to a contract with a
ance company, made in violation
under which it was organized, *h*
ped to show the illegality of the
thus prevent a recovery upon it.-
v. Whitbeck (N. D.) 327.

Where all policy holders in a mu
are on the same footing, none ha
superior to his associates growin
business done in defiance of statu
ments, no estoppel will be indulge
member asserting the ultra vires n
business.—Montgomery v. Whitb
327.

Persons applying for insurance
ship in a mutual company must t
the laws of the state under which
ized and authorized to do busines
ery v. Whitbeck (N. D.) 327.

The statute under which a mutu
company is organized, its by-laws
of incorporation, the application f
and the policy, each becomes part
tract of insurance, and binding up
ber.—Montgomery v. Whitbeck (N

§ 4. Premiums, dues, and asse

In an action for premium paid o
predicated on fraud in connection
plication, evidence as to the subse
up of the policies *held* admissible a
the question whether the policies w
in a reasonable time.—Armstrong v.
Ins. Co. (Iowa) 954.

In an action for premium paid
which it was claimed was not deliv
struction relating to delivery in a
time is erroneous.—Armstrong v. 1
Ins. Co. (Iowa) 954.

Digitized by Google

In an action for premium paid on insurance, predicated on fraud in procuring the application, an instruction as to delivery of the policies in a reasonable time *held* erroneous.—Armstrong v. Mutual Life Ins. Co. (Iowa) 954.

In an action for premium paid on insurance, an instruction considered, and *held* too vaguely expressed, if intended to present a proposition as to cancellation of the policies.—Armstrong v. Mutual Life Ins. Co. (Iowa) 954.

In an action for premium paid on insurance, an instruction relating to defendant's treating the policy as not in force *held* erroneous, as not supported by the evidence.—Armstrong v. Mutual Life Ins. Co. (Iowa) 954.

In an action for premium paid on insurance, predicated on fraud in connection with the application, an instruction considered, and *held* erroneous, as ignoring the issue of fraud in securing the application.—Armstrong v. Mutual Life Ins. Co. (Iowa) 954.

Disregard of statutory requirements in the issuance of policies *held* to render them void, so that no assessment for losses could be enforced thereunder.—Montgomery v. Whitbeck (N. D.) 327.

§ 5. Avoidance of policy for misrepresentation, fraud, or breach of warranty or condition.

It was not the duty of insured, in applying for insurance, to advise the company of every time he had consulted a physician for temporary indispositions.—Blumenthal v. Berkshire Life Ins. Co. (Mich.) 17.

Evidence in action on a policy of insurance *held* insufficient to justify recovery on the policy.—Farmers' & Merchants' Ins. Co. v. Hahn (Neb.) 255.

§ 6. Forfeiture of policy for breach of promissory warranty, covenant, or condition subsequent.

Where, in an application for insurance, the property is described as in possession of a tenant, a provision as to vacancy *held* not violated by the removal of a tenant in possession to allow the entry of another tenant.—Union Ins. Co. of Lincoln v. McCullough (Neb.) 79.

A stipulation in a policy that it should not be binding unless the premium was paid before the loss *held* reasonable.—German Ins. Co. v. Shader (Neb.) 604.

A conveyance of property in violation of restrictions in an insurance policy is unimportant, if the property is reconveyed before loss.—German Mut. Fire Ins. Co. v. Fox (Neb.) 652.

A conveyance of real estate by one joint owner to the other, which has been insured in their joint names, is not a violation of a clause prohibiting sale or transfer.—German Mut. Fire Ins. Co. v. Fox (Neb.) 652.

Where a loss occurred while plaintiff was in default on first premium note, the default, unless waived, *held* to suspend the insurance.—Hooker v. Continental Ins. Co. (Neb.) 663.

§ 7. Estoppel, waiver, or agreements affecting right to avoid or forfeit policy.

In an action on an insurance policy, instruction as to waiver of conditions *held* proper.—German Ins. Co. v. Stiner (Neb.) 122.

§ 8. Risks and causes of loss.

That an insured building was burned by a third party is no defense to an action on the policy.—Union Ins. Co. of Lincoln v. McCullough (Neb.) 79.

§ 9. Right to proceeds.

That the husband of a married woman signs with her an application for insurance on her separate property does not give him any interest in the policy.—Union Ins. Co. of Lincoln v. McCullough (Neb.) 79.

§ 10. Actions on policies.

Under Code, § 3499, an action on a contract relating to insurance, although involving other matters, may be brought against the company in the county wherein it was made.—Cameron v. Mutual Life & Trust Co. (Iowa) 961.

Under Code, § 3499, an indivisible contract involving the taking out of a policy of insurance on plaintiff's life, a sale thereof by defendant company, and the payment to the latter by plaintiff of certain shares of stock, *held* a contract of insurance, although involving other matters, and properly sued on in county where made.—Cameron v. Mutual Life & Trust Co. (Iowa) 961.

In an action on an insurance policy, a charge misquoting "or" as "an" in the question asked of insured in his application, *held* not error.—Blumenthal v. Berkshire Life Ins. Co. (Mich.) 17.

A party cannot allege full compliance with conditions of a policy, and on the trial prove that, while the conditions were not complied with, they had been waived.—German Ins. Co. v. Shader (Neb.) 604.

Where a policy provides that it shall not be enforceable if the premium is not paid, a waiver must be pleaded and proved.—German Ins. Co. v. Shader (Neb.) 604.

Where, in an action on an insurance policy, defendant alleged failure to pay the premium, *held*, under the evidence, error to direct a verdict for plaintiff.—Farmers' & Merchants' Ins. Co. v. Graff (Neb.) 605.

An instruction in an action on an insurance policy *held* properly refused, where the insurance was for $200 on horses, and the instruction would authorize a verdict for the total value of the horses killed, which the proof showed to be $240.—Hooker v. Continental Ins. Co. (Neb.) 663.

In an action on an insurance policy, defended for nonpayment of an overdue premium, no evidence *held* to support verdict for defendant.—Hooker v. Continental Ins. Co. (Neb.) 663.

An instruction that the burden is on plaintiff to prove every material allegation of his petition by a preponderance of the evidence is proper.—Hooker v. Continental Ins. Co. (Neb.) 663.

An instruction, in an action to recover on an insurance policy, that plaintiff must show that the horses killed by lightning were covered by the policy, was proper.—Hooker v. Continental Ins. Co. (Neb.) 663.

Evidence in an action on an accident policy *held* to support a verdict that death resulted from the accident, as claimed.—Woodmen Acc. Ass'n v. Hamilton (Neb.) 989.

An allegation of settlement of all claims which a certificate holder in an accident association had or might have, without reference to the beneficiary, in a suit by the beneficiary for the death of the insured from the same accident, does not refer to the subsequent death of the insured and states no defense to the death claim beyond the payment alleged.—Woodmen Acc. Ass'n v. Hamilton (Neb.) 989.

§ 11. Mutual benefit insurance.

In an action on a benefit certificate, a circular issued by defendant, but not referred to in the certificate, *held* inadmissible.—Sleight v. Supreme Council of Mystic Toilers (Iowa) 1100.

In an action on a benefit certificate, a circular, not identified as coming from defendant and not relied on by insured, *held* inadmissible.—Sleight v. Supreme Council of Mystic Toilers (Iowa) 1100.

Digitized by Google

y-law
bers o
by
aws
ociati
cordin
v.

"Fr

see "

see "P

s, se

es," §
Note
§§ 4, 8

n gex
plevin
e of p
, is a
is aut
om th
artin

intere
on a
est fr
to a
nt to
ghton

turity
s a su
t.—Ch

NT.

CTIO

MEN

ror,"

RCE.

RS.

of ac

cann
place

Digitized by Google

described in the bond.—O'Banion v. DeGarmo (Iowa) 739.

Where a protest was addressed to a board empowered to grant saloon licenses, *held*, that the protest was filed in the proper office within the meaning of the law, and under Comp. St. 1901, c. 50, § 3, it was the duty of the board to appoint a day for hearing the case.—Moores v. State (Neb.) 225.

INTOXICATION.

Opinion evidence as to intoxication of accused, see "Criminal Law," § 9.

INVESTMENT.

Of funds of decedent's estate, see "Executors and Administrators," § 2.
Of school district funds, see "Schools and School Districts," § 1.

IRRIGATION.

See "Waters and Water Courses," § 1.

ISSUES.

Presented for review on appeal, see "Appeal and Error," § 5.

JAILS.

See "Prisons."

JEOPARDY.

Former jeopardy bar to prosecution, see "Criminal Law," § 2.

JOINDER.

Of causes of action, see "Action," § 1.
Of offenses in indictment, see "Indictment and Information," § 3.
Of parties in proceedings for new trial, see "New Trial," § 3.

JUDGES.

See "Courts"; "Justices of the Peace."
Mandamus to judge, see "Mandamus," § 2.
Remarks and conduct of, at trial, see "Criminal Law," § 13; "Trial," § 1.
Signature to judgment, see "Judgment," § 4.

§ 1. Appointment, qualification, and tenure.

A police magistrate is a district officer, within the provision of Const. art. 16, § 13, for the election of all district officers at the general election.—State v. Moores (Neb.) 1011.

Where relator was elected police judge for two years in 1896, regular elections for police magistrates in the district comprising the city in which he was elected should be held every two years thereafter.—State v. Moores (Neb.) 1011.

Under Const. Bill of Rights, § 22, the electors of Omaha were not deprived of their right to elect a police magistrate at the election provided in the Constitution for that purpose by a failure of the Legislature to make any special provision for such election.—State v. Moores (Neb.) 1011.

§ 2. Rights, powers, duties, and liabilities.

A court presided over by the successor of a deceased judge can grant or deny a motion for new trial in a case tried by the deceased while in office.—Union Pac. R. Co. v. Lotway (Neb.) 527.

JUDGMENT.

Decisions of courts in general, see "Courts," § 1.
Effect as curing defects in pleadings, see "Pleading," § 8.
Enforcement by creditors' suit, see "Creditors' Suit."
Interest on judgments, see "Interest," § 1.
Review, see "Appeal and Error."
Review of discretion of court in vacation of judgment, see "Appeal and Error," § 27.
Sales under judgment, see "Judicial Sales."
Variance between name in process and judgment, see "Names."

In actions by or against particular classes of parties.

See "Executors and Administrators," § 5; "Sheriffs and Constables," § 2.

In particular civil actions or proceedings.

See "Divorce," § 3; "Replevin," § 3.
Foreclosure, see "Mortgages," § 7.
On appeal or writ of error, see "Appeal and Error," § 31.
Personal judgment for deficiency on foreclosure, see "Mortgages," § 11.
Probate proceedings, see "Wills," § 4.
To establish trust, see "Trusts," § 4.

§ 1. Nature and essentials in general.

Where the attempted service fails to reach the party to be served in any way, a judgment founded thereon is absolutely void.—Baldwin v. Burt (Neb.) 401.

§ 2. By default.

Evidence of fraud in the entry of a judgment by default *held* insufficient to justify a vacation thereof.—Johnson, Lane & Co. v. Nash-Wright Co. (Iowa) 760.

On an application to set aside a judgment against a defendant for fraud, under Code, § 4091, the burden of proof of fraud and of a sufficient defense is on the defendant.—Johnson, Lane & Co. v. Nash-Wright Co. (Iowa) 760.

An attorney's opinion that defendant had a good defense to an action and a good counterclaim, without any facts stated constituting a defense, *held* insufficient to authorize the vacation of a default judgment.—Johnson, Lane & Co. v. Nash-Wright Co. (Iowa) 760.

An answer setting up a counterclaim on an application to set aside a default judgment *held* an insufficient statement of a defense, within Code, § 4091.—Johnson, Lane & Co. v. Nash-Wright Co. (Iowa) 760.

On an application to vacate a judgment by default, where it fairly appears from the papers that the moving party has a good cause of action, the necessity of affidavit of merits is for the court.—Crane & Ordway v. Sauntry (Minn.) 794.

Held not an abuse of discretion to set aside a judgment of dismissal on terms.—Crane & Ordway v. Sauntry (Minn.) 794.

Where a personal judgment is rendered against a defendant on a cross-petition in which no relief is prayed against him, it is error to refuse to vacate such judgment.—Koehler v. Reed (Neb.) 380.

A default, by a party properly served, is a confession only of facts properly pleaded.—Carnahan v. Brewster (Neb.) 590.

§ 3. On trial of issues.

Where the pleadings are sufficient to bring the subject-matter of an action before the court, the decree cannot be attacked for want of findings.—Cizek v. Cizek (Neb.) 657.

A motion for judgment notwithstanding the verdict will not be sustained where there is an

Digitized by Google

issue under the evidence for the jury.—Nelson v. Grondahl (N. D.) 299.

On a motion for judgment notwithstanding the verdict, a new trial will not be awarded or error considered which can only be remedied by new trial, where the moving party failed to unite with his motion a request for the alternative of a new trial.—Pine Tree Lumber Co. v. City of Fargo (N. D.) 357.

§ 4. Entry, record, and docketing.

Code, § 3777, relating to the clerk entering judgment on the verdict of a jury, *held* directory merely.—Bevering v. Smith (Iowa) 1110.

The signature of a presiding judge to a decree is not essential to its validity.—Gallentine v. Cummings (Neb.) 178.

Every change by the clerk in a journal entry previously approved by the court is void, unless made, under Code Civ. Proc. § 604, by motion after notice.—Fisk v. Osgood (Neb.) 237.

Courts have inherent power to enter judgments or decrees nunc pro tunc.—Fisk v. Osgood (Neb.) 237.

§ 5. Opening or vacating.

A proposed answer containing a mere general denial *held* an insufficient statement of a defense to an action to sustain a proceeding to vacate a judgment, under Code, § 4091.—Johnson, Lane & Co. v. Nash-Wright Co. (Iowa) 760.

Where a party served by publication seeks to avoid a judgment, he must tender an answer with his application to vacate, showing a valid defense.—Waters v. Raker (Neb.) 78.

Where plaintiff seeks to enforce a void judgment, one who merely resists is not governed by the rule requiring a party seeking relief against such a judgment to show a meritorious defense.—Baldwin v. Burt (Neb.) 401.

Code Civ. Proc. § 602, subd. 3, providing for the vacating of judgments, applies only to voidable judgments.—Baldwin v. Burt (Neb.) 401.

Trial court *held* entitled of its own motion to set aside a judgment which was the result of a series of erroneous rulings at the same term at which the judgment was entered, though the judgment was entered after mature deliberation.—Smith v. Milwaukee Electric Ry. & Light Co. (Wis.) 823.

§ 6. Equitable relief.

A proceeding to vacate a judgment under Code, §§ 4091, 4094, 4095, is by petition in the original action and by suit in equity.—Johnson, Lane & Co. v. Nash-Wright Co. (Iowa) 760.

Where a party has procured a judgment, his right to have the benefit of it, or to the privilege of defending it in the Supreme Court, should not be denied him by granting a petition in equity, except in an extraordinary case.—Langan v. Parkhurst (Neb.) 63.

Equity will not relieve against a judgment at law, unless complainant shows a defense on the merits and diligence.—Dorwart v. Troyer (Neb.) 116.

Evidence *held* sufficient to show that a judgment entered by default was entered through an excusable misunderstanding on the part of defendant's attorneys.—MacCall v. Looney (Neb.) 238.

A misunderstanding between attorneys *held* a sufficient ground for setting aside a default judgment on petition after the term.—MacCall v. Looney (Neb.) 238.

The provisions of Code Civ. Proc. § 602, guaranteeing relief against a judgment after the term, are concurrent with equity jurisdiction.—MacCall v. Looney (Neb.) 238.

The recording of a deed not referring to a finding and decree does not set in motion limitations as against an action to set a decree.—Cushing v. Schoeneman (Neb

A party against whom judgment rendered by default is not entitled junction to restrain its collection, has a meritorious defense and no remedy at law.—Koehler v. Reed (Neb

Where a decree enjoining a judgm tions the injunction on payment into sum more than sufficient to satisfy an lien, it is unnecessary to consider th priorities of the right to a set-off an torney's lien. — Commercial State Ketchum (Neb.) 614.

Insolvency of the judgment creditor for a suit by a judgment debtor to e lection of the judgment for the purpo forcing a set-off.—Commercial State Ketchum (Neb.) 614.

Equity will not grant relief again fault judgment, where the applicant served and negligently failed to app Hale v. Metz (Neb.) 1004.

§ 7. Collateral attack.

A judgment rendered by a court jurisdiction is void.—Thornily v. Prenti 728.

A judgment cannot be collaterally where the only objection against a service is the fact that it was not ve the deputy.—Muchmore v. Guest (Neb.)

Where the court had jurisdiction of ties and the subject-matter, its decre open to collateral attack.—Cizek v. Ciz 657.

§ 8. Merger and bar of causes of and defenses.

A judgment establishing the invalidi election attempted to be made at the election in 1899 *held* not res judicata power to hold an election at the general in 1901.—State v. Moores (Neb.) 1011.

An action by an employé under an en tract of employment, after his wrong charge, for a month's salary, *held* an el remedies, precluding a subsequent rec further damages.—Ornstein v. Yahr & Drug Co. (Wis.) 826.

§ 9. Conclusiveness of adjudicat

Where the question as to whether bonds created an indebtedness against was determined in a former action i other indebtedness, the decision is res in a subsequent action between the sa ties.—Reynolds v. Lyon County (Iowa)

Where a federal court and a state co concurrent jurisdiction over matter i the adjudication of one is binding on th —Reynolds v. Lyon County (Iowa) 109

A final order or decree is conclusive i sequent action between the same partie matters adjudicated.—Agnew v. Omah Bank (Neb.) 189.

Where a suit is dismissed as to one defendants without prejudice, it leaves s fendant as if he had never been a part action.—Agnew v. Omaha Nat. Bank 189.

Where plaintiff alleged a partnership, preliminary decree found that it exist reserved the case for an accounting, a defendant was dismissed out of the ca that, in a subsequent action between and the defendant dismissed, the latt not concluded by the preliminary decre new v. Omaha Nat. Bank (Neb.) 189.

Where, before dismissal as to one of defendants, there has been a decision of several issues which does not fix t bility of the defendant who is subsequen

Digitized by Google

missed, such preliminary decree is not res judicata.—Agnew v. Omaha Nat. Bank (Neb.) 189.

To make an order final and conclusive in a subsequent action, it must have been a complete disposition of the matter in controversy.—Agnew v. Omaha Nat. Bank (Neb.) 189.

Where a second suit is upon the same cause of action and between the same parties as the first, the judgment in the former is conclusive as to every question which was or might have been litigated.—Schlemme v. Omaha Gas Mfg. Co. (Neb.) 644.

A judgment on a question directly involved in one suit is conclusive in another suit between the same parties.—Schlemme v. Omaha Gas Mfg. Co. (Neb.) 644.

A mortgagee of cattle cannot, in a proceeding under the herd law (Comp. St. 1901, c. 2, art. 3, §§ 1, 2), be bound by an award made without giving him a hearing.—Goff v. Byers Bros. & Co. (Neb.) 1037.

Withdrawal of a claim of a judgment creditor against an insolvent's estate pending a reference, and subsequent dismissal by reason thereof, *held* not res judicata of the validity of such claim.—Fischbeck v. Mielenz (Wis.) 426.

§ 10. Assignment.

Where, at the date of an assignment of certain judgments and a transfer of property purchased thereunder, the judgments had been nearly paid, the assignee only acquired the rights of the assignor as of the date of the transfer.—Fischbeck v. Mielenz (Wis.) 426.

§ 11. Actions on judgments.

A petition in an action on a judgment, alleging that it is absolute, sufficiently alleges that it is operative and effective.—Brown v. Helsley (Neb.) 187.

Evidence in an action on a judgment of the county court against a decedent in his lifetime *held* to sustain verdict for plaintiff.—Wolcott's Estate v. McCormick Harvesting Mach. Co. (Neb.) 216.

JUDICIAL NOTICE.

In civil actions, see "Evidence," § 1.

JUDICIAL SALES.

Of property of infant, see "Guardian and Ward," § 3.
On execution, see "Execution," § 4.

The notice of a judicial sale should contain such a description as to inform the public of the nature of the property to be sold.—Morrison v. Lincoln Sav. Bank & Safe-Deposit Co. (Neb.) 230.

JURAT.

Of officer taking affidavit, see "Affidavits."

JURISDICTION.

Collateral attack on judgment for want of jurisdiction, see "Judgment," § 7.
Effect of appearance, see "Appearance."

Jurisdiction of particular actions or proceedings.

Against estate of ward, see "Guardian and Ward," § 4.
For breach of covenant, see "Covenants," § 3.
Probate proceedings, see "Wills," § 4.
Relief against judgment, see "Judgment," § 6.

Jurisdiction of particular subjects.

Determination of liability of heirs for debts of intestate, see "Descent and Distribution," § 3.

Special jurisdictions.

Appellate jurisdiction, see "Appeal and Error," § 2.
Justices' courts in civil cases, see "Justices of the Peace," § 2.
Particular courts, see "Courts."

JURY.

See "Grand Jury."
Charge on duties of, see "Criminal Law," § 14.
Custody and conduct, see "Criminal Law," § 17; "Trial," § 10.
Instructions in civil actions, see "Trial," §§ 5-10.
Instructions in criminal prosecutions, see "Criminal Law," § 15.
Questions for jury in criminal prosecutions, see "Criminal Law," § 14.
Questions of fact for jury, see "Trial," § 4.
Taking case or question from jury at trial, see "Trial," § 4.
Verdict in civil actions, see "Trial," § 11.

§ 1. Competency of jurors, challenges, and objections.

Under Code, § 5360, providing for challenges for cause in criminal cases, the relation of attorney and client between veniremen and county attorney *held* no ground for challenge for cause.—State v. Carter (Iowa) 710.

Facts *held* to require a challenge to a juror for having a formed opinion to be sustained.—State v. Crofford (Iowa) 889.

Under Comp. Laws, § 11,947, the court properly overruled a juror's challenge for cause.—People v. Quimby (Mich.) 1061.

JUSTICES OF THE PEACE.

§ 1. Civil jurisdiction and authority.

An action to recover one-half of a specific sum alleged to have been fraudulently withheld from the partnership settlement *held* maintainable before a justice of the peace.—Erret v. Pritchard (Iowa) 963.

§ 2. Procedure in civil cases.

In an action before a justice, *held* that the pleadings were closed on filing of a reply by plaintiff, and defendant was entitled as a matter of right to a continuance not exceeding one week, under Gen. St. 1894, § 4990.—Kennedy v. Kellum (Minn.) 792.

§ 3. Review of proceedings.

Where defendant did not appear generally in justice court, but did appear in the circuit court on appeal, and there by leave of court filed the plea of the general issue, *held* that he would have to give notice of a defense not admissible under the general issue, as required by circuit court rule 7 (3) in a case begun in the circuit court.—Ward v. Reed (Mich.) 438.

Prior to Laws 1901, p. 484, c. 85, no appeal to the district court lay from a judgment in forcible entry and detainer of a justice.—Sullivan Transfer Co. v. Paska (Neb.) 163.

An appeal from the judgment of a justice will not be dismissed because appellant failed to file a transcript within 30 days from the judgment, where such failure was not through the fault of the appellant.—Hagadorn v. Wagoner (Neb.) 184.

Where plaintiff appealed from the judgment of a justice, and defendant moved the district court to dismiss the appeal because the transcript was not complete, the proper procedure was a suggestion of diminution of the record.—Wolcott's Estate v. McCormick Harvesting Mach. Co. (Neb.) 216.

It is not error for a district court to deny a motion to dismiss an appeal from a justice court, taken upon questions of law only, where

Digitized by Google

ie appeal has been regularly taken and perected, and the grounds of the motion relate to regularities in the proceedings in the justice ourt which do not affect the district court's urisdiction of the appeal.—Olson v. Shirley (N. D.) 297.

Under Rev. Codes 1899, § 6771a, *held*, that he effect of reversing a justice's judgment dismissing plaintiff's action was to reopen the ase, so as to render proper a hearing on the nerits in the district court.—Olson v. Shirley N. D.) 297.

KNOWLEDGE.

Actual or constructive knowledge, see "Notice."
By grantee of fraud in conveyance, see "Fraudulent Conveyances," § 1.
Effect of ignorance of cause of action on limitation, see "Limitation of Actions," § 1.
Of custom, see "Customs and Usages."

LACHES.

Effect in equity, see "Equity," § 1.
In action on note, see "Bills and Notes," § 6.
In proceedings for probate, see "Wills," § 4.
Of claimant to public lands, see "Public Lands," § 1.

LAKES.

See "Waters and Water Courses," § 3.

LANDLORD AND TENANT.

Leases of public lands, see "Public Lands," § 1.
Mandamus to review proceedings to procure licenses, see "Mandamus," § 2.
Mining leases, see "Mines and Minerals," § 1.
Specific performance of lease, see "Specific Performance," § 1.

§ 1. Landlord's title and reversion.

A city, having easement only in certain lots conveyed to it for levee purposes, its lease of the same for building purposes *held* void.—Sanborn v. Van Duyne (Minn.) 41.

§ 2. Terms for years.

Acceptance of check from tenant in default *held* not to waive the forfeiture, in the absence of a showing that the check was received with knowledge of a proposed limitation of its application to future rent.—Cochran v. Philadelphia Mortgage & Trust Co. (Neb.) 1051.

§ 3. Premises, and enjoyment and use thereof.

Under a lease requiring the tenant to return the premises in as good condition as when received, the tenant cannot leave on the premises his own property, which had been injured by a fire, where the tenancy was terminated by agreement.—Boardman v. Howard (Minn.) 84.

Where the use of a hall and doorway was necessarily incident to the lease, an obstruction thereof by the lessor *held* an eviction, which the lessee may treat as total or partial, at his election.—Kitchen Bros. Hotel Co. v. Philbin (Neb.) 487.

A covenant for quiet enjoyment of the leased premises is implied from the demise.—Kitchen Bros. Hotel Co. v. Philbin (Neb.) 487.

A lease of a part of a building passes with it everything necessary to the enjoyment of the part demised.—Kitchen Bros. Hotel Co. v. Philbin (Neb.) 487.

Where a room on the ground floor of a hotel building was leased to a ticket broker, the lease *held* to carry with it the use for the lessee's customers of a door and hallway leading from the rotunda of the hotel to the room leased. —Kitchen Bros. Hotel Co. v. Philbin (Neb.) 487.

Where plaintiff, suing on a written lea tached a copy to his complaint, and the contained a covenant to "write $400 ins upon building," an averment that defend lowed the insurance to lapse does not s breach of covenant.—Johnson v. Kindred Bank (N. D.) 588.

§ 4. Rent and advances.

Evidence in an action for rent *held* su to warrant a finding that there had been tlement between the parties.—Stevens v. sley (Mich.) 571.

In an action for rent, the charge to the on returning into court without having on a verdict, as to the burden of proof, *he* ficient, in view of the instructions in the eral charge.—Stevens v. Beardsley (Mich.

Where, in an action for rent, fraud in the making of the lease is alleged, it m specifically alleged, and the fraudulent charged in the answer.—Bauer v. Taylor 268.

Where, in an action for rent, the answ leged fraud, and no knowledge on the p the lessor of the fraud, and no fraudulent is charged, evidence of such fraud is inad ble.—Bauer v. Taylor (Neb.) 268.

Where a lessee has been induced by fra enter into a lease, he may, in an action f rent, recoup the damages suffered.—Bau Taylor (Neb.) 268.

Where a lessee elects to treat an ev as partial, he may maintain a counterclai damages on the implied covenant for qui joyment.—Kitchen Bros. Hotel Co. v. P (Neb.) 487.

In foreclosing a lien on crops, the court erly refused to retain more of the crops necessary to discharge the amount due.— rich v. Schwartz (Neb.) 636.

§ 5. Re-entry and recovery of po sion by landlord.

In an action by a tenant for an unlawf try of the landlord, an instruction that tenancy had terminated, and defendant us dinary care in removing the goods, he wa liable in damages for a resulting injury, proper.—Ish v. Marsh (Neb.) 58.

Under a lease providing that on defau rent the landlord may retake possession out former notice, a right to maintain a tion of detention accrues after default statutory notice to the tenant.—Cochran v. adelphia Mortgage & Trust Co. (Neb.) 10

LAND OFFICE.

See "Public Lands," § 1.

LANDS.

See "Public Lands."
Mineral lands, see "Mines and Minerals."
Registration of land titles, see "Records."

LARCENY.

See "Robbery."
Admissibility of evidence of acts and de tions of conspirators, see "Criminal L § 8.
Admissibility of evidence of other offenses "Criminal Law," § 6.
Character of accused, see "Criminal Law,"
Duplicity in indictment, see "Indictment Information," § 3.
Harmless error, see "Criminal Law," § 18.
Opinion evidence, see "Criminal Law," §
Principals and accessories, see "Criminal L § 1.

Where accused explains his possession of stolen property by stating it was pledged to him by a stranger to secure a loan, the truthfulness of the explanation is for the jury's determination.—State v. King (Iowa) 712.

In a prosecution for larceny from a roommate, evidence as to whether any burglaries were committed in an adjoining building during the same night is inadmissible as tending to establish the guilt of accused.—State v. King (Iowa) 712.

In a prosecution for larceny of a watch, an instruction that accused's possession cast on him the burden of explaining how the watch came into his possession is not objectionable as casting on him the burden of establishing his innocence.—State v. King (Iowa) 712.

Evidence examined, and *held* to support a verdict of guilty of larceny.—Van Syoc v. State (Neb.) 266.

Evidence that, a day or two before the larceny was committed, the person from whom the money was alleged to have been taken had similar money in his possession, was not inadmissible, as too remote.—Van Syoc v. State (Neb.) 266.

That property alleged to have been stolen was taken without the consent of the owner may be inferred from circumstances shown in the evidence.—Van Syoc v. State (Neb.) 266.

Evidence *held* to sustain a conviction of larceny.—O'Brien v. State (Neb.) 649.

LAW OF THE CASE.

Decision on appeal, see "Appeal and Error," § 30.
Previous decisions in same case as law of the case, see "Courts," § 1.

LAWS.

Of other states, judicial notice, see "Evidence," § 2.

LEASES.

See "Landlord and Tenant."
Of public lands, see "Public Lands," § 1.
Mining leases, see "Mines and Minerals," § 1.
Specific performance, see "Specific Performance," § 1.

LEGACIES.

See "Wills."

LEGACY TAX.

See "Taxation," § 9.

LEVY.

Of execution, see "Execution," § 3.
Of taxes, see "Taxation," § 2.

LIBEL AND SLANDER.

§ 1. Words and acts actionable, and liability therefor.

One who puts a libel in circulation is liable for any subsequent publications which are the natural consequence of his act.—Schmuck v. Hill (Neb.) 158.

Where a libelous letter was addressed to plaintiff and her employer jointly, and it was turned over to the employer to read, there was a publication.—Schmuck v. Hill (Neb.) 158.

Where a libelous letter is so addressed that it will reach a third person, and it does so reach him, there is a sufficient publication.—Schmuck v. Hill (Neb.) 158.

LICENSES.

For sale of intoxicating liquors, see "Intoxicating Liquors," § 1.
Injuries to licensees, see "Negligence," § 1; "Railroads," §§ 4–7.
Mandamus to review proceedings to procure, see "Mandamus," § 2.

LIENS.

Effect of assignment for benefit of creditors, see "Assignments for Benefit of Creditors," § 2.
Subrogation to right to lien, see "Subrogation."

Liens acquired by particular remedies or proceedings.

See "Taxation," § 3.

Particular classes of liens.

See "Mechanics' Liens."
For corporate debts, see "Corporations," § 6.
For debts against decedents' estates, see "Wills," § 6.
For public improvements, see "Municipal Corporations," § 8.
Landlord's lien for rent, see "Landlord and Tenant," § 4.
Mortgage, see "Chattel Mortgages," § 2.
On goods sold, see "Hawkers and Peddlers."
Tax lien, see "Taxation," §§ 3–5.
Vendor's lien on lands sold, see "Vendor and Purchaser," § 5.

LIFE ESTATES.

See "Curtesy"; "Dower"; "Remainders."

LIFE INSURANCE.

See "Insurance," § 5.

LIMITATION OF ACTIONS.

See "Adverse Possession."
Laches, see "Equity," § 1.

Particular actions or proceedings.

Against administrator, see "Executors and Administrators," § 5.
Equitable relief against judgment, see "Judgment," § 6.
On benefit certificate, see "Beneficial Associations."
On claim against decedent's estate, see "Wills," § 6.
On note, see "Bills and Notes," § 6.
Probate proceedings, see "Wills," § 4.
To enforce dower rights, see "Dower," § 2.
To establish trust, see "Trusts," § 4.
To recover land sold for taxes, see "Taxation," § 7.
To recover water rent, see "Waters and Water Courses," § 5.

§ 1. Computation of period of limitation.

Code, § 3453, providing for extension of time for commencement of actions in favor of insane persons, *held* not to apply where plaintiff becomes insane a few hours after his cause of action accrues.—Roelefsen v. City of Pella (Iowa) 738.

In action on liquor dealer's bond, amendment to pleading *held* to set up a new cause of action barred by the statute.—O'Banion v. DeGarmo (Iowa) 739.

Facts *held* to justify a finding of fraudulent concealment of a debt due to an intestate, so as to suspend the running of limitations against an action by the administratrix.—Wolkins v. Knight (Mich.) 445.

Digitized by Google

1897,
er the
n (M

7.

, see

.

.

ce."

2.

UTIC

e "E

se.
insa
is i
caus
eb.)

sel wi
bour
atem
Neb.)

crimir
want
s.) 80

of fac
ead a
n ho
n ar
03.

e ma
ire to
. All

osecu
nding
intiff,
e over
658.

prosec
dence
direct
Neb.)

icious
failed
couns
comm
pie v.

for
dama
Wis.)

Digitized by Google

In an action for malicious prosecution, an award of damages of $1,000 *held* not excessive. —Eggett v. Allen (Wis.) 803.

In actions for malicious prosecution, where plaintiff recovers, punitory damages may be awarded where the prosecution was begun or actively carried on by defendant.—Eggett v. Allen (Wis.) 803.

In an action for malicious prosecution, based on criminal charges, made by defendant, arising out of a land deal, evidence that defendant's agent, placed on the land, excluded plaintiff therefrom, *held* admissible.—Eggett v. Allen (Wis.) 803.

MANDAMUS.

§ 1. Nature and grounds in general.

Mandamus will not lie to compel the chief of police to cause the arrest of certain persons, where the cause of the proceeding is the spite of the relator toward the persons accused.—Donahue v. State (Neb.) 1038.

§ 2. Subjects and purposes of relief.

Where a street commissioner was incompetent, he was not entitled to mandamus to compel payment of his salary for the period between his suspension and removal.—Hartwig v. City of Manistee (Mich.) 1067.

Legality of proceedings of a city council in removing a street commissioner for incompetency cannot be reviewed by mandamus.—Hartwig v. City of Manistee (Mich.) 1067.

The Supreme Court will not attempt by mandamus to control the discretionary powers of the district court.—State v. Stull (Neb.) 121.

Where a protest against the grant of a saloon license was duly filed, mandamus will lie to compel the board to appoint a day for hearing the case, as required by Comp. St. 1901, c. 50, § 3.—Moores v. State (Neb.) 225.

Mandamus will lie to control the action of a state printing board in awarding contracts for state printing to the lowest and best bidder.—Marsh v. State (Neb.) 520.

The Board of Regents of the State University, in allowing certificates or salaries of professors in that institution, act ministerially, and mandamus will lie to compel such action.—Von Forel v. State (Neb.) 648.

§ 3. Jurisdiction, proceedings, and relief.

The owner of a parcel of land sold for taxes assessed in bulk *held* not entitled to raise question of his right to redeem under Tax Laws, §§ 140, 141 (Comp. Laws, §§ 3959, 3960), in mandamus to compel the cancellation of the deed to which the purchaser was not a party. —Kennedy v. Auditor General (Mich.) 928.

MANDATE.

See "Mandamus."

To lower court on decision on appeal or writ of error, see "Appeal and Error," § 31.

MANUFACTURES.

Manufacturing companies, see "Corporations," § 1.

MARKETS.

In cities, see "Municipal Corporations," § 11.

Validity of oral contract not to be performed within a year, see "Frauds, Statute of," § 2.

Record evidence of marriage is not necessary, but it may be proved by any kind of evidence. —Casley v. Mitchell (Iowa) 725.

The register of a parish in England is competent evidence of a marriage recorded therein.—Casley v. Mitchell (Iowa) 725.

Testimony *held* sufficient to establish a marriage.—Casley v. Mitchell (Iowa) 725.

MARRIED WOMEN.

See "Husband and Wife."

MASTER AND SERVANT.

See "Work and Labor."

Conclusiveness of judgment in action for breach of contract of employment, see "Judgment," § 8.

Custom as to inspection of place to work, see "Customs and Usages."

Opinion evidence in action for personal injuries, see "Evidence," § 10.

Restraining disclosure of trade secrets by employé, see "Injunction," § 2.

§ 1. The relation.

An assault wrongfully committed by a master may justify the servant in abandoning the master's service.—Erickson v. Sorby (Minn.) 791.

Where a servant justifies the abandonment of his master's service because of an assault upon him, the nature of the assault, and whether a sufficient justification, is a question of fact for the trial court.—Erickson v. Sorby (Minn.) 791.

Where a traveling salesman was required to work on Sundays, expenses incurred on such days in performing service under the contract should be included in ascertaining the average expenses per "working day."—Ornstein v. Yahr & Lange Drug Co. (Wis.) 826.

A contract of employment *held* entire.—Ornstein v. Yahr & Lange Drug Co. (Wis.) 826.

An entire contract of employment *held* not severable by reason of the fact that payments made were the pro rata amount for services rendered before payment.—Ornstein v. Yahr & Lange Drug Co. (Wis.) 826.

§ 2. Services and compensation.

In an action for wages retained by an employer, whether plaintiff waived his right thereto by accepting payments purporting to have been made in full *held* a question for the jury. —Stevens v. Michigan Soap Works (Mich.) 435.

§ 3. Master's liability for injuries to servant.

Failure to provide a platform about a pile driver to prevent injury to servants below by the falling of tools *held* not to constitute negligence.—Miniter v. Chicago & N. W. Ry. Co. (Iowa) 1108.

In an action for injuries to a servant by the falling of a crowbar, defendant *held* not liable for the act of its assistant foreman in permitting the use of the bar.—Miniter v. Chicago & N. W. Ry. Co. (Iowa) 1108.

A notice to railroad employés *held* to merely describe the nature of the danger at a certain point, and not to give notice that material might be piled alongside of any of the tracks. —Bradburn v. Wabash R. Co. (Mich.) 929.

A railroad company, knowing of the existence of lumber piles placed, contrary to custom, close to the switch track through a pri-

Digitized by Google

f the danger.—Bradburn v. Wabash R. Co. Mich.) 929.

A switchman, struck by lumber piled close o the track, which he could not see and of vhich he had no knowledge, *held* not negligent n not getting on the rear of the car.—Bradburn v. Wabash R. Co. (Mich.) 929.

A flogging hammer, used in a machine shop, *held* an implement, within the rule requiring the naster to furnish tools reasonably safe.—Vant Hul v. Great Northern Ry. Co. (Minn.) 789.

Before recovery can be had for negligence f employer in not informing employé of the langer attending the operation of a machine, t must appear that the injury occurred because f the want of such instruction.—Fronk v. J. H. Evans City Steam Laundry (Neb.) 1053.

In an action for injury to a servant while operating an air valve connected with an engine by means of a loose wheel, evidence *held* o establish that plaintiff was guilty of contributory negligence.—Upthegrove v. Jones & Adams Coal Co. (Wis.) 385.

§ 4. —— Fellow servants.

A servant unloading rails *held* engaged in work connected with the use and operation of the company's railroad, within Code, § 2071.—Williams v. Iowa Cent. Ry. Co. (Iowa) 774.

Code, § 2071, renders a railway company liable to its employés for injuries sustained by the negligence of other servants when engaged in work exposing them to the hazards arising from the operation of a railroad.—Williams v. Iowa Cent. Ry. Co. (Iowa) 774.

A negligent act of a superintendent in ordering a small emery wheel placed on a high-geared machine *held* the act of a fellow servant of an employé injured by the bursting of a wheel, and not negligence of a vice principal.—Randa v. Detroit Screw Works (Mich.) 454.

The obligation of a master to provide reasonably safe instrumentalities, embraces the obligation to provide a sufficient number of servants to perform the work safely.—Peterson v. American Grass Twine Co. (Minn.) 913.

A head sawyer, operating the carriage of a circular saw, and edgermen, managing the edging saws, *held* fellow servants.—Grant v. Keystone Lumber Co. (Wis.) 535.

Where the proximate cause of an injury is the defective condition of edger saws, the employer cannot escape liability because the negligence of fellow servants concurred in causing the injury.—Grant v. Keystone Lumber Co. (Wis.) 535.

§ 5. —— Risks assumed by servant.

Negligence of a person employed on a pile driver, by reason of which plaintiff's intestate was killed by the falling of the bar, *held* negligence of intestate's fellow servant.—Miniter v. Chicago & N. W. Ry. Co. (Iowa) 1108.

Selection of an emery wheel to be used on a grinding machine in a factory *held* not a duty devolving on the master, and hence an operative, in using one of them, assumed the risk of its bursting.—Randa v. Detroit Screw Works (Mich.) 454.

A switchman *held* not to have assumed the risk of lumber piled close to the track, contrary to custom; he not knowing of it.—Bradburn v. Wabash R. Co. (Mich.) 929.

Assumption of risk described.—Bradburn v. Wabash R. Co. (Mich.) 929.

A minor servant *held* to have assumed the risk of injury from certain uncovered cogwheels, where, under the circumstances, he ought to have known and comprehended the danger therefrom.—Upthegrove v. Jones & Adams Coal Co. (Wis.) 385.

Grant v. Keystone Lumber Co. (Wis.) 535.

§ 6. —— Actions.

In action by servant for injuries, an instruction *held* not cured by another instruction.—Thayer v. Smoky Hollow Coal Co. (Iowa) 718.

In action for injuries sustained by employé in a coal mine, an instruction *held* erroneous as depriving defendant of benefit of certain evidence, and liable to lead the jury to believe that evidence as to custom as to which party should care for the place of work was immaterial.—Thayer v. Smoky Hollow Coal Co. (Iowa) 718.

In an action for injuries sustained by employé in a coal mine, evidence that a piece of slate would be liable to fall from the roof a certain number of days after it became loose *held* insufficient to make out a case.—Thayer v. Smoky Hollow Coal Co. (Iowa) 718.

In an action by a servant employed, with others, in unloading rails from a car in a train, an instruction that if plaintiff gave the signal to move the train forward, and as a result of such movement he was injured, he could not recover, *held* erroneous.—Williams v. Iowa Cent. Ry. Co. (Iowa) 774.

Where an employé was injured by defects in a hammer furnished by the master, it was a question for the jury whether the employé ought to have known that the hammer was defective, and ought to have appreciated the danger.—Vant Hul v. Great Northern Ry. Co. (Minn.) 789.

Evidence in an action for injuries to servant *held* to show negligence of master in failing to furnish a sufficient number of employés to perform the work safely.—Peterson v. American Grass Twine Co. (Minn.) 913.

In an action against a master for injuries causing death, evidence *held* to show deceased guilty of contributory negligence.—Braaflat v. Minneapolis & N. Elevator Co. (Minn.) 920.

In an action for injuries to a servant by his contributory negligence, it was not error to direct a verdict for defendant.—Fay v. Chicago, B. & Q. R. Co. (Neb.) 638.

Whether a guard rail, attached to a mangle to protect the operator, was properly placed, was a question for the jury.—Fronk v. J. H. Evans City Steam Laundry (Neb.) 1053.

In an action by a mill employé, evidence *held* insufficient to warrant the legal conclusion that the injury was caused wholly by the negligence of a fellow servant.—Grant v. Keystone Lumber Co. (Wis.) 535.

In an action by a mill employé, evidence *held* to present a question for the jury whether defendant's negligence in respect to the defective condition of a saw was the proximate cause of the injury.—Grant v. Keystone Lumber Co. (Wis.) 535.

MASTERS OF VESSELS.

See "Shipping," § 1.

MATERIALITY.

Of evidence in civil actions, see "Evidence," § 3.

MEASURE OF DAMAGES.

See "Damages," § 3.

MECHANICS' LIENS.

§ 1. Proceedings to perfect.

Where a verified mechanic's lien claim sta a prior owner as the owner of the prop

Digitized by Google

such an error could not be excused, except by conduct of the owner at the time the lien was filed which would estop him from taking advantage thereof.—Waters v. Johnson (Mich.) 504.

Where a mechanic's lien claimant filed a verified claim for a lien, misstating the name of the owner, he was not entitled to excuse the mistake on the ground of ignorance, or that he did not know the owner's name, and was therefore not required to state the same, under Comp. Laws, § 10,714.—Waters v. Johnson (Mich.) 504.

Under Comp. Laws, §§ 10,714, 10,715, requiring a mechanic's lien claim to state the name of the owner, a claim stating the name of a person who had parted with his interest in the property at the time the lien was filed as the owner was insufficient.—Waters v. Johnson (Mich.) 504.

A claim for a mechanic's lien *held* to have been filed on the date of its receipt by the clerk and prior to the commencement of an action to foreclose the same, as required by Rev. St. 1898, § 3321.—Lang v. Menasha Paper Co. (Wis.) 393.

§ 2. Operation and effect.

The lien of an ordinary mortgage *held* not subordinate to mechanics' liens.—Chaffee v. Sehestedt (Neb.) 161.

Where a person acting in good faith and without negligence takes a mortgage on an unincumbered title, where the land is not in adverse possession, it is superior to mechanics' liens thereafter contracted.—Boggs v. McEwen (Neb.) 666.

§ 3. Enforcement.

A finding that a mechanic's lien was perfected within four months after the contract was completed *held* supported by the evidence.—Bankers' Building & Loan Ass'n v. Williams (Neb.) 655.

Whether the claim on which a mechanic's lien was founded was sold by the contractor prior to his perfecting such lien, and whether the last work on the building was done in good faith, are questions of fact.—Bankers' Building & Loan Ass'n v. Williams (Neb.) 655.

MEDICAL EXPERTS.

Testimony in criminal prosecutions, see "Criminal Law," § 9.

MEETINGS.

Of municipal council, see "Municipal Corporations," § 3.
Of stockholders, see "Corporations," § 4.

MEMORANDA.

Required by statute of frauds, see "Frauds, Statute of," § 5.

MERGER.

Of cause of action in judgment, see "Judgment," § 8.

MINES AND MINERALS.

Opinion evidence in action for personal injuries, see "Evidence," § 10.

§ 1. Title, conveyances, and contracts.

A mining lease, under which nothing had been done for over 43 years, *held* forfeited for nonuser, as against complainants, holding under a different title, who had expended large sums in developing valuable mines on the property without the lessee's objection.—Negaunee Iron Co. v. Iron Cliffs Co. (Mich.) 468.

Equity will enforce a forfeiture of a mining lease, where such forfeiture protects the landowner against the indifference and laches of the lessee.—Negaunee Iron Co. v. Iron Cliffs Co. (Mich.) 468.

A right to mine ore under a lease, appurtenant to a blast furnace erected to smelt the ore, *held* destroyed by the abandonment and destruction of the furnace.—Negaunee Iron Co. v. Iron Cliffs Co. (Mich.) 468.

Mining rights acquired by a corporation under a lease *held* appurtenant to a furnace as it then existed on the land, and that the corporation was entitled to mine no more ore than was necessary to supply such furnace.—Negaunee Iron Co. v. Iron Cliffs Co. (Mich.) 468.

A deed reserving mining privileges *held* to convey to the grantee no title to the ore in place.—Negaunee Iron Co. v. Iron Cliffs Co. (Mich.) 468.

A deed and contract for the conveyance of mining land construed, and *held* to reserve to the grantor an undivided one-half interest in the minerals contained in the land conveyed.—Negaunee Iron Co. v. Iron Cliffs Co. (Mich.) 468.

A bill to restrain certain corporations from trespassing on mining land *held* not objectionable for failure to make another alleged defunct corporation, to whose rights defendants had succeeded, a party.—Negaunee Iron Co. v. Iron Cliffs Co. (Mich.) 468.

A bill *held* to state a cause of action to enjoin threatened trespasses on mining land.—Negaunee Iron Co. v. Iron Cliffs Co. (Mich.) 468.

An answer, in which defendant's predecessor acknowledged that its rights were subject to those acquired by plaintiff from the grantor in a deed reserving an interest in mining lands, *held* a recognition that such grantor retained title in fee to one-half of the minerals by his original conveyance.—Negaunee Iron Co. v. Iron Cliffs Co. (Mich.) 468.

MINORS.

See "Infants."

MISCARRIAGE.

Causing or procuring, see "Abortion."

MISREPRESENTATION.

See "Fraud."
Affecting validity of contract, see "Contracts," § 1.
Affecting validity of sale, see "Sales," § 3.
By insured, see "Insurance," § 5.

MISTAKE.

Effect on limitation, see "Limitation of Actions," § 1.
Ground for equitable relief against judgment, see "Judgment," § 6.
Of fact as ground for reformation of contract, see "Reformation of Instruments," § 1.

MODIFICATION.

Of bill of exchange or promissory note, see "Bills and Notes," § 3.
Of requested instructions by court, see "Criminal Law," § 16.

MONEY.

Exemption from execution, see "Exemptions," § 1.

Digitized by Google

MONEY RECEIVED.

Recovery of price paid for goods, see "Sales," § 8.
Recovery of tax paid, see "Taxation," § 4.

Where money is paid on a contract the consideration of which has wholly failed, a recovery may be had as for money had and received.—Warder, Bushnell & Glessner Co. v. Myers (Neb.) 992.

MONOPOLIES.

§ 1. Trusts and other combinations in restraint of trade.

Evidence *held* to show that a contract was illegal as in restraint of trade.—Detroit Salt Co. v. National Salt Co. (Mich.) 1.

MORTALITY TABLES.

Admissibility in evidence to show damages sustained, see "Damages," § 5.

MORTGAGES.

Competency of witnesses in action to cancel mortgage given to person since deceased, see "Witnesses," § 2.
Of personal property, see "Chattel Mortgages."
Priorities of mechanics' liens, see "Mechanics' Liens," § 2.
Specific performance of contract to execute, see "Specific Performance," § 1.
Subrogation to rights of mortgagee, see "Mortgages."

§ 1. Requisites and validity.

Where a deed absolute in form is given to secure a debt, it should be treated as a mortgage.—Tannyhill v. Pepperl (Neb.) 1005.

Evidence *held* sufficient to sustain a judgment that an absolute deed was given as a mortgage.—Tannyhill v. Pepperl (Neb.) 1005.

Evidence considered, and *held* to show that an absolute deed and a contemporaneous agreement constituted a mortgage.—Wells v. Geyer (N. D.) 289.

Mere inadequacy of price is not alone ground for declaring a deed to be a mortgage; but gross inadequacy is a circumstance to be considered in determining the intention of the parties.—Forester v. Van Auken (N. D.) 301.

Evidence considered, and *held* not to warrant a decree declaring a deed to be a mortgage.—Forester v. Van Auken (N. D.) 301.

§ 2. Construction and operation.

Notes and mortgages executed in the state where the mortgaged land lies, though executed to a foreign building association, are to be construed by the laws of the state.—People's Bldg. Loan & Sav. Ass'n v. Parish (Neb.) 243.

§ 3. Rights and liabilities of parties.

Where a seller of stock alleged that land conveyed was to secure the price of the stock, and the seller had been in possession for more than six years, he could not recover the price of the stock without accounting to the buyer for the rents and profits of the land.—Weise v. Anderson (Mich.) 575.

Where a grantee in possession alleged that a conveyance was a mortgage only to secure the price of certain corporate stock, his remedy was in equity to have the deed so declared, and not an action at law for the price of the stock.—Weise v. Anderson (Mich.) 575.

A tax assessment against a mortgagee, based on his mortgage, is within the mortgagor's covenant to pay all assessments "on or on account of the mortgage or the debt secured thereby."—Green v. Grant (Mich.) 583.

The trustee in a trust deed to sec
has such powers as mortgagees usua
—Robeson v. Dunn (S. D.) 104.

§ 4. Assignment of mortgage

A transfer of a note carries with i
gage securing it, and the want of
written assignment will not defeat fo
Brynjolfson v. Osthus (N. D.) 261.

The transfer of a mortgage note c
it the security.—Grether v. Smith (S

§ 5. Payment or performance
dition, release, and sat

The holder of a mortgage on land,
for other land by the mortgagor, *held*
to discharge the mortgage, pursua
agreement, until a new mortgage o
conveyed to the mortgagor was
Trombley v. Cannon (Mich.) 516.

A mortgagee is not liable for fail
lease a mortgage, where the right of
demanding it is doubtful.—Sullivan
v. Sharp (Neb.) 522.

§ 6. Foreclosure by exercise
of sale.

A trust deed is in effect a mortgage,
closure out of court by sale under t
therein conveys no title.—Staunchfiel
ter (Neb.) 642.

Where a mortgagee in possession un
foreclosure sale disposes of building
property and permits them to be remo
liable for waste.—Staunchfield v. Jeut
642.

§ 7. Foreclosure by action.

Where a cross-bill in a suit to pe
seeks the foreclosure of a mortgage,
til plaintiff's title was perfected, mig
nied, a decree for foreclosure may b
to stand, without costs and attorne
Mock v. Chalstrom (Iowa) 909.

A mortgagor's equity of redempti
off by foreclosure sale.—Hartman M
Luse (Iowa) 972.

A party cannot assail a decree of f
by objections to confirmation of the sa
v. Parrotte (Neb.) 155.

Where there is no evidence in the
support the contention that a decree
tered at an adjournment of the Septem
1896, held in January, 1897, except
by the clerk in the order of sale unde
recital is insufficient as evidence that
entered the decree at a term illeg
vened.—Phœnix Mut. Life Ins. Co.
(Neb.) 214.

In a suit to foreclose a mortgage,
held not required to find the precis
paid on each note secured and when
ments were made.—Wenke v. Hall (S.

§ 8. —— Parties and process.

Service of notice in a mortgage fo
on a trustee, who held the legal title
give the trustee authority to appear
cestui que trust, so far as to autho
personal judgment against him.—Th
Prentice (Iowa) 728.

A service of process *held* to have be
fective as to have amounted to no
Thornily v. Prentice (Iowa) 728.

Under Code 1873, § 2599, notice
mencement of action in mortgage fo
held not insufficient.—Fleming v. Hage
752.

One to whom mortgaged land descen
be held to have a knowledge of the te
conditions of the mortgage.—Fleming v.
(Iowa) 752.

Under Code 1873, § 2599, in an a
foreclose a mortgage, it is not necessar
scribe the land covered by the mortg

is it necessary to make reference to the book or page where the record of the mortgage may be found.—Fleming v. Hager (Iowa) 752.

§ 9. —— Pleading and evidence.

In suit to foreclose mortgage, the burden of proving that one of defendants had agreed to pay the indebtedness *held* on plaintiff.—Thornily v. Prentice (Iowa) 728.

Evidence of negotiations for a settlement and an extension of time, and of efforts to avoid a suit on a mortgage, *held* to support a finding that legal proceedings had not been taken to collect debts secured by mortgage.—Klingenfeld v. Houghton (Neb.) 76.

That no proceedings at law have been had for recovery of a mortgage debt must be alleged and proved.—Alling v. Woodward (Neb.) 127.

Where a bank issued certificates of deposit secured by trust deeds of guarantors and a stockholder, a petition by a holder of a certificate for foreclosure of the stockholder's trust deed, alleging judgment at law against the bank and an execution unsatisfied, *held* insufficient to relieve the plaintiff from conformity to Code Civ. Proc. 1901, § 850, requiring petition for foreclosure to state whether any proceedings at law had been had for the recovery of the debt. —Michigan Trust Co. v. City of Red Cloud (Neb.) 140.

Omission of proof of the allegation that no proceeding at law has been begun in a suit to foreclose, in a contest between lienors, is error without prejudice.—Chaffee v. Schestedt (Neb.) 161.

Evidence *held* insufficient to show that a note and mortgage sued on were procured by fraud. —Fourth Nat. Bank v. Craig (Neb.) 185.

Evidence in an action to foreclose a mortgage against the purchaser of the equity, who had assumed the mortgage, *held* to show that the vendee and the mortgagor agreed at the time of sale that there should be retained from the purchase price only enough to pay incumbrance, less usurious penalties.—National Mut. Bldg. & Loan Ass'n v. Retzman (Neb.) 204.

A petition on foreclosure *held* insufficient to show authority in plaintiff to foreclose.—Hansen v. Mortensen (Neb.) 216.

A decree that a mortgage was invalid for want of privity *held* not sustained.—Goddard v. Clarke (Neb.) 350.

That a cross-petitioner does not produce evidence that no legal proceedings have been had to collect the mortgage debts does not warrant a finding that the mortgage is void.—Goddard v. Clarke (Neb.) 350.

Where defendants on foreclosure filed a demurrer, and while it was pending a cross-petition was filed, and the demurrer was submitted on the same day the cause was submitted on the petition, cross-petition, and evidence, and defendants resisted confirmation, they cannot complain of a lack of notice of the filing of the cross-petition.—Sanford v. Anderson (Neb.) 486.

Evidence in an action to foreclose, where the answer denies the ownership and purchase of the note, *held* to sustain a verdict for defendant.—John Stewart & Co. v. Allen (Neb.) 528.

That no proceeding at law had been had for the recovery of a debt is a necessary allegation in a petition for foreclosure.—Holt v. Rust-Owen Lumber Co. (Neb.) 613.

§ 10. —— Sale.

In general terms, the right of redemption and the right of possession are separate rights, and a sale of one does not ipso facto carry the other.—Hartman Mfg. Co. v. Luse (Iowa) 972.

Under Code, § 4045, a judgment creditor, levying on and purchasing at the execution sale his debtor's statutory right of redemption in mortgaged premises after foreclosure, acquires no right to the possession.—Hartman Mfg. Co. v. Luse (Iowa) 972.

Where an appraiser on foreclosure is disqualified, and the disqualification is known to the defendant prior to the appraisement, he cannot lie still until after the sale is made.—Union Cent. Life Ins. Co. v. Baker (Neb.) 116.

It is not a valid objection to a confirmation of a foreclosure sale that a copy of the decree was not attached to the order of sale.—Gallentine v. Cummings (Neb.) 178.

A notice of sale on foreclosure need not state the amount due in the decree.—Gallentine v. Cummings (Neb.) 178.

A foreclosure sale *held* not defective for insufficient description, though no county was given.—Phœnix Mut. Life Ins. Co. v. Sparks (Neb.) 214.

A foreclosure sale will not be set aside because the appraisal was less than the value fixed by parties whose affidavits are offered to impeach the appraisement.—Tootle, Lemon & Co. v. Willy (Neb.) 342.

A sale on foreclosure will not be set aside because no copy of the decree accompanied the order of sale.—Tootle, Lemon & Co. v. Willy (Neb.) 342.

Objections to confirmation of foreclosure sale, except for fraud, will not be considered where not raised before sale.—Gray v. Eurich (Neb.) 343.

Objections to confirmation on foreclosure will not be considered where made after sale and going to the appraisement only, unless fraud is alleged.—Gray v. Naiman (Neb.) 343.

Objections to appraisement on foreclosure must be made before sale.—Stein v. Parrotte (Neb.) 155; Sanford v. Anderson (Neb.) 486.

An error in appraisal for foreclosure *held* without prejudice, where the property sold for more than two-thirds of its gross valuation.—Sanford v. Anderson (Neb.) 486.

Where a sheriff's return shows a sale on foreclosure to "H., assignee of the decree herein," objection that the return shows no purchaser *held* not well taken.—McLagan & Pierce v. Witte (Neb.) 490.

The fact that no money was paid is not available as an objection, where the sale was made to the assignee of the decree.—McLagan & Pierce v. Witte (Neb.) 490.

Objection that the order and notice of sale make no mention of the assignment of the decree is not available, in the absence of any showing of prejudice.—McLagan & Pierce v. Witte (Neb.) 490.

Where an appraisement for foreclosure has been duly made, it cannot be successfully attacked as too low.—Pearson v. Badger Lumber Co. (Neb.) 493.

The action of appraisers on foreclosure, when duly taken, can be impeached for fraud only.—Pearson v. Badger Lumber Co. (Neb.) 493.

The purpose of appraisement for foreclosure is to fix a price below two-thirds of which no bids will be received.—Pearson v. Badger Lumber Co. (Neb.) 493.

Foreclosure sale will not be set aside for errors not prejudicial to the party complaining. —Clark v. Wolf (Neb.) 495.

Where the return of a sheriff on foreclosure shows a sale for a certain sum, the presumption is that the money was paid.—Kingsley v. Svoboda (Neb.) 518.

On proceedings to confirm a mortgage sale, no objection will be heard founded on an erroneous description of the premises, unless prej-

Digitized by Google

t be
not
Veb.)

will
es.—

time
nort-
they

the
pre-
ence
sley

lias
on
lack
be
dall

im-
and
be
the
ncy

first
the
ith-
avis

r in
his
nis-
is

inu-

al,"

Ap-

see

§ 3.
see

Ap-

'In-

Dis-

ju-

see

wk-

see

irs-

Digitized by Google

and dissolution.

Act May 28, 1903, requiring a township to pay over to incorporated village within its limits the proceeds of the sale of bonds for highway improvements, *held* not in violation of the right of local self-government.—Paye v. Grosse Pointe Tp. (Mich.) 1077.

Laws 1885, p. 148, c. 145, does not authorize the incorporation as a village of large tracts of rural territory.—State v. Village of Holloway (Minn.) 40.

Pol. Code, § 1609, relating to the disconnection of territory from a city, applies to a city operating under a special charter.—Coughran v. City of Huron (S. D.) 92.

The circuit court had jurisdiction of a proceeding by plaintiff to have a certain quarter section of land belonging to him disconnected from defendant city.—Coughran v. City of Huron (S. D.) 92.

Petition for disconnection of territory from a city *held* to sufficiently comply with Pol. Code, § 1609.—Coughran v. City of Huron (S. D.) 92.

§ 2. Governmental powers and functions in general.

Under Comp. St. 1901, c. 12a, § 50, authorizing a city to regulate and prohibit distribution of handbills in the streets, reasonableness of an ordinance passed thereunder is not a matter for the courts, except as to its constitutionality.—Anderson v. State (Neb.) 149.

§ 3. Proceedings of council or other governing body.

The minutes of a meeting of a city council *held* to show that each member present, naming him, voted yea, and nays none, on the question of the adoption of an ordinance, and sufficient within the statute.—Marion Water Co. v. City of Marion (Iowa) 883.

Under Code 1873, § 489, an ordinance *held* adopted at a meeting of the council at which the requisite number of members were present.—Marion Water Co. v. City of Marion (Iowa) 883.

Under Code 1873, § 489, an ordinance *held* invalid, as containing more than one subject, expressed in the title.—Marion Water Co. v. City of Marion (Iowa) 883.

§ 4. Officers, agents, and employés.

Under Laws 1899, p. 446, c. 265, § 8, relating to pensions for policemen, the examination and finding of the medical officer that the policeman is disabled *held* condition precedent to his retirement by the board of trustees of the pension fund for members of certain police departments.—State v. Board of Trustees of Policemen's Pension Fund (Wis.) 825.

§ 5. Public improvements.

Cities organized under the general incorporation act are authorized to alter and improve streets, and make contracts therefor, and provide for the expense by special assessment on adjoining property.—Pine Tree Lumber Co. v. City of Fargo (N. D.) 357.

The scheme of the general municipal incorporation act is to enable a city to make special improvements and to reimburse itself for the cost through special assessment on abutting property, without cost to the general taxpayer.—Pine Tree Lumber Co. v. City of Fargo (N. D.) 357.

§ 6. —— Preliminary proceedings and ordinances or resolutions.

The question of the number of the members of a city council required to be present at a meeting to adopt an ordinance *held* determined by Code 1873, § 493, and not by section 471.—Marion Water Co. v. City of Marion (Iowa) 883.

of granting an individual the right to establish a system of waterworks *held* a compliance with Code 1873, § 471.—Marion Water Co. v. City of Marion (Iowa) 883.

A waterworks company, complying with the obligations imposed on it by a city ordinance, *held* entitled to recover from the city the hydrant rentals provided for in the ordinance, though the ordinance is invalid.—Marion Water Co. v. City of Marion (Iowa) 883.

An invalid ordinance adopted by a city *held* ratified by the acts of the city.—Marion Water Co. v. City of Marion (Iowa) 883.

Under the statutes in force in the year 18[illegible], no special tax could be assessed on specific real estate in a city of the first class to pay for a wooden sidewalk, without a resolution fixing its cost as a special assessment thereon at a meeting of the city council with notice.—Trephagen v. City of South Omaha (Neb.) 248.

§ 7. —— Contracts.

A city council, receiving in silence the report of the mayor that he has entered into a contract for the establishment of a waterworks system, *held* not a ratification of his unauthorized act.—Marion Water Co. v. City of Marion (Iowa) 883.

A city council, which merely votes that it at once close a contract with an individual for the establishment by him of a system of waterworks, does not authorize the mayor to enter into a contract with the individual for the establishment of the works.—Marion Water Co. v. City of Marion (Iowa) 883.

Rev. Codes, § 2183, does not prevent a city, when it has advanced money to pay for a special improvement, reimbursing itself out of the special improvement fund.—Pine Tree Lumber Co. v. City of Fargo (N. D.) 357.

A city contract for the paving of a street construed, and *held*, that the city imposed upon itself the duty of collecting the assessment for creating the fund out of which warrants could be paid, and the diversion of such money when collected to any other purpose than the payment of the warrants was a breach of the contract.—Pine Tree Lumber Co. v. City of Fargo (N. D.) 357.

There is no charter restriction on the power of a city to render itself generally liable on its contract for special improvements.—Pine Tree Lumber Co. v. City of Fargo (N. D.) 357.

§ 8. —— Assessments for benefits, and special taxes.

Special assessments do not become liens, save as made so by statutory authority.—Cemansky v. Fitch (Iowa) 754.

Under Code, § 816, the lien for an assessment for street improvements *held* to attach at the time the papers mentioned in the statute are filed with the county auditor.—Cemansky v. Fitch (Iowa) 754.

An abutting owner *held* estopped from questioning his liability for a portion of the expense of street pavements, where he made no objections until the work was completed.—Nowlen v. City of Benton Harbor (Mich.) 450.

Where two streets on two sides of a corner lot were improved, it was competent for the city to include the property in two assessment districts.—Nowlen v. City of Benton Harbor (Mich.) 450.

Under Comp. Laws, §§ 3196, 3295, while lots benefited by two assessments may be included in two assessment districts, the entire annual assessment must be limited to 5 per cent. of the current valuation thereof.—Nowlen v. City of Benton Harbor (Mich.) 450.

Digitized by Google

The last preceding ward tax roll on which special assessments are required to be levied, under Comp. Laws, § 3196, *held* the last completed roll on which state, county, and school taxes have been spread.—Nowlen v. City of Benton Harbor (Mich.) 450.

A lot owner *held* not equitably entitled to have an assessment for local improvements, based on a valuation of the lots at $3,000, reduced.—Nowlen v. City of Benton Harbor (Mich.) 450.

Before the board of public works of the city of St. Paul can determine the district within which property will be specially benefited by a local improvement under City Charter 1900, c. 6, tit. 3, § 7, the notice provided for in section 25 of the same title must be given.—State v. District Court of Ramsey County (Minn.) 737.

Statutory provisions as to the manner of levying special assessments must be strictly complied with.—Farmers' Loan & Trust Co. v. Hastings (Neb.) 104.

In 1898 cities of the first class had no power to levy a special tax on specific lots for the purpose of paying the cost of removing garbage therefrom.—Traphagen v. City of South Omaha (Neb.) 248.

§ 9. —— Enforcement of assessments and special taxes.

Where an entire tract of land is sold at private sale for a special city assessment levied against only a portion thereof, such sale is not within Comp. St. 1901, c. 77, art. 1, § 131, providing that a county shall hold the purchaser harmless for error in description.—Concordia Loan & Trust Co. v. Douglas County (Neb.) 55.

A county is not liable, under Comp. St. 1901, c. 77, art. 1, § 131, for a mistake of the city officer in certifying city assessments to the county treasurer.—Concordia Loan & Trust Co. v. Douglas County (Neb.) 55.

The law of 1890 being simply a revision of Comp. Laws 1887, §§ 959-999, relating to special assessments, a mortgage on city property executed after 1887 and before the law of 1890 *held* executed at a time when the city had a lien on land for special assessments.—Kirby v. Waterman (S. D.) 129.

Under Laws 1890, pp. 98, 99, c. 37, art. 16, §§ 32, 34, a deed executed by a city conveying land for the nonpayment of special assessments *held* not defective because of the omission of the seal to the signature of the city treasurer.—Kirby v. Waterman (S. D.) 129.

Deeds executed by a city for the nonpayment of assessments for local improvements convey title superior to an existing mortgage.—Kirby v. Waterman (S. D.) 129.

The execution of a deed by a city conveying land for the nonpayment of special assessments is prima facie evidence of the giving of notice to the person in whose name the land was assessed that a deed would be demanded.—Kirby v. Waterman (S. D.) 129.

Under the law of 1890, and Laws 1891, p. 68, c. 14, § 121, a deed by a city conveying land for the nonpayment of special assessments levied thereon *held* valid, without the giving of any notice to the person in whose name the land is assessed that a deed will be demanded.—Kirby v. Waterman (S. D.) 129.

§ 10. Police power and regulations.

Corn sold for grinding at a mill within the corporate limits of a city *held* within a city ordinance requiring produce sold for consumption within the city to be weighed on the city scales.—State v. Smith (Iowa) 899.

A city ordinance, requiring corn sold for consumption in the city to be weighed on city scales, was not invalid as an unreasonable restraint of trade.—State v. Smith (Iowa) 899.

Code, § 717, *held* to authorize the passage of an ordinance designating a portion of a certain street as a public market, and prohibiting the sale of agricultural commodities at any other place in the city.—State v. Smith (Iowa) 899.

A police regulation, not operating unreasonably, *held* not invalid because it may affect incidentally the exercise of some right guarantied by the Constitution.—Anderson v. State (Neb.) 149.

§ 11. Use and regulation of public places, property, and works.

A city ordinance, authorizing the use of part of a street as a public market, which use was temporary and partial only, did not constitute a nuisance per se.—State v. Smith (Iowa) 899.

The construction of an ice chute across a street, so as to constitute a nuisance, *held* not justified on the ground of necessity.—Young v. Rothrock (Iowa) 1105; Same v. Chadima Bros., Id.

Under Code, § 753, a city *held* not authorized by the statute conferring power on it to regulate the streets, etc., to grant permission to an individual to construct an ice chute across a street.—Young v. Rothrock (Iowa) 1105; Same v. Chadima Bros., Id.

An ice chute, constructed by defendant across a street, *held* a nuisance.—Young v. Rothrock (Iowa) 1105; Same v. Chadima Bros., Id.

Where an obstruction of a street compels an abutting owner to go several blocks out of his way to reach his premises, he may maintain a suit for the removal thereof.—Young v. Rothrock (Iowa) 1105; Same v. Chadima Bros., Id.

§ 12. Torts.

On the question whether the discharge from a sewer constituted a nuisance, it may be shown that the sewer had no artificial ventilators or deodorizing appliances, so that all the odors were carried to the outlet.—Suddith v. Incorporated City of Boone (Iowa) 853.

Notice of a defective street to a city clerk *held* not notice to the city.—Corey v. City of Ann Arbor (Mich.) 477.

Time elapsing between Monday and the succeeding Friday night *held* insufficient to charge city authorities with notice of ice on a certain sidewalk, on which plaintiff was injured.—Corey v. City of Ann Arbor (Mich.) 477.

That the president of a city council lived near a defective street *held* insufficient to charge the city with notice of the defect.—Corey v. City of Ann Arbor (Mich.) 477.

In action against a city for personal injuries by defects in a sidewalk, the question of actual or constructive notice to the city must be established by evidence.—Northdruft v. City of Lincoln (Neb.) 163.

In an action for injuries caused by defects in a street, question of contributory negligence *held*, under the evidence, one for the jury.—City of South Omaha v. Taylor (Neb.) 209.

In an action for injuries by defects in a street, *held*, there was no material variance between pleading and proof.—City of South Omaha v. Taylor (Neb.) 209.

That one injured by a defect in a street knew of it is merely a circumstance to be considered in determining whether there was lack of due care.—City of South Omaha v. Taylor (Neb.) 209.

Under Comp. St. 1901, c. 13a, art. 1, § 110, a petition failing to allege the filing of notice of defects in street is fatally defective.—Goddard v. City of Lincoln (Neb.) 273.

The liability of a city for injuries caused by defects in streets rests exclusively on statute.—Goddard v. City of Lincoln (Neb.) 273.

One complaining of an omission of a city to keep the streets in proper repair will not be heard to complain of the qualification requiring notice of the defects to be given the city.—Goddard v. City of Lincoln (Neb.) 273.

Notice that an injury occurred on the sidewalk along the east side of a certain block between two named streets *held* a sufficient allegation of the place, required by Comp. St. 1897, c. 13a, § 36.—City of Lincoln v. Miller (Neb.) 484.

Evidence *held* to warrant submission to jury of the question whether defects in the sidewalk were so obvious and so long continued as to warrant presumption of notice.—City of Lincoln v. Miller (Neb.) 484.

In an action against a city for injuries on a sidewalk, evidence *held* to sustain a motion to direct a verdict for defendant.—Strait v. City of Eureka (S. D.) 695.

In an action for injuries to a pedestrian by falling on a defective sidewalk, an order of the court refusing to set aside a verdict finding plaintiff guilty of contributory negligence *held* not so clearly wrong as to require a reversal.—Bohn v. City of Racine (Wis.) 813.

§ 13. Fiscal management, public debt, securities, and taxation.

A city charter *held* to imply that the duty to list property with the assessor and to pay the taxes thereon rests on the owner, which includes a resident agent having possession of property of a nonresident of the state.—German Trust Co. v. Board of Equalization (Iowa) 878; Same v. City of Davenport, Id.

Code, § 1011, relating to taxation in cities under special charters, *held* to make applicable to such cities section 1320, relating to taxation of property in the hands of an agent.—German Trust Co. v. Board of Equalization (Iowa) 878; Same v. City of Davenport, Id.

Under Code 1873, § 473, a city *held* empowered to contract with a water company to pay for hydrant rentals a larger sum than would be raised by a special tax of five mills on the dollar, notwithstanding section 475.—Marion Water Co. v. City of Marion (Iowa) 883.

Good faith of purchasers of municipal bonds *held* not affected by fact of reliance on matters outside face of bonds.—Schmid v. Village of Frankfort (Mich.) 1056.

Question whether a private individual receiving municipal aid had complied with conditions before delivery of bonds *held* immaterial, in suit by holders.—Schmid v. Village of Frankfort (Mich.) 1056.

Under Comp. St. 1901, c. 45, § 14, the authority to issue bonds by any precinct is limited to such as are issued in aid of the works specifically enumerated.—State v. Weston (Neb.) 668.

§ 14. Actions.

In an action against a city to recover against it generally for diversion of moneys realized for special funds against which plaintiff's warrants were drawn, *held*, that the burden was on the city to show any defense to overcome the prima facie case of diversion made by the plaintiff.—Pine Tree Lumber Co. v. City of Fargo (N. D.) 357.

MURDER.

See "Homicide."

MUTUAL BENEFIT INSURANCE.

See "Insurance," § 11.

MUTUAL BENEFIT SOCIETIES.

See "Beneficial Associations."

MUTUAL INSURANCE COMPANIES.

See "Insurance," § 1.

MUTUALITY.

Of contract essential to specific performance, see "Specific Performance," § 1.

NAMES.

See "Trade-Marks and Trade-Names."

A judgment *held* of no validity because of variance between proper name of defendant and that given in the judgment and process.—Thornily v. Prentice (Iowa) 728.

NAVIGABLE WATERS.

See "Waters and Water Courses."

§ 1. Riparian and littoral rights.

The construction of a pier in an inland lake below high-water mark, by a person having no interest in the shore, *held* a private nuisance as against the abutting shore owners.—McCarthy v. Murphy (Wis.) 531.

Lessees of the shore of a lake *held* not guilty of conversion of material used in the construction of a pier opposite their land by plaintiffs without authority.—McCarthy v. Murphy (Wis.) 531.

NEGLIGENCE.

Causing death, see "Death," § 1.
Exemption from liability for, as consideration of contract, see "Contracts," § 1.
Operation and effect of, as ground of estoppel, see "Estoppel," § 2.

By particular classes of parties.

See "Carriers," § 2; "Municipal Corporations," § 12.
Employers, see "Master and Servant," §§ 3-6.
Railroad companies, see "Railroads," §§ 4-7.
Telegraph or telephone companies, see "Telegraphs and Telephones," §§ 1, 2.

Condition or use of particular species of property, works, or machinery.

See "Highways," § 3; "Railroads," §§ 4-7; "Street Railroads," § 2.
Streets, see "Municipal Corporations," § 1.

Contributory negligence.

Of owner of animals injured by operation of railroad, see "Railroads," § 6.
Of passenger, see "Carriers," § 2.
Of person injured by operation of street railroad, see "Street Railroads," § 2.
Of person injured by telephone wire, see "Telegraphs and Telephones," § 1.
Of person injured on city street, see "Municipal Corporations," § 12.
Of servant, see "Master and Servant," § 3.

§ 1. Acts or omissions constituting negligence.

Evidence *held* to show plaintiff a bare licensee, and that his only right of action would be for wanton injury inflicted upon him by defendant or his employés.—Chesley v. Rocheford & Gould (Neb.) 241.

Where one enters on the premises of another with his consent, but without his invitation and not in the discharge of any duty, he is a bare licensee.—Chesley v. Rocheford & Gould (Neb.) 241.

In an action against the owner of a building burned through his alleged negligence, for damages to other property, caused by a communication of the fire thereto, defendant *held* not

Digitized by Google

Where plaintiff went on defendant's premises to transact private business with the defendant's employés, he was a mere licensee, and was not entitled to recover for injuries sustained in using the elevator.—Muench v. Heinemann (Wis.) 800.

§ 2. Contributory negligence.

A child 25 months of age is not chargeable with contributory negligence.—O'Brien v. Wisconsin Cent. Ry. Co. (Wis.) 424.

In an action for death of a child, whether its parent was guilty of contributory negligence in failing to take proper care of it *held* a question for the jury.—O'Brien v. Wisconsin Cent. Ry. Co. (Wis.) 424.

§ 3. Actions.

Evidence in an action against the owner of a building, burned through his alleged negligence, for damages to adjacent property to which fire was communicated, considered, and *held* insufficient to justify submitting the case to the jury.—Balding v. Andrews (N. D.) 305.

In an action to recover from the owner of a burned building damages from the communication of the fire to other property, burden of proof *held* to be on plaintiff to establish both the cause of the fire and defendant's negligence. —Balding v. Andrews (N. D.) 305.

In an action for the death of plaintiff's intestate by being scalded by distillery slops on the breaking of a vat, evidence *held* to show defendant's negligence and that an order of nonsuit was therefore error.—Hupfer v. National Distilling Co. (Wis.) 809.

NEGOTIABLE INSTRUMENTS.

See "Bills and Notes."

NEWLY-DISCOVERED EVIDENCE.

Ground for new trial, see "Homicide," § 3; "New Trial," § 2.

NEW PROMISE.

To pay debt discharged in bankruptcy, see "Bankruptcy," § 2.

NEW TRIAL.

In criminal prosecutions, see "Homicide," § 3.
Necessity of motion for purpose of review, see "Appeal and Error," § 8.
Necessity of preservation of ruling on motion for new trial in bill of exceptions for purpose of review, see "Appeal and Error," § 16.
Opening or vacating judgment, see "Judgment," § 5.
Power of successor of deceased judge to grant, see "Judges," § 2.
Remand by appellate court for new trial, see "Appeal and Error," § 31.
Specification of errors in overruling motion for, see "Appeal and Error," § 19.

§ 1. Nature and scope of remedy.

The granting of a new trial *held*, on the facts, not an abuse of discretion.—Marr v. Burlington, C. R. & N. Ry. Co. (Iowa) 716.

A motion for a new trial is addressed to the discretion of the trial court, which will not be interfered with save in cases of abuse.—Marr v. Burlington, C. R. & N. Ry. Co. (Iowa) 716.

Code, §§ 3755, 4205, *held* to provide for distinct and different proceedings on applications for new trial.—Bevering v. Smith (Iowa) 1110.

The denial of a motion for a new trial, under Code, § 4205, *held* erroneous.—Bevering v. Smith (Iowa) 1110.

By failing to unite a motion for new trial with one for judgment, notwithstanding the verdict, the right thereafter to move for a new trial in the usual statutory way is not waived. —Nelson v. Grondahl (N. D.) 299.

§ 2. Grounds.

New trial for newly discovered evidence *held* properly refused.—Brennan v. Goodfellow (Iowa) 962.

Court *held* not to have abused its discretion in granting a new trial after directing a verdict for defendants.—Jones v. Jones (S. D.) 88.

§ 3. Proceedings to procure new trial.

There is no error in refusing a motion for new trial as to one count of the petition; plaintiff having, pending the motion, remitted the amount recovered thereon.—McElhone v. Wilkinson (Iowa) 868.

Under Code, § 3649, the period within which application may be made for a new trial under section 4205, when the clerk did not enter judgment as authorized by section 3777, *held* to begin to run from the date of the court's decision on motions for judgment, new trial, etc., and the entry of judgment thereon.—Bevering v. Smith (Iowa) 1110.

A motion for new trial for newly discovered evidence must be filed at the term.—Chadron Loan & Building Ass'n v. Scott (Neb.) 220.

A motion for new trial duly filed at one term of court may be heard at a subsequent term, and affidavits required may be filed at any time before final submission.—Chadron Loan & Building Ass'n v. Scott (Neb.) 220.

Where two or more parties join in a motion for new trial, unless it should be sustained as to all, it must be overruled as to all.—McCarthy v. Morgan (Neb.) 489.

Failure to give one day's notice in writing of the hearing of a motion for a new trial, *held* not to render the ruling on such motion erroneous.—Cochran v. Philadelphia Mortgage & Trust Co. (Neb.) 1051.

Under Code Civ. Proc. § 303, subd. 4, where a motion for a new trial is made on the minutes, the notice of intention must specify the particulars in which the evidence is insufficient, and the particular errors of law on which the moving party will rely.—Wenke v. Hall (S. D.) 103.

NEXT OF KIN.

See "Descent and Distribution."

NON OBSTANTE VEREDICTO.

Judgment notwithstanding verdict, see "Judgment."

NONRESIDENCE.

Effect on limitation, see "Limitation of Actions," § 1.

NONSUIT.

Before trial, see "Dismissal and Nonsuit."

NOTES.

Promissory notes, see "Bills and Notes."

Digitized by Google

Of appeal, defects in, as ground for dismissal of appeal, see "Appeal and Error," § 21.
Record of chattel mortgage as notice to purchaser, see "Chattel Mortgages," § 2.
Warning employés of danger, see "Master and Servant," § 3.

Of particular facts, acts, or proceedings.

See "Judicial Sales."
Action or process, see "Process," § 1.
Appeal, see "Appeal and Error," § 10.
Appraisal on foreclosure, see "Mortgages," § 10.
Defect in goods sold, see "Sales," § 6.
Defect in street, see "Municipal Corporations," § 12.
Foreclosure of mortgage, see "Mortgages," § 8.
Foreclosure sale, see "Mortgages," § 10.
Hearing before land officers, see "Public Lands," § 1.
Injuries from defects in streets, see "Municipal Corporations," § 12.
Intention to introduce certain witnesses, see "Criminal Law," § 12.
Redemption from tax sale, see "Taxation," § 6.
Taxation of costs, see "Costs," § 4.
Tax sale, see "Taxation," § 5.
Trespass by animals, see "Animals."

To particular classes of parties.

City clerk, see "Municipal Corporations," § 12.
Purchaser of land, see "Vendor and Purchaser," § 4.

Constructive notice of a deed is not constructive notice of a finding and decree not referred to in the deed.—Cushing v. Schoeneman (Neb.) 346.

NUISANCE.

Obstruction of streets, see "Municipal Corporations," § 11.
Opinion evidence, see "Evidence," § 10.

NUNC PRO TUNC.

Entry of judgment, see "Judgment," § 4.

OBJECTIONS.

For purpose of review, see "Appeal and Error," §§ 6, 18.
To appraisal on foreclosure, see "Mortgages," § 10.
To confirmation of foreclosure sale, see "Mortgages," § 10.
To depositions, see "Depositions."
To evidence, see "Criminal Law," § 11.

OBLIGATION OF CONTRACT.

Laws impairing, see "Constitutional Law," § 4.

OBSTRUCTIONS.

Of highways, see "Highways," § 3.
Of streets, see "Municipal Corporations," § 11.

OFFICERS.

Bribery, see "Bribery."
Fees of, as costs, see "Costs," § 3.
Judicial notice of official acts, see "Evidence," § 1.
Mandamus, see "Mandamus," § 2.
Presumptions as to official acts, see "Evidence," § 2.
Quo warranto, see "Quo Warranto."
Assessors of taxes, see "Taxation," § 2.
Bank officers, see "Banks and Banking," § 1.
Corporate officers, see "Corporations," §§ 5, 6.
County officers, see "Counties," § 1.
Municipal officers, see "Municipal Corporations," § 4.
Poor-law officers, see "Paupers," § 1.

§ 1. Rights, powers, duties, and liabilities.

When the law commits to any officer the duty of looking into facts and acting upon them, his discretion is quasi judicial.—Mitchell v. Clay County (Neb.) 673.

OPENING.

Judgment, see "Judgment," §§ 2, 5.

OPINION EVIDENCE.

In civil actions, see "Evidence," §§ 10–14.
In criminal prosecutions, see "Criminal Law," § 9.

OPINIONS.

Of courts, see "Courts," § 1.
Of jurors as affecting competency, see "Jury," § 1.

ORDER OF PROOF.

At trial, see "Trial," § 2.

ORDERS.

Appealability, see "Appeal and Error," § 3.
Extending time for settling statement of case on appeal, see "Appeal and Error," § 13.
Of county board, see "Counties," § 1.
Review of appealable orders, see "Appeal and Error."

ORDINANCES.

Licensing of hawkers and peddlers, see "Hawkers and Peddlers."
Municipal ordinances, see "Municipal Corporations," §§ 2, 3, 6, 10.

PARENT AND CHILD.

See "Bastards"; "Guardian and Ward"; "Infants."
Negligence of parent imputable to child, see "Negligence," § 2.
Transactions between, in fraud of creditors, see "Fraudulent Conveyances," § 1.

PAROL EVIDENCE.

In civil actions, see "Evidence," § 9.

PARTIES.

Admissions as evidence, see "Evidence," § 5.
Death ground for abatement, see "Abatement and Revival," § 3.
Domicile or residence as affecting venue, see "Venue," § 1.
Entitled to allege error, see "Appeal and Error," § 24.
Objections to defect of, for purpose of review, see "Appeal and Error," § 6.
Persons concluded by judgment, see "Judgment," § 9.
Persons entitled to compensation for property taken for public use, see "Eminent Domain," § 2.
Persons liable for bribery, see "Bribery."

Digitized by Google

Persons to whom payment of note may be made, see "Bills and Notes," § 5.
Transfer of interest ground for abatement, see "Abatement and Revival," § 2.

In actions by or against particular classes of parties.

See "Husband and Wife," § 2.
Stockholders, see "Corporations," § 4.

In particular actions or proceedings.

Criminal prosecutions, see "Criminal Law," § 1.
For appointment of receiver of corporation, see "Corporations," § 7.
For breach of contract, see "Contracts," § 5.
On appeal in condemnation proceedings, see "Eminent Domain," § 3.
On appeal or writ of error, see "Appeal and Error," §§ 4, 9.
To establish boundaries, see "Boundaries," § 2.
To restrain trespasses on mining property, see "Mines and Minerals," § 1.

To particular classes of conveyances, contracts, or transactions.

See "Contracts," § 2; "Fraudulent Conveyances," § 2; "Usury," § 1.

§ 1. Plaintiffs.
Where deceased sold apples to defendants in which another was interested, but before suit brought his administratrix settled with such other for his interest, she was entitled to sue for the entire balance of the account.—Wolkins v. Knight (Mich.) 445.

Under Ann. Code 1901, § 29, the owner of a judgment on which suit is brought is the real party in interest, though having no formal assignment of the judgment.—Linton v. Baker (Neb.) 251.

In an action by the grantor in a deed invalid under Rev. Codes, § 7002, for the use of the grantee, the grantor is the real party in interest, within the meaning of Rev. Codes, § 5221.—Galbraith v. Paine (N. D.) 258.

§ 2. New parties and change of parties.
The allowance of a substitution of a purchaser of a cause of action pendente lite, under Rev. Codes 1899, § 5234, is in the discretion of the court.—Sykes v. Beck (N. D.) 844.

The sole right to ask for a substitution of the purchaser of a right of action pendente lite, given by Rev. Codes 1899, § 5234, rests with the purchaser.—Sykes v. Beck (N. D.) 844.

§ 3. Defects, objections, and amendment.
A demurrer for defect of parties is proper when the pleadings show a deficiency of parties, but it is not the proper method of attack for an excess of parties; and where the only claim is that too many have been joined, a demurrer is properly overruled.—Olson v. Shirley (N. D.) 297.

PARTITION.

§ 1. Actions for partition.
Claim for maintaining the mother of the parties to partition suit *held*, on the facts, properly denied.—Clark v. Clark (Mich.) 924.

PARTNERSHIP.

Exemptions of partnership property from execution, see "Exemptions," § 1.

§ 1. The relation.
Lessor of business, conducted under name embodying his individual name, *held* liable for indebtedness incurred by lessee, without notice to creditor of lessor's retirement.—Davenport Gas & Electric Co. v. Reimers (Iowa) 1084.

Evidence examined, and *held* wholly ins cient to sustain an allegation of partnershi Agnew v. Omaha Nat. Bank (Neb.) 189.

§ 2. Rights and liabilities as to th persons.
In an action for the price of goods sold, dence *held* to require submission to the jury the question of the liability of defendant as p ner in the purchase of the goods.—Swofi Bros. Dry Goods Co. v. Cowgill (Neb.) 21

Where a partner conveys partnership p erty, and the assignment is concurred in by other member of the firm, the assignee have a superior right to the property over whose claim is based on a subsequent ass ment.—Ulrich v. McConaughey (Neb.) 645.

§ 3. Death of partner, and surviv partners.
Certain evidence *held* to show that transf of note and mortgage indorsed by surviv partner was prima facie the owner thereo Grether v. Smith (S. D.) 93.

In a suit to quiet title to land mortgaged partnership, *held*, on the facts, that a dismi of the complaint was erroneous.—Grether Smith (S. D.) 93.

§ 4. Dissolution, settlement, and counting.
Where a partner without notice takes s stantially all the ready money, and abscor remaining away eight months, he has no sta ing to demand an accounting after his cop ner has wound up the business.—Hart v. D rich (Neb.) 144.

PART PAYMENT.

Within statute of frauds, see "Frauds, Stat of," § 4.

PART PERFORMANCE.

Measure of damages for partial breach of c tract, see "Damages," § 3.
Of contract, see "Contracts," § 4.

PASSENGERS.

See "Carriers," § 2.

PATENTS.

Specific performance of contract for sale patented article, see "Specific Performanc § 1.

PAUPERS.

§ 1. Poor-law districts and officers.
In a prosecution of keeper of a county ho for illegally removing a county pauper to other county, it was no defense that such moval had been ordered by the superinte ents of the poor.—People v. Barlow (Mic 482.

§ 2. Settlement and removal.
Facts *held* to show that a pauper's legal r dence was in a county to which she remov with her foster parents.—People v. Barl (Mich.) 482.

PAYMENT.

See "Compromise and Settlement"; "Tende
Of costs, best and secondary evidence of, "Evidence," § 3½.
Part payment within statute of frauds, "Frauds, Statute of," § 4.
Subrogation on payment, see "Subrogation."
Waiver of forfeiture of lease by acceptance rent, see "Landlord and Tenant," § 2.

and Notes," § 5.
Claims against insolvent bank, see "Banks and Banking," § 1.
Checks on bank, see "Banks and Banking," § 2.
Compensation for property taken for public use, see "Eminent Domain," § 2.
Compensation for public improvements, see "Municipal Corporations," § 7.
Price of land sold, see "Vendor and Purchaser," § 3.
Subscription to stock, see "Corporations," § 3.
Taxes, see "Taxation," § 4.

§ 1. Requisites and sufficiency.
In replevin of a machine on which credit was allowed for an old machine, evidence *held* to warrant a finding that defendant's representation that he had paid for the old machine was true.—National Cash Register Co. v. Bonneville (Wis.) 558.

§ 2. Application.
In replevin of a machine on which a credit was allowed for an old machine, on defendant's representation that it had been paid for, when it was charged to him by a third person, plaintiff *held* not entitled to claim that, as defendant did not retain it, payments made on the account should be applied to other items of the account.—National Cash Register Co. v. Bonneville (Wis.) 558.

§ 3. Pleading, evidence, trial, and review.
In an action against decedent's estate for services rendered, entries in decedent's books in claimant's handwriting *held* sufficient to establish payment for such services.—Cummings v. Lynn (Iowa) 857.

PEDDLERS.

See "Hawkers and Peddlers."

PEDIGREE.

Competency of witnesses, see "Witnesses," § 2.

PENALTIES.

Failure to release mortgage, see "Mortgages," § 5.
Nonpayment of tax, see "Taxation," § 8.
Official misconduct, see "Corporations," § 5.
Under contracts, see "Damages," § 2.
Violation of railroad regulations, see "Railroads," § 5.
Violations of usury laws, see "Usury," § 2.

PENSIONS.

Exemption of pension money from taxation, see "Taxation," § 1.
Of policemen, see "Municipal Corporations," § 4.

PERCOLATING WATERS.

See "Waters and Water Courses," § 2.

PERPETUITIES.

Under Comp. Laws 1897, §§ 8796, 8797 (c. 237, §§ 14, 15), a suspension of the power of alienation not based on lives is void.—Casgrain v. Hammond (Mich.) 510.

A deed and declaration of trust *held* void as creating a perpetuity.—Casgrain v. Hammond (Mich.) 510.
Hearsay evidence, see "Evidence," § 7.
Judicial notice, see "Evidence," § 1.
Measure of damages, see "Damages," § 5.
Opinion evidence, see "Evidence," § 10.
Res gestæ, see "Evidence," § 3.
To employé, see "Master and Servant," §§ 3–6.
To licensee, see "Railroads," §§ 4–7.
To passenger, see "Carriers," § 2.
To traveler on highway, see "Highways," § 3; "Municipal Corporations," § 12.
To traveler on highway crossing railroad, see "Railroads," §§ 4–7.

PETITION.

For bridges, see "Bridges," § 1.
For disconnection of territory from city, see "Municipal Corporations," § 1.

PHOTOGRAPHS.

Admissibility in evidence, see "Criminal Law," § 4.

PHYSICIANS AND SURGEONS.

Testimony in criminal prosecutions, see "Criminal Law," § 9; "Homicide," § 1.

PIERS.

See "Navigable Waters," § 1.

PLEA.

In civil actions, see "Pleading," § 2.

PLEADING.

Amendment after limitation of Actions," § 1.
Answer on application to open judgment, see "Judgment," § 2.
Appealability of order overruling motion to strike, see "Appeal and Error," § 3.
Applicability of instructions to pleadings, see "Trial," § 7.
Construction and operation of instructions relating to pleadings, see "Trial," § 9.
Exceptions for purpose of review, see "Appeal and Error," § 7.
Harmless error in rulings on pleadings, see "Appeal and Error," § 29.
Objections for purpose of review, see "Appeal and Error," § 6.
Presumptions on appeal or writ of error, see "Appeal and Error," § 26.
Review of discretion of court as to allowing amendment of pleadings, see "Appeal and Error," § 27.
Tender of answer on application to open judgment, see "Judgment," § 5.
To sustain judgment, see "Judgment," § 2.

Allegations as to particular facts, acts, or transactions.

See "Customs and Usages"; "Damages," § 5; "Estoppel," § 2; "Usury," § 1.
Statute of frauds, see "Frauds, Statute of," § 7.

In actions by or against particular classes of parties.

See "Beneficial Associations"; "Municipal Corporations," § 12; "Principal and Agent," § 2; "Receivers," § 3.
Banks, see "Banks and Banking," § 2.
Foreign corporations, see "Corporations," § 8.
Master of vessel, see "Shipping," § 1.

Digitized by Google

POOR LAWS.

See "Paupers."

POSSESSION.

See "Adverse Possession."
Of demised premises, see "Landlord and Tenant," §§ 3, 5.
Retention by grantor in fraudulent conveyance, see "Fraudulent Conveyances," § 1.
Right of purchaser at foreclosure sale, see "Mortgages," § 10.
Sufficiency to sustain ejectment proceedings, see "Ejectment," § 1.

POST OFFICE.

Deposit of policy in post office as delivery, see "Insurance," § 3.

POWERS.

Creation by will, see "Wills," § 5.
Of attorney, see "Principal and Agent."
Of sale in mortgage, see "Mortgages," § 6.
Of trustee, see "Mortgages," § 3.

PRACTICE.

In land office, see "Public Lands," § 1.
Procedure of particular courts, see "Courts."

In particular civil actions or proceedings.

See "Contempt," § 1; "Ejectment"; "Mandamus," § 3; "Quo Warranto"; "Reformation of Instruments," § 2; "Replevin."
Accounting by executor or administrator, see "Executors and Administrators," § 6.
Condemnation proceedings, see "Eminent Domain," § 3.

Particular proceedings in actions.

See "Abatement and Revival"; "Affidavits"; "Appearance"; "Continuance"; "Costs"; "Damages," § 5; "Depositions"; "Dismissal and Nonsuit"; "Evidence"; "Execution"; "Judgment"; "Judicial Sales"; "Jury"; "Limitation of Actions"; "Parties"; "Pleading"; "Process"; "Reference"; "Stipulations"; "Trial"; "Venue."
Verdict, see "Trial," § 11.

Particular remedies in or incident to actions.

See "Attachment"; "Garnishment"; "Injunction"; "Receivers"; "Sequestration"; "Tender."

Procedure in criminal prosecutions.

See "Criminal Law."
Bastardy proceedings, see "Bastards," § 1.
Proceedings by grand jury, see "Grand Jury."

Procedure in exercise of special jurisdictions.

In equity, see "Equity."
In justices' courts, see "Justices of the Peace," § 3.

Procedure on review.

See "Appeal and Error"; "Certiorari," § 1; "Exceptions, Bill of"; "Justices of the Peace," § 4; "New Trial."

PREJUDICE.

Ground for reversal in civil actions, see "Appeal and Error," § 29.

PRELIMINARY INJUNCTION.

See "Injunction," § 3.

PREMIUMS.

For insurance, see "Insurance," §§ 4, 6.

PREPONDERANCE.

Of evidence, see "Evidence," § 14.

PRESCRIPTION.

Acquisition of easements, see "Easements," § 1.
Acquisition of rights, see "Adverse Possession," § 1; "Waters and Water Courses," § 4.
Establishment of highways, see "Highways," § 1.

PRESENTMENT.

Of claims against estate assigned for creditors, see "Assignments for Benefit of Creditors," § 2.
Of claims against estate of decedent, see "Executors and Administrators," § 4.

PRESUMPTIONS.

In civil actions, see "Evidence," § 2.
On appeal or error, see "Appeal and Error," § 26; "Criminal Law," § 18.

PRINCIPAL AND ACCESSORY.

See "Criminal Law," § 1.

PRINCIPAL AND AGENT.

See "Brokers."
Admissions by agent, see "Evidence," § 5.
Agency of partner for firm, see "Partnership," § 2.
Insurance agents, see "Insurance," § 2.
Notice to agent of defects in goods sold as notice to principal, see "Sales," § 6.
Statutes making agent holding securities personally liable for taxes thereon as denial of equal protection of laws, see "Constitutional Law," § 5.
Statutes making agent holding securities personally liable for taxes thereon as taking property without due process of law, see "Constitutional Law," § 6.
Taxation of property in custody of agent, see "Principal and Agent," § 1.

§ 1. Mutual rights, duties, and liabilities.

Evidence *held* to show that plaintiff was entitled to have an exchange of land set aside as procured by fraud of agent.—White v. Leech (Iowa) 709.

A purchase by an agent to sell, from his principal, without disclosing an offer from another, *held* not binding on the principal.—Rogers v. French (Iowa) 767.

An agent for the sale of machinery, whose commission is to be paid when notes taken on sales are collected, may sue his principal for his commission, where the principal has for an unreasonable time neglected to enforce such collection.—Westinghouse Co. v. Tilden (Neb.) 74.

§ 2. Rights and liabilities as to third persons.

Where the distinction between sealed and unsealed private contracts has been abrogated by

Digitized by Google

"Shipping"; "Trade-Marks and Trade-Names."
Adverse possession, see "Adverse Possession."
Constitutional guaranties of rights of property, see "Constitutional Law," § 6.
Protection of rights of property by injunction, see "Injunction," § 2.
Subject of chattel mortgage, see "Chattel Mortgages," § 1.
Subject to attachment, see "Attachment," § 1.
Subject to descent or distribution, see "Descent and Distribution," § 1.
Subject to execution, see "Execution," § 2.
Taking for public use, see "Eminent Domain."

PROTEST.

Against granting of liquor license, see "Intoxicating Liquors," § 1.

PROVINCE OF COURT AND JURY.

In civil actions, see "Trial," §§ 5–10.
In criminal prosecutions, see "Criminal Law," § 14.

PROXIMATE CAUSE.

Direct or remote consequences of injury, see "Damages," § 1.
Of injury to traveler on highway, see "Highways," § 3.

PUBLICATION.

Of libel, see "Libel and Slander," § 1.
Service of process, see "Process," § 1.

PUBLIC DEBT.

See "Counties," § 3; "Municipal Corporations," § 13; "Schools and School Districts," § 1; "States," § 1; "Towns," § 1.

PUBLIC IMPROVEMENTS.

By municipalities, see "Municipal Corporations," §§ 5–10.

PUBLIC LANDS.

§ 1. Survey and disposal of lands of United States.

A claimant to public land, exempted generally from an order of the Commissioner of the General Land Office confirming a claim in another, who allows over 30 years to elapse without moving in the matter, is guilty of laches, defeating his right.—Male v. Chapman (Mich.) 582.

The general exemption, in an order confirming a claim to public land, pursuant to Act Cong. Sept. 26, 1850, c. 69, 9 Stat. 469, providing for the settlement of claims for land at Sault Ste. Marie, *held* to exempt only claims found to exist by the officers empowered to act under that law.—Male v. Chapman (Mich.) 582.

A personal service of notice of a hearing before land officers for the confirmation of a claim to public land, under Act Cong. Sept. 26, 1850, c. 69, 9 Stat. 469, on the parties known to be interested, and service by publication, *held* sufficient to bind the parties acquiring title after the institution of the proceedings.—Male v. Chapman (Mich.) 582.

One entitled by law to pre-empt a tract of land under the timber culture act takes the land and all permanent improvements thereon of his lessor.—Tiernan v. Miller & Leith (Neb.) 661.

A party entering public lands as a homestead is entitled to possession, and cannot be enjoined from exercising his right by one who without right held a prior possession.—Tiernan v. Miller & Leith (Neb.) 661.

Under Const. art. 8, §§ 5, 6, and Laws 1890, p. 296, c. 136, the purchaser of school lands, who had made the first payment and received a contract of sale, had an interest subject to execution, under Rev. Code Civ. Proc. 1903, § 336.—Brooke v. Eastman (S. D.) 699.

PUBLIC SCHOOLS.

See "Schools and School Districts," § 1.

PUBLIC USE.

Taking property for public use, see "Eminent Domain."

PUBLIC WATER SUPPLY.

See "Waters and Water Courses," § 5.

PUNISHMENT.

For robbery, see "Robbery."
For violation of injunction, see "Injunction," § 4.

PUNITIVE DAMAGES.

See "Malicious Prosecution," § 3.

PUPILS.

See "Schools and School Districts," § 1.

QUANTUM MERUIT.

See "Work and Labor."

QUASHING.

Indictment or information, see "Indictment and Information," § 4.

QUESTIONS FOR JURY.

In civil actions, see "Trial," § 4.
In criminal prosecutions, see "Criminal Law," § 14.

QUIETING TITLE.

In husband or wife without concurrence of other, see "Husband and Wife," § 2.

§ 1. Right of action and defenses.

A person not in actual possession of land *held* entitled to sue to invalidate a trust thereof as a cloud on her title, under Rev. St. 1878, § 3186.—Casgrain v. Hammond (Mich.) 510.

Where the vendor in a contract for the sale of land conveyed it to a third party, and the vendee refused to carry out the contract with such third party, he is conclusively presumed to have elected to sue the vendor for breach of contract.—Meyers v. Markham (Minn.) 787.

§ 2. Proceedings and relief.

Under Code, § 4226, relating to taxation of costs in suits to quiet title, no costs can be taxed against defendants on whom no notice has been served.—Mock v. Chalstrom (Iowa) 909.

Digitized by Google

Where a petition to quiet title contains other allegations, constituting causes of action over which the court has no jurisdiction, such matters are surplusage.—Andersen v. Andersen (Neb.) 276.

A petition alleging that plaintiffs have a legal title to certain real estate, that defendant by his wrongful acts has cast a cloud on their title, with a prayer for general equitable relief, states a cause of action.—Andersen v. Andersen (Neb.) 276.

The fact that a complaint to determine adverse liens, under Laws 1901, p. 9, c. 5, states facts additional to those necessary, *held* not to render the complaint demurrable.—Blakemore v. Roberts (N. D.) 1029.

QUO WARRANTO.

§ 1. Nature and grounds.

Where, pending proceedings for the removal of a street commissioner, another was appointed, quo warranto was maintainable against the latter to determine the validity of such removal. —Hartwig v. City of Manistee (Mich.) 1067.

RAILROADS.

See "Street Railroads."

As employers, see "Master and Servant."

Carriage of goods and passengers, see "Carriers."

Rights of owner of elevator on right of way, see "Warehousemen."

§ 1. Location of road, termini, and stations.

The question solely of expense in the operation of a station or the diminution of profits will not justify the removal of a station, if public rights are affected thereby.—State v. Northern Pac. Ry. Co. (Minn.) 81.

The rights of the public, affected by the use of a railway station to such an extent that substantial interference therewith would be a disadvantage to the patrons of the company, should not be disregarded in an application to compel a railroad company to re-establish a station which it had removed.—State v. Northern Pac. Ry. Co. (Minn.) 81.

On an application for mandamus, on the petition of the railroad and warehouse commission, to re-establish a station which had been removed by defendant, the superior convenience of the railroad company in the operation of its road is not the sole consideration for change of station facilities.—State v. Northern Pac. Ry. Co. (Minn.) 81.

Order of railroad and warehouse commission, requiring defendant to re-establish a railway station at a village, and which has for more than 15 years depended on the station for railway facilities, *held* justified.—State v. Northern Pac. Ry. Co. (Minn.) 81.

§ 2. Right of way and other interests in land.

Where a certain section of railroad was laid on defendant's land without a right of way having been established, as required by Rev. St. 1898, § 1846, and the tracks were thereafter abandoned, a private owner maintaining a connecting track *held* not entitled to the maintenance of the tracks so abandoned.—Schneider v. Knickerbocker Ice Co. (Wis.) 542.

§ 3. Sales, leases, traffic contracts, and consolidation.

An agreement for the sale of the property of an insolvent railroad company, that the selling company and its guarantors should hold the purchasers harmless for the debts of the selling company, *held* unenforceable in equity for the benefit of bondholders of the selling company.—Randall v. Detro 567.

§ 4. Operation.

Evidence in an actio elevator built on a ra recover from the railro while preparing a car fo *held*, that the questio the railroad company cago, B. & Q. R. Co. v.

In an action for dea ing, that the fireman g tion to the deck of the not look ahead, and th obscured by a curve, O'Brien v. Wisconsin 424.

§ 5. —— Statutory, cial regulatio

Under Code, § 2073, i railroad engineer and o ure to stop his train be secting railroad, the offe if the engineer was una State v. Chicago, M. & 904.

The burden on the st railroad engineer was lia ure to stop his train at by Code, § 2073, was no the train did not stop.— St. P. Ry. Co. (Iowa) 9

In a suit against a rai failure to stop its train intersecting railroad, the establish its case beyond State v. Chicago, M. & 904.

Code, § 2073, imposing engineer and on the com stop at a crossing, is n punishing one person for —State v. Chicago, M. & 904.

Under Code, § 2073, i a railroad engineer and o failure to stop his train tersecting railroad, liabili pended on the liability o v. Chicago, M. & St. P. I

Rev. St. 1898, §§ 180 quire railroad companies to exceed six miles per h cities and villages at w maintained.—O'Brien v. Co. (Wis.) 424.

§ 6. —— Injuries to tracks.

Live stock straying in fences built by a railway of way *held* stock runn Code, § 2055, relating to t companies for failure to Dailey v. Chicago, M. & 778.

A fence built by a rai right of way *held* a railwa § 2055, relating to the lia panies for failure to fenc v. Chicago, M. & St. P.

In an action against a killing a mule, evidence overcome the prima facie the company's part.—Dail St. P. Ry. Co. (Iowa) 77

In an action against a killing a mule, evidence prima facie case of neglige part.—Dailey v. Chicago, (Iowa) 778.

Digitized by Google

Craig v. Wabash R. Co. (Iowa) 965.

In an action for the killing of a horse on defendant's track, defendant's negligence in operating the train *held* immaterial.—Craig v. Wabash R. Co. (Iowa) 965.

In an action for the killing of a horse on defendant's track, testimony to determine the place where the horse was, with reference to a highway crossing, when struck, *held* admissible.—Craig v. Wabash R. Co. (Iowa) 965.

In an action for the killing of a horse on defendant's railway track, evidence *held* to show that the collision occurred at a place where the company had the right to fence, but failed to do so.—Craig v. Wabash R. Co. (Iowa) 965.

In an action for the killing of a horse on defendant's track, the special finding of the jury *held* a finding that the horse was struck 56 feet from a highway crossing.—Craig v. Wabash R. Co. (Iowa) 965.

In an action against a railroad company for the killing of stock, a tender by defendant *held* sufficient basis for the recovery of double damages.—Black v. Minneapolis & St. L. R. Co. (Iowa) 984.

In an action against a railroad company for killing a steer, concession by plaintiff's counsel that plaintiff was not entitled to double damages *held* not to estop him from afterwards claiming double damages.—Black v. Minneapolis & St. L. R. Co. (Iowa) 984.

Under Code, § 2055, notice to a railroad company demanding damages for the killing of stock *held* sufficient.—Black v. Minneapolis & St. L. R. Co. (Iowa) 984.

Under Rev. Codes 1899, § 2978, evidence *held* to raise a prima facie presumption of negligence in a railroad company in the killing of cattle, without further proof.—Wright v. Minneapolis, St. P. & S. S. M. Ry. Co. (N. D.) 324.

Plaintiff *held* guilty of such contributory negligence as to defeat an action for the killing of a horse by a train.—Wright v. Minneapolis, St. P. & S. S. M. Ry. Co. (N. D.) 324.

Whether a railroad section foreman was guilty of negligence in failing to close a gate in the fence inclosing a railroad track *held*, under the facts, for the jury.—Atkinson v. Chicago & N. W. Ry. Co. (Wis.) 529.

The failure of the owner of a horse to close a gate in the fence inclosing a railroad track *held* not negligence, precluding a recovery for the killing of the horse, escaping from a pasture sufficiently fenced, and then through the open gate in the railroad fence, and on the track.—Atkinson v. Chicago & N. W. Ry. Co. (Wis.) 529.

There was no contributory causal connection between a person's failure to close a gate in a railroad fence, and his horse a week later passing through it, and on the track, where it was killed by a train when the gate was closed several times during the interval.—Atkinson v. Chicago & N. W. Ry. Co. (Wis.) 529.

Under the statute, a railroad company *held* liable for killing a horse, escaping from a pasture sufficiently fenced, and then passing through an open gate upon the railroad track, where it was killed by a train.—Atkinson v. Chicago, & N. W. Ry. Co. (Wis.) 529.

§ 7. —— Fires.

In an action against a railroad company for setting fire to certain hay adjacent to the right of way, evidence as to sparks thrown from engines other than the one claimed to have set the fire *held* admissible.—Black v. Minneapolis & St. L. R. Co. (Iowa) 984.

that the hay was set on fire by sparks from the locomotive.—Black v. Minneapolis & St. L. R. Co. (Iowa) 984.

In an action against a railroad company for damages caused by burning part of a meadow, measure of damages stated.—Black v. Minneapolis & St. L. R. Co. (Iowa) 984.

RAPE.

Credibility of witnesses, see "Witnesses," § 4.
Best and secondary evidence, see "Criminal Law," § 4.
Harmless error, see "Criminal Law," § 18.
Hearsay evidence, see "Criminal Law," § 7.
Res gestæ, see "Criminal Law," § 5.
Service of list of witnesses, see "Criminal Law," § 12.

§ 1. Prosecution and punishment.

Where an indictment for rape of a child under the age of consent charges the crime to have been committed with violence and against her will, the jury can convict if they believe accused had intercourse with her, though her testimony as to her resistance and want of consent was not believed.—State v. Bebb (Iowa) 714.

Where prosecutrix is attempting to explain her silence, testimony by her as to her complaint to her aunt, made more than three months after the crime, explaining the delay, is not incompetent.—State v. Bebb (Iowa) 714.

Under Code, § 4756, an indictment for rape, stating prosecutrix to have been under the age of consent and alleging force, *held* sufficient to warrant conviction on proof that prosecutrix was under the age of consent.—State v. Scroggs (Iowa) 723.

On a prosecution for statutory rape, an instruction *held* not erroneous as belittling the quantum of proof as to prosecutrix's age.—State v. Scroggs (Iowa) 723.

On a prosecution for statutory rape, an instruction that the female's testimony as to her age might be based on information from her parents *held* not erroneous.—State v. Scroggs (Iowa) 723.

On a prosecution for statutory rape, an instruction that the female was competent to testify as to her age did not indicate to the jury that her appearance and apparent maturity might not be considered on such question.—State v. Scroggs (Iowa) 723.

On a prosecution for statutory rape, an instruction that the jury were not to consider whether prosecutrix consented or not, or whether defendant knew her age, if she was, in fact, under the age of consent, *held* not erroneous.—State v. Scroggs (Iowa) 723.

RATE.

Of interest, see "Interest," § 2.
Of speed of trains, see "Railroads," § 5.

RATIFICATION.

Of act of agent, see "Principal and Agent," § 2.
Of act of broker, see "Brokers," § 4.
Of act of insurance agent, see "Insurance," § 2.
Of contract, see "Municipal Corporations," § 7.
Of conveyance of incompetent, see "Insane Persons," § 2.
Of ordinance, see "Municipal Corporations," § 6.

REAL ACTIONS.

See "Ejectment"; "Forcible Entry and Detainer," § 1.

Digitized by Google

REAL-ESTATE AGENTS.

See "Brokers."

REBUTTAL.

Evidence, see "Trial," § 2.

RECEIVERS.

Of corporations in general, see "Corporations," § 7.
Of insolvent banks, see "Banks and Banking," § 1.

§ 1. Title to and possession of property.
In a suit to cancel mortgages executed to an association, the court *held* authorized to determine the rights of the parties against the association, though a general receivership was pending.—Manker v. Phœnix Loan Ass'n (Iowa) 982.

§ 2. Management and disposition of property.
A receiver's sale of property must be made within the time fixed by the order of the court.—Morrison v. Lincoln Sav. Bank & Safe Deposit Co. (Neb.) 230.

§ 3. Actions.
In a suit to cancel mortgages to an association, a decree cannot be rendered against receivers, in the absence of allegation and proof of leave to sue them.—Manker v. Phœnix Loan Ass'n (Iowa) 982.

Where the answer denies the representative character of plaintiff, who sues as a receiver, he must show that he was duly appointed and qualified.—Hagerman v. Thomas (Neb.) 631.

One suing as receiver should state sufficient facts as to his appointment, so that the court may know that it was legally made.—Hagerman v. Thomas (Neb.) 631.

§ 4. Accounting and compensation.
The court, in fixing the compensation of a receiver, can only consider the value of his services to the business of which he took charge.—Stearns Paint Mfg. Co. v. Comstock & McQuiston (Iowa) 869.

Evidence on the issue of proper allowance to a receiver for his services for bookkeeper and attorney's fees examined, and *held*, that an allowance of $100 per month for the receiver, $50 per month for the bookkeeper, and $300 for attorney's fees should be made.—Stearns Paint Mfg. Co. v. Comstock & McQuiston (Iowa) 869.

RECITALS.

In bill of exceptions on appeal, see "Appeal and Error," § 17.

RECORDS.

As evidence, see "Evidence," §§ 3½, 8.
Effect of failure to record chattel mortgage, see "Fraudulent, Conveyances," § 1.
Marriage registers, see "Marriage."

Of judicial proceedings.

See "Judgment," § 4.
Abstract for purpose of review, see "Appeal and Error," § 13.
On appeal from foreclosure of mortgage, see "Mortgages," § 12.
Transcript on appeal or writ of error, see "Appeal and Error," § 13; "Criminal Law," § 18.

Of particular instruments.

See "Chattel Mortgages," §§ 2, 4.

Where the examiner, in a petition under the Torrens Law, suggests that a certain party named be made a defendant, but the suggestion is not observed, the ju
tered is void as to such
in privity with him.—De
704; Same v. National
Id.

In publishing the sur
Laws 1901, p. 384, c. 2
rens Act," a compliance
section 20, p. 353, of s
summons shall be served
unknown defendants by
cient.—Dewey v. Kimb
v. National Bond & Sec

RECOUP

In action for rent, see "
§ 4.

REDEM

From mortgage, see "M
From sale on execution,
From tax sales, see "T

REFER

§ 1. Nature, ground
erence.
Where an equitable co
a purely legal action, it
a general objection to
Keith (Neb.) 59.

§ 2. Report and find
The report of a referee
until confirmed.—Citizen
(Neb.) 591.

Where, in a suit by a
ident and cashier with h
cealed falsification of hi
ment with the bank, the
certain specific findings
aside, and the court re
hearing had before the c
tiff, *held*, that in so doi
the report of the refere
parts thereof which it
judgment in favor of
cause of action was susta
the referee, which were
findings of the court.—C
slager (Neb.) 591.

REFORMATION OF

§ 1. Right of action
Where a contract cov
the parties were ignorar
its application to the rea
gain.—Shelby v. Creighto

Where a contract by
ministrator for the sale
to convey more than wa
reform the contract.—She
382.

Courts of equity have
ten instruments to confo
tion of the parties.—Fo
(N. D.) 301.

In an action to reform,
take, a warranty deed, t
ties' intention that it sho
gage, equity will not gr
sence of fraud, unless i
the mistake was a mu
Van Auken (N. D.) 301.

§ 2. Proceedings and
Notes secured by a mor
will not be reformed fo
proof is clear and satisfa
(Iowa) 759.

Digitized by Google

Auken (N

Eviden
take, a w
as a mor
cific, and
(N. D.)

See "Re
Marriag

See "N

See "C
Of mo

§ 1.
Whe
extend
releasi
rests
Deerin

Of evi
Of evi
inal

Subsc

An
ble f
the
gelic

Crea

W
tesy
tion
wer
not
men

P
real
the
000
fus
the
Wi

Of
I

E

C

C

Digitized by Google

RES GESTÆ.

In civil actions, see "Evidence." § 3.
In criminal prosecutions, see "Criminal Law," § 5.

RESIDENCE.

Of pauper, see "Paupers," § 2.
Settlement of insane person, see "Insane Persons," § 1.

RES JUDICATA.

See "Judgment," §§ 8, 9.

RESTRAINT OF TRADE.

Trusts and other combinations, see "Monopolies," § 1.

RESULTING TRUSTS.

See "Trusts," § 1.

RETURN.

Of foreclosure sale, see "Mortgages," § 10.
Of process in general, see "Process," § 1.

REVENUE.

See "Taxation."

REVIEW.

See "Appeal and Error"; "Certiorari"; "Criminal Law," § 18; "Justices of the Peace," § 4.
Of condemnation proceedings, see "Eminent Domain."
Of election contests, see "Elections," § 1.

REVIVAL.

Of action, see "Abatement and Revival," § 3.

REVOCATION.

Of agency of broker, see "Brokers," § 1.
Of probate of will, see "Wills," § 4.

REWARDS.

Evidence *held* to show plaintiff entitled to a reward offered for a lost boy.—Peterson v. Mark (Mich.) 926.

RIGHT OF WAY.

See "Easements."
Of railroads, see "Railroads," § 2.

RIPARIAN RIGHTS.

See "Navigable Waters," § 1; "Waters and Water Courses," § 1.

RISKS.

Assumed by employé, see "Master and Servant, § 5.
Within insurance policy, see "Insurance," § 8.

ROADS.

See "Highways."
Streets in cities, see "Municipal Corporations," §§ 11, 12.

ROBBERY.

In a prosecution for robbery, evidence *held* sufficient to sustain a conviction.—State v. Brafford (Iowa) 710.

In a prosecution for robbery in a public city street, a sentence of 17 years in the penitentiary *held* not excessive.—State v. Brafford (Iowa) 710.

SALARIES.

Mandamus to compel payment, see "Mandamus," § 2.

SALES.

Amendment of pleadings in action for price of goods, see "Pleading," § 4.
By auction, see "Auctions and Auctioneers."
By hawkers or peddlers, see "Hawkers and Peddlers."
Measure of damages for breach of contract of sale, see "Damages," § 3.
Of intoxicating liquors, see "Intoxicating Liquors."
Of land to enforce special assessments, see "Municipal Corporations," § 9.
Of property exempt from execution, see "Exemptions," § 2.
Of property of decedent, see "Executors and Administrators," § 2.
Of property of infant under order of court, see "Guardian and Ward," § 3.
Of public lands, see "Public Lands," § 1.
Of railroads, see "Railroads," § 3.
Of realty, see "Vendor and Purchaser."
On execution, see "Execution," § 4.
On foreclosure of mortgage, see "Mortgages," §§ 6, 10.
On order or judgment of court, see "Judicial Sales."
Parol evidence as to contract of sale, see "Evidence," § 9.
Pleading different defenses together in action for price of goods, see "Pleading," § 2.
Receiver's sales, see "Receivers," § 2.
Regulation of, see "Commerce," § 1.
Requirements of statute of frauds, see "Frauds, Statute of," § 4.
Tax sales, see "Taxation," § 5.

§ 1. Requisites and validity of contract.

An offer to sell ice *held* presumed to be for cash on delivery, so that an acceptance on terms, "will weigh and settle promptly," is not unconditional, and therefore will not effect a contract.—Rogers v. French (Iowa) 767.

§ 2. Construction of contract.

Defendant's offer *held* merely an acceptance of plaintiff's proposition to sell ice as their agent, so that his subsequent acceptance as a purchaser in his own right did not effect a contract.—Rogers v. French (Iowa) 767.

§ 3. Modification or rescission of contract.

To warrant rescission of a sale for false representations, it must appear that they were false and that the injured party believed and acted upon them.—Korbel v. Skocpol (Neb.) 1022.

Evidence *held* insufficient to authorize a rescission of the sale of a horse on the ground of fraudulent representation.—Korbel v. Skocpol (Neb.) 1022.

§ 4. Performance of contract.

Acceptance by a purchaser of materials tendered by the seller after the time when the same was to be furnished *held* not a waiver of the purchaser's right to damages for delay.—Medart Patent Pulley Co. v. Dubuque Turbine & Roller Mill Co. (Iowa) 770.

Digitized by Google

A purchaser of materials, who paid the price, though the seller failed to furnish the same in time and refused to allow damages, *held* not entitled to set up a claim for damages when sued for goods subsequently sold.—Medart Patent Pulley Co. v. Dubuque Turbine & Roller Mill Co. (Iowa) 770.

§ 5. Operation and effect.

Title to hay *held* to pass by a sale on credit, with privilege of allowing it to remain a while, so as to make the purchaser liable for purchase money where the hay was accidentally burned before removal, though it was to be weighed as removed to ascertain its quantity.—Allen v. Elmore (Iowa) 769.

Contract as to transfer of goods considered, and transferee *held* a purchaser, and that the title of the goods at once passed to him.—Buffum v. Descher (Neb.) 352.

§ 6. Warranties.

A sale of personalty by description indicating quality *held* not a warranty for the breach of which the vendee can recover damages.—Neff v. McNeeley (Neb.) 150.

Notice to the agent of a vendor of defects in a machine, obtained from assisting in setting it up, *held* not such a notice as complied with the conditions of the warranty.—Heagney v. J. I. Case Threshing Mach. Co. (Neb.) 175.

Vendors under a contract of sale assigned certain goods to the purchaser, and negotiated a draft for the amount to a bank, which delivered the goods and collected the draft. *Held*, that the transaction did not substitute the bank for the vendors, so as to render it liable for breach of warranty.—German-American Sav. Bank v. Craig (Neb.) 1023.

§ 7. Remedies of seller.

In an action for the price of personalty, question as to the reasonableness of time within which offer to return was made after discovery of defects *held* a question for the jury.—Cole v. Laird (Iowa) 744.

In an action for the price of personalty, evidence *held* sufficient to take the case to the jury on the issue of rescission of the contract.—Cole v. Laird (Iowa) 744.

In an action for the price of goods sold, where the defense is payment to an agent, an instruction that the burden of proof was on defendant to show such payment, and the authority of the agent, *held* to sufficiently submit the questions involved.—Southern Pine Lumber Co. v. Fries (Neb.) 71.

In a suit for an alleged breach of contract of sale, the good will cannot be recovered for as an element of damage.—Paxton & Gallagher v. Vadbouker (Neb.) 378.

An instruction as to rescission of a contract *held* erroneous, in the absence of any plea of a rescission or evidence thereof.—Ferris v. Marshall (Neb.) 602.

In an action for refusing to carry out a contract to purchase gravel, plaintiff need not prove both an offer of the gravel, to which no objection was made, and that the gravel was suitable.—Parkins v. Missouri Pac. Ry. Co. (Neb.) 683.

The refusal of the seller of a harvesting machine to perform its part of the contract to repair the machine, will result in a failure of consideration for the note for the price.—Warder, Bushnell & Glessner Co. v. Myers (Neb.) 992.

§ 8. Remedies of buyer.

In an action for the price of a windmill, defendant *held* not entitled to go to the jury on the issue of breach of warranty.—Cole v. Laird (Iowa) 744.

Where a contract of warranty with a machine sold provided for a waiver of all claim for damages on account of the nonperformance of any of the machinery sold, on breach of the warranty, the only relief allowed the purchaser was to return the article sold and reclaim consideration.—Heagney v. J. I. Case Threshing Mach. Co. (Neb.) 175.

Evidence in an action by the purchaser of a binder to recover on an alleged breach of warranty, in that the machine did not do good work, *held* to sustain verdict for defendant.—Rosso v. Milwaukee Harvester Co. (Neb.) 213.

In an action on a note, an answer that it was given in payment for harvesting machine sold under contract, with warranty, which wholly failed, *held* to state a cause of action.—Warder, Bushnell & Glessner Co. v. Myers (Neb.) 992.

§ 9. Conditional sales.

An instrument *held* to constitute a conditional sale and not an unconditional one with mortgage.—American Harrow Co. v. Deyo (Mich.) 1055.

SATISFACTION.

See "Compromise and Settlement; "Payment"; "Release."

Of mortgage, see "Mortgages," § 5.

SCHOOL LANDS.

See "Public Lands," § 1.

SCHOOLS AND SCHOOL DISTRICTS.

Rights of city and county treasurers as to school taxes, see "Taxation," § 10.

§ 1. Public schools.

Under Comp. Laws 1897, § 4812, a contract employing one to teach, who has not at the time a qualifying certificate, is not binding.—McCloskey v. School Dist. No. 5 of Wheatland Tp. (Mich.) 18.

Under a notice of the school meeting a vote *held* not a general appropriation of $1,200 for a specified purpose, but an appropriation of that sum from the surplus of a particular fund.—Banhagel v. School Board of School Dist. No. 1 (Mich.) 506.

A finding that a surplus of a school district tax for a previous year had been appropriated to school purposes for the succeeding year, within Comp. Laws 1897, § 4665, subd. 12, and was therefore not subject to appropriation to pay relator's claim, *held* not justified by the evidence.—Banhagel v. School Board of School Dist. No. 1 (Mich.) 506.

A father may maintain an action to compel the directors of a school district to allow his child to attend a school of district in which such child is a bona fide resident.—Mizner v. School Dist. No. 11 of Sherman County (Neb.) 128.

Where a child is wrongfully denied admission to a public school, an injunction may issue to restrain the directors from interfering with her attendance.—Mizner v. School Dist. No. 11 of Sherman County (Neb.) 128.

Evidence *held* to support a finding that a child was a bona fide resident of a certain school district.—Mizner v. School Dist. No. 11 of Sherman County (Neb.) 128.

The lands granted to North Dakota by Congress for educational purposes, and the proceeds thereof, constitute a permanent trust fund, the income of which alone may be used by the state, and then only for the support of such schools as are designated by the enabling act and the state Constitution.—State v. McMillan (N. D.) 310.

Digitized by Google

Laws 1903, p. 54, c. 49, authorizing the issuance of $60,000 in bonds for the State Normal School at Valley City, and appropriating a sufficient portion of the interest and income dedicated to the support of that institution to repay the principal and pay the interest on the sum so borrowed, *held* unconstitutional, as a diversion of the school funds to the payment of a state debt, in violation of the enabling act and Const. §§ 153, 154, 156, 159, 160, 162, 165, 205.—State v. McMillan (N. D.) 310.

Where the board of university and school lands has made an investment of the permanent school fund in invalid bonds, the State Treasurer acts in accordance with his legal duty as custodian of the fund in refusing to pay a warrant drawn on him for the purchase price.—State v. McMillan (N. D.) 310.

Const. § 162, restricting investments of permanent school fund to four classes of securities, one of which is "bonds of the state of North Dakota," includes only such state bonds as are within the constitutional debt limit, and so certified, and the payment of which is secured by a provision for an irrepealable tax levy.—State v. McMillan (N. D.) 310.

Under Rev. St. 1898, § 4971, the word "town," in section 1074, relative to levy of taxes by the county board, *held* to mean a taxing district, whether town, city, or village.—State v. Hunter (Wis.) 921.

The nature of a school tax levied by a county board *held* not affected by a misdescription of it in the warrant as a county school tax.—State v. Hunter (Wis.) 921.

Under Rev. St. 1898, §§ 1074, 1076, 1079, *held*, that a resolution of the county board was a levy of taxes as to the school tax, as well as the county tax.—State v. Hunter (Wis.) 921.

Rev. St. 1898, § 554, relative to apportionment of the state school fund, *held* not to show that the power to levy the school tax for a taxing district is in the district, and not in the county board, under section 1074.—State v. Hunter (Wis.) 921.

SEALS.

On contracts of agency, see "Principal and Agent," § 2.

All distinctions which had theretofore existed between unsealed contracts and contracts under seal were abrogated by Laws 1899, p. 88, c. 86, which abolished the use of private seals.—J. B. Streeter, Jr., Co. v. Janu (Minn.) 1128.

SEARCHES AND SEIZURES.

See "Fish."

SECONDARY EVIDENCE.

In civil actions, see "Evidence," § 3½.
In criminal prosecutions, see "Criminal Law," § 4.

SEDUCTION.

Harmless error, see "Criminal Law," § 18.

§ 1. Criminal responsibility.

On a prosecution for seduction, certain instructions *held*, under the evidence, not misleading.—State v. Stolley (Iowa) 707.

On a prosecution for seduction, certain evidence *held* to raise a question for the jury as to whether there was prior unchastity, such as to prevent the intercourse constituting seduction.—State v. Stolley (Iowa) 707.

On a prosecution for seduction, certain evidence *held* to amount to a showing of seductive arts.—State v. Stolley (Iowa) 707.

On a prosecution for s
the woman's father, the
did not desire the prosec
defendant.—State v. Stoll

SELF-DEI

See "Assault and Batter

SELF-SERVING D

As evidence, see "Eviden

SEPARA

See "Husband and Wife,

SEQUESTI

Fact that judgment de
person's hands may elud
ground for equitable rel
burn (Iowa) 978.

Bill in equity to seques
debtor on which creditor
proper remedy.—Bitzer
978.

SERVI

Of notice of hearing bef
"Public Lands," § 1.
Of process, see "Process,

SERVI(

See "Master and Servan
Labor."
In moving logs, see "Log

SERVITI

See "Easements."
Compelling set-off of ju
ment," § 6.

SETTLEI

See "Account Stated"; "
tlement"; "Payment";
By executor or administ
and Administrators," §
By guardian of infant,
Ward," § 5.
Of insane person, see "In
Of pauper, see "Paupers,

SEVERABLE C

See "Master and Servant,

SEWE

Defects or obstructions,
porations," § 12.

SHERIFFS AND (

Disqualification of deput
mony to take charge o
Law," § 17.
Fees of, as costs, see "Co

§ 1. Appointment, tenure.

The title of a deputy sh
not be attacked collatera
compel the clerk to tax a
the deputy for service of
v. Lake County (S. D.) 7(

Digitized by Google

A deputy sheriff *held* a de facto officer, though he had not complied with Pol. Code, § 1818, and service made by him valid.—Williamson v. Lake County (S. D.) 702.

§ 2. Powers, duties, and liabilities.

In an action against a sheriff for refusing to sell land on execution, *held* proper to render a decree directing the sale, but exonerating the sheriff, where no damages were sustained.—Porter v. Trompen (Neb.) 226.

SHIPPING.

§ 1. Master.

Variance between pleading and evidence *held* not to exist in suit by master of tug for wages.—DeLand v. Hall (Mich.) 449.

Evidence in a suit by the master of a tug for wages *held* not to show a compromise verdict.—DeLand v. Hall (Mich.) 449.

SIGNATURES.

To judgment, see "Judgment," § 4.

SOLDIERS.

Soldiers' homes, see "Army and Navy."

SPECIAL LAWS.

See "Statutes," § 1.

SPECIFICATION OF ERRORS.

On appeal or writ of error, see "Appeal and Error," §§ 10, 19, 20.

SPECIFIC PERFORMANCE.

Of contract for conveyance of homestead, see "Homestead," § 1.

§ 1. Contracts enforceable.

A father's agreement to loan a certain sum to his son, who should pay interest thereon during the father's life, and that the loan should be canceled on the father's death, *held* enforceable in equity.—Sauer v. Nehls (Iowa) 759.

Transaction relating to a sale of land *held* not to constitute a contract for the sale thereof, in the absence of certainty as to the number of acres and an offer to pay for the actual acreage at the price stated.—Mathes v. Bell (Iowa) 1093.

A contract for forming a company to manufacture a patented article *held* too indefinite for specific performance.—Brown v. Swarthout (Mich.) 951.

An agreement to execute a mortgage on growing crops may be specifically enforced.—Sporer v. McDermott (Neb.) 232, 659.

A covenant in an unrecorded lease for five years that the lessee shall yearly execute a chattel mortgage on the crops to secure the rent will be specifically enforced against the lessee and those claiming title to the crops after suit brought to establish the landlord's lien.—Ryan v. Donley (Neb.) 234.

A petition in an action for specific performance *held* insufficient where it relies on a written contract which contains no mutual promises, but is only a memorandum for a contract.—Fisher v. Buchanan (Neb.) 339.

An agreement to devise land may be specifically enforced.—Best v. Grolapp (Neb.) 641.

It is sufficient to authorize specific performance of a contract to devise land, though there was no express promise to make a will.—Best v. Grolapp (Neb.) 641.

Part performance, of such a character that the court cannot restore the promisee to the situation in which he was when an agreement was made to devise land or compensate him in damages, is sufficient to take the case out of the statute of frauds.—Best v. Grolapp (Neb.) 641.

A verbal contract for conveyance of land cannot be enforced, where no change of possession took place.—Bradt v. Hartson (Neb.) 1008.

A suit to enforce the specific performance of a contract will not lie, where the evidence fails to show that the contract was ever delivered to plaintiff or ever came into his possession.—Bradt v. Hartson (Neb.) 1008.

Vendee in contract for sale of land *held* entitled to specific performance.—Watkins v. Youl (Neb.) 1042.

§ 2. Good faith and diligence.

Where, under a contract for the sale of realty, the conditions to be performed are concurrent, plaintiff in an action for specific performance must allege and prove performance or a tender thereof.—Fisher v. Buchanan (Neb.) 339.

§ 3. Proceedings and relief.

In a suit to enforce specific performance of a contract to sell land, executed by an agent without authority, *held* not necessary for defendant to interpose a special plea, confessing the agency and alleging an excess of authority.—Staten v. Hammer (Iowa) 964.

SPEED.

Of trains, see "Railroads," § 5.

SPIRITUOUS LIQUORS.

See "Intoxicating Liquors."

STARE DECISIS.

See "Courts," § 1.

STATEMENT.

By accused, admissibility in evidence, see "Criminal Law," § 5.
By witness inconsistent with testimony, see "Witnesses," § 4.
Of case or facts for purpose of review, see "Appeal and Error," § 13.

STATES.

Courts, see "Courts."
Decisions of United States Supreme Court as authority in state courts, see "Courts," § 1.
Executive power, see "Constitutional Law," § 2.
Mandamus to state officers, see "Mandamus," § 2.
Presumptions as to laws of other states, see "Evidence," § 2.

§ 1. Fiscal management, public debt, and securities.

Bonds issued under Laws 1903, p. 54, c. 49, *held* void, as exceeding debt limit prescribed by Const. § 182.—State v. McMillan (N. D.) 310.

Laws 1903, c. 49, authorizing the issuance of $60,000 in bonds for the Valley City Normal School, *held* void for failing to provide for a tax levy to pay the same, as required by Const. § 182.—State v. McMillan (N. D.) 310.

State Normal School bonds without the certificates required by Const. § 187, *held* void.—State v. McMillan (N. D.) 310.

Digitized by Google

STATUTES.

Laws impairing obligation of contracts, see "Constitutional Law," § 4.

Provisions relating to particular subjects.

See "Bastards," § 1; "Bridges," § 1; "Costs," § 3; "Descent and Distribution"; "Food"; "Intoxicating Liquors"; "Mechanics' Liens"; "Quieting Title," § 1; "Railroads," § 5; "Schools and School Districts"; "Taxation"; "Telegraphs and Telephones," § 1; "Trusts," §§ 1, 4; "Usury," § 1.

Alimony, see "Divorce," § 2.

Appointment of administrator, see "Executors and Administrators," § 1.

Indorsement of witnesses on indictment or information, see "Criminal Law," § 12.

Remainders, see "Wills," § 5.

Special assessments, see "Municipal Corporations," § 8.

State indebtedness, see "States," § 1.

Statute of frauds, see "Frauds, Statute of."

§ 1. General and special or local laws.

Laws 1903, c. 659, c. 364, authorizing village not indebted in excess of $3,000 besides its bonded indebtedness, to issue bonds to the amount of such indebtedness, *held* not a special act.—Kaiser v. Campbell (Minn.) 916.

§ 2. Subjects and titles of acts.

Title of Act 1901 (Loc. Acts 1901, p. 65, No. 303) incorporating the village of Fairview *held* sufficient to cover a provision for the disposition of a fund for the improvement of a highway.—Paye v. Grosse Pointe Tp. (Mich.) 1077.

§ 3. Construction and operation.

A statute which provides a summary method by which a party may be deprived of the control of his property or his title thereto must be strictly construed.—Omaha Sav. Bank v. Rosewater (Neb.) 68.

STATUTES CONSTRUED.

UNITED STATES.

STATUTES AT LARGE.

1850, Sept. 26, ch. 69, 9 Stat. 469 582
1890, June 30, ch. 639, § 1, 26 Stat. 187 [U. S. Comp. St. 1901, p. 3757] 873
1891, Feb. 10, ch. 130, 26 Stat. 746 [U. S. Comp. St. 1901, p. 3703]..... 873
1895, March 2, ch. 193, § 1, 28 Stat. 964 [U. S. Comp. St. 1901, p. 3757] 873
1898, July 1, ch. 541, § 70, subd. 5, 30 Stat. 566 [U. S. Comp. St. 1901, p. 3451] 212

REVISED STATUTES.

§§ 4747, 4766, 4783 [U. S. Comp. St. 1901, pp. 3279, 3286, 3297] 873
§ 5486, as amended by Act Feb. 10, 1891, ch. 130, 26 Stat. 746 [U. S. Comp. St. 1901, p. 3703] 873

COMPILED STATUTES 1901.

Pages 3279, 3286, 3297... 873
Page 3451 212
Pages, 3703, 3757..... 873

IOWA.

CONSTITUTION.

Art. 1, § 8..... 730
Art. 11, § 3.....1096

CODE 1873.

§§ 471, 473, 489..... 883
§ 880 977
§ 2599 752

CODE 1897.

§ 325 855
§ 717 899
§ 753 1105
§ 816 754
§ 1011 878
§ 1309 873
§§ 1312, 1313 878
§ 1320 .....878, 967
§§ 1356, 1360..... 878
§ 1467 952
§§ 1882, 1883 747
§ 1898 977
§ 2055 .....778, 985
§ 2071 774
§ 2073 904
§§ 2432, 2448..... 739
§ 2918 905
§ 2985 858
§ 3154 863
§§ 3189, 3190 895
§ 3281 952
§ 3305 857
§ 3366 776
§ 3447 905
§ 3453 738
§ 3499 961
§ 3601 1089
§ 3620 744
§§ 3755, 3777 1110
§§ 4019, 4020.....1104
§ 4045 972
§ 4091 et seq 760
§§ 4128, 4130, 4131 742
§ 4136 1109
§ 4205 1110
§ 4226 910
§ 4613 710
§ 4625 .....716, 1093
§ 4756 723
§ 4972 1115
§§ 5006, 5007 968
§ 5276 1115
§ 5299 1095
§ 5360 710
§ 5373 714
§ 5373. Amended by Laws 1900, p. 95, ch. 135....1115
§ 5484 1115

McCLAIN'S CODE.

§ 3447 739
§§ 3646, 4712 725

LAWS.

1900, p. 6, ch. 10.....1100
1900, p. 95, ch. 135.....1115

MICHIGAN.

CONSTITUTION.

Art. 4, § 21..... 508

COMPILED LAWS 1897.

§ 463 1060
§ 550. Amended by Laws 1899, p. 380. No. 243..1060
§ 1098 442
§ 1101 22
§ 2112 795
§§ 3196, 3295..... 450
§§ 3959, 3960..... 928
§§ 3959, 3960. Amended by Laws 1899, p. 318, No. 204 933
§§ 4051–4056, 4131..... 497
§§ 4320, 4323, 4325, 4345, 4346 452
§ 4665, subd. 12..... 506
§ 4812 18
§ 4857 584
§ 5075 483
§§ 5754, 5755 14
§§ 6101, 6153, 8553 438
§ 8706 950
§§ 8796, 8797 510
§ 9322, subd. 2 478
§ 9334 573
§ 9515 449
§ 9516 20
§ 9739 445
§ 10,025 934
§§ 10,117, 10,427, 10,428.. 569
§§ 10,714, 10,715..... 504
§ 10,909 442
§ 11,306 928
§§ 11,312, 11,881, 11,882.. 936
§ 11,887 442
§ 11,947 1061

HOWELL'S ANNOTATED STATUTES.

§ 619 15

LAWS.

1859, p. 310, No. 117..... 508
1865, p. 693, No. 338.... 508
1869, p. 164, No. 97..... 508
1887, p. 225, No. 205. Repealed by Comp. Laws 1897, §§ 6101, 6153..... 438
1887, p. 477, No. 18..... 508
1889, p. 65, No. 62..... 497
1893, pp. 377, 380, 392, §§ 53, 58, 74, No. 206..... 928
1893, p. 394, No. 206, § 84. Amended by Laws 1899, p. 431, No. 262..... 933
1893, p. 397, No. 206, § 94 933
1893, p. 399, No. 206, § 99 928
1899, pp. 276, 280, No. 183, §§ 1, 16, 25....927, 928
1899, p. 318, No. 204..... 933
1899, p. 323, No. 207..... 584
1899, p. 380, No. 243....1060
1899, p. 431, No. 262.... 933
1901, p. 37, No. 22, § 1... 26
1901, p. 65, No. 303...

Digitized by Google

MINNESOTA.

CONSTITUTION.

Art. 4, §§ 33, 34..... 916

GENERAL STATUTES 1894.

§ 5204 .....704, 914
§ 5420 915
§ 7189 330

CITY CHARTERS.

St. Paul, 1900, pp. 34, 38, ch. 6, tit. 3, §§ 7, 25.... 737

LAWS.

1885, p. 148, ch. 145..... 40
1891, p. 255, ch. 34..... 41
1899, p. 68, ch. 69..... 919
1899, p. 88, ch. 86.....1128
1899, p. 315, ch. 272..... 86
1901, p. 348, ch. 237..... 704
1901, p. 353, ch. 237, § 20 704
1903, p. 659, ch. 364..... 916

NEBRASKA.

CONSTITUTION..

Art. 6, § 17 228

ANNOTATED CODE 1901.

§§ 29, 416 251

CODE OF CIVIL PROCEDURE.

§ 20 118
§ 225 519
§ 329 .....52, 409
§ 414 173
§ 533 60
§§ 588, 590 183
§ 602 .....238, 401
§ 847 590
§ 847. Repealed by Laws 1897, p. 378, ch. 95.... 612
§ 850 140

CODE OF CRIMINAL PROCEDURE.

§ 217 196

COMPILED STATUTES 1897.

Ch. 13a, § 36..... 484

COMPILED STATUTES 1901.

Page 380, ch. 16, § 37.... 148
Page 433, ch. 16, § 215... 613
Ch. 2, art. 3.....1037
Ch. 8, § 35 618
Ch. 12a, § 146..... 603
Ch. 13a, art. 1, § 110..... 273
Ch. 18, art. 1, §§ 43, 44.. 673
Ch. 25, § 22..... 489
Ch. 45, § 14..... 668
Ch. 50, § 3..... 225
Ch. 73, § 13..... 643
Ch. 77, art. 1, § 131..... 55
Ch. 77, art. 1, § 138..... 603
Ch. 77, art. 1, § 142..... 344

LAWS.

1897, p. 378, ch. 95..... 612
1901, p. 484, ch. 85..... 163, 228, 487

NORTH DAKOTA.

CONSTITUTION.

§ 162 310
§§ 182, 187 311

COMPILED LAWS.

§ 1417 298

REVISED CODES 1895.

§ 2183 358

REVISED CODES 1899.

§ 1474 292
§ 2978 324
§ 5221 258
§ 5234 844
§§ 5575, 5580 326
§ 5630 .....258, 844
§§ 5700, 5739 844
§ 6771a 297
§ 7002 258
§§ 7406, 8082.....1025

LAWS.

1887, p. 151, ch. 50..... 298
1889, p. 164, ch. 119..... 298
1897, p. 256, ch. 126..... 844
1897, p. 256, ch. 126, § 81 294
1901, p. 9, ch. 5.....1029
1903, p. 54, ch. 49..... 310

SOUTH DAKOTA.

CONSTITUTION.

Art. 8, §§ 5, 6..... 699

CODE OF CIVIL PROCEDURE.

§ 303, subds. 2-4..... 103

REVISED CODE OF CIVIL PROCEDURE 1903.

§ 336 699

POLITICAL CODE.

§ 1609 92
§ 1818 702

REVISED POLITICAL CODE 1903.

§ 2225 94
§§ 2764, 2810, 2812..... 6[illegible]

COMPILED LAWS 1887.

§§ 959-999 ..... 12[illegible]
§ 1643. Amended by Laws 1893, p. 273, ch. 160... 94
§§ 4892, 4904..... 12[illegible]
§§ 5151, 5152..... 9[illegible]

LAWS.

1890, pp. 98, 99, art. 16, §§ 32, 34..... 12[illegible]
1890, p. 296, ch. 136..... 6[illegible]
1891, p. 68, ch. 14, § 121.. 1[illegible]
1893, p. 273, ch. 160..... 94

WISCONSIN.

CONSTITUTION.

Art. 1, § 16..... 8[illegible]
Art. 1, §§ 18, 19..... 79[illegible]

REVISED STATUTES 1898.

§ 554 921
§ 585 418
§ 748 ..... 3[illegible]
§ 986 817
§ 1038, subd. 14..... 68[illegible]
§§ 1074, 1076, 1079, 1080, 1081, 1116 921
§ 1189a. Amended by Laws 1899, p. 652, ch. 351, § 21 ..... 5[illegible]
§ 1273 ..... 5[illegible]
§§ 1700, 1701..... 8[illegible]
§ 1778 545
§§ 1809, 1809a ..... 4[illegible]
§ 1846 ..... 54[illegible]
§ 1955c. Amended by Laws 1899, p. 138, ch. 101... 9[illegible]
§§ 2033-2035 ..... 3[illegible]
§§ 2037, 2057 .....367, 3[illegible]
§ 2611a ..... 7[illegible]
§ 2771 ..... 5[illegible]
§ 2831 ..... 8[illegible]
§ 2832 .....796, 8[illegible]
§ 2858 ..... 8[illegible]
§§ 2920, 2931, 2932..... 8[illegible]
§ 2983 ..... 4[illegible]
§ 3071 ..... 5[illegible]
§ 3221 ..... 3[illegible]
§ 3795 ..... 4[illegible]
§ 3844 ..... 7[illegible]
§ 3862 ..... 4[illegible]
§ 4033 ..... 8[illegible]
§ 4222 ..... 8[illegible]
§ 4791 ..... 8[illegible]
§ 4971 921

LAWS.

1891, p. 824, ch. 124, § 111 921
1899, p. 138, ch. 101..... 9[illegible]
1899, p. 406, ch. 244..... 5[illegible]
1899, p. 446, ch. 265, § 8.. 8[illegible]
1899, p. 652, ch. 351, § 21 5[illegible]
1901, p. 477, ch. 341..... 549

STENOGRAPHERS.

Fees of, as costs, see "Costs," § 3.
Incorporation of report of, in record on appeal, see "Appeal and Error," § 14.

STIPULATIONS.

As to damages, see "Damages," § 2.

Where defendant stipulates that a fact exists, he cannot secure reversal because of the defective pleading of the stipulated facts.—Bennett v. Bennett (Neb.) 994.

In a suit to compel the state to issue patents of school lands to plaintiff, the state *held* estopped by a stipulation of counsel from asserting that judgment against it would leave it unprotected as against the original purchaser.—Brooke v. Eastman (S. D.) 699.

STOCK.

Corporate stock, see "Corporations," § 3.

STOCKHOLDERS.

Of corporations, see "Corporations," § 4.

Digitized by Google

liability of mortgagee for taxes, see "Mortgages," § 3.

Statutes imposing tax on buildings used in manufacture or sale of cigarettes, as taking property without due process of law, see "Constitutional Law," § 6.

Statutes making agent holding securities personally liable for taxes thereon as denial of equal protection of laws, see "Constitutional Law," § 5.

Statutes making agent holding securities personally liable for taxes thereon as taking property without due process of law, see "Constitutional Law," § 6.

Local or special taxes.

See "Municipal Corporations," § 13; "Schools and School Districts," § 1; "Towns," § 1.

Assessments for municipal improvements, see "Municipal Corporations," §§ 8, 9.

Occupation or privilege taxes.

See "Intoxicating Liquors," § 1.

§ 1. Liability of persons and property.

Pension money paid to the guardian of an insane pensioner, and by him loaned, is in process of transmission to the pensioner, and still under control of the federal government (Rev. St. U. S. §§ 4766, 4783 [U. S. Comp. St. 1901, pp. 3286, 3297]; Rev. St. U. S. § 5486, as amended by Act Feb. 10, 1891, c. 130, 26 Stat. 746 [U. S. Comp. St. 1901, p. 3703]; Act June 30, 1890, c. 639, § 1, 26 Stat. 187; Act March 2, 1895, c. 193, § 1, 28 Stat. 964 [U. S. Comp. St. 1901, p. 3757]), and so is exempt from taxation as a pension, under Code, § 1309, and Rev. St. U. S. § 4747 [U. S. Comp. St. 1901, p. 3279].—Manning v. Spry (Iowa) 873.

A company in possession of notes and mortgages owned by others *held* an agent, within Code, § 1320, relating to taxation of property in the possession of an agent.—German Trust Co. v. Board of Equalization (Iowa) 878; Same v. City of Davenport, Id.

Under Code, § 1320, certain securities, partially owned by a nonresident, but in the possession and control of a resident agent, *held* taxable to the latter.—Heinz v. Board of Equalization of City of Davenport (Iowa) 967.

Under Rev. St. 1898, § 1038, subd. 14, where a street railway company has leased realty for its business, the exemption does not affect merely the leasehold interest and subject the other interest to taxation.—Merrill Ry. & Lighting Co. v. City of Merrill (Wis.) 686.

Under Rev. St. 1898, § 1038, subd. 14, real property leased by a street railway company, which has paid the license taxes for five years, and has been used by it in its business, is exempt from general taxation.—Merrill Ry. & Lighting Co. v. City of Merrill (Wis.) 686.

§ 2. Levy and assessment.

Agreement by county to employ person to ferret out unassessed property for 50 per cent. compensation *held* not unreasonable.—Reed v. Cunningham (Iowa) 1119.

A party cannot be heard to complain that an order raised the assessed value of his property for taxation too high, when the valuation so made is less than one-seventh of the actual value of the property.—Lexington Mill & Elevator Co. v. Dawson County (Neb.) 62.

A complaint filed with the board of equalization *held* a sufficient statement of facts to warrant an investigation as to the assessments of the objectors, and to sufficiently charge that the assessments of the other persons are too low.—Lexington Mill & Elevator Co. v. Dawson County (Neb.) 62.

void.—Hertzler v. Cass County (N. D.) 294.

The provisions of Laws 1897, p. 256, c. 126, requiring real estate to be assessed for taxation in the name of the owner, are directory.—Hertzler v. Cass County (N. D.) 294.

State tax levies, which were made by fixing a percentage of the aggregate value of the property in the state, as equalized, were in legal effect levies of a specific sum.—Sykes v. Beck (N. D.) 844.

Provisions of Laws 1897, p. 256, c. 126, so far as they require an assessment of real estate to be made in the name of the owner, are directory only.—Sykes v. Beck (N. D.) 844.

Under Comp. Laws 1887, § 1643, as amended by Laws 1893, c. 160, p. 273 (Rev. Pol. Code, § 2225), in an action against a county to invalidate the tax proceedings for a particular year, so far as they relate to the land described in the complaint, the county *held* entitled to recover judgment for the just amount of the taxes on the land unpaid.—Pettigrew v. Moody County (S. D.) 94.

Plaintiff in an action to invalidate the tax proceedings for a particular year, so far as they relate to the land described in the complaint, need not tender to the county the amount of taxes justly recoverable.—Pettigrew v. Moody County (S. D.) 94.

§ 3. Lien and priority.

Under Comp. St. 1901, c. 77, art. 1, § 13, and chapter 12a, § 146, taxes legally levied are a perpetual superior lien on the real estate taxed.—Mutual Ben. Life Ins. Co. v. Sichen (Neb.) 603.

A tax imposed on real estate under Laws 1897, p. 256, c. 126, does not create a personal obligation against the owner, but is merely a charge against the land.—Hertzler v. Cass County (N. D.) 294.

§ 4. Payment and refunding or recovery of tax paid.

A company which has in its possession property of another, and which pays the taxes thereon pursuant to Code, § 1320, *held* entitled to a lien on the property for the taxes paid.—German Trust Co. v. Board of Equalization (Iowa) 878; Same v. City of Davenport, Id.

Where a tender of the amount of a legal tax is rejected, and is kept good, no recovery can be had for interest after the tender.—Clark v. Colfax County (Neb.) 607.

Where a tax is levied in excess of the legal limit, a taxpayer may tender the amount assessed, less such excess.—Clark v. Colfax County (Neb.) 607.

§ 5. Sale of land for nonpayment of tax.

Posting notice of tax sale on a bulletin board at the courthouse door, instead of on the door, *held*, at most, within Code 1873, § 880, providing that no irregularity or informality in the advertisement shall invalidate the sale.—Hoskins v. Iowa Land Co. (Iowa) 977.

The requirement that notice of tax sale be posted on the "courthouse door" is satisfied by posting on a bulletin board at the door.—Hoskins v. Iowa Land Co. (Iowa) 977.

Sale of several parcels of land in bulk for taxes *held* not invalid, under Tax Laws, § 53 (Acts 1893, No. 206).—Kennedy v. Auditor General (Mich.) 928.

A tax certificate *held* presumptive evidence of the regularity of all proceedings.—Alling v. Woodard (Neb.) 127.

In foreclosure of tax lien by the assignee thereof, in computing the amount due, it is er-

Digitized by Google

for to include taxes paid by the assignor after the assignment.—Alling v. Woodard (Neb.) 127.

In an action to foreclose an alleged tax lien, where the tax certificate was ruled out, and there was no other evidence of the regularity of the proceedings, the judgment refusing to foreclose the lien was proper.—Pettibone v. Yeiser (Neb.) 193.

Designation in a tax sale certificate *held* sufficient, under Comp. St. 1901, c. 77, art. 1, § 142, to create a lien as against him.—Merrill v. Van Camp. (Neb.) 344.

On foreclosure of tax liens, unless the decree provides otherwise, the tracts must be appraised and sold separately.—Roher v. Fassler (Neb.) 523.

A tax sale made under the law of 1890 for a tax levied in 1889 constituted a contract, the terms of which are expressed in the law in force when the sale was made.—Fisher v. Betts (N. D.) 132.

Revenue law passed in 1890, providing for the sale of land for nonpayment of taxes, and for certificate and deed to the purchaser, and Laws 1891, providing for deeds under sales under the law of 1890, should be construed together.—Fisher v. Betts (N. D.) 132.

The fees legally chargeable on tax sales made in 1889, under section 1417 of the Compiled Laws (Dak.), considered, and a sale *held* not made for an excessive amount. — Nichols v. Roberts (N. D.) 298.

Under Comp. Laws Dak. § 1417, authorizing a treasurer to charge 5 per cent. commission on the sale of land for delinquent taxes, a sale is not made for an excessive amount which includes such commissions therein.—Nichols v. Roberts (N. D.) 298.

Laws 1887, p. 151, c. 50, did not repeal that portion of Comp. Laws Dak. § 1417, giving treasurers 5 per cent. commission on the sale of lands for delinquent taxes.—Nichols v. Roberts (N. D.) 298.

§ 6. Redemption from tax sale.

A purchase of an outstanding tax title by the purchaser of land under a junior judgment will be treated in equity as a redemption of the land as against the senior judgment creditor.—Lane v. Wright (Iowa) 902.

It is enough that the affidavit making proof of service by advertisement of notices to redeem from tax sale refer to or have attached the printed notice.—Hoskins v. Iowa Land Co. (Iowa) 977.

Under Tax Law, §§ 140, 141 (Comp. Laws 1897, §§ 3959, 3960, as amended by Pub. Acts 1899, p. 318, No. 204), an owner of land bid off by the state at tax sale and subsequently sold to a private individual *held* not entitled to a reconveyance without paying the amount paid by the purchaser from the state to free the land from tax lien for a year subsequent to that for which the sale was made.—Cheever v. Flint Land Co. (Mich.) 933.

Under Tax Law, §§ 140, 141 (Comp. Laws 1897, §§ 3959, 3960, as amended by Pub. Acts 1899, p. 318, No. 204), the owner of land bid off by the state at tax sale, and subsequently sold, *held* required to pay the purchaser from the state an amount paid by such purchaser to free the land from tax lien for a year subsequent to that for the taxes of which the sale to the state was made.—Cheever v. Flint Land Co. (Mich.) 933.

§ 7. Tax titles.

Under Tax Law, § 84 (Comp. Laws 1897, § 3907, as amended by Pub. Acts, 1899, p. 431, No. 262), purchaser of land bid off by the state at tax sale *held* required to pay taxes for a year subsequent to that for the taxes of which the sale to the state was made, though the land had also been sc taxes.—Cheever v. Flin

Decree holding defen amount of tax liens h sustain it.—Hillers v. Y

That a state board of 1892 levied taxes by pe required a levy in specif der such tax sale invali tax deed issued on a s based on such levy.—F 132.

Where by the revenue auditor was authorized sales, and in 1895 deed issued by county treasu did not repeal the prior should issue deeds, and an auditor after the la was not void on its fa D.) 132.

That a tax deed was r showing that notice of r lished is not ground fo the auditor is presumed duty.—Fisher v. Betts (

Evidence considered, show that certain tax d were invalid.—Fisher v

Under a statute ma facie evidence of the re ceedings, the deed is p redemption notice wa Betts (N. D.) 132.

Where a sale was ma 1890 for a tax levied in islation could repeal th sale was made, so as t dence.—Fisher v. Betts

A person attacking t tax sales has the bur Beck (N. D.) 844.

In an action to deter der Laws 1901, p. 9, c the complaint need not was based on a regula taxes.—Blakemore v. I

In an action to rec evidence that the land pied *held* inadmissible, and answer admitted Dunbar v. Lindsay (W

Rev. St. 1898, § 118 1899, p. 652, c. 351, tion for actions to rec *held* not to apply whe deemed the land from recording of the dee (Wis.) 557.

A tax deed *held* void state the name of th sale.—Dunbar v. Lind

§ 8. Forfeitures a

Under Laws 1889, p. penalty is to be adde tax, with accrued inte —Nichols v. Roberts (

Laws 1889, p. 164, after June 1st at 1 p computed on the sum and interest unpaid c date of sale.—Nichols

§ 9. Legacy, inhe taxes.

Under Code, §§ 14 devised property to hi vious to testator, lea and sister of the test to such brother and s

Digitized by Google

(Iowa) 952; State v. Kiler, Id.

§ 10. Disposition of taxes collected, and failure of local authorities to collect.

The tax which, under Rev. St. 1898, § 1074, the county board directs to be raised in each taxing district for school purposes therein, is not to be paid to the county treasurer under sections 1076, 1080, 1081, 1116.—State v. Hunter (Wis.) 921.

Under Laws 1891, p. 824, c. 124, § 111, *held*, that a city treasurer must set aside the amount levied by the county board for school purposes in the city, though all such school tax is not collected.—State v. Hunter (Wis.) 921.

TAXATION OF COSTS.

See "Costs," § 4.

TEACHERS.

See "Schools and School Districts," § 1.

TELEGRAPHS AND TELEPHONES.

§ 1. Establishment, construction, and maintenance.

In an action for injuries from the sagging of a telephone wire, the question of defendant's negligence and plaintiff's contributory negligence *held* for the jury.—Friesenhan v. Michigan Telephone Co. (Mich.) 501.

Rev. St. 1898, § 1778, *held* not to render a telegraph company liable for failure to promptly deliver messages, for damages other than those proximately flowing from its default.—Fisher v. Western Union Tel. Co. (Wis.) 545.

§ 2. Regulation and operation.

In an action against a telegraph company for delay in delivering a message refusing to make a proposed contract, damages suffered by the addressees by reason of their failure to make another contract on the sender's terms *held* not the proximate result of the telegraph company's default.—Fisher v. Western Union Tel. Co. (Wis.) 545.

TENDER.

Effect on interest, see "Interest," § 3.
Of price of land sold, see "Vendor and Purchaser," § 3.
Of tax, see "Taxation," §§ 2, 4.

Where a tender is accompanied by a condition, and the party rejects the tender on the ground that it is insufficient, the condition does not vitiate the tender.—Clark v. Colfax County (Neb.) 607.

TERMS.

Of leases, see "Landlord and Tenant," § 2.
Of office of judges, see "Judges," § 1.

TESTAMENT.

See "Wills."

TESTAMENTARY CAPACITY.

See "Wills," § 1.

TESTAMENTARY GUARDIANS.

See "Guardian and Ward," § 1.

THEFT.

See "Larceny."

TIMBER.

See "Logs and Logging."

TIME.

For application for new trial, see "New Trial," § 3.
For performance of contract, see "Contracts," § 2.
For presentation of claims against estate of decedent, see "Executors and Administrators," § 4.
For redemption from sale on execution, see "Execution," § 4.
For rescission of contract, see "Contracts," § 3.
For settling statement of case on appeal, see "Appeal and Error," § 13.

TITLE.

Color of title, see "Adverse Possession."
Necessary to maintain ejectment, see "Ejectment," § 1.
Of ordinances, see "Municipal Corporations," § 3.
Of statutes, see "Statutes," § 2.
Registration of, see "Records."
Removal of cloud, see "Quieting Title."
Retention of apparent title by grantor, see "Fraudulent Conveyances," § 1.
Tax titles, see "Taxation," § 7.
Title of lessor, see "Landlord and Tenant," § 1.
To minerals, see "Mines and Minerals," § 1.

TOOLS.

Liability of employer for defects, see "Master and Servant," § 3.

TORRENS ACT.

See "Records."

TORTS.

Causing death, see "Death," § 1.

By particular classes of parties.

See "Municipal Corporations," § 12.
Agents, see "Principal and Agent," § 2.

Particular remedies for torts.

See "Trover and Conversion," § 2.

Particular torts.

See "Assault and Battery," § 1; "Conspiracy," § 1; "False Imprisonment," § 1; "Forcible Entry and Detainer"; "Fraud"; "Libel and Slander"; "Malicious Prosecution"; "Negligence"; "Trover and Conversion."

TOWNS.

See "Counties"; "Municipal Corporations"; "Schools and School Districts," § 1.

§ 1. Fiscal management, public debt, securities, and taxation.

Act 1903, authorizing a township board to issue bonds for street improvement, *held* not unconstitutional as an invasion of the right of local self-government.—Grosse Pointe Tp. v. Finn (Mich.) 1078.

Authority conferred on a township board to issue bonds, sell them, and pay the proceeds to the township treasurer, *held* to imply the power to pledge the credit of the township.—Grosse Pointe Tp. v. Finn (Mich.) 1078.

Digitized by Google

TRADE-MARKS AND TRADE-NAMES.

§ 1. Infringement and unfair competition.

Where a manufacturer of a preparation according to a secret formula is guilty of false representations in any material respect in connection therewith, or if his trade-mark contain false assertions, he has no standing in a court of equity to enjoin misuse of his trade-mark.—Newbro v. Undeland (Neb.) 635.

Mere statements of opinion as to the curative properties of a compound, or as to the cause of a disease concerning which there is a conflict of opinion, are not false representations, within the rule that one deceiving the public by false representations cannot enforce his trade-mark.—Newbro v. Undeland (Neb.) 635.

TRADE SECRETS.

Restraining disclosure, see "Injunction," § 2.

TRANSCRIPTS.

Of record for purpose of review, see "Appeal and Error," § 13; "Criminal Law," § 18.

TRANSFER TAX.

See "Taxation," § 9.

TREES.

See "Logs and Logging."

TRESPASS.

Admissions as evidence, see "Evidence," § 5.
On mining property, see "Mines and Minerals," § 1.
To the person, see "Assault and Battery," § 1; "False Imprisonment."

TRESPASS TO TRY TITLE.

See "Ejectment."

TRIAL.

See "New Trial"; "Reference"; "Witnesses."
Contributory negligence of passenger as question for jury, see "Carriers," § 2.
Exceptions to rulings in instructions, for purpose of review, see "Appeal and Error," § 7.
Findings as to limitations, see "Limitation of Actions," § 2.
Harmless error in instructions, see "Appeal and Error," § 29; "Criminal Law," § 18; "Homicide," § 4.
Instructions as to adverse possession, see "Adverse Possession," § 2.
Instructions as to damages, see "Damages," § 5.
Legality of contract as question for jury, see "Contracts," § 1.
Necessity of motion for new trial for purpose of review, see "Appeal and Error," § 8.
Necessity of preservation of instructions in bill of exceptions for purpose of review, see "Appeal and Error," § 16.
Presumptions on appeal or writ of error, see "Appeal and Error," § 26.
Review of discretion of court in conduct of trial, see "Appeal and Error," § 27.

Proceedings incident to trials.

See "Continuance."
Entry of judgment after trial of issues, see "Judgment," § 3.
See "False Imprisonment," § 1; "Fraud," § 2; "Malicious Prosecution," § 3; "Negligence," § 3; "Replevin," § 3; "Work and Labor."
Against partner, see "Partnership," § 2.
Disputed claims against estate of decedent, see "Executors and Administrators," § 4.
For breach of contract, see "Contracts," § 5; "Sales," § 7.
For conversion of mortgaged goods, see "Chattel Mortgages," § 5.
Foreclosure, see "Mechanics' Liens," § 3; "Mortgages," § 7.
For injuries to animals caused by operation of railroad, see "Railroads," § 6.
For personal injuries, see "Carriers," § 2; "Master and Servant," § 6; "Municipal Corporations," § 12; "Railroads," §§ 4–7; "Street Railroads," § 2; "Telegraphs and Telephones," § 1.
For price of goods sold, see "Sales," § 7.
For recovery of insurance premiums paid, see "Insurance," § 4.
For rent, see "Landlord and Tenant," § 4.
For unlawful entry by landlord, see "Landlord and Tenant," § 5.
For wages of master of vessel, see "Shipping," § 1.
On account stated, see "Account Stated."
On insurance policy, see "Insurance," §§ 10, 11.
Probate proceedings, see "Wills," § 4.
Suits to try tax titles, see "Taxation," § 7.
To recover possession of mortgaged goods, see "Chattel Mortgages," § 3.
To recover price paid for horse at auction, see "Auctions and Auctioneers."

Trial of criminal prosecutions.

See "Bribery"; "Burglary," § 1; "Criminal Law," §§ 10–18; "Homicide," § 2; "Larceny," § 1; "Rape," § 1; "Seduction," § 1.

§ 1. Course and conduct of trial in general.

Where a witness on the stand is wantonly attacked by the attorney of the opposite party without any provocation, the act of the judge in reproving such attorney is proper.—Heffernan v. O'Neill (Neb.) 244.

§ 2. Réception of evidence.

A motion to strike out the entire testimony of plaintiff *held* properly denied, where a portion thereof was not objectionable.—Witzel v. Zuel (Minn.) 1124.

An objection to a question is to be judged by the question itself and its relation to the then state of the case.—Schmuck v. Hill (Neb.) 158.

Where, before trial, an order is entered excluding all witnesses, and one in ignorance of the order enters the court room, it is error to refuse to allow him to testify, where neither the party nor his attorneys are privy to his violation of the rule.—Clemmons v. Clemmons (Neb.) 404.

Where plaintiff's evidence fails to make a prima facie case, and defendant supplies facts which would make out a case for plaintiff, it is not error to permit plaintiff to rebut a showing of fraud made in defendant's testimony.—Crockett v. Miller (Neb.) 491.

It is not error to strike out an irresponsive answer on cross-examination.—Arabian Horse Co. v. Bivens (Neb.) 621.

§ 3. Arguments and conduct of counsel.

A remark by plaintiff's counsel in his argument that the jury need not worry much about the verdict against defendant *held* not objectionable, in the absence of evidence showing harmful application.—Burgess v. Stowe (Mich.) 29.

Irrelevant remarks of counsel, calculated if not designed, to prejudice the jury on the merits, are improper.—Ward v. Reed (Mich.) 438.

Digitized by Google

The remarks of counsel in his argument that the witnesses were "cattle" *held*, in view of the remarks of the court, counsel, and associate, not prejudicial error.—Leslie v. Jackson & S. Traction Co. (Mich.) 580.

Where plaintiff's attorney made improper statement, and was reproved by the court, who instructed the jury to disregard the same, the impropriety of counsel was not, as a matter of law, cause for a new trial.—Witzel v. Zuel (Minn.) 1124.

It is not error to permit counsel to read as a part of his argument a version of the evidence prepared by himself.—Stull v. Stull (Neb.) 196.

Where counsel in their argument depart from the record, a prompt rebuke from the judge will ordinarily cure the error.—Brown v. Silver (Neb.) 281.

In an action for assault on a female, misconduct of plaintiff's counsel in asking defendant on cross-examination concerning other assaults alleged to have been made by defendant on other women, which counsel had no expectation of being able to prove, *held* prejudicial error.—Barton v. Bruley (Wis.) 815.

§ 4. Taking case or question from jury.

Where the evidence on an issue of fact is conflicting, the question is for the jury.—Wilkins v. City of Missouri Valley (Iowa) 868.

Where there is no evidence of a fraudulent alteration of a contract after its execution, it is error to submit that question to the jury.—Holdrege v. Watson (Neb.) 67.

Where only one conclusion can be drawn from the evidence, the court should direct a verdict.—Chesley v. Rocheford & Gould (Neb.) 241.

Where, in a case tried to a jury, there is no conflict, it is proper to direct a verdict.—Linton v. Baker (Neb.) 251.

Where the evidence offered is insufficient in law to make out the case, it is the duty of the court to so instruct the jury.—Hill v. Pitt (Neb.) 339.

It is not error to direct a verdict, where there is not sufficient evidence to sustain a verdict for the adversary party.—Chaffee v. Park Falls Lumber Co. (Neb.) 495.

It is proper to direct a verdict where there is no evidence which will warrant a verdict for the party producing it.—Lynch v. Englehardt-Winning-Davison Mercantile Co. (Neb.) 524.

Where a material fact is conclusively established by the evidence, it is not error to refuse to submit such fact to the jury.—Jessen v. Donahue (Neb.) 639.

Frequently the necessary inference from an undisputed state of facts is so certain that it becomes a question of law.—Sovereign Camp Woodmen of the World v. Hruby (Neb.) 998.

A motion by both parties for the direction of a verdict is not a waiver of a decision by the jury on questions of fact, requiring the court to decide the facts.—National Cash Register Co. v. Bonneville (Wis.) 558.

A nonsuit should not be granted, in an action based on negligence, at the close of plaintiff's case, if any reasonable probability of defendant's negligence may account for the event by inference from the evidence within plaintiff's control.—Hupfer v. National Distilling Co. (Wis.) 809.

§ 5. Instructions to jury.

It is not error for the court to charge that the jury must answer a special question submitted one way or the other.—Stevens v. Beardsley (Mich.) 571.

An instruction pointing out the legal consequence of certain facts of which there is evidence is not erroneous, if the jury find them to be established.—Schmuck v. Hill (Neb.) 158.

Where certain written documents pertinent to the issue have been identified and received in evidence, it is not error to instruct the jury to consider them, because they are important evidence on one of the matters in dispute.—Stull v. Stull (Neb.) 196.

The court should state the issues made by the pleadings in its instructions.—Ferris v. Marshall (Neb.) 602.

An exception to an entire instruction cannot be sustained on appeal, if any distinct and independent proposition covered thereby is correct.—Richardson v. Babcock (Wis.) 554.

§ 6. —— Form, requisites, and sufficiency.

An instruction, in action by an employé for personal injuries, that plaintiff must prove all the material allegations of his complaint, *held* misleading.—Williams v. Iowa Cent. Ry. Co. (Iowa) 774.

An instruction which is an accurate statement of law on one phase of a matter in litigation is not erroneous because not coupled with a statement of the law concerning another somewhat related phase of the same matter.—Stull v. Stull (Neb.) 196.

Where an instruction contains nothing prejudicial, it will not be condemned because it is not couched in the best language.—Stull v. Stull (Neb.) 196.

An instruction substantially withdrawing an issue in the case is erroneous.—Russell v. Gunn (Neb.) 341.

Underscoring the words "bona fide" in an instruction is not prejudicial to a party alleging fraud.—Crockett v. Miller (Neb.) 491.

An instruction based on the pleadings, *and* not purporting to state any proposition of law, is not erroneous.—Frieden v. Conkling (Neb.) 615.

The words "effect" and "weight," as used in an instruction relating to evidence, mean precisely the same thing.—Jessen v. Donahue (Neb.) 639.

An instruction *held* not erroneous, because containing the clause, "where witnesses directly contradict each other," as leading the jury to infer that the instruction applied only to such witnesses.—Jessen v. Donahue (Neb.) 639.

An instruction that, if a witness has willfully sworn falsely as to a material issue, the jury may disregard his entire testimony, except as corroborated, is correct.—Richardson v. Babcock (Wis.) 554.

An instruction that a jury is not bound to believe everything a witness testifies to, provided they believe he is mistaken or has willfully falsified as to one matter testified to, *held* misleading.—Richardson v. Babcock (Wis.) 554.

§ 7. —— Applicability to pleadings and evidence.

Refusal of requested instructions embodied in main charge is not error.—Thayer v. Smoky Hollow Coal Co. (Iowa) 718.

Instructions submitting matters concerning which there is no controversy are improper.—Williams v. Iowa Cent. Ry. Co. (Iowa) 774.

Instructions submitting an issue not in any way pleaded are erroneous.—Tower v. McFarland (Neb.) 172.

An instruction without evidence to support it is properly refused.—Huber Mfg. Co. v. Gotchall (Neb.) 611.

§ 8. —— Requests or prayers.

Requested instructions, which are covered by the charge, are properly refused.—Brier v. Davis (Iowa) 983; City of South Omaha v. Taylor (Neb.) 209; Frieden v. Conkling (Neb.) 615.

Digitized by Google

§ 1. Creation, existence, and validity.

Where a legal title has stood unquestioned and undisturbed for many years in the name of a certain person, something more than a slight preponderance of evidence is necessary to establish a trust in some one else.—Malley v. Malley (Iowa) 751.

In suit to quiet title, facts, *held* insufficient to show that title to certain lands had been taken by another in trust for plaintiff.—Malley v. Malley (Iowa) 751.

In a suit between the guardian of an incompetent and an heir of his deceased wife, claiming an interest in lands deeded by the husband to the wife, *held*, that defendant had no equities in the property.—Paulus v. Reed (Iowa) 757.

Where a deed purported to be an absolute conveyance of the land, it could not be converted into an express trust by parol.—Willis v. Robertson (Iowa) 900.

Where a deed recited a consideration in hand paid, neither the grantor's heirs nor his widow could establish a trust by showing that nothing was in fact paid for the land.—Willis v. Robertson (Iowa) 900.

A son's repudiation of his agreement to hold certain real estate, conveyed by his father, for the benefit of his father's grandchildren, *held* not such a fraud as would convert the deed into an instrument creating an express trust.—Willis v. Robertson (Iowa) 900.

That a son to whom real estate was conveyed by the father had acted as his father's agent in other matters *held* not to impose on the son the burden of proving that the deed was absolute, and not in trust for others.—Willis v. Robertson (Iowa) 900.

A deed absolute to grantor's stepfather *held* to create a constructive trust on account of confidential relations.—Newis v. Topfer (Iowa) 905.

Code, § 2918, *held* not to prevent a deed absolute from being declared a trust.—Newis v. Topfer (Iowa) 905.

A conveyance of certain personal property *held* an absolute sale thereof, reserving the income to the grantor for life, and not to create a trust of the same for the benefit of the grantee and her heirs and assigns.—Bloodgood v. Terry (Mich.) 446.

Facts *held* insufficient to create a trust of certain property held by deceased and separated from his other property, and directed to be delivered to the various beneficiaries after his death.—Clay v. Layton (Mich.) 458.

Evidence *held* not to show a resulting trust created in favor of the remaindermen by declaration of tenant by curtesy that he intended to invest money derived from sale of property for the benefit of his children.—Withnell v. Withnell (Neb.) 221.

Where a person obtains the legal title to the land of another by means of fraud, equity will fasten a constructive trust on the property.—Pollard v. McKenney (Neb.) 679.

An express trust in land cannot be created by parol.—Pollard v. McKenney (Neb.) 679.

A purchase of land by an agent for himself *held* to create a trust for the principal, enforcement of which is not prevented by the statute of frauds.—Brookings Land & Trust Co. v. Bertness (S. D.) 97.

§ 2. Appointment, qualification, and tenure of trustee.

Under the provisions of a will, the county court cannot appoint, in case of a vacancy in the office of trustee, a person as a trustee over the protest of a party interested in the estate.—Cole v. City of Watertown (Wis.) 538.

The provision of a will relating to the appointment of trustees to fill vacancies *held* not limited to filling of vacancies caused by the death of, or the refusal to accept the trust by, any of the persons named in the will, but is applicable to the filling of all vacancies.—Cole v. City of Watertown (Wis.) 538.

§ 3. Accounting and compensation of trustee.

In suit for accounting by trustee, evidence examined, and *held* to sustain findings for plaintiff.—Smith v. Schuyler Nat. Bank (Neb.) 1031.

§ 4. Establishment and enforcement of trust.

The five-year limitation provided by Code, § 3447, against an action to have a deed absolute declared a trust *held* not to run from the date of the deed, but from the repudiation of the trust by the trustee.—Newis v. Topfer (Iowa) 905.

A decree declaring a deed absolute a trust may declare a lien therefor on property purchased by the trustee with the proceeds of a sale of the trust property.—Newis v. Topfer (Iowa) 905.

UNDUE INFLUENCE.

Procuring making of deed, see "Deeds," § 1.
Procuring making of will, see "Wills," § 3.

UNITED STATES.

See "Army and Navy."
Courts, see "Courts," § 2.
Public lands, see "Public Lands," § 1.

UNITED STATES COURTS.

Decisions of, as authority in state courts, see "Courts," § 1.

UNIVERSITIES.

See "Colleges and Universities."
Mandamus to officers, see "Mandamus," § 2.

UNLAWFUL DETAINER.

See "Forcible Entry and Detainer."
By tenant, see "Landlord and Tenant," § 5.

USAGES.

See "Customs and Usages."

USURY.

See "Building and Loan Associations."

§ 1. Usurious contracts and transactions.

A plea of usury in a loan made by a building association to defendant's assignor cannot be interposed by defendant.—Bacon v. Iowa Savings & Loan Ass'n (Iowa) 977.

Under Pub. Acts 1899, No. 207, p. 323, and Comp. Laws 1897, § 4857, *held*, that an agreement to pay 5 per cent. interest and all taxes levied against the creditor on account of the debt is not usurious, where the creditor did not know when the contract was made that the taxes would exceed 2 per cent.—Green v. Grant (Mich.) 583.

An allegation in an answer to foreclosure of a mortgage *held* insufficient to charge usury.—Brown v. Forbes (Neb.) 52.

An allegation in answer *held* a sufficient plea of usury.—Hare v. Winterer (Neb.) 179.

The rule that the purchaser of the equity of redemption to the mortgage is estopped to de-

Digitized by Google

VESTED REMAINDERS.

Creation, see "Wills," § 5.

VICE PRINCIPALS.

See "Master and Servant," § 4.

VILLAGES.

See "Municipal Corporations."
Special laws, see "Statutes," § 1.
Subject and title of act incorporating, see "Statutes," § 2.

VOTERS.

See "Elections."

WAGERS.

See "Gaming," § 1.

WAGES.

See "Master and Servant," § 2.
Of master of vessel, see "Shipping," § 1.

WAIVER.

See "Estoppel."

Of objections to particular acts or proceedings.

See "Appearance"; "Equity," § 2; "Pleading," § 8; "Trial," § 13.
Delay in delivery of goods, see "Sales," § 4.
Error waived in appellate court, see "Appeal and Error," § 22.

Of rights or remedies.

See "Insurance," § 7.
Bar of statute of frauds, see "Frauds, Statute of," § 6.
Exemption of homestead, see "Homestead," § 3.
Forfeiture of insurance policy, see "Insurance," § 11.
Forfeiture of lease, see "Landlord and Tenant," § 2.
Right to appeal, see "Appeal and Error," § 4.
Right to new trial, see "New Trial," § 1.
Right to redeem, see "Mortgages," § 13.

WAR.

See "Army and Navy."

WARDS.

See "Guardian and Ward."

WAREHOUSEMEN.

The proprietor of an elevator on the right of way of a railroad company is a licensee, and must operate his elevator subject to the rights of the company to handle its trains.—Chicago, B. & Q. R. Co. v. Giffen (Neb.) 1014.

WARRANTY.

By insured, see "Insurance," §§ 5, 6.
On sale of goods, see "Sales," §§ 6, 8.

WASTE.

Liability of mortgagee for, see "Mortgages," § 6.

WATERS AND WATER COURSES.

See "Navigable Waters."

§ 1. Natural water courses.

A lower riparian owner cannot enjoin an irrigation enterprise by an upper appropriator under the statute because his damages have not been paid.—McCook Irrigation & Water Power Co. v. Crews (Neb.) 996.

It will not be presumed that the damages to an upper riparian owner by appropriation of water by a lower owner are nominal only.—McCook Irrigation & Water Power Co. v. Crews (Neb.) 996.

If a lower appropriator is materially affected by diversions of water by upper riparian owners, he may sue to determine the rights of all the claimants to the water and to quiet his title.—McCook Irrigation & Water Power Co. v. Crews (Neb.) 996.

A lower appropriator of water may not sue to determine the rights of claimants without offering to pay damages accruing to upper owners.—McCook Irrigation & Water Power Co. v. Crews (Neb.) 996.

The right of a riparian owner to the use of the water in a stream for irrigation purposes is measured by the amount of water in the stream, the number of persons who may so use it, and the size, situation, and character of the stream.—McCook Irrigation & Water Power Co. v. Crews (Neb.) 996.

Where a reasonable use of the water in a stream, consistent with a like use by other riparian owners, cannot be made, the injury to a riparian owner by appropriation of the water by an irrigation enterprise is nominal only.—McCook Irrigation & Water Power Co. v. Crews (Neb.) 996.

A riparian owner has a right to a reasonable use of a stream flowing over his land for the purposes of irrigation.—McCook v. Irrigation & Water Power Co. v. Crews (Neb.) 996.

In an action for damages caused by obstructing a water course, evidence *held* sufficient to authorize a finding that the stream was a natural water course.—Blohowak v. Grochoski (Wis.) 551.

§ 2. Subterranean and percolating waters.

A landowner *held* not entitled to waste a supply of percolating waters merely to injure adjoining owners.—Barclay v. Abraham (Iowa) 1080.

A well-defined subterranean stream cannot be diverted to the detriment of an adjoining landowner.—Barclay v. Abraham (Iowa) 1080.

The presumption is that subterranean waters furnishing water supplying wells, are percolating waters, unless the supply is shown to be from a stream of known and defined channel.—Barclay v. Abraham (Iowa) 1080.

§ 3. Natural lakes and ponds.

Rights of riparian owners of a nonnavigable lake, the waters of which have disappeared, determined.—Scheifert v. Briegel (Minn.) 44.

§ 4. Appropriation and prescription.

A lower riparian owner obtains no rights to receive the water of the stream, as against an upper owner, by user for the statutory period of redemption.—Dunn v. Thomas (Neb.) 142.

§ 5. Public water supply.

A city, recognizing plaintiff as owner of the waterworks system in the city, *held* prevented from defeating his right to recover the hydrant rentals by showing that the original contract for the works was made with another.—Marion Water Co. v. City of Marion (Iowa) 883.

No part of the claim of a water company for hydrant rentals *held* barred by limitations.—Marion Water Co. v. City of Marion (Iowa) 883.

WAYS.

Private rights of way, see "Easements."
Public ways, see "Highways"; "Municipal Corporations," §§ 11, 12.

Digitized by Google

WEIGHTS AND MEASURES.

Regulations as to weighing of corn sold within city, see "Municipal Corporations," § 10.

WIDOWS.

Dower, see "Dower."
Rights under statutes of descent and distribution, see "Descent and Distribution," § 2.

WILLS.

See "Descent and Distribution"; "Executors and Administrators."
Charitable bequests and devises, see "Charities."
Construction and execution of trusts, see "Trusts."
Legacy and succession taxes, see "Taxation," § 9.
Specific performance of contract to devise, see "Specific Performance," § 1.

§ 1. Testamentary capacity.

No belief that has any evidence for its basis is in law an insane delusion.—Stull v. Stull (Neb.) 196.

A prima facie showing of mental capacity is not overcome by the proof that the testator was old, feeble in health, and that his mind was not as sound as formerly.—Stull v. Stull (Neb.) 196.

Evidence *held* sufficient to sustain a finding that testator had testamentary capacity at the time of executing his will.—Gavitt v. Moulton (Wis.) 395.

§ 2. Contracts to devise or bequeath.

An agreement to leave property by will is not revocable after performance on the part of the promisee.—Best v. Grolapp (Neb.) 641.

Where there is a valid promise to devise land, equity will impress a trust on the property in the hands of personal representatives or devisees.—Best v. Grolapp (Neb.) 641.

§ 3. Requisites and validity.

Evidence as to the mental and physical condition of testatrix when her will was made is admissible on the issue of undue influence.—Lingle v. Lingle (Iowa) 708.

Evidence of advanced age and physical infirmities is insufficient to warrant a finding of testamentary incapacity.—Lingle v. Lingle (Iowa) 708.

Where certain unambiguous deeds and assignments were executed by decedent to certain persons, to whom he desired the property to go, but such deeds were not delivered in his lifetime, parol evidence was inadmissible to show that decedent intended such instruments to operate as a will.—Clay v. Layton (Mich.) 458.

Evidence examined, and *held* insufficient to show undue influence in the execution of a will.—Stull v. Stull (Neb.) 196.

Undue influence must be proved, and in connection with the will.—Stull v. Stull (Neb.) 196.

Influence to vitiate a will must be such as to amount to coercion, destroying the free agency of the testator.—Stull v. Stull (Neb.) 196.

In the absence of independent proof of undue influence, declarations of testator after the execution of the will are inadmissible.—Davidson v. Davidson (Neb.) 409.

Mere declarations of a testator, after the execution of a will, are not admissible as evidence of undue influence.—Davidson v. Davidson (Neb.) 409.

Where the only issue was as to undue influence, an instruction to find for contestants, if testator made the will or
family, *held* prejudicia
Davidson (Neb.) 409.

In an action to establis
insufficient to show tha
undue influence of the
vitt v. Moulton (Wis.)

§ 4. Probate, establi ment.

Proponent in will cont
good faith, *held* not pro
costs.—Lingle v. Lingle (

Declarations of a testa
dence as to whether a
sufficient to prove its
Miles (Neb.) 151.

It is not error to refu
facts that proponent mig
have exerted undue influ
named as executor and
beneficiary, raised a pres
fluence which the propon
preponderance of evidence
196.

The county court has c
the probate of a will, an
it to probate is conclu
by a direct proceeding.—
(Neb.) 276.

The district court has n
in an action to contest a
probate of the same.—A
(Neb.) 276.

Judgments of a county
ters are entitled to the pre
to other courts of that
Beer v. Plant (Neb.) 348.

The signature of a cou
sential to the validity of
a will to probate.—Beer v

In an action to establish
held sufficient to rebut t
sumption of testator's ani
from the fact that the wi
be in testator's possessio
found after his death.—
(Wis.) 395.

Evidence in a proceeding
held to sustain findings th
executed and that testator
and free from undue in
Kraftczyk (Wis.) 820.

Lapse of time is no ba
probate of a will to establis
—Hanley v. Kraftczyk (Wi

A purchaser of land fro
tled to have the will probat
czyk (Wis.) 820.

Failure of the court to
probate of a will does not
ceedings for probate.—H
(Wis.) 820.

§ 5. Construction.

A will *held* to give a fee.
direction as to the disposi
after the death of the d
Aldinger (Iowa) 781.

A will devising half the
child and the other half t
held not to make her truste
the remainder of the half s
beck v. Pinnell (Iowa) 860.

Where no trust is created
tor, nor the heirs or devis
a legal title, can come into
construction of the will.—A
(Neb.) 276.

The construction of a will
for purposes of administrati

Digitized by Google

of the executor or administrator only, and controversies between adverse claimants under a devise are not affected thereby.—Andersen v. Andersen (Neb.) 276.

Will construed, and *held*, that daughter of testator, after attaining the age of 33, could devise the land in Nebraska to her husband on her dying without issue.—Spencer v. Scovil (Neb.) 1016.

Where testator devises his lands to his daughter in fee simple, a subsequent clause in the will devising over to others so much of the land as his daughter has not alienated, if she dies without issue, is void.—Spencer v. Scovil (Neb.) 1016.

Words of survivorship in respect to a devise of property in remainder to be divided between members of a class, nothing appearing to the contrary, are presumed to refer to the time set for such division.—In re Moran's Will (Wis.) 367.

Will construed, and *held*, that the intermediate period of enjoyment and the indefinite point of time set for distribution after the death of the testator showed an intent to postpone the vesting, in the common-law sense, until the arrival of such time, and to limit the participants to those then in being of the class designated.—In re Moran's Will (Wis.) 367.

A vested remainder, under Rev. St. 1898, § 2057, may be devested on conditions subsequent in whatever way the creator thereof may authorize, though such remainder, under the common law, cannot be devested at all.—In re Moran's Will (Wis.) 367.

A devise to testator's wife for life, and then to his children who may survive, and his sister if she survive his wife, is an estate in expectancy, under Rev. St. 1898, § 2033.—In re Moran's Will (Wis.) 367.

A devise to testator's wife for life, on her death to certain named persons if they survive the wife, created a vested estate, under Rev. St. § 2037.—In re Moran's Will (Wis.) 367.

Where testator devised his property to his wife for life, then to certain named devisees if they survived the wife, the estates acquired were future estates, within Rev. St. 1898, § 2034.—In re Moran's Will (Wis.) 367.

The rule, in construing a will, that the law favors the vesting of estates, in the common-law sense and in the statutory sense, as regards the subject of perpetuities, is not for use except in solving uncertainties.—In re Moran's Will (Wis.) 367.

When an estate is by will carved out of a fee, and the remainder is directed to be divided between the members of a class after the expiration of such particular estate, the presumption of an intent that the estates in remainder shall vest on the death of the testator is displaced by a presumption, nothing appearing in the will to the contrary, that the testator proposed to create contingent remainders in the common-law sense.—In re Moran's Will (Wis.) 367.

When there is a devise to one, remainder over direct to others, nothing appearing in the will to the contrary, the legal presumption is that the testator intended to create a vested estate in remainder in the common-law sense.—In re Moran's Will (Wis.) 367.

Whether an estate in remainder created by will is vested, in the common-law sense, is controlled by the character of the estate actually created, as evidenced by the testamentary intent.—In re Moran's Will (Wis.) 367.

A person may be so conditioned that he would immediately take in remainder, should the precedent estate presently cease, yet may not be so entitled at any future time, and such element of uncertainty under Rev. St. § 2037 gives to the remainder the character of a vested estate for the purpose of the subject covered by the statute.—In re Moran's Will (Wis.) 367.

While at common law an estate in remainder cannot be at the same time both vested and contingent, under Rev. St. 1898, § 2037, an estate may be both vested and contingent.—In re Moran's Will (Wis.) 367.

Vested estate in remainder, under Rev. St. 1898, § 2037, defined.—In re Moran's Will (Wis.) 367.

Vested remainder at common law defined.—In re Moran's Will (Wis.) 367.

Where testator devised his estate to his wife for life, with remainder to certain named persons if they survived the wife, the estates created were conditional, within Rev. St. § 2057.—In re Moran's Will (Wis.) 367.

A testamentary intention is to be determined from the will, and rules of construction, while they aid in discovering that intent, do not control it.—In re Moran's Will (Wis.) 367.

A devise of land described as in section 22 and having certain boundaries will pass land of testator in section 22 having such boundaries, there being no land with such description in section 21, and he having owned no land in that section.—Hanley v. Kraftczyk (Wis.) 820.

§ 6. Rights and liabilities of devisees and legatees.

A devisee may prosecute ejectment for the lands devised during the pendency of probate proceedings.—Beer v. Plant (Neb.) 348.

Where an executrix and residuary legatee gave a bond to pay debts and legacies, an action by a creditor against her *held* not barred by limitation until six years after the giving of such bond.—Pym v. Pym (Wis.) 429.

In an action against the residuary legatee on a claim of testator's son against his estate, evidence of declarations by testator to his wife concerning money belonging to the testator and held by plaintiff *held* inadmissible.—Pym v. Pym (Wis.) 429.

The giving of a bond to pay debts and legacies by an executrix and residuary legatee, as authorized by Rev. St. 1898, § 3795, *held* not to prevent a creditor of the estate from suing to enforce an equitable lien on testator's real estate for payment of his claim.—Pym v. Pym (Wis.) 429.

WITNESSES.

See "Affidavits"; "Depositions"; "Evidence."
Absence as ground for continuance, see "Criminal Law," § 10.
Attendance before grand jury, see "Grand Jury."
Experts, see "Evidence," §§ 10–14.
Fees of, as costs, see "Costs," § 3.
Harmless error in limiting cross-examination, see "Homicide," § 4.
Indorsement of names on indictment, see "Indictment and Information," § 1.
Instructions as to credibility of, see "Criminal Law," § 15.
Opinions, see "Evidence," §§ 10–14.
Separation and exclusion, see "Trial," § 2.
Testamentary guardians, see "Guardian and Ward," § 1.

§ 1. Attendance, production of documents, and compensation.

In criminal contempt proceedings, under Comp. Laws, § 1098, for refusal to bring books before the grand jury, the practice of requiring immediate obedience to the order of the court is not irregular; section 10,909 providing for interrogatories and time to answer relating to attachments to enforce civil remedies.—In re Archer (Mich.) 442.

Digitized by Google

Digitized by Google

Page

Gudgel v. Southerland (90 N. W. 623).... 309

Hamilton v. Finnegan (91 N. W. 1039)... 623
Hausbrandt v. Hofler (90 N. W. 494)..... 103
Hibbets v. Hibbets (90 N. W. 613)..... 177
Hichhorn v. Bradley (90 N. W. 592)..... 130
Hilman v. Brigham (90 N. W. 491)..... 70
Hively v. Webster County (91 N. W. 1041) 672
Holman v. Omaha & C. B. Ry. & Bridge Co. (90 N. W. 833)..... 268
Houghtaling v. Chicago G. W. Ry. Co. (91 N. W. 811)..... 540
Hoyt v. Chicago, M. & St. P. Ry. Co. (90 N. W. 724)..... 296
Hull v. Hull (90 N. W. 496)..... 63
Hull v. Hull (89 N. W. 979)..... 738
Hull's Will, In re (89 N. W. 979)..... 738
Hurley v. Hurley (91 N. W. 895)..... 621

Jarozewski v. Allen (91 N. W. 941)..... 632
Johnson v. School Corp. of Cedar (90 N. W. 713) 319
Jones v. Haines (90 N. W. 518)..... 80

Kagy v. Independent Dist. of West Des Moines (89 N. W. 972)..... 694
Knowlton v. Des Moines Edison Light Co. (90 N. W. 818)..... 451
Krejci v. Chicago & N. W. Ry. Co. (90 N. W. 708)..... 344

Lamb & Sons v. Dobson (90 N. W. 607).. 124
Lindt v. Linder (90 N. W. 596)..... 110
Lowery v. Lowery (89 N. W. 1118)..... 704

McConkie v. District Court of Cedar County (90 N. W. 716)..... 334
McConnell v. Avey (90 N. W. 604)..... 282
McDonald v. McDonald (90 N. W. 603).. 307
Marshall Field Co. v. Oren Ruffcorn Co. (90 N. W. 618)..... 157
Moore v. First Ruthven Circuit M. E. Church (90 N. W. 492)..... 33
Morrison v. Chicago & N. W. Ry. Co. (91 N. W. 793)..... 587
Munns v. Donovan Commission Co. (91 N. W. 789) 516

Okey v. Moyers (91 N. W. 771)..... 514
Old Ladies' Home of Muscatine v. Hoffman (89 N. W. 1066)..... 716
Olive v. Olive (90 N. W. 827)..... 383
Oliver v. Monona County (90 N. W. 510).. 43
Oliver v. Vincent (90 N. W. 510)..... 43
O'Reagan v. Duggan (91 N. W. 909)..... 612

Padelford v. Eagle Grove (91 N. W. 899) 616
Parrott v. Thiel (90 N. W. 745)..... 392
Peacock v. Gleesen (90 N. W. 610)..... 291
Porter v. Welsh (90 N. W. 582)..... 144
Potter v. Brentlinger (91 N. W. 809)..... 536

Page

Purcell v. Chicago & N. W. Ry. Co. (91 N. W. 933) 667

Queal v. Stradley (90 N. W. 588)..... 748

Read v. American Surety Co. (90 N. W. 590) 10
Redley v. Greiner (91 N. W. 1033)..... 67[illegible]
Reed v. Hoyt (90 N. W. 488)..... 91
Reese v. Hogan (91 N. W. 907)..... 6[illegible]
Riddle v. Russell (91 N. W. 810)..... [illegible]
Roberts v. Parker (90 N. W. 744)..... 38[illegible]
Rodgers v. Farmers' Nat. Bank (91 N. W. 773) 511
Rowe v. Rugg (91 N. W. 903)..... 606
Rule v. McGregor (90 N. W. 811)..... 419

Schoonover v. Osborne (90 N. W. 844).... 427
Shehan v. Stuart (90 N. W. 614)..... 20[illegible]
Shoemaker v. Turner (90 N. W. 709)..... 349
Slothower v. McFarland Grain Co. (90 N. W. 620) 213
Spence v. Chicago, R. I. & P. Ry. Co. (90 N. W. 346)..... 1
Spring Garden Ins. Co. v. Lemmon (86 N. W. 35) ..... 69[illegible]
State v. Glucose Sugar Refining Co. (91 N. W. 794) 524
State v. Hanaphy (90 N. W. 601)..... 1[illegible]
State v. Height (91 N. W. 935)..... 6[illegible]
State v. Irvin (91 N. W. 760)..... 49[illegible]
State v. Jameson (90 N. W. 622)..... 31[illegible]
State v. King (91 N. W. 768)..... 48[illegible]
State v. Kuhn (90 N. W. 733)..... 2[illegible]
State v. Maxwell (91 N. W. 772)..... 48[illegible]
State v. Perry (91 N. W. 765)..... 46[illegible]
State v. Prins (91 N. W. 758)..... 5[illegible]
State v. Steupper (91 N. W. 912)..... 5[illegible]
Stolenburg v. Diercks (90 N. W. 525).... [illegible]
Swan v. Harvey (90 N. W. 489)..... [illegible]

Thoma, In re (90 N. W. 581)..... 27[illegible]
Thompson v. Thompson (90 N. W. 493)... [illegible]
Townsend v. Blanchard (90 N. W. 519)... [illegible]
Trotter v. Trotter (90 N. W. 750)..... 417
Trotter's Will, In re (90 N. W. 750)..... 417

Walker v. Walker (91 N. W. 908)..... 609
Wallace v. Homestead Co. (90 N. W. 835) 34[illegible]
Wallin v. Murphy (91 N. W. 930)..... 640
Weitnaur v. Weitnaur (91 N. W. 815).... 578
Welch v. Union Cent. Life Ins. Co. (90 N. W. 828)..... 394
West v. Farmers' Mut. Ins. Co. (90 N. W. 523) 147
Whisler v. Whisler (89 N. W. 1110)..... 712
Whitehouse v. American Surety Co. (90 N. W. 727)..... 328
Whitlock v. Wade (90 N. W. 587)..... 153
Willetts v. Ida County Sav. Bank (90 N. W. 729) 386
Willson v. Morse (91 N. W. 823)..... 581

Digitized by Google

Mich. Rep.	N. W. Rep.		Mich. Rep.	N. W. Rep.		Mich. Rep.	N. W. Rep.		Mich. Rep.	N. W. Rep.		Mich. Rep.	N. W. Rep.		Mich. Rep.	N. W. Rep.	
Pg.	Vol.	Pg.	Pg.	Vol.	Pg.	Pg.	Vol.	Pg	Pg.	Vol.	Pg.	Pg.	Vol.	Pg.	Pg.	Vol.	Pg.
1	87	1040	112	88	400	190	88	625	302	88	627	403	89	54	5[illegible]
4	88	65	117	88	384	193	88	471	303	88	898	407	89	73	5[illegible]
11	87	1041	121	88	404	198	88	465	309	88	888	412	89	47	5[illegible]
15	88	67	126	88	403	203	88	1047	312	88	887	417	89	56	5[illegible]
20	88	71	127	88	390	209	88	473	313	88	896	429	88	1052	5[illegible]
27	87	1035	131	88	394	217	88	475	318	88	874	434	88	1050	5[illegible]
31	87	1029	137	88	386	221	88	621	320	88	874	440	89	42	5[illegible]
35	88	204	141	88	392	233	88	466	324	88	882	444	89	44	5[illegible]
41	88	73	145	88	1103	237	88	627	335	88	876	448	89	51	5[illegible]
48	87	1037	146	88	398	240	88	632	342	88	888	451	89	41	5[illegible]
52	88	69	150	88	397	246	88	695	345	88	879	454	89	38	5[illegible]
57	87	1043	153	88	391	260	88	630	350	88	881	458	89	52	5[illegible]
61	87	1028	154	88	383	264	88	638	354	88	889	464	88	1050	5[illegible]
65	87	1032	156	88	407	269	88	628	364	88	886	466	89	72	5[illegible]
70	87	1044	163	88	396	271	88	636	368	88	873	469	89	332	5[illegible]
74	88	78	164	88	402	275	88	629	370	88	895	475	89	349	5[illegible]
80	88	75	168	88	391	278	88	640	374	88	876	484	89	436	5[illegible]
86	88	206	170	88	392	286	88	635	377	88	894	494	89	443	5[illegible]
93	88	209	172	88	388	291	88	634	381	88	1046	502	89	368	5[illegible]
100	88	77	176	88	397	295	88	1102	385	89	39	507	89	441	5[illegible]
103	88	384	178	88	401	298	88	626	392	89	45	513	89	347	5[illegible]
104	88	405	180	88	389	300	88	631	397	89	49	517	89	329	5[illegible]
110	88	387	182	88	468										

VOL. 129, MICHIGAN REPORTS.

Page

Adams v. Detroit Electric Ry. (88 N. W. 634) 291
Adsit v. Smith (88 N. W. 65) 4
Albrecht v. People's Life & Annuity Ass'n (89 N. W. 44) 444
Aldine Mfg. Co. v. Phillips (88 N. W. 632) 240
Archer v. Laidlaw (88 N. W. 465) 198
Atherton v. Defreeze (88 N. W. 886) 364
Attorney General ex rel. Penney v. Gramlich (89 N. W. 446) 630
Auditor General v. Hoffman (89 N. W. 348) 541
Auditor General v. Sage Land & Improvement Co. (88 N. W. 468) 182

Baars v. Grand Rapids (89 N. W. 328) 572
Baker v. Union Trust Co. (89 N. W. 345) .. 581
Ball v. Hauser (89 N. W. 49) 397
Barr v. Guelph Patent Cask Co. (88 N. W. 640) 278
Beattie v. Detroit (88 N. W. 71) 20
Bellows v. Crane Lumber Co. (89 N. W. 367) 560
Bernard v. Fee's Estate (88 N. W. 1052) .. 429
Bliss v. Macomb Probate Judge (88 N. W. 390) 127
Bliss Furniture Co. v. Norris (87 N. W. 1041) 11
Bowen v. Lansing (88 N. W. 384) 117
Bowman v. Montcalm Circuit Judge (89 N. W. 334) 608
Boydan v. Haberstumpf (88 N. W. 386) ... 137
Brown v. Detroit (89 N. W. 1132) 588
Brown v. Kriser (89 N. W. 51) 448

Cadillac State Bank v. Cadillac Stave & Heading Co. (88 N. W. 67) 15
Cady, People ex rel., v. Ihnken (89 N. W. 72) 466
Cameron Lumber Co. v. Somerville (89 N. W. 346) 552
Carson, Pirie, Scott & Co. v. Fincher (89 N. W. 570) 687
Case v. Detroit (88 N. W. 626) 298
Chicago Bridge & Iron Co. v. West Bay City (87 N. W. 1032) 65
Chicago Bldg. & Mfg. Co. v. Yell (89 N. W. 329) 517
Church v. Calhoun, Circuit Judge (88 N. W. 403) 126
City of Lansing v. Detroit, L. & N. R. Co. (89 N. W. 54) 403

City Sav. Bank of Detr
W. 894) .....
Coe v. Dickerson (87 N.
Cook v. Auditor Genera
Cox, In re (89 N. W. 4

Decker v. Kanous' Esta
De Jonge, People ex re
W. 475) .....
Doty v. Detroit Citizer
N. W. 1050) .....

Edwards v. Foote (88 N
Eikhoff v. Wayne Circu
397) .....
Ellis v. Ballou (88 N. W
Ernst v. Freeman's Est

Fillmore v. Van Horn (
Fish v. Thompson (88 N
Fowles v. Hayden (89 N

Gilmore v. Lichtenberg
Globe & Rutgers Fire I
N. W. 580) .....
Great Hive of the Ladi
for Michigan v. Sup
Ladies of the Macca
(88 N. W. 882) .....
Grove v. Smith (88 N.

Hackett v. Wilson Tra
360) .....
Haines v. Lake Shore
N. W. 349) .....
Hammel v. First Nat.
(88 N. W. 397) .....
Hammond v. Detroit (8
Hammond v. Pullman (
Hewitt Iron Min. Co.
N. W. 365) .....
Hill v. Farmers' Mut.
Manistee, Benzie & N
N. W. 392) .....
Holliday v. Snow (89 N
Holmes v. Holmes (89 N
Hosford v. Gratiot Circu
627) .....
Hughes v. Love (88 N.
H. W. Williams Trans
Cole Transp. Co. (88

Digitized by Google

895) 370
Jahrmatter v. Kline (88 N. W. 383)..... 154
Jeffers v. Sydnam (89 N. W. 42)..... 440
Jones v. Green (88 N. W. 1047)..... 203
Jones v. McMillan (88 N. W. 206)..... 86

Klass v. Detroit (88 N. W. 204)..... 35
Koons v. Vauconsant (88 N. W. 630)..... 260

La Fernier v. Soo River Lighter & Wrecking Co. (89 N. W. 353)..... 596
Lamphere v. Heaton (89 N. W. 1132).... 540
Lansing v. Detroit, L. & N. R. Co. (89 N. W. 54) 403
Lauer v. Palms (89 N. W. 694)..... 671
Laurium v. Mills (89 N. W. 362)..... 536
Lauzon v. Board of Sup'rs of Chippewa County (88 N. W. 628)..... 269
Leach v. Detroit Electric Ry. (88 N. W. 635) 286
Lindsay v. Morse (88 N. W. 881)..... 350
Little, In re (89 N. W. 38)..... 454
Loder v. Reed (88 N. W. 389)..... 180
Lord v. National Protective Society (88 N. W. 876) 335
Lynch Co. v. Wayne Circuit Judge (88 N. W. 387) 110
Lyon v. Clark (88 N. W. 1046)..... 381

McAskill v. Hancock Tp. (88 N. W. 78)... 74
McCaughna v. Owosso & Corunna Electric Co. (89 N. W. 73)..... 407
McGregor v. Grand Trunk Elevator Co. (89 N. W. 332)..... 469
McIntyre v. Detroit Safe Co. (89 N. W. 39) 385
Mahler v. Stott (89 N. W. 340)..... 614
May v. McQuillan (89 N. W. 45)..... 392
Merchant v. Guilds (88 N. W. 391)..... 168
Messenger v. Peter (88 N. W. 209)..... 93
Metz v. People's Sav. Bank (88 N. W. 874) 320
Michels v. International Ins. Co. (89 N. W. 56) 417
Michels v. Prussian Nat. Fire Ins. Co. (89 N. W. 56)..... 417
Michels v. Transatlantic Fire Ins. Co. (89 N. W. 56)..... 417
Michels v. Western Underwriters' Ass'n (89 N. W. 56)..... 417
Michigan Cent. R. Co. v. Bay City (88 N. W. 638) 264
Michigan Mutual Life Ins. Co. v. Hartz (88 N. W. 405)..... 104
Mikolojczak v. North American Chemical Co. (88 N. W. 75)..... 80
Milks v. Milks (88 N. W. 402)..... 164
Miner v. Boynton (89 N. W. 336)..... 584
Monroe v. Lake Shore & M. S. R. Co. (88 N. W. 888)..... 309
Monyhan v. Detroit & S. Plank-Road Co. (89 N. W. 372)..... 549
Moore v. Pear (89 N. W. 347)..... 513
Moross v. Moross (87 N. W. 1035)..... 27

National Wall Paper Co. v. Ames (89 N. W. 1132) 526
Nicholson v. Detroit (88 N. W. 695)..... 246
Norton v. Hayden (88 N. W. 876)..... 374

Ouellette v. Michigan Alkali Co. (89 N. W. 436) 484
Overseer of Highways of Road Dist. No. 4 of St. Ignace Tp. v. Pelton (87 N. W. 1029) 31

Page Woven Wire Fence Co. v. Pool (87 N. W. 1043)..... 57
Peck v. Webb (88 N. W. 888)..... 342
Penney, Attorney General, ex rel., v. Gramlich (89 N. W. 446)..... 630
People v. Beech (89 N. W. 363)..... 622
People v. Henry (88 N. W. 77)..... 100
People v. Robertson (89 N. W. 340)..... 627
People v. Skillman (89 N. W. 330)..... 618
People v. Utley (89 N. W. 349)..... 628
People ex rel. Cady v. Ihnken (89 N. W. 72) 466
People ex rel. De Jonge v. Kamps (88 N. W. 475) 217
People, for Use of Roberts, v. Lappin (88 N. W. 388)..... 172
Poupard v. Judge of Recorder's Court (89 N. W. 577)..... 662

Ramsby v. Bigler (89 N. W. 344)..... 570
Rhode v. Metropolitan Life Ins. Co. (88 N. W. 400) 112
Rice v. Wilson (89 N. W. 336)..... 520
Richard v. Detroit, R., R. & L. O. Ry. (89 N. W. 52)..... 458
Roberts, People for Use of, v. Lappin (88 N. W. 388)..... 172
Rumney v. Detroit & M. Cattle Co. (89 N. W. 573) 644
Russell v. Wheeler (88 N. W. 73)..... 41
Ryan v. Mills (88 N. W. 392)..... 170

Savlan v. Ayer (89 N. W. 359)..... 545
Sax v. Detroit, G. H. & M. R. Co. (89 N. W. 368) 502
Schimpf v. Wayne Circuit Judge (88 N. W. 384) 103
Simmons v. Conklin (88 N. W. 625)..... 190
Simons v. Rood (88 N. W. 879)..... 345
Snyder v. Neal (89 N. W. 588)..... 692
Sparta v. Boorom (89 N. W. 435; 90 N. W. 681) 555
Spaulding v. Steel (88 N. W. 627)..... 237
Stark v. Stark (88 N. W. 391)..... 153
State v. Dickinson (88 N. W. 621)..... 221
State Sav. Bank of Ann Arbor v. Buhl (88 N. W. 471)..... 193
Steadman v. Keets (89 N. W. 555)..... 669
Stearns v. Stearns (89 N. W. 41)..... 451
Stewart v. Bowerman (88 N. W. 396).... 163
Stuart v. Corlette (89 N. W. 342)..... 611
Supreme Court, Order of Patricians, v. Davis (88 N. W. 874)..... 318

Taft v. Kent Circuit Judge (88 N. W. 887) 312
Taylor v. Greene (89 N. W. 343)..... 564
Taylor v. Weeks (88 N. W. 466)..... 233
Third Nat. Bank of New York v. Steel (88 N. W. 1050)..... 434
Thomas E. Lynch Co. v. Wayne Circuit Judge (88 N. W. 387)..... 110

Union Trust Co. v. Conus (88 N. W. 407).. 156
United States Casualty Co. v. Bagley (87 N. W. 1044)..... 70
United States Heater Co. v. Iron Molders' Union of North America (88 N. W. 889). 354

Van Rossum v. Grand Rapids Brewing Co. (89 N. W. 370)..... 530
Vetterly v. McNeal (89 N. W. 441)..... 507
Village of Laurium v. Mills (89 N. W. 362) 536
Village of Sparta v. Boorom (89 N. W. 435; 90 N. W. 681)..... 555

Walker v. Mack (89 N. W. 338)..... 527
Ward v. Oliver (88 N. W. 631)..... 300
Warner v. Auditor General (89 N. W. 591) 648
Waters v. Reed (88 N. W. 394)..... 131
Waters v. Union Trust Co. (89 N. W. 687) 640
Weaver v. Irons (88 N. W. 873)..... 368
Whalen v. Grant (88 N. W. 401)..... 178
Williams Transp. Line v. Darius Cole Transp. Co. (88 N. W. 473)..... 209
Wright v. Elk Rapids Iron Co. (89 N. W. 335) 543

Zibbell v. Grand Rapids (89 N. W. 563)... 659

Digitized by Google

Minn. Rep.	N. W. Rep.		Minn. Rep.	N. W. Rep.		Minn. Rep.	N. W. Rep.		Minn. Rep.	N. W. Rep.		Minn. Rep.	N. W. Rep.		Minn. Rep.	N. W. Rep.	
Pg.	Vol.	Pg.	Pg.	Vol.	Pg.	Pg.	Vol.	Pg.	Pg.	Vol.	Pg.	Pg.	Vol.	Pg.	Pg.	Vol.	Pg.
1	91	14	97	91	304	189	91	485	250	91	1116	316	92	96	[illegible]		
5	91	26	108	91	291	195	91	465	253	91	1108	319	92	223	[illegible]		
7	91	25	117	91	294	197	91	487	260	19	1115	325	92	216	[illegible]		
11	91	33	123	91	428	205	91	756	264	91	1104	345	92	3	[illegible]		
18	91	28	130	91	430	205	92	331	268	91	1111	345	92	1131	[illegible]		
23	91	18	136	91	432	209	91	756	271	92	6	347	92	215	[illegible]		
27	91	22	139	91	434	211	91	1124	277	91	1103	348	92	8	[illegible]		
33	91	27	146	91	300	211	92	93	280	91	1106	353	92	1	[illegible]		
35	91	20	156	91	298	221	91	604	285	91	1113	355	91	1096	[illegible]		
40	91	1	161	91	297	221	91	840	289	91	1105	358	91	1097	[illegible]		
52	91	269	165	91	484	226	91	1125	292	91	1099	362	92	1	[illegible]		
56	91	265	168	91	467	227	91	891	295	91	1101	367	92	326	[illegible]		
59	91	266	172	91	483	230	91	892	297	91	1125	370	92	221	[illegible]		
59	91	1098	175	91	473	234	91	842	298	92	3	375	92	229	[illegible]		
68	91	259	179	91	469	237	91	843	301	91	1100	381	92	328	[illegible]		
81	91	257	183	91	1125	242	91	893	304	91	1112	388	92	230	[illegible]		
85	91	256	184	91	1125	243	91	890	308	92	4	391	92	1130	[illegible]		
88	91	263	185	91	465	246	91	844	312	91	1101	392	92	227	[illegible]		
91	91	271															

VOL. 87, MINNESOTA REPORTS

Page

Applebee v. Perry (91 N. W. 893)..... 242

Beck v. St. Paul (92 N. W. 328)..... 381
Bem-Way-Bin-Ness v. Eshelby (91 N. W. 291) 108
Berry v. Dole (92 N. W. 334)..... 471
Bieber v. St. Paul (91 N. W. 20)..... 35
Birum v. Johnson (92 N. W. 1)..... 362
Bost v. Supreme Council Royal Arcanum (92 N. W. 337)..... 417
Boyer v. Eastern R. Co. (92 N. W. 326)... 367
Brace v. St. Paul City R. Co. (91 N. W. 1099) 292
Brasie v. Minneapolis Brewing Co. (92 N. W. 340) 456

Cabanne v. Graf (92 N. W. 461)..... 510
C. Gotzian & Co. v. Heine (92 N. W. 398) 429
City of Mankato v. Blue Earth County (92 N. W. 405)..... 425
Clark v. Dayton (92 N. W. 327)..... 454
Coleman v. Akers (92 N. W. 408)..... 492
Conroy v. Logue (91 N. W. 1105)..... 289
Cooling v. Madelia Farmers' Warehouse Co. (92 N. W. 225)..... 398
Coxe v. Anoka Waterworks, Electric Light & Power Co. (91 N. W. 265)..... 56
Cram v. Thompson (91 N. W. 483)..... 172

Davidson v. Hanson (91 N. W. 1124; 92 N. W. 93)..... 211
Davies v. Thomas (91 N. W. 1100)..... 301
Diers v. Ward (92 N. W. 402)..... 475
Dwinnell v. Kramer (92 N. W. 227)..... 392
Dwinnell v. Minneapolis Fire & Marine Mutual Ins. Co. (91 N. W. 266, 1098).... 59

Eklund v. Martin (92 N. W. 406)..... 441
Enright v. Theysen (92 N. W. 1130)..... 391
Erickson v. Child (92 N. W. 1130)..... 487

Fajder v. Aitkin (92 N. W. 332, 934)..... 445
Farnsworth v. Commonwealth Title Insurance & Trust Co. (91 N. W. 1125)..... 184
Farnsworth Loan & Realty Co. v. Commonwealth Title Insurance & Trust Co. (91 N. W. 469)..... 179
Ft. Dearborn Nat. Bank of Chicago v. Security Bank of Renville (91 N. W. 257).. 81
Funk v. Lamb (92 N. W. 8)..... 348

Ganser v. Ganser (92 N. W. 1131)..... 345
Glover v. Sage (92 N. W. 471)..... 526
Gotzian & Co. v. Heine (92 N. W. 398)... 429
Grant v. Wagner (91 N. W. 1125)..... 297
Gray v. St. Paul City R. Co. (91 N. W. 1106) 280

Guthier v. Minneapolis
N. W. 1096).....

Hagerty v. Evans (92 N
Halvorsen v. Moon & E
N. W. 28).....
Hanley v. Board of Co
ty (91 N. W. 756)...
Hanlon v. Hennessy (92
Hanson v. Diamond Ir
W. 447) .....
Hanson v. Foster (92 N
Hawes v. Fliegler (92 N
Heminway v. Miller (91
Hunt v. Grant (91 N. W
Hunt v. Roosen (91 N. W

Isherwood v. H. L. Je
(92 N. W. 230).....

Jacobs v. Cater (92 N. W
Jacobson v. Johnson (91
Johnson v. Martin (92 N
Jumiska v. Andrews (92

Kreuzer v. Great Nortl
W. 27) .....
Kronschnabel-Smith Co
(91 N. W. 892).....

Lauritsen v. American
W. 475) .....
Laury v. Evans (92 N.
Lenz v. St. Paul (91 N.
Lind v. Scott (91 N. W
Lind v. Scott (92 N. W
Ljungberg v. North M
401) .....

McCarthy v. Weare Con
W. 33).....
McLaughlin v. Betcher
Magoffin v. Mutual R
Ass'n (91 N. W. 1115
Martin v. Courtney (91
Miller v. Ganser (92 N.
Moore v. Cloquet Lumb
1104) .....
Moore v. Dispatch Print
396) .....

Ness v. Minnesota & C
W. 333) .....
Nielsen v. Albert Lea (9
Northern Pac. R. Co. v.
271) .....
Northness v. Hillestad (

Digitized by Google

Olson v. Berg (91 N. W. 1103) 277
Orth v. Belgrade (91 N. W. 843) 237

Peach v. Reed (92 N. W. 229) 375
Plano Mfg. Co. v. Klatt (91 N. W. 22) 27
Potter v. Holmes (92 N. W. 411) 477

Rahm v. Newton (92 N. W. 408) 415
Rice v. Madelia Farmers' Warehouse Co. (92 N. W. 225) 398
Robbins v. Blanding (91 N. W. 844) 246
Rutherford v. Selover (92 N. W. 413) 495

St. Paul, M. & M. R. Co. v. Olson (91 N. W. 294) 117
Scheiber v. Von Arx (92 N. W. 3) 298
Schmitt v. Murray (91 N. W. 1116) 250
Security Land & Exploration Co. v. Burns (91 N. W. 304) 97
Security Land & Exploration Co. v. Weckey (91 N. W. 304) 97
Simonds v. Minneapolis & St. L. R. Co. (92 N. W. 409) 408
Snell v. Minneapolis, St. P. & S. S. M. R. Co. (91 N. W. 1108) 253
Stai v. Selden (92 N. W. 6) 271
State v. Babcock (91 N. W. 842) 234
State v. Dennis (92 N. W. 1131) 407
State v. O'Brien (91 N. W. 297) 161
State v. Salverson (91 N. W. 1) 40
State v. Story (91 N. W. 26) 5
State v. Trustees of Macalester College (91 N. W. 484) 165
State ex rel. Ames v. City Council of City of Minneapolis (91 N. W. 298) 156
State ex rel. Barber Asphalt Pav. Co. v. McCardy (91 N. W. 263) 88
State ex rel. Corser v. Scott (91 N. W. 1101) 313
State ex rel. Douglas v. Savings Bank of St. Paul (92 N. W. 403) 473
State ex rel. Frye v. Bazille (92 N. W. 415) 500
State ex rel. Gulden v. Johnson (91 N. W. 604, 840) 221
State ex rel. Jennison v. Rogers (91 N. W. 430) 130

State ex rel. McCarthy v. Moore (92 N. W. 4) 308
State ex rel. Minnesota Loan & Trust Co. v. Ames (91 N. W. 18) 23
State ex rel. Railroad & Warehouse Commission v. Minneapolis & St. L. R. Co. (91 N. W. 465) 195
State ex rel. Ryan v. District Court of Ramsey County (91 N. W. 300) 146
State ex rel. Turnblad v. District Court of Hennepin County (91 N. W. 1111) 268
State ex rel. Utick v. Board of Com'rs of Polk County (92 N. W. 216) 325

Taylor v. Fanning (91 N. W. 269) 52
Tharaldson v. Everts (91 N. W. 467) 168
Thomas v. Murphy (91 N. W. 1097) 358
Thompson v. Berlin (91 N. W. 25) 7
Town of Birch Cooley v. National Bank of Minneapolis (96 N. W. 1133) 494
Township of Canosia v. Grand Lake (92 N. W. 215) 347
Truelsen v. Hugo (91 N. W. 434) 139

United States Fidelity & Guaranty Co. v. Siegmann (91 N. W. 473) 175

Walker v. Martin (92 N. W. 336) 489
Walton v. Commonwealth Title Insurance & Trust Co. (91 N. W. 1125) 183
Watier v. Buth (91 N. W. 756; 92 N. W. 331) 205
Weller v. Minnesota Land & Colonization Co. (91 N. W. 891) 227
Wells v. Moses (92 N. W. 334) 432
Wendt v. Board of Sup'rs of Town of Minnetrista (92 N. W. 404) 403
Wheeler v. Board of Com'rs of Hennepin County (91 N. W. 890) 243
Widstrand v. Widstrand (91 N. W. 432) .. 136
Wimmer v. Key (92 N. W. 228) 402

Yoki v. First State Bank of Detroit (91 N. W. 1101) 295

Digitized by Google

N. D. Rep.	N. W. Rep.		N. D. Rep.	N. W. Rep.		N. D. Rep.	N. W. Rep.		N. D. Rep.	N. W. Rep.		N. D. Rep.	N. W. Rep.	
Pg.	Vol.	Pg.	Pg.	Vol.	Pg.	Pg.	Vol.	Pg.	Pg.	Vol.	Pg.	Pg.	Vol.	Pg.
1	88	721	93	90	129	198	91	39	274	91	75	374	92	452
10	88	724	107	90	260	203	91	42	280	91	436	376	92	453
22	88	729	113	90	262	208	91	44	289	91	441	382	92	456
31	88	734	120	90	265	212	91	46	300	91	692	386	92	480
38	88	1042	136	90	564	221	91	51	306	91	943	391	92	482
45	89	855	148	90	483	233	91	56	309	91	944	399	92	487
55	88	1037	157	90	795	238	91	59	320	91	950	404	92	797
65	88	1033	164	90	799	249	91	63	329	91	955	407	92	798
73	88	1030	175	90	804	256	91	67	342	91	962	410	92	800
79	88	1029	181	90	807	257	91	67	347	92	381	420	92	805
81	88	1026	190	91	35	262	91	70	356	92	385	423	92	807
86	88	1023	193	91	37	265	91	72	369	92	449	428	92	809
92	88	1022												

VOL. 11, NORTH DAKOTA REPOR

Page

Adair v. Adair (90 N. W. 804) 175
Amundson v. Wilson (91 N. W. 37) 193
Anderson v. Cass County Drain Com'rs (92 N. W. 1133) 519
Anderson v. Cass County Drain Com'rs (92 N. W. 1133) 520
Angell v. Cass County (91 N. W. 72) 265
Arnett v. Smith (88 N. W. 1037) 55

Brandrup v. Britten (92 N. W. 453) 376
Buchols v. Leadbetter (92 N. W. 830) ... 473

Case Threshing Mach. Co. v. Ebbighausen (92 N. W. 826) 466
Cass County v. American Exch. State Bank (91 N. W. 59) 238
City of Fargo v. Keeney (92 N. W. 836) . 484
City of Fargo v. Ross (92 N. W. 449) ... 369
Clapp v. Tower (93 N. W. 862) 556
Clopton v. Clopton (91 N. W. 46) 212
Crane v. Odegard (91 N. W. 962) 342

Dalrymple v. Security Imp. Co. (88 N. W. 1033) 65
Deacon v. Mattison (91 N. W. 35) 190
Dickson v. Dows (92 N. W. 797) 404
Dickson v. Dows (92 N. W. 798) 407
Donovan v. Allert (91 N. W. 441) 289
Donovan v. Welch (90 N. W. 262) 113
Drinkall v. Movius State Bank (88 N. W. 724) 10
Duluth Elevator Co., In re (90 N. W. 12) 534
Duluth Elevator Co. v. White (90 N. W. 12) 534

Eaton v. Guarantee Co. (88 N. W. 1029) 79
Eldridge v. Knight (93 N. W. 860) 552
Ely v. Rosholt (93 N. W. 864) 559
Erickson v. Cass County (92 N. W. 841) .. 494

Finlayson v. Peterson (89 N. W. 855) ... 45
First Nat. Bank of Fargo v. Minneapolis & N. Elevator Co. (91 N. W. 436) 280
Fleischer v. Fleischer (91 N. W. 51) 221
Forman v. Healey (93 N. W. 866) 563
Freeman v. Wood (88 N. W. 721) 1
Freerks, In re (90 N. W. 265) 120

Gaar, Scott & Co. v. Sorum (90 N. W. 799) 164
Gagnier v. Fargo (88 N. W. 1030) 73
Garland v. Foster County State Bank (92 N. W. 452) 374
Glaspell v. Jamestown (88 N. W. 1023) .. 86

Hagman v. Cass County Drain Com'rs (92 N. W. 1133) 520

International Soc. v. Hildreth (91 N. W. 70) 262

J. B. Streeter, Jr., C
N. W. 692) .....
J. I. Case Threshing
hausen (92 N. W.

Kneeland v. Beare (91

Little v. Braun (92 N
Little v. Worner (92 1

McClory v. Ricks (88
McMillan v. Conat (91
Mahon v. Leech (90 N
Minneapolis, St. P. &
Dickey County (90 N
Monson v. Cass County
N. W. 1133) .....
Morton v. Cass County

Nokken v. Avery Mfg.

Olmstead, In re (91 N

Pengilly v. J. I. Case T
(91 N. W. 63) ....
Percy v. Cass County I
W. 1133) .....
Perry v. Hackney (90
Peterson v. Cass Count
N. W. 1134) .....
Peterson v. Cass Count
N. W. 1134) .....
Potter v. Cass County
N. W. 1134) .....
Prescott v. Brooks (90

Red River Valley Nat.
Monson (92 N. W.
Richmire v. Andrews &
(92 N. W. 819) ....
Ross v. Page (92 N. V

Safe v. Cass County D
W. 1134) .....
Simpson, In re (93 N.
Standard Sewing Mach
N. W. 805) .....
State v. Barry (92 N.
State v. Thoemke (92
State ex rel. Buttz v.
950) .....
State ex rel. Byrne v.
955) .....
State ex rel. Clyde v.
564) .....
State ex rel. Granvold
944) .....
State ex rel. Walker
(92 N. W. 385) ...

Digitized by Google

Page

State ex rel. Wiles v. Albright (88 N. W. 729) 22
State ex rel. Wiles v. Heinrich (88 N. W. 734) 31
Streeter, Jr., Co. v. Fredrickson (91 N. W. 692) 300

Talbot v. Boyd (88 N. W. 1026) 81
Thompson v. Armstrong (91 N. W. 39) 198
Thompson v. Cass County Drain Com'rs (92 N. W. 1134) 525
Thompson v. Thompson (91 N. W. 44) 208
Thompson v. Travelers' Ins. Co. (91 N. W. 75) 274
Torreson v. Walla (92 N. W. 834) 481

Page

Turnquist v. Cass County Drain Com'rs (92 N. W. 852) 514

Ueland v. Dealy (89 N. W. 325) 529
Ulmer v. McDonnell (92 N. W. 482) 391

Voss, In re (90 N. W. 15) 540

Wheeler v. Castor (92 N. W. 381) 347
Wilson v. Kartes (88 N. W. 1023) 92
Wisner v. Field (91 N. W. 67) 257
Witte Mfg. Co. v. Reilly (91 N. W. 42) 203
Woodhull v. Farmers' Trust Co. (90 N. W. 795) 157

Google

Page

S. D. Seavey Co. v. Campbell (91 N. W. 655) 603
Seavey Co. v. Campbell (91 N. W. 655).... 603
Shaft v. Carey (90 N. W. 427)..... 155
Shepherd v. Morton-Edgar Lumber Co. (92 N. W. 260)..... 522
Starry v. State (90 N. W. 1014)..... 50
State ex rel. Ashland Water Co. v. Wharton (91 N. W. 976)..... 457
State ex rel. Blodgett v. Eagan (91 N. W. 984) 417
State ex rel. Carpenter v. Mathys (91 N. W. 114) 31
State ex rel. City of Augusta v. Losby (90 N. W. 188)..... 57
State ex rel. City of Augusta v. Losby (90 N. W. 1135)..... 67
State ex rel. Jones v. Froehlich (91 N. W. 115) 32
State ex rel. Kelleher v. Fordyce (92 N. W. 430) 608
Steber v. Chicago & N. W. R. Co. (91 N. W. 654) 200
Stoll v. Mutual Ben. Life Ins. Co. (92 N. W. 277) 558
Stuart's Will, In re (91 N. W. 688)..... 294

Uncas Nat. Bank v. Superior (91 N. W. 1004) 340

Van Hessen v. Chippewa Val. Mercantile Co. (91 N. W. 1008)..... 443

Wallman v. R. Connor Co. (92 N. W. 374) 617
Wanner v. Wanner (91 N. W. 671)..... 196
Williams v. Fethers (91 N. W. 676)..... 314
Wisconsin Lakes Ice & Cartage Co. v. Pike & North Lakes Ice Co. (91 N. W. 988) 377
Wisconsin Tel. Co. v. Krueger (90 N. W. 458) 150
Wisconsin Yearly Meeting of Freewill Baptists v. Babler (91 N. W. 678)..... 289
Wolf v. Theresa Village Mut. Fire Ins. Co. (91 N. W. 1014)..... 402
Wunderlich v. Palatine Ins. Co. (92 N. W. 264) 509

WEST PUBLISHING CO., PRINTERS AND STEREOTYPERS, ST. PAUL, MINN.

Digitized by Google

Digitized by Google

Digitized by Google

Digitized by Google